Illinois Environmental Protection Agency

Bureau of Land • 1021 North Grand Avenue East • P.O. Box 19276 • Springfield • Illinois • 62794-9276

ILLINOIS EPA RCRA CORRECTIVE ACTION CERTIFICATION

This certification must accompany any document submitted to Illinois EPA in accordance with the corrective action requirements set forth in a facility's RCRA permit. The original and two copies of all documents submitted must be provided.

1.0 Facility Identification

Name: Equilon Enterprises LLC d/b/a/ Shell
County: Madison
Street Address: 900 South Central Ave
Site No. (IEPA): 1191150002
City: Roxana
Site No. (USEPA): ILD080 012 305

2.0 Owner Information

Name: Not Applicable
Mail Address:
City:
State: Zip Code:
Contact Name:
Contact Title:
Phone:

3.0 Operator Information

Name: Equilon Enterprises LLC d/b/a/ Shell
Mail Address: 128 East Center Street
City: Nazareth
State: PA Zip Code: 18064
Contact Name: Leroy Bealer
Contact Title: Senior Program Manager
Phone: 484-632-7955

4.0 Type of Submission (check applicable item and provide requested information, as applicable)

- ☐ RFI Phase I Workplan/Report
- ☐ RFI Phase II Workplan/Report
- ☒ CMP Report;
- ☐ Other (describe): Phase II of Corrective Measures Program

IEPA Permit Log No. B-43R
Date of Last IEPA Letter on Project: October 31, 2022
Log No. of Last IEPA Letter on Project: see section 6.0 below
Does this submittal include groundwater information: ☒ Yes ☐ No

Date of Submittal: December 16, 2022

5.0 Description of Submittal: (briefly describe what is being submitted and its purpose)

Old Public Works Yard Steam Enhanced Extraction Final Design Report & Construction Work Plan (FDRCWP) - Village of Roxana, Illinois.

6.0 Documents Submitted (identify all documents in submittal, including cover letter; give dates of all documents)

Response to comments cover letter, RCRA Corrective Action Certification, and FDRCWP dated 12/16/2022.

Copies of submittal sent electronically to V. Poornaka, A. Butler, R. Watson, and A. Al-Janabi of IEPA.

Log No. of Last IEPA Letter on Project: B-43R-M-2, B-43R-M-3, B-43R-M-5, B-43R-CA-49, B-43R-M-16 B-43R-M-31, B-43R-M-31, B-43R-M-33, B-43R-M-37, B-43R-M-40, B-43R-M-43, B-43R-M-45, and B-43R-M-49

7.0 Certification Statement

(This statement is part of the overall certification being provided by the owner/operator, professional and laboratory in Items 7.1, 7.2 and 7.3 below). The activities described in the subject submittals have been carried out in accordance with procedures approved by Illinois EPA. I certify under penalty of law that this document and all attachments were prepared under my direction or supervision in accordance with a system designed to assure that qualified personnel properly gather and evaluate the information submitted. Based on my inquiry of the person or persons who manage the system, or those persons directly responsible for gathering the information, the information submitted is, to the best of my knowledge and belief, true, accurate, and complete. I am aware that there are significant penalties for submitting false information, including the possibility of fine and imprisonment for knowing violations.

7.1 Owner/Operator Certification

(Must be completed for all submittals. Certification and signature requirements are set forth in 35 IAC 702.126.) All submittals pertaining to the corrective action requirements set forth in a RCRA Permit must be signed by the person designated below (or by a duly authorized representative of that person):

1. For a Corporation, by a principal executive officer of at least the level of vice president.
2. For a Partnership or Sole Proprietorship, by a general partner or the proprietor, respectively.
3. For a Governmental Entity, by either a principal executive officer or a ranking elected official.

A person is a duly authorized representative only if:

1. the authorization is made in writing by a person described above; and
2. the written authorization is provided with this submittal (a copy of a previously submitted authorization can be used).

Owner Signature: _____ Date: _____

Title: _____

Operator Signature: _____ Date: 12/12/2022

Title: **Senior Program Manager**

7.2 Professional Certification (if necessary)

Work carried out in this submittal or the regulations may also be subject to other laws governing professional services, such as the Illinois Professional Land Surveyor Act of 1989, the Professional Engineering Practice Act of 1989, the Professional Geologist Licensing Act, and the Structural Engineering Licensing Act of 1989. No one is relieved from compliance with these laws and the regulations adopted pursuant to these laws. All work that falls within the scope and definitions of these laws must be performed in compliance with them. The Illinois EPA may refer any discovered violation of these laws to the appropriate regulating authority.

Any person who knowingly makes a false, fictitious, or fraudulent material statement, orally or in writing, to the Illinois EPA commits a Class 4 felony. A second or subsequent offense after conviction is a Class 3 felony. (415 ILCS 5/44 (h))

Professional's Signature: _____ Date: 12/13/22

Professional's Name Wendy M. Pennington

Address 100 N. Broadway, 20th Floor

City St. Louis

State MO Zip Code 63102

Phone 314-429-0100

Professional's Seal:

LICENSED PROFESSIONAL ENGINEER
WENDY M. PENNINGTON
062.064098
expires 11/2023
STATE OF ILLINOIS

7.3 Laboratory Certification (if necessary)

The sample collection, handling, preservation, preparation and analysis efforts for which this laboratory was responsible were carried out in accordance with procedures approved by Illinois EPA.

Name of Laboratory NOT APPLICABLE

_____ Date: _____

Signature of Laboratory Responsible Officer

Mailing Address of Laboratory

Address _____

City _____

State _____ Zip Code _____

_____

Name and Title of Laboratory Responsible Officer

AECOM
100 N. Broadway,
20th Floor
St. Louis, MO 63102
www.aecom.com

314 429 0100 tel
314 429 0462 fax

December 16, 2022

Mr. Kenneth E. Smith, PE
Manager, Permit Section
Illinois Environmental Protection Agency
Division of Land Pollution Control
Bureau of Land
1021 North Grand Avenue East
Springfield, Illinois 62702

Old Public Works Yard Steam Enhanced Extraction – Response to 8/22/22 Letter and Final Design Report and Construction Work Plan
Roxana, Illinois
1191150002 – Madison County
Equilon Enterprises LLC d/b/a Shell Oil Products US
Log No. B-43R-CA-107

Dear Mr. Smith:

AECOM Technical Services, Inc. (AECOM), on behalf of Equilon Enterprises LLC d/b/a Shell Oil Products US (Shell), in fulfillment of Phase II of the Corrective Measures Program (CMP), is submitting this enclosed Final Design Report and Construction Work Plan (FDRCWP).

On August 22, 2022, Illinois EPA (IEPA) issued an approval with conditions response letter to the Public Works Yard (PWY) Steam Enhanced Extraction (SEE) Workplan. Below is a summary of the correspondences since the issuance of this letter:

- On September 6, 2022, AECOM emailed IEPA requesting an in-person meeting to discuss some of the conditions within the August 22nd response letter as well as an extension to the 30-day deadline presented in Condition 6 of the August 22nd letter.
- On September 8, 2022, IEPA responded via email with a proposed date and time for an in-person meeting as well as approving the requested extension for the 30-day deadline in Condition 6.
- On September 16, 2022, AECOM submitted a letter summarizing the extension requested and IEPA's approval email response.
- On September 21, 2022, an in-person meeting at IEPA offices in Springfield, IL was held with representatives from AECOM, Shell and the lead McMillan-McGee (Mc2) SEE system design engineer to discuss some of the conditions of the letter. The items discussed in the meeting are incorporated into this cover letter and enclosed FDRCWP.

Each condition from the IEPA's August 22, 2022, letter is provided below in *italics*, followed by the corresponding Shell response in regular font. Conditions from the August 22, 2022 letter are reprinted in full.

A copy of this submittal is being sent separately directly to Visal Poornaka, Amy Butler, Rob Watson, and Ali Al-Janabi with the IEPA.

IEPA Condition 1

In order to implement a successful Corrective Measures Program (CMP) during RCRA Corrective Action, Shell Oil Products US (SOPUS) must follow the process as described in attached document entitled "Illinois EPA Corrective Measures Program Requirements". With the subject workplan and addendum submittal, it has been determined Phase I of the CMP has been approved for the PWY SEE CMP, subject to the conditions of this letter.

Shell Response

The condition is acknowledged.

IEPA Condition 2

Within 90 days of the date of this letter, a Final Design Report and Construction Work Plan must be submitted to Illinois EPA for review and approval. This document needs to include the items listed in Section 4.0 of the attached Illinois EPACMP document and the following specific items included in Conditions below. Any required attachments must also be provided with the new workplan.

Shell Response

The condition is acknowledged. Shell has prepared the enclosed Final Design Report and Construction Work Plan (FDRCWP) in accordance with Section 4.0 of the Illinois EPA CMP Requirements and including specific items listed in the August 22, 2022 letter and/or discussed during the September 21, 2022 meeting. A request for extension was submitted October 14, 2022, which requested that the deadline for FDRCWP submittal be extended to December 20, 2022.

IEPA Condition 3

A scaled site layout map detailing the soil, soil gas and groundwater sampling locations, that would be conducted during SEE operations and post-shutdown of SEE must be provided in the workplan required in Condition 2.

Shell Response

The condition is acknowledged. Scaled site layout maps are provided in the enclosed FDRCWP (see **Figures 6, 7 and 8**).

IEPA Condition 4.a

With regards to the SEE shutdown criteria (Criteria 1 through 4) as described in Section 4.6 of the subject workplan, the following conditions and modifications must be met. Additional information regarding these shutdown criteria were provided by the facility during a technical meeting Illinois EPA and SOPUS on April 27, 2022, and summarized in an email on May 4, 2022, which has been incorporated below.

A revised shutdown criteria to reflect below listed requirements and additional clarifications and/or information listed in Conditions 4.b through 4.g must be included in the workplan required in Condition 2 above for Illinois EPA review and approval:

a. SEE shutdown cannot occur until:

i. The target soil temperature of 80.2"C is met; and

ii. Both Shutdown Criteria 1 and Shutdown Criteria 2 are met; or
iii. The revised Shutdown Criteria 4 required in Condition 4.f below is met.

Shell Response

The condition is acknowledged. Shell acknowledges that there are two scenarios in which SEE may cease:

- Minimum target soil temperature of 80.2°C (Condition 4.a.i) is met AND Shutdown Criteria 1 and 2 are met (Conditions 4.b and 4.c)
  OR
- Minimum target soil temperature of 80.2°C (Condition 4.a.i) is met AND Shutdown Criteria 4 is met (Condition 4.f)

IEPA Condition 4.b

Shutdown Criteria Item 1: Regarding the "peak" in Criteria 1, the mass recovery curve based on system monitoring/sampling is one method of tracking recovery rates and finding the point of diminishing returns, which is typically on the order of 10% of the peak. This criteria is related to determining when the system has reached diminishing returns, meaning that the SEE technology has done what it can.

Shell Response

The condition is acknowledged.

IEPA Condition 4.c

Shutdown Criteria Item 2: The linear mass recovery rate is looked at via statistical trend data. The list of potential statistical trend analyses is not identified and must be described in detail. This criteria is also related to determining when the system has reached diminishing returns.

Shell Response

The condition is acknowledged. Mann-Kendall analysis will be used to evaluate the mass recovery rate and is described further in **Attachment I** of the enclosed FDRCWP.

IEPA Conditions 4.d and 4.e

d. Shutdown Criteria Item 3: The intent for Criteria Item 3 is to ensure that the entire formation within the target treatment zones gets up to the necessary temperature and operates long enough for the SEE to perform as intended. MC2 stated that the required 135 days of operation after target temperature is reached was determined from the energy balances and was an estimate of how long the proposed system would require to remove the mass.

Past completed SEE projects have shown that mass recovered during operations sometimes exceeded the initial estimated mass. Therefore, Illinois EPA cannot approve the proposed shutdown criteria 3.

e. As stated in the May 4, 2022, email, the intent of the "or" for Criteria Item 3 was to prevent the proposed Shell SEE system from operating after removing the benzene mass it was designed for if continued mass recovery is observed related to the Buckeye release. However, there is contamination present beyond the PWY boundaries to the north, northeast, east, and southeast. Contaminant concentrations to the south are

not necessarily greater than those in other directions, and this alone cannot govern the shutdown of the system.

Shell Response

These conditions are acknowledged. 135 days of SEE operation will not be used as a shutdown criterion. The SEE system is designed to target residual material sorbed to saturated soils, which are present inside the boundaries of the PWY. Other phases and locations of contamination will be evaluated and managed separately, if necessary.

IEPA Condition 4.f

Shutdown Criteria Item 4: The facility states the TTZs are based on a site-specific value for soil saturation limits (Csat). However, SOPUS cannot use an unapproved site-specific Csat value. While the residential value of 580 mg/kg applies to residential designations for soil, the saturated zone is subject to meet the groundwater objectives for Class I groundwater and any other groundwater-related exposure route values. Revise Criteria 4 to indicate that if the groundwater objectives for Class I groundwater and any other groundwater-related exposure route values are met within the entire dissolved plume, then the SEE may be shutdown based on that sole criteria.

Shell Response

The condition is acknowledged. The intent of calculating the site-specific benzene Csat of 726 mg/kg was to determine where residual sorbed material was located (i.e. area(s) where VOCs are sorbed to saturated soils, including VOCs as NAPL) within the PWY so that those areas could be targeted and included within the treatment footprint. Upon receipt of the August 22, 2022 letter, Shell performed modeling using the established residential benzene Csat of 580 mg/kg to determine the SEE TTZs and found that target areas were similar to those that resulted from modeling with the site-specific Csat. The results indicated that no alterations to the TTZs presented in the January 31, 2022 Public Works Yard Steam Enhanced Extraction Workplan would be needed, because the TTZ footprint presented in the workplan was conservative enough to encompass target areas based on the residential Csat of 580 mg/kg. These modeling results using the residential Csat are presented in **Figures 3 and 4**. The residential benzene Csat of 580 mg/kg was used for the SEE system design presented in this FDRCWP.

If Class 1 groundwater objectives and other groundwater-related exposure route values are met within the entire dissolved plume within the bounds of the PWY, the SEE system will be shutdown based on that sole criterion.

IEPA Condition 4.g

Figure(s) must be provided to visually present the diminishing returns in Criteria 1 and 2.

Shell Response

The condition is acknowledged. Mass removal plots will be included in the Monthly CMP Progress Reports, per Condition 15. The diminishing returns in Criteria 1 and 2 will be presented visually in the Post SEE Shutdown and Completion Report.

IEPA Condition 5

The Illinois EPA concurs with the use of SEE at the PWY; however, Illinois EPA disagrees with the treatment range. The current remedial approach intends to limit the scope of the SEE to only a portion of the water column; however, the full extent of the plume within the Village must be addressed. As stated in previous letters, the remedial objectives at the PWY must meet residential standards. Treatment zones must be expanded to encompass the full dissolved plume at the PWY.

The full extent of the treatment zone is considered to be within 3 feet of the water table, and extending vertically and horizontally within 3 feet of the Class I Groundwater Quality Standards (GQSs) being met. The 3-foot variance is acceptable due to this being the variance for the SEE method as defined in Attachment B to the subject submittal; "the heated area is defined as the area that extends 3 feet (ft) beyond the perimeter steam injection well locations." Again, once SOPUS is sampling below the water table within the saturated zone, the groundwater limits apply. The Csat in saturated soil can be a screening tool, but the groundwater remediation objectives to meet the requirements of 35 Ill. Adm. Code Part 742 and Part 620 must be met for the groundwater in the saturated zone.

Shell Response

The condition is acknowledged. Shell would like to clarify the purpose of the SEE system: the SEE system will target residual material sorbed to saturated soils, including VOCs as NAPL. Sorbed residual material in the subsurface feeds dissolved phase impacts in groundwater. The SEE system is intended to remediate this sorbed residual material. After the sorbed residuals are remediated and SEE ceases, the existing refinery groundwater control system will continue to address dissolved phase impacts while maintaining hydraulic gradient eastward toward the refinery interior, in accordance with RCRA Part B Post-Closure Hazardous Waste Permit B-43R (Part B Permit), Section IV. Shell would also like to note that the refinery groundwater control system will remain operating during and after SEE operations.

During the September 21, 2022 meeting, the Mc2 lead SEE system design engineer detailed to meeting attendees how SEE technology is meant to target and remove residual material (VOCs sorbed to soil, including NAPL) in a saturated environment. Treatment of captured dissolved phase contamination will occur during the process, but it is not the primary objective. Mc2 has implemented SEE systems at sites with similar characteristics (sites where adjacent groundwater pump and treat systems are in operation), indicating that SEE is meant to act as a catalyst in the overall remediation of a site.

Following completion of SEE system operations, the refinery groundwater control system will continue addressing any remaining dissolved phase impacts in the PWY.

IEPA Condition 6

Any additional data required to develop the Final Design Report and Construction Work Plan must be collected within 30 days of the date of this letter.

Shell Response

On September 16, 2022, AECOM submitted a letter summarizing an extension requested for this condition via email and IEPA's email response approving the extension. As discussed in the September 21, 2022 meeting, additional investigation is not proposed prior to submitting the FDRCWP. Additional investigations will be performed during construction/installation of the SEE system and/or during post-SEE activities. The results of those investigations will be included in the applicable corresponding report.

IEPA Condition 7

In addition to the proposed sampling locations from specific sample depths based on the 2019 Predesign Investigation, found in Table 1 and Table 2 of Attachment A of the subject submittal, the following must be addressed and incorporated into the Final Design Report:

i. Include the multi-phase extraction (MPE) wells locations to be sampled for groundwater in Areas A and B.

ii. Soil borings sampling during the installation of MW-8A, MW-8B, MW-29A, and MW-29B must be continuously logged and sampled. Stainless steel well materials are required as these will be permanent monitoring wells.

Shell Response

The condition is acknowledged. Groundwater at selected MPE wells will be sampled during SEE installation and post SEE shutdown. The selected MPE wells are listed in the FDRCWP and depicted on **Figures 6 and 7**. MW-8A, MW-8B, MW-29A, and MW-29B will be continuously logged and sampled, and stainless-steel well materials will be used. These wells will be installed after SEE operation is complete and subsurface temperatures have cooled to ambient conditions.

IEPA Condition 7.a

Provide the results for groundwater profiling (GWP) locations GP-15, GP-16, GP-17, and GP-18, and evaluate results of samples in comparison to what was observed at more recent investigation locations.

Shell Response

The condition is acknowledged. GP-15, GP-16, GP-17, and GP-18 were GeoProbe® borings that were drilled in December 2012 and January 2013 (AECOM, 2017). Soil samples were collected, but groundwater profiling was not performed. Soil sample results from GP-15, GP-16, GP-17, and GP-18 are provided in **Attachment G**.

IEPA Condition 7.b

At this time, the groundwater objective for 1-methylnaphthalene is 0.49 mg/L for a Class I groundwater. With regards to the indoor air pathway evaluation, there is no toxicology data; therefore, the Csat value of 530 mg/kg, and the groundwater solubility of 26 mg/L is applicable.

Shell Response

The condition is acknowledged.

IEPA Condition 7.c

The vertical extent of groundwater contamination at sampling locations PD-03, PD- 07 and PD-17 must be delineated. The field sampling was ended prematurely.

According to Table 6 of Attachment A, the following benzene concentrations were reported: PD-3 was 1,200 mg/L at 71 ft bgs; PD-7 was 1,400 mg/L at 55 ft bgs; and PD-17 was 2,200 mg/L at 50 ft bgs when

groundwater sampling stopped at the respective borings. New borings should be installed adjacent to these locations and benzene concentration in groundwater delineated vertically until the appropriate standards are met.

Shell Response

The condition is acknowledged. Groundwater profiling at PD-03, PD-07, and PD-17 was halted at 71 ft, 55 ft, and 50 ft below ground surface (bgs), respectively. The decision was made to halt at each location because the force required to continue advancing would have exceeded the safe operational limit of the cone penetrometer test (CPT) rig and would have damaged the equipment.

Additional groundwater profiling near PD-03, PD-07 and PD-17 will be conducted during installation activities of the SEE system and steam vapor points (SVPs)(see **Figure 6**). Profiling will be performed in the SVP boring nearest to PD-03, and in the steam injection/extraction boring nearest to PD-07. Profiling will be performed in a boring to be located approximately halfway between PD-06 and PD-17 (see Shell responses to Conditions 7.g and 7.h). Results from the additional groundwater profiling will be included with the SEE Construction Completion Report.

IEPA Condition 7.d

Attachment A, Figure 2: The underground water line depicted on Figure 2, has the potential to be a preferential pathway for vapors. The location and elevation of any underground lines along Eighth Street must be provided, and a demonstration provided on how these are not a concern or how they will be addressed.

Shell Response

The condition is acknowledged. The locations of underground utilities in the vicinity of the PWY SEE system are depicted in **Figure 8** of the FDRCWP. The vertical distance from any steam injection point to an underground utility is at least 25 ft or greater. As an additional safety measure, the radius of capture of the MPE wells is 70 ft and covers the areas in which underground lines are located (see **Figure 8** in the FDRCWP). The primary row of SVPs will be located near the underground lines, allowing for vapor monitoring adjacent to those lines.

IEPA Condition 7.e

Attachment A, Figure 5.B: There is a typo on cross-section C-C'. Boring PD-08 is listed twice. It appears the point closest to GP-16A, should be labeled PD-09.

Shell Response

The condition is acknowledged. The corrected figure is included as **Attachment J**.

IEPA Condition 7.f

Attachment A, Appendix F: Regarding the hydraulic conductivity tests performed by laboratory analysis, the result must be increased by 2 orders of magnitude. For example, if the ex-situ K value = 3.0E-05 cm/second, 2 orders of magnitude increase = 3.0E-03 cm/second.

Shell Response

The condition is acknowledged. The hydraulic conductivity test results provided in Workplan Attachment A, Appendix F are test results as provided by the laboratory (TerraSense, LLC), and were not calculated nor modified by AECOM or Shell. Condition 7.f was discussed in the September 21, 2022 meeting. Using the laboratory results for hydraulic conductivity as provided yielded a more conservative SEE system design; therefore, no change to the hydraulic conductivity used is proposed at this time.

IEPA Condition 7.g

Attachment A, Appendix H: No groundwater samples were collected at PD-06, PD-10, PD-15, or PD-16. However, PD-06-, PD-09, and PD-16 had a dyeLIF response. Therefore, new samples must be collected for groundwater delineation at PD-06, PD-09, and PD-16.

Shell Response

The condition is acknowledged. Additional groundwater profiling near PD-06 will be conducted during installation of the SEE system. Profiling will be performed in a boring to be located approximately halfway between PD-06 and PD-17, as mentioned in response to Condition 7.c (see **Figure 6**). Results from the additional groundwater profiling will be included with the SEE Construction Completion Report.

Groundwater profiling was performed at PD-09 down to 80 ft bgs during the 2019 Predesign Investigation, and results (0.025 mg/L benzene) were included in Attachment A - Tables 3 and 4, and Figure 9 of the PWY SEE Workplan. Therefore, additional groundwater profiling at PD-09 is not necessary.

Groundwater profiling was performed down to 80 ft bgs at three locations surrounding PD-16 during the 2019 Predesign Investigation (PD-05 [0.18 mg/L benzene], PD-08 [0.27 mg/L benzene], and PD-09 [0.025 mg/L benzene]), and results were included in Attachment A - Tables 3 and 4, and Figure 9 of the PWY SEE Workplan. Furthermore, PD-16 is within the footprint of the TTZ (Area A) and will be remediated by the SEE system. Therefore, additional groundwater profiling at PD-16 is not proposed at this time.

IEPA Condition 7.h

The separation between Areas A and B appears to have more to do with the location of the wastewater treatment plant footprint at the PWY. The Illinois EPA considers the subsurface region between Areas A and B to have high potential for contamination at similar concentrations. However, the proposed SEE treatment does not appear to be targeted at remediating this portion of the Village property. Modeling presented in Figures 10 and 11 of Attachment A, also estimates that the contamination extends between Areas A and B. Propose the necessary revisions to ensure all subsurface contamination is adequately addressed.

Shell Response

The condition is acknowledged. As stated in the response to Condition 5, the purpose of the SEE system is to target residual material sorbed to saturated soils, including VOCs as NAPL; this residual material feeds dissolved phase impacts in groundwater. Modeling of dissolved phase impacts extends into the old wastewater treatment plant footprint; however, modeling of sorbed residuals (using a Csat of 580 mg/kg as discussed in the response to Condition 4.f) does not (see **Figures 3 and 4**). Revisions to the TTZs are not proposed at this time.

To confirm modeling results, two borings will be drilled and soil sampled near the wastewater treatment plant – one boring on the north side of the basins and one boring on the south side of the basins. The approximate location of the borings can be seen on **Figure 6** in the enclosed FDRCWP.

After the residual zones are remediated and SEE operation is completed, the remaining dissolved phase impacts will be addressed by the refinery groundwater control system, which will operate continuously during and after SEE operation. Post-SEE system effectiveness sampling will help to further the evaluation of dissolved phase impacts after SEE operation.

IEPA Condition 7.i (second time "i" appears under Condition 7)

Attachment B, Appendix A: Figure WFL-01 provides the well field layout for Areas A and B. It shows the equipment staging area is directly above an area of concern that needs to be included in the remediation project. Therefore, equipment must be staged in a different area if this is preventing SOPUS from treating this area.

Shell Response

The condition is acknowledged. As stated in the response to Conditions 5 and 7.h, the purpose of the SEE system is to target residual material sorbed to saturated soils, including VOCs as NAPL; this residual material feeds dissolved phase impacts in groundwater. Modeling of dissolved phase impacts extends beneath the equipment staging area; however, modeling of sorbed residuals does not. Soil analytical results obtained from PD-06 and PD-17 (located within the proposed SEE equipment staging area) do not indicate residual sorbed material is present. As stated in the response to Condition 7.g, additional groundwater profiling will be performed in the equipment staging area in a boring to be located approximately halfway between PD-06 and PD-17. Relocation of the equipment staging area is not proposed at this time.

After the residual zones are remediated and SEE operation is completed, the remaining dissolved phase impacts will be addressed by the refinery groundwater control system, which will operate continuously during and after SEE operation. Post-SEE system effectiveness sampling will help to further the evaluation of dissolved phase impacts after SEE operation.

IEPA Condition 7.j

If the SEE system does not achieve the appropriate standards, SOPUS must include provisions for a transition to continuous groundwater pumping and vapor removal in the new Workplan. The revised report must describe how the potential transition will be completed.

Shell Response

The condition is acknowledged. In accordance with Section IV of the Part B Permit, the Wood River Refinery operates a continuous groundwater pumping (control) system that maintains a constant pumping rate of at least 3000 gallons per minute (gpm). A portion of this groundwater pumping system operates immediately east of the PWY. The refinery pumping system is responsible for maintaining hydraulic control over the PWY groundwater dissolved phase plume, and is steadily pulling the plume eastward into the refinery (as shown in the quarterly Roxana Interim Groundwater Monitoring Reports and **Figure 10**). The refinery's groundwater pumping system will operate during SEE operation and will continue to operate after the SEE system is shut down, addressing any remaining dissolved phase impacts.

In accordance with Condition 19, vapor extraction from MPE wells will continue for at least 30 days following shut down of steam injection. After the 30-day period, existing SVE wells in the PWY can be utilized for vapor extraction, if necessary, based on post-SEE sampling results. Existing SVE wells in the PWY will be closed, but will remain in place and connected to the SVE System during SEE operation (see **Figure 5** in the FDRCWP). Please note that the existing SVE system will continue vapor extraction along the West Fenceline during and after SEE operation.

IEPA Condition 7.k

O & M Plan: The facility must submit the O & M plan within the report required by Condition 2 above.

Shell Response

The condition is acknowledged. The SEE O&M Plan is included with this FDRCWP as **Attachment A**.

IEPA Condition 7.l

Health and Safety Plan: The facility must submit the Health and Safety Plan within the report required by Condition 2 above.

Shell Response

The condition is acknowledged. The SEE Health & Safety Plan is included with this FDRCWP as **Attachment B**.

IEPA Condition 7.m

Sampling locations must be installed adjacent to MW-4 and MW-25 and samples must be collected at multiple intervals as was conducted at the PWY. Sampling must continue vertically until levels no longer exceed the benzene Class I GQS of 0.005 mg/L. The requirements for additional sampling on Eighth Street may serve to meet this requirement if sampling locations align.

Shell Response

The condition is acknowledged. Additional groundwater profiling near MW-25 will be conducted during installation of the SVPs along Eighth Street. Profiling will be performed in the SVP boring nearest to MW-25. The results from this groundwater profiling location will be evaluated and used to determine if additional profiling will be performed near MW-4 as a step-out location.

Please note that quarterly groundwater benzene results at MW-4 have consistently been below Class I GQS of 0.005 mg/L since 2nd Quarter 2016. Soil vapor benzene results at VMP-8 (located immediately adjacent to MW-4) have been below TACO Tier 1 residential criterion of 0.37 mg/m^3 since 3rd Quarter 2011.

IEPA Conditions 8.a – 8.d

The sampling procedure for the steam vapor monitoring points (SVP) once operations commence must be revised to address the following comments.

> *a. Primary SVP row must be sampled using stainless steel canisters and Modified USEPA Total Organic-15 (TO-15) method at least once a week after the TTZ reaches half the targeted*

temperature. Illinois EPA acknowledges that there's potential for increase in vapor concentration at the primary SVP due to it being in close proximity to the TTZ, but with residential homes in such close proximity, all effort must be taken to avoid an exposure.

b. All primary SVP must also be field screened with Tedlar© bags following the provided sampling frequency.

c. Secondary SVP row must be screened for an increase from baselines established following the program frequency outlined in Section 6.

d. If the secondary screening tests shows elevated field screening results, SOPUS must then conduct daily testing at both the primary and secondary locations until such times the results falls at or below the baseline obtained following any adjustments to the SEE system. Additionally, modified USEPA TO-15 method must be used to collect samples at each secondary vapor monitoring points to be sent out laboratory testing once the results reach baseline again after an increase for confirmation.

If an elevation from the baseline results are noted at any of the monitoring points in the primary and/or secondary SVP rows following commencement of SEE, necessary adjustments to the SEE system must be made immediately to bring the results back to baseline values.

Shell Response

The conditions are acknowledged. It is presumed that the request for canister sampling is as confirmatory sampling for the field screening results from Tedlar® bags. Canister samples would be sent to an analytical laboratory (Eurofins Air Toxics) in California with a standard turnaround time of 10 business days. This time delay is prohibitive of exposure monitoring and avoidance.

The field screening results from Tedlar® bags can detect total hydrocarbon concentration (THC) and methane at a resolution of one part per 10 million using a flame ionization detector (FID). Petroleum hydrocarbon concentration (PHC) is calculated by subtracting the methane result from the THC result.

Shell proposes the following modifications to the SVP monitoring plan described by IEPA in Conditions 8.a – 8.d:

- Prior to SEE operation, primary and secondary row SVPs will be sampled using stainless steel canisters and Modified USEPA TO-15 method, and co-collected Tedlar© bag samples for field screening. Results from these samples will determine baseline soil vapor concentrations at each SVP.
- The primary SVP row (SVPs 01 through 07) will be sampled using stainless steel canisters and Modified USEPA TO-15 method, and co-collected Tedlar© bag samples for field screening, at the following milestones:
    - When the target treatment zone (TTZ) reaches half the targeted temperature
    - When the TTZ reaches the targeted temperature
    - Once per month after TTZ reaches the target temperature until steam injection ceases.

- At primary row SVPs, if routine field screened Tedlar© bag PHC results exceed baseline field screening results by 5% or greater (as measured using FID), a confirmation Tedlar© bag sample will be collected. An increase of 10 ppmv PHC will be the minimum increase required to trigger a confirmation sample in the primary row.

    - If PHC results of the primary row confirmation sample exceed baseline field screening results by 5% or greater (as measured using FID), a stainless steel canister TO-15 sample(s) will be collected at that SVP. An increase of 10 ppmv PHC will be the minimum increase required to trigger a TO-15 sample in the primary row.
- At secondary row SVPs, if routine field screened Tedlar© bag PHC results exceed baseline field screening results by 5% or greater (as measured using FID), a confirmation Tedlar© bag sample will be collected. An increase of 1 ppmv PHC will be the minimum increase required to trigger a confirmation sample in the secondary row.
    - If PHC results of the secondary row confirmation sample exceed baseline field screening results by 5% or greater (as measured using FID), a stainless steel canister TO-15 sample(s) will be collected at that SVP. An increase of 1 ppmv PHC will be the minimum increase required to trigger a TO-15 sample in the secondary row.
- Triggered TO-15 samples will be limited to one per week per SVP.
- Adjustments to SEE system may be made if TO-15 results in exceedance of the soil vapor values in 35 Illinois Administrative Code (IAC) Part 742, Appendix B, Table H (IEPA, 2013) are observed in the secondary SVP row; not the primary row.
- TO-15 canister samples will not be collected from SVPs after steam injection ceases. At that point Tedlar© bag sample collection will continue in accordance with Condition 9.

The modified SVP monitoring plan is included in **Section 5** of the FDRCWP.

IEPA Conditions 9.a – 9.e

The proposed sampling for SVPs following shutdown of SEE in Section 6 of the subject submittal cannot be approved and must be revised to indicate samples will be taken at the following frequency:

a. Three samples a week while also following Condition 8 of this letter for the first two weeks following shutdown, then;

b. Two samples a week until the MPE wells are turned off, then;

c. Three samples a week for the first two weeks after all extraction has ceased, then;

d. Two samples a week until the TTZ reaches half the target temperature, then;

e. One sample every two weeks until ambient subsurface conditions are reached.

Shell Response

The conditions are acknowledged, and the requirements have been incorporated into the FDRCWP (see **Section 5**). Please note that the existing SVE system will continue vapor extraction along the West Fenceline during and after SEE operation.

IEPA Condition 10

SOPUS must provide a detailed cost estimate for the proposed SEE system including costs for installation, operation and shutdown of the system pursuant to 35 IAC 724.244. The estimates must be based upon third party costs and must be supported by a detailed breakdown of the estimated third-party cost for completing each required task. The amount of the various resources needed to complete each task must

be provided, as well as the unit cost of these resources and an adjustment for contingencies. Justification for all data used in these calculations must also be provided.

Shell Response

The condition is acknowledged. A detailed cost estimate is included with the FDRCWP (see **Table 3**).

IEPA Condition 11

The revised Report and Workplan must indicate that SOPUS will operate the SEE system for a longer period of time in the event that the shutdown criteria required in Condition 4 of this letter have not been met during the proposed six-month duration. It would be counterproductive to shutdown the system without achieving the remediation objectives (ROs) and to leave Contaminants of Concern (COCs) behind when the subsurface temperatures have risen significantly.

Shell Response

The condition is acknowledged and has been addressed by the incorporation of Condition 4 into the FDRCWP. SEE operations will cease once one of the two scenarios below has been achieved, which may result in operation longer than the anticipated 6 months:

- Minimum target soil temperature of 80.2°C (Condition 4.a.i) is met AND Shutdown Criteria 1 and 2 are met (Conditions 4.b and 4.c)
  OR
- Minimum target soil temperature of 80.2°C (Condition 4.a.i Shutdown Criteria 4 is met (Condition 4.f)

IEPA Condition 12

Subsections 4.2.1 and 4.2.2 of the pre-design investigation report indicate that the VOCs concentrations are averaged. When evaluating remediation objectives and shutdown criteria, the individual concentrations at each point must be assessed and not the averaged value.

Shell Response

The condition is acknowledged. Subsections 4.2.1 and 4.2.2 of Workplan Attachment A (Predesign Investigation Report) presented a summary of VOC concentrations in soil and groundwater, respectively. Embedded in Subsections 4.2.1 and 4.2.2 were summary tables that contained statistics for individual chemicals (percent of samples in which chemical was detected; and average concentration of each chemical). These statistics were included in the Predesign Investigation Report merely as an aid in assessing the prevalence of the VOCs encountered during the Predesign Investigation. Individual VOC concentrations were included in Tables 1 and 3 of Attachment A. Individual concentrations, not averages, will be assessed when evaluating ROs and shutdown criteria.

IEPA Condition 13

Subsection 3.8.1 indicates the frequency of liquid sampling is once every two-weeks. To ensure compliance with water permits, Illinois EPA has determined that weekly collection and assessment of samples is necessary. This would also identify any issues with the treatment equipment faster while the system is operational. Therefore, subsection 3.8. 1 must be revised.

Shell Response

The condition is acknowledged. Effluent water will be sampled weekly. Other liquid stream samples mentioned in Subsection 3.8.1 are mid-process and not subject to water permits. Sampling of mid-process streams will be conducted once every two weeks as proposed.

IEPA Condition 14

The Final Design Report and Construction Work Plan needs to be revised to indicate the site operator will conduct daily monitoring of the treatment area and equipment using a portable PID for any emissions and leaks. The monitoring procedures and a monitoring record log must also be developed and included.

Shell Response

The condition is acknowledged. Daily site PID monitoring procedures are described in **Section 5.4** of the FDRCWP, and an example monitoring record log is included as **Attachment H**.

IEPA Condition 15

The Final Design Report and Construction Work Plan must include provisions for the submittal of monthly CMP progress reports indicating the status and progress of SEE remediation in addition to the post construction and installation report and post SEE shutdown and completion report. The monthly CMP progress reports must include, but not be limited to the following:

- *Temperature data*
- *Mass recovery rates*
- *Concentrations of organic compounds in the recovered vapor*
- *Vapor flow rates*
- *Groundwater flow rates*
- *Condensate recovery*
- *Steam injection rates*
- *Electricity (or fuel) consumption*
- *Groundwater concentrations*
- *Contaminant recovery rates*
- *Energy input data.*

The reports must also provide information related to water discharge, air emissions and information from the SVP used to monitor indoor air limits.

Shell Response

The condition is acknowledged. Corrective Measures Program (CMP) monthly progress reports will be submitted to IEPA during SEE operation and will include the data required by Condition 15. A SEE Construction Completion Report, as well as a Post SEE Shutdown and Completion Report will be submitted when applicable.

IEPA Condition 16.a – 16.b

The subject submittal does not adequately address the controls in place in the event of a rebound of COCs concentrations after the SEE system is shutdown and needs to be revised to address this issue. This is a

critical concern, since elevated subsurface temperatures would aid in vaporization of VOCs and the remediation site being in close proximity to a residential neighborhood. Thus, one or both of the following controls must be in place immediately following SEE system shutdown.

> *a. The MPE wells must remain in place until the SVE system is operational again in case of a rebound in the COCs; and/or*
>
> *b. SOPUS must have the SVE system functional immediately after the MPE wells are shutdown, and before ambient subsurface temperatures are reached as proposed in subject submittal.*

Shell Response

The condition is acknowledged. In accordance with Condition 19, MPE wells will remain operational and will continue to extract vapor from the vadose zone for at least 30 days following the halting of steam injection. After the 30-day period, subsurface temperatures will have dropped below the boiling points of benzene and other contaminants of concern (COCs) at standard atmospheric pressure. As discussed by IEPA in Condition 19, 30 days of vapor extraction following the halting of steam injection would be able to address potential vaporization of the COCs.

After the 30-day post-steam-injection vapor extraction period, existing SVE wells in the PWY may be utilized for vapor extraction (see **Figure 5** of FDRCWP), if necessary, based on post-SEE sampling results. The SVE system will then continue to operate in accordance with Condition 1 of the October 1, 2020 IEPA letter. Existing SVE wells in the PWY will be closed, but will remain in place and connected to the SVE system during SEE operation.

IEPA Condition 17

The Final Design Report and Construction Work Plan needs to be revised to include hot sampling procedures, which would allow SOPUS to sample the system, while SEE is operating. These procedures are needed to determine the effectiveness of the SEE system while it is operational. Hot sampling is required to ensure that the ROs are achieved during SEE system operations, to evaluate system performance and do any optimizations required during operations.

> *a. Hot sampling must be conducted at least once a month after the site reaches targeted temperature of 80.2"C. This sampling data must be included in the monthly reports required in Condition 15. above.*

Shell Response

Hot sampling was discussed with the SEE system design engineer (Mc2) and IEPA during the September 21, 2022 meeting. Hot sampling of soils is a technique occasionally used on SEE projects to monitor progress of SEE remediation in zones between steam injection points. It is typically useful at sites with complex lithology and/or where steam injection points are separated by large distances. The lithology of the PWY site is relatively homogenous (mainly sand) and proposed steam injection points at the PWY site are close together.

Steam injection would need to be halted for 1-2 weeks prior to each hot sampling event to allow soil to cool, then an additional 1-2 weeks would be required for soils to heat back up to target temperature. A single hot sampling event would extend SEE operation by about a month, whereas multiple hot sampling events would extend SEE operation even longer.

There are safety concerns with hot sampling. Because borings would be drilled into the heated soil, there is a potential that steam or vapor will escape. Level B or C personal protective equipment (PPE) would possibly be required for field workers. Handling of heated drilling equipment and soil could cause burns. There are also concerns about the representativeness of hot soil samples. Hot soil would need to be cooled before placing in sample containers, and VOCs would volatize while the soil cools.

For the above reasons, hot sampling is not recommended at this time.

IEPA Condition 18

The proposed primary SVP row is insufficient. Additional SVPs must be installed in order to prevent an exposure in the residential area. Three additional SVPs, each vertically in line with SVP-11, SVP-8 and SVP-7 must be installed during the installation of SVP followed with the same procedure provided in section 6 to establish a baseline of soil vapor conditions.

Shell Response

The condition is acknowledged. Three additional SVPs will be installed in the primary row, as specified. **Figure 5** in the enclosed FDRCWP depicts the expanded primary row of SVPs.

IEPA Condition 19

The MPE wells must remain active for at least 30 days post-SEE system shutdown in order to prevent any COCs rebounding and/or migrating to residential neighborhood as discussed in condition 15 above. It is estimated that the temperature would drop 1°C per day according to a USEPA paper on ISTR, and by this estimate the temperature would be 30°C lower than the targeted temperature following the 30-day period. This is well under benzene and other COCs boiling points at standard atmospheric pressure and would be able to address potential vaporization of the COCs.

Shell Response

The condition is acknowledged. MPE wells will remain operational for vapor extraction for at least 30 days after steam injection stops.

IEPA Condition 20

During the entire SEE operation period, sub-atmospheric pressure must be maintained in the TTZ to minimize the risk of upward migration of contaminants. The pressure must also be constantly monitored to ensure that this condition is met.

Shell Response

The condition is acknowledged. The existing VMP network of VMP-41, VMP-10, VMP-11, VMP-17, VMP-13, and VMP-14 will be monitored for vacuum twice weekly. The locations of these VMPs are depicted in **Figure 9** of the FDRCWP. In addition, vacuum at SVPs will be measured immediately prior to sample collection according to the frequency provided in Condition 8.

IEPA Condition 21 (1) and (2)

Following SEE shutdown, SOPUS must:

> *1) continue to induce an inward gradient in accordance with the facility's RCRA Permit; and*
>
> *2) monitor the vadose zone in the vicinity of any wells exceeding groundwater concentrations published in Appendix B, Table H, of 35 Ill. Adm. Code Part 742, until such time as the groundwater concentrations have been reduced at groundwater monitoring wells within the Village of Roxana.*

If vapor monitoring exceeds applicable standards, then remedial measures will be required, and the Report and Work Plan need to address this potential scenario. In addition, until concentrations in groundwater no longer exceed the values in TACO (Appendix B, Table H, of 35 Ill. Adm. Code Part 742) which indicate a potential for vapor intrusion, the groundwater will continue to be a source of potential recontamination of those zones.

Shell Response

The condition is acknowledged. As mentioned in the responses to Conditions 5 and 7.j, Shell will continue to adhere to the requirements of Section IV of the Part B Permit, which includes maintaining a groundwater gradient toward the interior of the refinery.

As mentioned in the responses to Conditions 7.j, 16, and 19, MPE wells will remain operational and vapor extraction will continue for at least 30 days after steam injection has stopped. After the 30-day post-steam-injection vapor extraction period, existing SVE wells in the PWY may be utilized for vapor extraction (see **Figure 5** of FDRCWP), if necessary, based on post-SEE sampling results. The SVE system will then continue to operate in accordance with Condition 1 of the October 1, 2020 IEPA letter. Existing SVE wells in the PWY will be closed, but will remain in place and connected to the SVE system during SEE operation.

IEPA Condition 22

SOPUS should notify the Illinois EPA verbally within 24hrs and in writing within 48hrs of occurrence or discovery of any major problems or leaks in the SEE system. The written notice should include how and when the problem was discovered, how long the problem was ongoing for and what actions were taken to remediate the problem.

Shell Response

The condition is acknowledged.

IEPA Condition 23

All necessary permits must be obtained from the appropriate local, state, and/or federal agencies, as needed.

Shell Response

The condition is acknowledged.

AECOM

If you have any questions please contact Buddy Bealer, Shell Senior Program Manager, at leroy.bealer@shell.com (484-632-7956), or Wendy Pennington at wendy.pennington@aecom.com (314-452-8929).

Sincerely,

AECOM, on behalf of Shell Oil Products US



Brett Howell, PG
Geologist



Wendy Pennington, PE
Project Manager



Samuel Fisher, CHMM
Environmental Scientist

Enclosures: RCRA Corrective Action Certification Form (original plus 1 copy)
Final Design Report and Construction Work Plan

cc:

Buddy Bealer, Shell
Amy Butler, IEPA, Springfield
Rob Watson, IEPA, Springfield
Visal Poornaka, IEPA, Springfield
Ali Al-Janabi, IEPA, Collinsville
Gregg Mollett, Greensfelder, Hemker & Gale P.C.
Repositories – Roxana Public Library, website
Project File

AECOM

Old Public Works Yard
Steam Enhanced Extraction

Final Design Report & Construction Work Plan

Roxana, IL

Prepared For:
Equilon Enterprises LLC dba Shell Oil Products US
Roxana, IL

Project Reference: 60674381
December 16, 2022

Delivering a better world

Quality information

Prepared by	Checked by	Verified by	Approved by
Brett Howell, PG Geologist	Samuel Fisher, CHMM Environmental Scientist	Peter Stumpf, PE Engineer	Wendy Pennington, PE Project Manager

Revision History

Revision	Revision date	Details	Authorized	Name	Position

Distribution List

# Hard Copies	PDF Required	Association / Company Name
1 – original	No	Mr. Kenneth E Smith, PE IEPA, Springfield
None	Yes	Mr. Visal Poornaka IEPA, Springfield
None	Yes	Ms. Amy Butler IEPA, Springfield
None	Yes	Mr. Rob Watson IEPA, Springfield
None	Yes	Mr. Ali Al-Janabi IEPA, Collinsville
None	Yes	Gregg Mollett Greensfelder, Hemker & Gale
None	Yes	Roxana Public Library, Website
None	Yes	Leroy (Buddy) Bealer Shell
None	Yes	Mr. Thomas Morgan Phillips 66

Prepared for: Equilon Enterprises LLC dba Shell Oil Products US

Prepared by:

Brett Howell, PG
Geologist
M: 309/530-5666
E: brett.howell@aecom.com

AECOM
100 N. Broadway
20th Floor
St. Louis, MO 63102
aecom.com

Samuel Fisher, CHMM
Environmental Scientist
M: 314/296-1969
E: samuel.fisher@aecom.com

AECOM
100 N. Broadway
20th Floor
St. Louis, MO 63102
aecom.com

Wendy Pennington, PE,
Senior Engineer/Project Manager
M: 314/452-8929
E: wendy.pennington@aecom.com

AECOM
100 N. Broadway
20th Floor
St. Louis, MO 63102
aecom.com

Copyright © 2022 by AECOM

All rights reserved. No part of this copyrighted work may be reproduced, distributed, or transmitted in any form or by any means without the prior written permission of AECOM.

Table of Contents

1. Introduction 1
1.1 Site Background 1
1.2 Purpose 2
1.3 Project Scope 3
1.4 Project Team and Management 3
1.5 Project Schedule 4
1.6 Cost Estimate 5
2. System Design Plans 6
2.1 Remedial Components 6
2.2 Target Zones 6
2.3 Steam Injection Wells 6
2.4 Multiphase Extraction Wells 6
2.5 Sensor Wells 7
2.6 Extraction System 7
2.7 Treatment System 8
2.8 Treatment Flows and Processes 8
2.9 Steam System 9
2.10 Utility Requirements 9
2.11 Air and Water Permits 10
3. Construction & Technical Specifications 11
3.1 Staging Equipment & Site Security 11
3.2 Steam Injection Wells 11
3.3 Extraction Wells 11
3.4 Sensor Wells 12
3.5 Extraction Piping 12
3.6 Steam Piping 12
3.7 Treatment System 13
3.8 Existing SVE Wells 13
3.9 Well Abandonments 13
3.10 Construction Quality Assurance Plan 13
4. Groundwater and Soil Sampling 15
4.1 Pre-SEE Groundwater 15
4.2 Pre-SEE Soil 15
4.3 Post-SEE Groundwater 16
4.4 Post-SEE Soil 16
5. Steam Extraction Vapor Monitoring Plan 17
5.1 Baseline Sampling 17
5.2 Field Screened Samples 17
5.3 Laboratory Analytical Samples 18
5.4 Treatment Area Monitoring 18
6. Performance Monitoring & Shutdown Criteria 19

6.1 Subsurface Monitoring 19
6.2 SEE System Liquid Samples 19
6.3 SEE System Vapor Samples 19
6.4 Mass Recovery 19
6.5 Progress Reports and Notifications 20
6.6 SEE Shutdown Evaluation 20
7. Waste Management 21
8. Post-SEE Activities 22
8.1 Vapor Extraction 22
8.2 Groundwater Treatment 22
8.3 Demobilization 22
9. References 23

List of Tables

Table 1 – Project Team
Table 2 – Project Schedule
Table 3 – Cost Estimate

List of Figures

Figure 1 – Old Public Works Yard Location Map
Figure 2 – Integrated Remediation Plan
Figure 3 – Benzene in Soil >580 mg/kg - Model Output
Figure 4 – Benzene Plume >580 mg/kg with SEE System Layout
Figure 5 – SVP Locations and Existing Well Locations
Figure 6 – Pre-SEE Soil Gas, Soil, and Groundwater Sampling Locations
Figure 7 – Post-SEE Soil Gas, Soil, and Groundwater Sampling Locations
Figure 8 – SEE System Radius of Capture with SVPs and Underground Utilities
Figure 9 – Subsurface Vacuum Monitoring Network
Figure 10 – Dissolved Phase Benzene Plume Footprint Shrinking 2013-2022
WFL-01 – Well Field Layout
EQL-01 – Equipment Layout
EQL-02 – Equipment Layout
PIL-01 – Piping Layout
WCD-01 – Well Completion Drawing
WCD-02 – Well Completion Drawing
WCD-03 – Well Completion Drawing
WHD-01 – Well Head Details
WHD-02 – Well Head Details
SPD-01 – Steam Piping Details
SPD-02 – Steam Piping Details
EPD-01 – Extraction Piping Details
ESL-01 – Electrical Single Line Drawing
PFD-01 – Process Flow Diagram
P&ID-01 – Process and Instrumentation Diagram
P&ID-02 – Process and Instrumentation Diagram
P&ID-03 – Process and Instrumentation Diagram
P&ID-04 – Process and Instrumentation Diagram

List of Attachments

Attachment A – SEE System Operations & Maintenance Plan
Attachment B – Health & Safety Plan
Attachment C – Equipment Cut Sheets
Attachment D – PWY SEE System Construction Air Permit and FESOP
Attachment E – Water Pollution Control Permit Application
Attachment F – Steam Piping Sizing
Attachment G – 2012-2013 GP-15, GP-16, GP-17, and GP-18 Sample Results
Attachment H – Treatment Area PID Monitoring Log
Attachment I – Mann-Kendall Analysis Information
Attachment J – Corrected Figure 5.B from 2019 Predesign Investigation

List of Acronyms

AMSL	above mean sea level
BGS	below ground surface
CY	cubic yards
digiTAM™	digital temperatre acquisition module
FDRCWP	Final Design Report & Construction Work Plan
FID	flame ionization detector
GPM	gallons per minute
IAC	Ilinois Administrative Code
LGAC	liquid granular activated carbon
LNAPL	light non-aqueous phase liquid
MPE	multiphase extraction
O&M	operations & maintenance
PAH	polycyclic aromatic hydrocarbon
PFD	process flow diagram
PHC	petroleum hydrocarbon
P&ID	process & instrumentation diagram
PID	photoionization detector
PVC	polyvinyl chloride
PWY	Old Public Works Yard
QA/QC	quality assurance/quality control
ROC	radius of capture
RTO	regenerative thermal oxidizer
SCFM	standard cubic feet per minute
SEE	steam enhanced extraction
SS	stainless steel
SVE	soil vapor extraction
SVOC	semi-volatile organic compound
THC	total hydrocarbon
TTZ	target treatment zone
VOC	volatile organic compound
VGAC	vapor granular activated carbon
VMP	vapor monitoring probe
WCD	well completion detail
WFL	well field layout
WHD	wellhead detail
WRR	Wood River Refinery
WWTP	wastewater treatment plant

1. Introduction

1.1 Site Background

On behalf of Equilon Enterprises LLC, dba Shell Oil Products US (Shell), AECOM Technical Services, Inc. (AECOM) has prepared this Final Design Report and Construction Work Plan (FDRCWP) to describe the steam enhanced extraction (SEE) system for remediation of subsurface impacts at the Village of Roxana Old Public Works Yard (PWY) located in Roxana, Illinois (**Figure 1**).

The PWY is bounded on the west and north by Illinois Route 111/Old Edwardsville Road and East Eighth Street, respectively. There is a Norfolk Southern railroad corridor along the southern boundary and the Phillips 66 Wood River Refinery (WRR) forms the eastern boundary. Residential properties are directly north of the PWY. The property occupies approximately 2.4 acres, where approximately 0.4 acres is covered or obstructed by buildings and/or structures. Topographically, the western and southern portions of the PWY are at a lower elevation relative to the northeastern portion of the PWY. This relief across the PWY is approximately 13 feet. The PWY owned by the Village of Roxana and is infrequently used by the Village for vehicle maintenance and storage. The PWY is also the location of the Village's former wastewater treatment plant (WWTP). In-ground concrete tanks associated with the WWTP continue to be used to help manage stormwater overflow in the Village. Most of the PWY is enclosed by a chain link fence.

Shell has conducted several subsurface investigations at the PWY (URS, 2007). Quarterly groundwater monitoring began in 2010. These investigations indicate dissolved-phase benzene concentrations ranging from 100 milligrams per liter (mg/L) to 1,900 mg/L[1]. In 2011, Shell constructed a soil vapor extraction (SVE) system compound on the adjoining WRR which includes a header-line connecting to six extraction wells at the PWY. There are also eight multilevel vapor monitoring probes (VMPs), and two groundwater monitoring wells at the PWY. The SVE system has operated at the PWY since late 2012. Soil vapor data for the PWY demonstrates the shallow and intermediate zones have been remediated. Deep (>25 feet below ground surface) soil gas concentrations have also decreased over time but remain in some areas with fluctuating groundwater levels and submerged impacts.

The WRR, adjacent to the eastern PWY boundary, currently maintains hydraulic control of groundwater in the area with a groundwater control system consisting of pumping wells which operate at a minimum combined flow of 3,000 gallons per minute (gpm). The pumped groundwater is treated to remove contamination, and then used by Phillips 66 (P66), the refinery operator, in refining processes. Groundwater pumping is conducted to contain groundwater contamination within refinery property boundaries.

IEPA requested that Shell evaluate more aggressive remedial technologies to reduce the highest benzene concentrations in the PWY. In 2019, in-situ thermal remediation (ISTR) was identified as a potentially viable alternative; a predesign investigation was conducted to gather information to better assess its viability. Results from the June and July 2019 predesign investigation found that the zone of highest impact in the PWY ranges in elevation from approximately 388 to 398 feet above mean sea level which correlates to approximately 37 to 54 feet below ground surface (bgs) due to the relief at the PWY. Additionally, detected benzene concentrations exceeding the soil saturation limit (580 mg/kg)[2] suggest the presence of residual non-aqueous phase liquid (NAPL).

On November 24, 2020, Buckeye Partners, L.P. (Buckeye) reported a gasoline pipeline release near the southeast corner of the PWY. The release is associated with IEPA Violation Notice L-2021-00084, LPC #1190905036 – Madison County. Impacts from the Buckeye release have been observed at nearby SVE well, VMP, and groundwater monitoring well locations.

On January 31, 2022, AECOM, on behalf of Shell, submitted the Public Works Yard Steam Enhanced Extraction (SEE) Workplan (AECOM, 2022a). On August 22, 2022, IEPA issued a response letter approving the workplan with conditions, thereby approving Phase 1 of the Corrective Measures Program (CMP)(IEPA, 2022). AECOM, Shell, and McMillan-McGee met with IEPA on September 21, 2022, to discuss the conditions of the response letter. AECOM, on

[1] Values are from Roxana Interim Groundwater Monitoring Reports – wells MW-7 and MW-8.
[2] Value from Title 35 of the Illinois Administrative Code, Part 742 (TACO), Appendix A, Table A (IEPA, 2013a)

behalf of Shell, has contracted McMillan-McGee Corporation (McMillan-McGee) to design, construct, and operate the SEE system for the PWY.

1.2 Purpose

The purpose of the SEE system is to target VOCs sorbed to saturated soils, including VOCs as NAPL. Sorbed residual material in the saturated zone feeds dissolved phase impacts in groundwater. The SEE system is intended to remediate this residual material. Treatment of captured dissolved phase contamination will occur during SEE operation, but it is not the primary objective. After SEE operation is completed, remaining dissolved phase impacts will be addressed by the WRR groundwater control system (in accordance with RCRA Part B Post-Closure Hazardous Waste Permit B-43R [Part B Permit], Section IV)(IEPA, 2010), and natural attenuation processes.

The cross-section below depicts the three "zones" of remediation present at the PWY: the unsaturated (vadose) zone, which has been actively remediated by the SVE system since 2012; the saturated zone, which has been actively remediated by the refinery groundwater control system since about 1990; and the zone of residual sorbed VOCs in the saturated zone, which will be targeted by the SEE system.

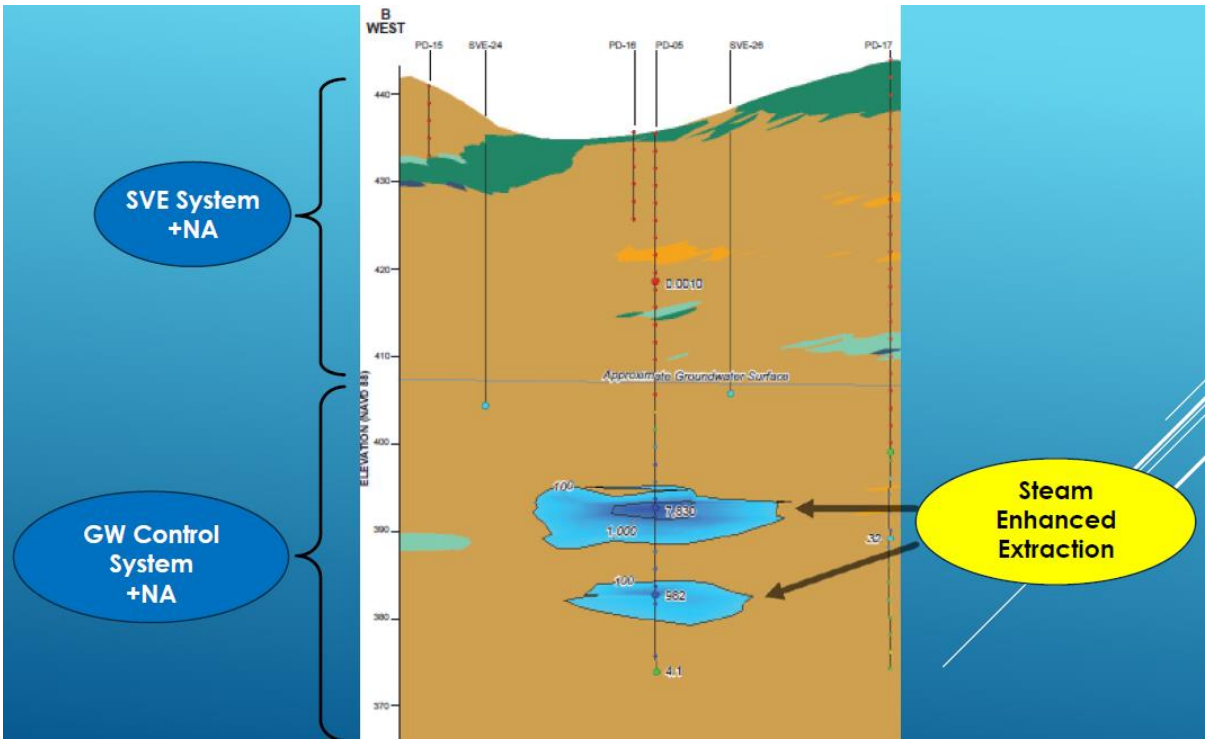

During SEE system operation steam will be injected into the subsurface, targeting residual sorbed VOCs. At elevated temperatures, vaporization, volatilization, dissolution, and desorption are enhanced, such that conditions are more favorable for the removal of VOCs from the subsurface. Vaporization (i.e., boiling of immiscible VOCs and groundwater) and volatilization (i.e., partitioning of VOCs from the dissolved phase to the gas phase) are the most dominant mass removal mechanisms during SEE. For example, the vapor pressure benzene increases approximately 10- to 30-fold from ambient to near-boiling temperatures. As such, extraction wells are designed to effectively capture the produced gas, with appropriate locations, screened intervals, and applied vacuums.

Figure 2 below depicts the site's integrated remediation plan. SEE is intended accelerate remediation in the PWY area to complement other ongoing remediation pathways.

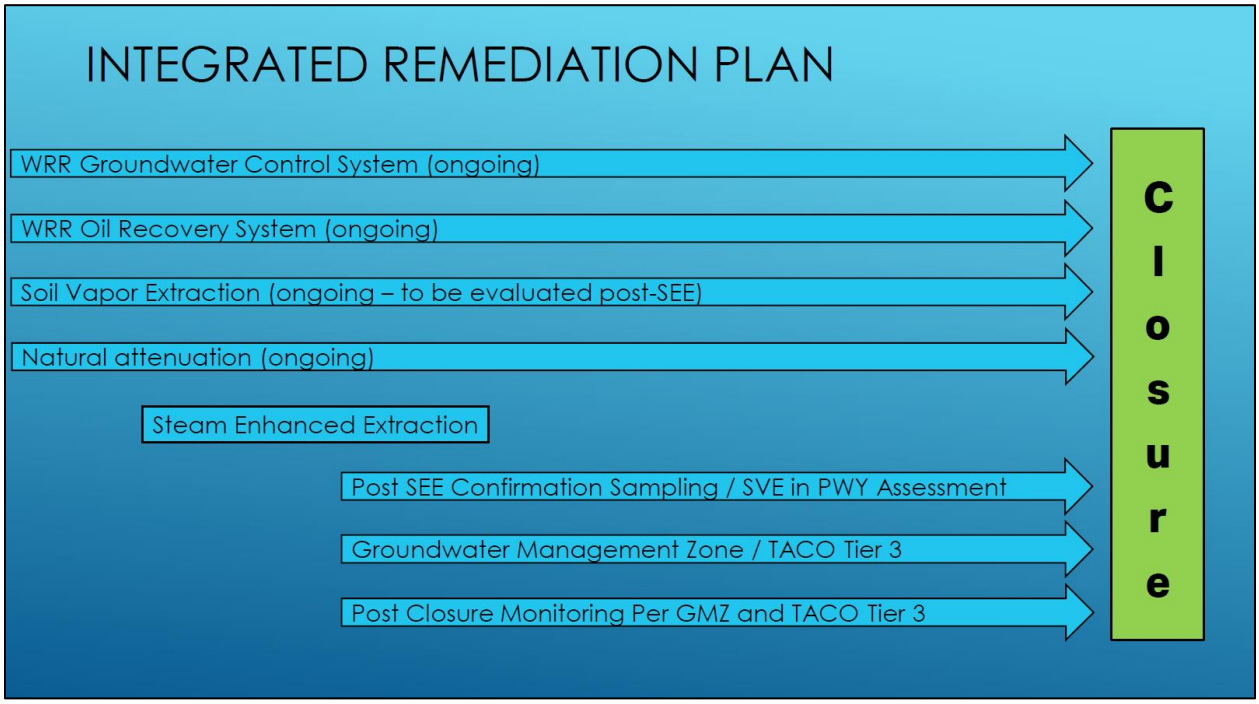

Figure 2 – Integrated Remediation Plan

1.3 Project Scope

The SEE wellfield layout is based on two areas targeted for treatment in the PWY as shown on **WFL-01**. The targeted treatment zones (TTZ) were developed using benzene data collected during the 2019 Predesign Investigation and historic site investigations. The TTZs address locations where soil benzene concentrations meet or exceed the residential soil saturation limit for benzene (580 mg/kg). **Figure 3** depicts modeling results using the benzene residential limit. The two areas are designated as Treatment Areas A and B with a combined total area of approximately 48,204 square feet (ft^2). Treatment area footprint and benzene modeling results are depicted on **Figure 4**. Treatment Area A is approximately 28,060 ft^2 with a vertical treatment interval between 378 and 397 feet above mean sea level (amsl); and Treatment Area B is approximately 20,144 ft^2 with a vertical treatment interval between 389 and 395 feet amsl. The subsurface treatment volume is approximately 23,183 cubic yards (CY). SEE injection points will be located laterally and screened vertically to create a heated subsurface zone to fully encompass the targeted volume (23,183 CY) of subsurface soil and groundwater, with a total thermal influence area (area subject to thermal treatment and temperature changes) of approximately 48,204 square feet.

1.4 Project Team and Management

The project team, shown in the **Table 1** below is comprised of personnel from AECOM, McMillan-McGee, and Shell.

Organization	Contact Name	Role	Contact Information
Shell	Leroy (Buddy) Bealer	Project Manager	leroy.bealer@shell.com
			-
	Cristin Bruce	Technical Lead	Cristin.Bruce@shell.com
			-
AECOM	Wendy Pennington	Project Manager	wendy.pennington@aecom.com
			+1 (314) 452-8929
	Brett Howell	Field Lead	brett.howell@aecom.com
			+1 (309) 530-5666
	Samuel Fisher	Deputy Project Manager	samuel.fisher@aecom.com
			+1 (314) 296-1969
	Peter Stumpf	Technical Consultant	peter.stumpf@aecom.com
			+1 (714) 689-7187
	David Macone	Technical Consultant	david.macone@aecom.com
			+1 (978) 905-2538
McMillan-McGee	Clayton Campbell	Project Engineer	ccampbell@mcmillan-mcgee.com
			+1 (403) 569-5104
			+1 (403) 660-8561
	David Rountree	Technical Review	drountree@mcmillan-mcgee.com
			+1 (403) 569-5116
			+1 (403) 921-0848
	Wayne Robella	Engineering Support	wrobella@mcmillan-mcgee.com
			+1 (403) 569-5106
			+1 (403) 461-1669

Table 1 – Project Team

McMillan-McGee will work with their own provided subcontractor(s) to construct the SEE system. AECOM representatives will be onsite each day of construction activities to conduct oversight and to ensure that details in this FDRCWP are followed. During construction activities the AECOM oversight representative(s) will provide daily updates to the AECOM project manager and will be in regular contact with McMillan-McGee.

The SEE system Operations & Maintenance Plan is included as **Attachment A**. The Health & Safety Plan is included as **Attachment B**.

1.5 Project Schedule

Refer to **Table 2** below for approximate durations of different phases of the project.

Phase	Approximate Duration	Description
Equipment Procurement	12-22 weeks	Equipment is sourced within the U.S. and internationally.
Installation	12-14 weeks	Drilling, civil work, surface connections
Acceptance Testing	1-2 weeks	Confirm system components are functioning properly.
Operations & Maintenance	~6 months	SEE shutdown is based on specific criteria, not a time limit.
Demobilization	3-4 weeks	Subsurface wells to be abandoned and all other recoverable equipment is removed.
Operational Data Delivery	4-6 weeks	McMillan-McGee to provide data to AECOM.

Table 2 – Project Schedule

The goal is to commence SEE system operation in Spring 2023; however, construction and installation activities are dependent upon several factors that may cause delays including, but not limited to, weather, equipment and supplies availability, shipping lead times, and access agreements with property owner and/or utilities.

1.6 Cost Estimate

A detailed cost estimate for SEE System Installation/Construction activities is presented below in **Table 3**.

ACTIVITY	COST
SEE System Installation/Construction	
AECOM Labor	$ 250,809
IDW Management	$ 45,000
Sampling/Oversight Equipment/Materials	$ 40,000
Permitting Fees	$ 10,150
Sample Analysis	$ 35,000
Civil Support (gravel, fencing)	$ 20,000
SVP Install, GWP, Well Abandon	$ 80,000
System Well Install, Construction/Installation	$ 3,100,000
GRAND TOTAL	**$ 3,580,959**

Table 3 – Cost Estimate

2. System Design Plans

Construction of the SEE system will follow the plans presented in this FDRCWP as closely as possible. The actual SEE system layout may have minor variations from these plans, due to potential underground obstructions or other site conditions.

2.1 Remedial Components

The design for thermal remediation for the Site consists of:

- 81 steam injection boreholes (48 in Area A; 33 in Area B) with 1 screen interval per borehole. 2-inch diameter casing and screen used for each injection point
    - Steam injection wells are named “SI-###”
- 36 multiphase extraction wells (MPE) wells (17 in Area A; 19 in Area B). 4-inch diameter MPE wells to allow installation of air-driven groundwater recovery pumps
    - MPE wells are named “X-###”
- 16 vertical sensor wells (10 in Area A; 6 in Area B. Area A will have 9 and Area B will have 5 digiTAM™ sensors vertically spaced at 3-foot intervals. There will be a total of 120 temperature sensors.
    - Temperature sensor wells are named “T-###”

A soil and groundwater treatment system, including knockout pots, pumps, holding tanks, bag filters, an air stripper, sacrificial vapor-phase and liquid-phase carbon vessels, vacuum blowers, pumps, heat exchangers, sensors, and controls will also be included. To promote efficient re-use of equipment, for environmental reasons, the SEE system will be connected to the existing regenerative thermal oxidizer (RTO) onsite and operated by AECOM.

2.2 Target Zones

The Site is divided into two adjacent TTZs: Areas A and B. The Area A heated area is approximately 28,000 square feet (ft^2) with a treatment interval between 397 and 378 ft above mean sea level (amsl); Area B is approximately 20,150 ft^2 with a treatment interval between 395 and 389 ft amsl. The heated area is defined as the area that extends 3 ft beyond the perimeter steam injection well locations. The treatment area is defined as any zone within the perimeter steam injection wells that is within the defined treatment interval for TTZ Area A and B.

2.3 Steam Injection Wells

A total of eighty-one (81) steam injection wells will be installed throughout the treatment volume. Area A will have forty-eight (48) steam injection wells where four (4) of those wells are installed at an angle underneath Building B. Area B will have thirty-three (33) steam injection wells, where eight (8) of those wells are installed at an angle underneath the Buckeye pipeline to accommodate a 5 ft drilling offset. The steam injection wells will be located as shown on the Well Field Layout drawing (see **WFL- 01**) and constructed as shown on the Well Construction Detail drawings (**WCD-01** and **WCD-02**) and described in section 3.2. Details of the wellhead connections to the steam conveyance network are presented in **WHD-02**.

Steam injection rates will be adjusted throughout operations and will be dependent on the rate of heating in the subsurface. Once the target temperature is achieved in an area, the steam injection rate will be placed into maintenance mode, in which the steam injection rates are reduced. In maintenance mode, the treatment zone is kept at or above the design temperatures, and mass recovery is maximized.

2.4 Multiphase Extraction Wells

Thirty-six (36) MPE wells will be installed at the Site, complete with compressed air assisted vacuum-lift groundwater recovery pumps, placed throughout the treatment volume. Area A will have seventeen (17) MPE wells where one (1) of those wells are installed at an angle underneath Building B. Area B will have nineteen (19) MPE wells where six (6) of those wells will be installed at an angle underneath Building D. Locations of buildings are depicted in **Figure 4**.

MPE extraction wells will be installed on 30 to 50 ft centers, similar to the steam injection well locations; however, extraction well locations are restricted to the interior of the treatment areas. They are located primarily in the center of steam injection well triangle arrays to optimize heat transfer through the heated zone by drawing vapor and liquid away from the thermally energized zones to colder areas between the steam injection wells and underneath the buildings. The total vapor recovery flow is anticipated to range between 875 and 1,799 standard cubic ft per minute (scfm) depending on the steam injection rate to the formation. This corresponds to 24 to 50 scfm per extraction well.

The extraction wells are located configured as shown in **WFL-01** and constructed as shown in the Well Construction Diagram drawing **WCD-01** and **WCD-02** and described in **Section 3.3**. Details of the down hole pump assembly and wellhead connections to the piping network are presented in **WHD-01**.

2.5 Sensor Wells

Sixteen (16) digiTAM^{TM} temperature sensor wells will be used to monitor subsurface temperatures within the treatment volume. These electronic sensors use the three-wire communications protocol and are rated for 125°C. The digiTAM^{TM} wells will have sensors vertically spaced at approximately 3 ft intervals. Each sensor string in Area A will contain 9 sensors, and each in Area B will contain 5 sensors, for a total of 120 individual temperature monitoring points at the Site. Area A will have ten (10) sensor wells where one (1) of those wells are installed at an angle underneath Building B. Area B will have six (6) sensor wells where one (1) of those wells will be installed at an angle underneath Building D. Sensors in Area A will be placed at 36 ft below ground surface (bgs), 39 ft bgs, 42 ft bgs, 45 ft bgs, 48 ft bgs, 51 ft bgs, 54 ft bgs, 57 ft bgs, and 60 ft bgs. Sensors in Area B will be placed at 48 ft bgs, 51 ft bgs, 54 ft bgs, 57 ft bgs, and 60 ft bgs. Sensor placement is designed to provide temperature data both vertically and horizontally throughout the target treatment volume in Area A and B.

These sensors will be located as shown in **WFL-01** and constructed as shown in the Well Construction Diagram drawing **WCD-01** and **WCD-02**. Wellhead details are presented in the Well Head Diagram drawing **WHD-01**.

2.6 Extraction System

Pneumatic groundwater recovery pump assemblies will be used for the extraction of groundwater. The treatment system has been designed to accommodate a peak liquid extraction rate of 40 gallons per minute (gpm), with a normal, design extraction rate of 20 gpm. The extraction and treatment system is designed to capture and separate moderate amounts of free-phase product through use of the pumps and a phase separator. An extraction rate roughly two times greater than that of cold-water equivalent steam injection will be maintained throughout the project to ensure inward hydraulic gradients within the TTZs. Extraction rates at individual MPE wells will vary over the course of thermal treatment, in particular as phase changes and pneumatic fracturing increase the permeability of lower permeability soil encountered (if any).

An air compressor will supply air to each pump at sufficient pressure to overcome the hydrostatic confining forces of the water column at the bottom of the extraction line. Liquid extraction from the MPE wells will be controlled through timer solenoids and isolation ball valves in the well field. Multiple extraction wells will be controlled by a given compressed air solenoid valve. All MPE wells are constructed of 4-inch steel casings to allow installation of this equipment.

The extraction system will use two in-line rotary-lobe blowers (B-220A and B-220B on **PFD-01**) to provide the driving force for vapor extraction and groundwater/soil vapor conveyance through the piping network to the treatment system. The extraction piping layout is shown on **PIL-01** and **EPD-01**. This blower will be capable of providing both high-flow, low vacuum, and low-flow, high vacuum conditions using suitable flow control valves and variable frequency drives. The vapor recovery line for vapor extraction piping will connect to the primary liquid/vapor knockout tanks and heat exchangers to capture entrained liquids and condensate before being moved to the vapor treatment side of the treatment system.

2.7 Treatment System

The treatment system will process two flow streams; (1) vapors and entrained liquids; and (2) groundwater. A complete process visual presentation and equipment detail of the treatment system can be found in the process flow diagram (PFD) **PFD-01, P&ID-01, P&ID-02, P&ID-03**, and **P&ID-04**. The ancillary energy, used for the treatment system and other electrical facilities, is estimated at 841 MWh.

Two in-line blowers (B-220A and B-220B) will be used to extract volatilized vapors and liquid from the MPE wells. Extracted liquids and vapors will be piped back to the treatment system via a common header and will first pass through a 5,000-gallon silt/liquid/vapor knockout tank (tank KO-100 shown on **PFD-01** and **P&ID-01)** to separate the liquids (i.e. condensate) and entrained sediments from the vapor stream. Vapors will then pass through a shell & tube heat exchanger (HE-120) cooled by cooling tower (CT-130), to reduce the process steam temperature, and then a liquid-vapor separator (KO-140) to extract additional condensate formed due to cooling in the heat exchanger. The vapor stream will be further cooled as it passes through a second shell & tube heat exchanger (HE-160) using a 50% propylene glycol/50% water coolant, which is chilled using a chiller (CH-170), and then a liquid-vapor separator (KO-180) to extract additional condensate formed due to chilling in the heat exchanger.

Following liquid removal, vapors will be drawn through the two vacuum blowers (B-220A and 220B) which will deliver approximately 900 scfm under a vacuum of 12 inHg. The vapor stream will pass through a silencer (S-230) and then a fin fan heat exchanger (HE-240) to counteract the temperature increase from the blowers. The vapor stream will then be tied into the RTO. Should the RTO experience an upset condition, vapors will be redirected to two 5,000 lb sacrificial vapor granular activated carbon vessels (VGAC-270 & VGAC-280). Vapors generated during the air stripping stage (part of the liquid treatment train) will be tied into the vapor stream following HE-240, prior to vapors being directed to either the RTO or VGACs for treatment. In the event of a power disruption to the SEE system, steam injection will automatically shut down, but vapor extraction will continue. A backup generator will provide power for vapor extraction and direct extracted vapor to the VGACs in the event of a power disruption (see generator cut sheet in **Attachment C**).

Extracted groundwater from the MPE wells will be separated in KO-100 and pumped via P-110 to oil-water phase separator (OWS-400). Prior to OWS-400, condensate from KO-140, KO-180, and KO-250 will be pumped via P-150, P-190, and P-260, respectively, to join with liquid being pumped by P-110. Accumulated light NAPL (LNAPL) will be drained into a 250-gallon tank (T2-410).

Liquids and condensate from the phase separator will be pumped through one air stripper, AS-440 via P-420. Vapor discharge from the air stripper will be passed to KO-250 for treatment by the RTO or VGACs. The process liquid line will then go through three bag filter sets (BF-460A/B/C and BF-470A/B/C) and a shell & tube heat exchanger (HE 480) cooled by a cooling tower (CT-490). The bag filter sets will be designed so that the full process flow can go through one bag filter housing line while the other is being changed.

Liquid discharge from the bag filters will be sent to two 2,000 lb liquid-phase activated carbon treatment vessels (LGAC-500 and LGAC- 510) operated in series. The treated water will be pumped into a final 5,000-gallon equalization tank, from which the water will then be discharged or used for LGAC backwashing.

Combined treated water and treatment equipment discharge will be discharged to an onsite public owned treatment works (POTW) discharge. Treated water discharge to the sewer is estimated to be at a rate of up to 50 gpm.

2.8 Treatment Flows and Processes

A maximum vapor system flow of approximately 1,800 SCFM, and a design maximum extracted groundwater flow of approximately 50 GPM are the bases for the treatment system design. Typically, the maximum contaminant mass-loading rate on the extraction system to be expected during a project is approximately 3-4% of the total contaminant mass extracted per day, approximately 95% of which is usually in the vapor phase, and 5% of which is in the liquid (groundwater) phase.

The main rotary lobe blowers (B-220A/B) will provide the driving force behind the MPE system. Each blower is capable of 2,000 SCFM at a vacuum of 12 inHg. This extraction rate will create and maintain inward pressure

gradients in the subsurface, assuring capture of vapors generated. The back-up VGAC vessels are sized to allow approximately 4 days' operational time at peak mass removal rates before changeout.

Most of the dissolved contamination in the extracted groundwater will be removed by the air stripper prior to entering the LGAC units, which will be used to remove any remaining contamination and to polish the liquid stream. Overall contaminant removal from the liquid stream using the air stripper is expected to be greater than 95%. The percentage of mass that will be removed as dissolved contamination is expected to be less than 5-10% of the total mass. Only approximately 10% of this value (1% of the total contaminant mass) or less is typically recovered as pure phase NAPL for benzene. The LGAC vessels selected are sized for the instantaneous process flow through them; they are anticipated to only require one changeout at the end of the remediation.

All buildings and tanks will have secondary containment with leak detectors (shown on **P&ID-01 through P&ID-04**). Tanks and separators will have sensors for flow control and to detect overflow conditions. The typical sensor set points for treatment system tanks are:

- low: which shuts off the discharge pump
- high: which turns on the discharge pump
- high-high: which shuts the groundwater recovery off but maintains a minimal vacuum level for pneumatic control ("Yellow Alarm")
- high-high-high: which shuts off groundwater recovery and all vacuum recovery ("Red Alarm")

Tanks containing VOCs or untreated water will be held under vacuum to control fugitive emissions. A line from the primary knockout tank (KO-100) will be connected to treatment tanks through a vacuum regulator and vacuum relief valve, to prevent VOC vapors from escaping. Tanks will also have individual vacuum relief valves as a safety precaution. Additionally, valves, flanges, and pipe joints shall be monitored periodically via use of a handheld photo-ionization detector (PID) during routine inspections to monitor for VOC release.

2.9 Steam System

The steam injection system will be fed by a natural gas steam boiler capable of producing 13,800 lbs/hr of steam at 150 pounds per square inch (PSI). The unit is oversized for the current design injection rate of 10,000 lbs/hr. The boiler is contained in a stand-alone inclement weather 53 ft trailer. See **Attachment C** for a cut sheet of the steam boiler unit. The location of the steam boiler is shown on **EQL-01** and **EQL-02**. The steam piping layout is shown on **SPD-01**. The steam injection system will be equipped with eight drip leg and steam trap assemblies, shown in **SPD-02**. All sections of 2-inch and 3-inch steam headers will be insulated with 1-inch thick Owens Corning SSL II with ASJ Max Fiberglas™ pipe insulation jackets to improve energy efficiency and site safety, as shown in **SPD-01**.

2.10 Utility Requirements

Electrical

The power requirement will be satisfied by one three-phase service. One transformer will feed one Power Distribution Panel (PDP). This will serve as the main disconnects for the treatment area. The PDP unit will be located in the electrical equipment area, shown on the Equipment Layout Drawing (**EQL-01 and EQL-02**). A detailed description of the electrical requirements can be found in the Electrical Single Line (ESL) diagrams **ESL-01**. See **Attachment C** for the PDP cut sheet. An emergency backup generator will be part of the SEE system, for use in the event of a power disruption (see cut sheet in **Attachment C**)

Water

A water usage rate of 10 to 20 gpm for the steam boiler is expected during operations, depending on the operations stage, resulting in a total water requirement for the boiler of 3.3 million gallons and a water extraction total of up to 6.8 million gallons based on an approximate extraction/injection ratio of up to 2.0. Additional water will be required to feed the treatment system cooling processes and will be 5 to 15 gpm depending on the heat load.

2.11 Air and Water Permits

The SEE system will be connected to the existing SVE system, which required a construction air permit, and a revision to the SVE system's Federally Enforced State Operating Permit (FESOP No. 12040025). See **Attachment D** for the construction air permit and revised FESOP.

Treated wastewater from SEE operations is planned for discharge to the Village of Roxana publicly owned treatment works (POTW). A Contained-In Determination Request was approved by IEPA in a letter dated July 11, 2022. A Water Pollution Control Permit Application was sent to the Village of Roxana for review and sign off on October 18, 2022. This application will be sent to IEPA for approval once received back from the Village of Roxana. The Water Pollution Control Permit Application, in draft form, is included as **Attachment E** (the application has not been finalized as of the submittal date of this FDRCWP).

3. Construction & Technical Specifications

Field construction activities include the installation and/or performance of:

1. Steam injection wells
2. MPE wells
3. Sensor (digiTAM™) wells
4. Steam boiler and treatment system equipment
5. Treatment system piping and RTO integration
6. Steam injection piping and insulation
7. Connecting steam injection lines and setting up metering
8. The header connection to the treatment system skid
9. Potable water connection
10. Sewer connection
11. Power connections to the treatment system
12. Power and gas connections steam boiler
13. System acceptance testing
14. Wet testing the treatment system prior to startup

3.1 Staging Equipment & Site Security

All equipment and supplies used during the construction of the treatment system will be staged in a secure manner. The treatment system will be located within a secured fenced-in area of approximately 5,500 ft^2, as shown in **EQL-01 and EQL-02**. Equipment will be placed in a manner to minimize hose and wire runs. The PDP will be placed as close as possible to the Site transformer. Equipment cut sheets can be found in **Attachment C**.

Prior to construction and operations, the existing fence should be modified with privacy slats. Equipment will be stored either in a locked container, or in an area deemed safe by AECOM. “Hot Surface” signs will be hung Site wide.

3.2 Steam Injection Wells

The steam injection wells will each consist of a 2-inch diameter; 0.010 inch slotted 304 stainless steel (SS) screen. The screened interval is from 54 to 57 ft bgs in both Area A and B. A filter pack consisting of graded sand (20/40 silica sand or equivalent) will be installed in the annular space around the well screen. The boring plug will be completed with a grout (no bentonite) and fine sand seal to surface. Each well will be completed with an adapter and wellhead and piped to the steam boiler. Each wellhead will have a temperature gauge, orifice plate meter, a low- and high-pressure gauge, and a sample port/relief valve. See **WFL-01** for the well field layout and **WCD-01, WCD-02, and WCD-03** for the steam well construction drawings. For well head details, please refer to **WHD-02** for the wellhead design.

3.3 Extraction Wells

The MPE well boreholes will be 4 inch in diameter and consist of a continuous wire wrap 0.010-inch slotted 304L SS screen. Above the screen interval there will be a carbon steel riser, the top of which will be complete with a 4 inch, as appropriate, male National Pipe Thread (mNPT) fitting. A filter pack consisting of 20/40 silica sand (or equivalent) will be installed in the annular space around the MPE well screen. The boring will then be finished to surface with neat Type I/II cement grout (no bentonite), able to withstand elevated temperatures. Each MPE well will be completed with a wellhead, which will be connected, via Parker series 7373T Blue Thunder corrugated chemical suction hose, to a conveyance piping network leading to the treatment system.

MPE well layout can be found in **WFL-01** and the well designs are detailed in drawing **WCD-01, WCD-02, and WCD-03**. The MPE wells will each be equipped with an approximate 1/2 inch inside diameter (ID) polytetrafluoroethene (PTFE) downhole compressed liquid pump recovery line. The compressed air line will be a 1/4-inch outer diameter PTFE tube. Vacuum blowers B-107A/B will apply vacuum to the MPE wellhead in the above ground treatment

system. Each MPE wellhead will be equipped with a temperature gauge, a vacuum gauge, and a sample port/bleeder valve. Detailed wellhead and pump design drawings are presented in drawing **WHD-01**.

3.4 Sensor Wells

Installation of vertically spaced digiTAM^{TM} sensors will be performed in conjunction with the installation of the steam injection and extraction wells. A string of electronic sensors at 3 ft depth vertical intervals, will be housed in a watertight 1.5-inch carbon steel casing with coated threads for a water-tight seal. The digiTAM^{TM} sensors record temperature at their respective depths.

Grout will be used to fill the annular space around the carbon steel casings to surface. The sensor well completion designs can be found in **WCD-01, WCD-02, and WCD-03**. A detailed description of the sensor wellheads can be found in **WHD-01**. An Ethernet cable will be connected to the sensor string and brought back to one of three remote boxes for real-time temperature monitoring. This data will serve for daily system optimization.

3.5 Extraction Piping

After completing the installation of all subgrade components of the system, the extraction system piping will be installed and connected to the extraction wellheads. The lateral connection for each extraction wellhead above surface to the header will be high temperature vacuum hose, 1.5 inch in diameter. Each connection point of the main header will have a 1.5-inch ball valve to adjust the vapor flow rate and isolate the well from the extraction system when necessary. The main header piping for the extraction system will have a 4-to-8-inch diameter schedule 40/20 carbon steel pipe that will run to the treatment system. Lateral piping throughout the well field will consist of 2-to-4-inch schedule 40/20 carbon steel pipe and will be laid out in a fashion to reduce the length of pipe runs. A 1-inch flex hose will run under the multiphase piping to convey compressed air for the pneumatic pump assembly.

Air lines for the pump assemblies will be supplied by a dry rotary fan air compressor (oil-free) in the treatment system. An air regulator will be placed in the field to manage well field air pressure. All extraction system piping is to be sloped at a slight grade toward the treatment system for gravity draining. In Area A, the extraction system piping is to be sloped at a slight grade towards the pump station for gravity draining. The wellheads will be connected to the extraction header with hoses using cam-lock fittings. The extraction header piping will rest on pipe stands.

A layout of the extraction piping can be found in **PIL-01 and EPD-01**.

3.6 Steam Piping

Concurrent to the installation of the extraction system piping, the steam injection piping will be installed and connected to the steam well metering well heads and the steam boiler. The lateral connection for each steam well head to the main conveyance piping will be 1-inch in diameter steam hose. Each connection point of the main header will have a 1-inch ball valve to adjust the flow rate and isolate the well from the steam system when necessary. The main header piping for the extraction system will have a 2-inch to 3-inch diameter schedule 40 carbon steel pipe that will run to the steam boiler in the equipment staging area.

The steam piping system has been designed to supply each steam injection well at a maximum of flow rate of 180 lbs/hr (10,000 lbs/hr total system capacity) at no more than 150 PSI, regulated down to 10 to 30 PSI down hole. The estimated fracture pressure of the formation ranges from 23.7 to 36.4 PSI in Area A and 30.4 to 36.4 PSI in Area B. Formation fracture is unlikely to occur as excessive pressure build up will most likely result in steam routing up the side of the steam well grout to surface. To reduce the risk of compromising steam injection wells due to over pressuring, pressure ramp up will be slow and closely monitored. Steam pressure and flow rate will be measured at the wellheads to ensure that flow increases proportionally to pressure.

The steam piping will be insulated with 1-inch thickness fiberglass insulation. The steam piping will be fitted with drip leg and steam trap assemblies. A layout of the steam piping can be found in **PIL-01 and SPD-01**. Details for the drip leg and steam trap assemblies can be found in **SPD-02**.

Minor changes have been made to the steam piping sizing design that was included in the initial PWY SEE Workplan. The updated steam piping sizing is included as **Attachment F**.

3.7 Treatment System

The liquid treatment system equipment will be skid-mounted with secondary containment in the skid. This secondary containment will have a high-level sensor in the holding tank to shut down the system if a leak is detected. Additionally, all transfer hoses with unprocessed liquids will be double contained (primary with sleeve).

Once the treatment system is set up at its designated location, a short section pipe will be installed from the completion of the extraction system header to the primary liquid/vapor separator (KO-100). The treatment system equipment will arrive with the controls described earlier preinstalled.

After completing all piping connections, the liquid treatment system will be pressure tested at 15 PSI for 30 minutes. Additionally, a wet test of the treatment system will be completed prior to startup. Pressure testing is conducted to check for treatment system leaks. The treatment system will be tested with air and water as applicable in order to ensure the integrity of gaskets, valve seals, etc.

3.8 Existing SVE Wells

Existing SVE wells in the PWY were installed in 2011 and are constructed of PVC (see **Figure 5)**. These wells will be closed, but will remain in place and connected to the SVE System during SEE operation. The SVE wells are screened at 35 ft bgs or shallower, and do not extend vertically into the thermal treatment zone. SVE-21, -22, -23, -24, -26, and -27 are planned to be closed during SEE operation because extraction of heated vapor could potentially damage the wells. However, existing SVE wells may be utilized for additional vapor extraction during SEE operation, as needed. After SEE operation is completed the condition of the SVE wells will be assessed, and repairs or replacements may be performed if necessary.

3.9 Well Abandonments

Some existing wells that are constructed of PVC will be abandoned prior to SEE operation. MW-8, SVE-2, VMP-29, and VMP-30 are constructed of PVC. Their casings extend vertically into the thermal treatment zone and would therefore be thermally deformed if they were to remain in place during SEE operation. Wells that will be abandoned prior to SEE operation are depicted in **Figure 5**.

Other VMPs in PWY (VMP-10, -11, -13, -14, -17 and -41) are constructed of stainless steel and do not extend vertically into the thermal treatment zone, and as such will remain in place during SEE operation. MW-7 is constructed of PVC, but is located outside of the thermal treatment zone and so will remain in place during SEE operation. PWY wells that will not be abandoned prior to SEE operation are depicted in **Figure 5**.

3.10 Construction Quality Assurance Plan

During the installation of the steam enhanced extraction (SEE) system, McMillan-McGee will have oversight personnel with the latest issued-for-construction documents and drawings to ensure each component of the system, from subsurface to aboveground equipment installation is performed according to the approved remedial design. The on-site construction personnel will be responsible for red-lining the issued for construction documents and maintaining record documents for review and approval by the McMillan-McGee Project Engineer and projects team.

General Subcontracted Services

Purchased materials, parts, and components required for a project shall be inspected at the beginning of each definable feature of work. Methods of remedying non-conformance of procured material, equipment, and services shall be implemented. Delivered products shall be accompanied by appropriate documentation as identified in the purchase order prior to use.

Drilling

In the field, the McMillan-McGee representative will verify that the drilling contractor is completing wells as per the Drilling RFQ. Should subsurface obstacles be encountered, or field conditions deviate significantly from those anticipated in the design, the McMillan-McGee representative will photograph and document the condition in their field book and contact the McMillan-McGee project team for further instruction. A survey of the well locations will be

completed to make sure there is minimal opportunity for error in well placement, especially in the placement of the steam injection wells. When completing the well installation, the McMillan-McGee representative will record the following information for the well installation QA/QC (quality assurance/quality control) forms:

a) Total well depth and depth of riser bottom

b) Volume and type of each fill material used on the hole

c) Start and finish times for each boring location

d) Drilling rig, contractor and drilling method

e) Depth of water (if appropriate), borehole diameter and total depth

f) Coring depth (if appropriate).

The forms will be signed by representatives of McMillan-McGee and the driller. This data will be recorded in the field and at the end of each week and the documents will be scanned and stored on the McMillan-McGee server. The drilling QA/QC data, combined with the QA and testing procedures will provide a comprehensive record of all deficiencies and deviations from expected conditions. The Project Engineer will review this record and suggest remedial actions to address any conditions of concern.

Treatment System Delivery and Installation

Prior to shipping, McMillan-McGee will build and test their treatment equipment at their shop and test each piece of equipment individually for functionality and calibration. Both liquid and vapor systems will be checked for leaks. The liquid system will be wet tested with potable water starting upstream at the knockouts and as each treatment vessel comes online, alarm conditions will be checked. Also tested during this time are the safety interlocks, motor rotation, motor starters, solenoid valves, alarm call-outs, and communications between the programmable logic controller and McMillan-McGee's server. To ensure equipment quality and functionality, a detailed input/output checklist will be created that documents the correct function of each piece of equipment functionality.

The extraction system conveyance piping will be installed per the design and wet tested according to the procedures laid out in the O&M plan. This is to ensure all pipes, couplings, and fittings are leak free prior to start-up of the treatment system and introducing process fluids to the system.

After the treatment system has been setup, the McMillan-McGee representative will perform a rigorous evaluation of the system operability, documenting all deficiencies, the record of which will be reviewed by the Project Engineer. Once any deficiencies have been addressed, a formal notification will be provided to AECOM requesting permission to start the SEE system according to the start-up procedures in the Operations and Maintenance Plan.

Steam Injection System Delivery and Installation

Purchased materials, parts, and components required for the project shall be inspected at the beginning of each definable feature of work. Methods of remedying non-conformance of procured material, equipment, and services shall be implemented.

Delivered products shall be accompanied by appropriate documentation as identified in the purchase order prior to use. Each piece of equipment received by subcontractors and installed by McMillan-McGee, will be catalogued to ensure congruence with the design and purchase order. McMillan-McGee oversight personnel will record the equipment information on a form that lists the specified equipment. The recorded information will include the manufacturer, model number, size, and date of receipt. If the equipment is different than what was specified, then the Project Engineer will be notified, and a resolution made.

The steam conveyance piping will be installed per the design and wet tested according to the procedures laid out in the O&M plan. The leak testing includes pressure testing the piping network to its maximum working pressure. This testing is to ensure all pipes, couplings, and fittings are leak free prior to start-up of the boiler.

4. Groundwater and Soil Sampling

Groundwater and soil samples will be collected during installation/construction of the SEE system, as well as post-SEE shutdown. Specific sample intervals will be based on the 2019 Predesign Investigation whenever applicable, to allow for comparison. Results from these samples collected during installation/construction of the SEE system will be included with the SEE Construction Completion Report. Results from samples collected after SEE shutdown will be included in a Post SEE Shutdown and Completion Report.

4.1 Pre-SEE Groundwater

Additional groundwater profiling near PD-03, PD-06, PD-07 and PD-17 (locations sampled during 2019 Predesign Investigation) will be conducted during installation activities of the SEE system and SVPs. Profiling will be performed in the SVP boring nearest to PD-03, the steam injection/extraction boring nearest to PD-07, and a boring to be located approximately halfway between PD-06 and PD-17 (within footprint of SEE equipment pad). Additionally, groundwater profiling will be performed in the SVP boring nearest to MW-25; results from this location will be evaluated and used to determine if additional profiling will be performed near MW-4 as a step-out location. Groundwater samples collected from the above-mentioned locations will be analyzed for the following:

- VOCs via USEPA Method 8260B
- SVOCs via USEPA Method 8270D
- Polycyclic Aromatic Hydrocarbons (PAHs) via USEPA Method 8270D Low Level (LL)

Additionally, a groundwater sample from each MPE well will be analyzed for VOCs prior to SEE operation. See **Figure 6** for locations to be groundwater sampled prior to SEE operation. Samples collected from the MPE wells will be analyzed for the following:

- VOCs via USEPA Method 8260B

4.2 Pre-SEE Soil

Two borings will be drilled and sampled for soil near the wastewater treatment plant – one boring on the north side of the basins and one boring on the south side of the basins. Approximately 3-4 samples will be collected from each of these two borings and will be analyzed for the following:

- VOCs via USEPA Method 8260B
- SVOCs via USEPA Method 8270D
- PAHs via USEPA Method 8270D Low Level (LL)
- Gasoline- and diesel-range organics via USEPA Method 8015

Soil samples will be collected from each steam vapor monitoring point (SVP) boring during SVP installation. Approximately 3-4 samples will be collected from each of the SVP borings and will be analyzed for the following:

- VOCs via USEPA Method 8260B
- SVOCs via USEPA Method 8270D
- PAHs via USEPA Method 8270D Low Level (LL)

Soil samples will be collected from select MPE well borings (10 of 36) and select steam injection well borings (21 of 81) during SEE installation. Approximately 3-4 samples will be collected from each of the selected MPE and steam injection well borings and will be analyzed for the following:

- VOCs via USEPA Method 8260B

Of the 31 soil sample locations, 12 will be analyzed for the following:

- Gasoline- and diesel-range organics via USEPA Method 8015

See **Figure 6** for locations to be soil sampled prior to SEE operation. Specific sample depths will be chosen during drilling based upon a combination of nearby historical samples and field measurements (i.e. PID readings) during drilling.

Condition 7.a of IEPA's 8/22/202 letter requested sample results from locations GP-15, GP-16, GP-17, and GP-18. Those locations were GeoProbe® borings that were drilled in December 2012 and January 2013 (AECOM, 2017). Soil samples were collected, but groundwater profiling was not performed. Soil sample results from GP-15, GP-16, GP-17, and GP-18 are provided in **Attachment G**.

4.3 Post-SEE Groundwater

Following shutdown of SEE, and after subsurface conditions have stabilized (approximately 6 months), MW-08 will be reinstalled using stainless steel well materials; the new installation will consist of two wells: MW-08A and MW-08B. Two new monitoring wells (MW-29A and MW-29B[3]) will be installed along the eastern edge of the PWY, near the location of Predesign Investigation boring PD-07.

Groundwater profiling will be conducted in the SCS-02 boring, and in one of the MW-29A/B borings, prior to monitoring well installation. Groundwater profiling will be conducted at approximately 10-foot intervals once contact with the water table is made.

Selected MPE wells (8 of 36) will be sampled for groundwater after SEE shutdown. See **Figure 7** for locations to be groundwater sampled after SEE shutdown. The MPE wells and four new monitoring well locations will be analyzed for the following:

- VOCs via USEPA Method 8260B
- SVOCs via USEPA Method 8270D
- PAHs via USEPA Method 8270D Low Level (LL)
- VOCs via USEPA Method 8011 for MW-08B and MW-29B

4.4 Post-SEE Soil

When MW-8A/B and MW-29A/B are installed, the B-level borings will be continuously logged and soil samples collected.

Soil confirmation samples will be collected at 12 borings (8 in Area A; 4 in Area B) to be drilled after SEE shutdown. Soil samples will be collected after subsurface conditions have stabilized following SEE shutdown (approximately 6 months). See **Figure 7** for locations to be soil sampled after SEE shutdown. These soil confirmation samples will be analyzed for the following:

- VOCs via USEPA Method 8260B

[3] MW-29A and MW-29B will be installed per Condition 4.b of December 20, 2019 Modified Part B Permit, to which AECOM submitted a reply on October 12, 2020 (AECOM, 2020).

5. Steam Extraction Vapor Monitoring Plan

A soil vapor monitoring network will be installed in the corridor between the PWY northern boundary and the residential area just north of Eighth Street. Fourteen SVPs (steam vapor monitoring points[4]) will be installed to allow for monitoring of potential vapor resulting from SEE operation. The SVP network can be seen in **Figure 8**. SVPs will be on approximately fifty-foot centers and divided into two rows. SVP-1 through SVP-7 will be referred to as the primary row SVPs, while SVP-8 through SVP-14 will be referred to as the secondary row SVPs.

The primary row of SVPs will be located within the SEE system's radius of capture (ROC), while the secondary row of SVPs is located at, or beyond, the maximum ROC of the SEE system. **Figure 8** depicts ROC of the SEE system. SVPs will be screened at three intervals (shallow, intermediate, and deep), with the shallow and intermediate depths being screened at approximately 10 feet and 20 feet below ground surface (bgs). The deepest interval will be screened as close to 30 feet bgs as possible but may be shallower in some locations. The vertical relief and elevation of the water table will determine final depth of the deepest screened interval.

The locations of underground utilities in the vicinity of the PWY SEE system are depicted in **Figure 8**. The vertical distance from any steam injection point to an underground utility is 25 ft or greater. As an additional safety measure, the radius of influence of the MPE wells is anticipated to be 70 ft and covers the areas in which underground lines are located. The primary row of SVPs will be located near the underground lines, allowing for vapor monitoring adjacent to those lines (**Figure 8**).

5.1 Baseline Sampling

Prior to SEE operation, primary and secondary row SVPs will be sampled using stainless steel vacuum canisters and shipped to a laboratory to be analyzed using Modified USEPA TO-15 method. Tedlar© bag samples will be co-collected with canister samples and field screened. Field screening and laboratory analytical results will determine baseline soil vapor concentrations at each SVP. Baseline soil vapor concentrations at SVPs will be included in the SEE Construction Completion Report.

Tedlar© bags will be field screened for CH_4, lower explosive limit (LEL), CO_2, O_2, PID response, THC, and non-methane hydrocarbons (referred to as petroleum hydrocarbons (PHC) at this Site). Vacuum/pressure readings will also be collected each time an SVP is sampled. Field screening will be performed on site by trained personnel using the following equipment:

- Landtec GEM-2000 (used for measuring CH_4, LEL, CO_2, O_2) or equivalent
- Thermo Scientific TVA-2020 Vapor Analyzer - Photoionization Detector (PID) or equivalent
- Thermo Scientific TVA-2020 Vapor Analyzer - Flame Ionization Detector (FID) (used for measuring THC, CH4 and PHC) or equivalent

5.2 Field Screened Samples

With a baseline for each SVP established, and once the SEE system begins operating, routine testing will be conducted to ensure emission capture and control along the Eighth Street corridor. Routine testing will consist of collecting Tedlar© bags and vacuum/pressure readings at each primary and secondary row SVP for field screening. Sampling program frequency will follow the outlined criteria below:

- 1x per week until temperatures within the TTZs reach half of the target temperature, then
- 2x per week until the target temperature (80.2°C) is met, then
- 3x per week after target temperature is met and continuing until two weeks after SEE system shut down, then
- 2x per week until MPE wells are turned off, then
- 3x per week for two weeks after MPE wells are turned off, then

[4] Steam vapor monitoring points (SVPs) are constructed similarly to VMPs, however their purpose for monitoring is specific to operation of SEE.

- 2x per week until TTZ reaches half the target temperature, then
- One sample every two weeks until subsurface temperatures return to ambient conditions.

5.3 Laboratory Analytical Samples

Milestone Samples

The primary SVP row (SVPs 01 through 07) will be sampled using stainless steel canisters and Modified USEPA TO-15 method, plus co-collected Tedlar© bag samples for field screening, at the following milestones:

- When the target treatment zone (TTZ) reaches half the targeted temperature
- When the TTZ reaches the targeted temperature (80.2°C)
- Once per month after TTZ reaches the target temperature until steam injection ceases.

Triggered Samples

In addition to milestone samples, stainless steel canister TO-15 samples may be triggered according to the following logic:

- At primary row SVPs, if routine field screened Tedlar© bag PHC results exceed baseline field screening results by 5% or greater (as measured using FID), a confirmation Tedlar© bag sample will be collected. An increase of 10 ppmv PHC will be the minimum increase required to trigger a confirmation sample in the primary row.
    - If PHC results of the primary row confirmation sample exceed baseline field screening results by 5% or greater (as measured using FID), a stainless steel canister TO-15 sample(s) will be collected at that SVP. An increase of 10 ppmv PHC will be the minimum increase required to trigger a TO-15 sample in the primary row.
- At secondary row SVPs, if routine field screened Tedlar© bag PHC results exceed baseline field screening results by 5% or greater (as measured using FID), a confirmation Tedlar© bag sample will be collected. An increase of 1 ppmv PHC will be the minimum increase required to trigger a confirmation sample in the secondary row.
    - If PHC results of the secondary row confirmation sample exceed baseline field screening results by 5% or greater (as measured using FID), a stainless steel canister TO-15 sample(s) will be collected at that SVP. An increase of 1 ppmv PHC will be the minimum increase required to trigger a TO-15 sample in the secondary row.
- Triggered TO-15 samples will be limited to one per week per SVP.
- Adjustments to SEE system may be made if TO-15 results in exceedance of the soil vapor values in 35 Illinois Administrative Code (IAC) Part 742, Appendix B, Table H (IEPA, 2013b) are observed in secondary row SVPs; not the primary row.
- TO-15 canister samples will not be collected from SVPs after steam injection ceases. At that point Tedlar© bag sample collection will continue in accordance with **Section 5.2** above.

All field screened results, including those that will be relied upon to trigger TO-15 samples, will be measured at a high degree of accuracy. The flame ionization detector (FID) that will be used to measure THC, PHC, and CH_4 detects concentrations down to 0.1 ppmv.

5.4 Treatment Area Monitoring

Daily monitoring of the treatment area and equipment will be conducted using a portable PID to check for the presence of leaks or emissions. The daily check will consist of monitoring the following locations using a portable PID:

- Perimeter of Area A
- Perimeter of Area B
- Equipment Staging Area components/fittings under positive pressure

A blank Treatment Area PID Monitoring Log is included as **Attachment H**.

6. Performance Monitoring & Shutdown Criteria

Performance monitoring will include monitoring of the extraction system and treatment system parameters, SEE parameters, subsurface temperature, and influent hydrocarbon mass.

6.1 Subsurface Monitoring

Continuous monitoring of Site operations will be conducted to ensure that hydraulic and vapor capture are maintained, over-pressurization is prevented, and operational temperatures are achieved and maintained. Vapor pressure gradients will be determined by manually measuring the vadose zone pressure at extraction wells weekly. In addition, the existing PWY VMP network of VMP-41, VMP-10, VMP-11, VMP-17, VMP-13, and VMP-14 will be monitored for vacuum twice weekly, and vacuum at SVPs will be measured immediately prior to sample collection according to the frequency outlined in **Section 5.2**. The vacuum monitoring network is depicted in **Figure 9.**

Temperature monitoring will be achieved with 120 digiTAM^{TM} temperature sensors in 16 boreholes. This high density of temperature data will be logged in a database and used to visualize subsurface conditions in thermal images.

6.2 SEE System Liquid Samples

Liquid samples will be collected weekly or once every two weeks. The following mid-process locations will be sampled once every two weeks:

- Immediately upstream of the air stripper, at the outlet of the OWS unit (OWS-400). These concentrations will be used to calculate dissolved-phase contaminant mass removal from the subsurface
- Downstream of the air stripper (AS-440)
- Immediately downstream of LGAC-500

The following location will be sampled weekly:

- Immediately downstream of LGAC-510 (post-treatment water, prior to being discharged. This will be the compliance point of the Water Pollution Control Permit).

Liquid samples may also be collected at additional locations but are not required. Liquid samples will be submitted to a commercial laboratory for characterization. See **PFD-01** for locations of liquid samples.

6.3 SEE System Vapor Samples

Two vapor samples will be collected on a bi-weekly frequency for laboratory analysis/confirmation (USEPA Method TO-15 or equivalent) and daily for field screening using a PID. These samples will be collected at the following locations:

- Immediately after the vacuum pumps (B-220A/B), before addition of the air stripper vapor
- Immediately after the vacuum pumps (B-220A/B), after addition of the air stripper vapor (see **PFD-01**).

The lab results will be used to confirm PID results and to provide a quantitative assessment of mass removal rates.

SEE System vapor samples described above will be performed in addition to existing SVE System sampling requirements.

6.4 Mass Recovery

The field data collected with the PID and confirmatory laboratory data will be used to record daily concentration levels in both phases. Totalizers in liquid streams will provide a volumetric record of liquids extracted and processed, while

rotameters and pitot tubes will provide an instantaneous volumetric rate of vapor flow. Liquid and vapor measurements will be recorded at a minimum of 5 times per week (subject to operator scheduling). Mass removal in both liquid and vapor streams is calculated by multiplying concentration and flow calculated/recorded for the period immediately before the concentration reading.

6.5 Progress Reports and Notifications

Monthly progress reports will be submitted to IEPA, per Condition 15 of the 8/22/2022 IEPA letter. Monthly progress reports will include the following:

- Temperature data
- Mass recovery rates, including plots
- Contaminant recovery rates
- Concentrations of organic compounds in the recovered vapor
- Vapor flow rates
- Recovered water/condensate flow rates
- Concentrations of organic compounds in the recovered water
- Steam injection rates
- Electricity (or fuel) consumption
- Energy input data
- Water discharge
- Air emissions
- SVP sample results

IEPA will be notified in the event of a major problem or leak in the SEE system. The first notification will be verbal and within 24 hours of occurrence or discovery of the issue. The second notification will be in writing and will be within 48 hours. The written notice will describe the nature and duration of the problem, and the actions being taken to remediate the problem.

6.6 SEE Shutdown Evaluation

The decision to shut down SEE will be evaluated based on the following criteria, in combination with achieving the minimum target soil temperature of 80.2 °C:

1) Achieve a mass recovery rate of 10% of the peak (over 14 days/4 sampling events).
2) Achieve a linear mass recovery rate curve or decreasing recovery trends using Mann-Kendall analysis[5].
3) ~~Achieve or exceed a temperature of 80°C at 90% of the subsurface sensors within the heated volume, and operate for up to 135 days after target temperatures have been met.~~ Criteria 3 will not be used to evaluate SEE shutdown. It is included here only to keep shutdown criteria numbering consistent with work plan and IEPA 8/22/2022 letter.
4) Class 1 groundwater objectives and other groundwater-related exposure route values are met within the entire dissolved plume within the bounds of the PWY.

There are two scenarios in which SEE may be shut down, which are outlined in IEPA's 8/22/2022 letter, and below:

Scenario 1

- Minimum target soil temperature of 80.2°C is met; and
- Shutdown Criteria 1 is met; and
- Shutdown Criteria 2 is met[6]

Scenario 2

- Minimum target soil temperature of 80.2°C is met; and
- Shutdown Criteria 4 is met

[5] See **Attachment I** for further information regarding Mann-Kendall analysis (Meals, 2011).
[6] The diminishing returns in Criteria 1 and 2 will be presented visually in the Post SEE Shutdown and Completion Report.

7. Waste Management

Investigation derived waste (IDW) from construction activities will be containerized onsite and sampled for characterization (soil will be a composite sample; water will be a grab sample by bailer). The types of IDW are anticipated to be generated during construction activities include, but are not limited to:

- Soil / drilling spoils
- Purge water
- Water used to decontaminate drilling equipment
- Expendable materials (e.g., gloves, tubing, etc.)
- Construction / demolition debris
- PPE

After characterization AECOM will partner with TSDF(s) to create appropriate waste profiles and arrange for transport and disposal. IDW management, transportation and disposal will be in accordance with applicable federal, state, and local regulations. Expendable materials having a low probability of contamination will be collected in trash bags and disposed as municipal waste. Expendable materials with the potential of contamination will be containerized for characterization, transport and disposal, or will be decontaminated and disposed as municipal waste.

8. Post-SEE Activities

8.1 Vapor Extraction

Following the shutdown of steam injection, vapor extraction from MPE wells will continue for at least 30 days. SVP sampling will continue after MPE wells are shut down, in accordance with the schedule described in **Section 5.2**. After MPE wells are closed, existing SVE wells in PWY may be utilized for vapor extraction. Soil vapor in the vadose zone will continue to be monitored in the vicinity of PWY groundwater monitoring wells that exceed the values in 35 IAC Part 742, Appendix B, Table H (IEPA, 2013b). If soil vapor near applicable PWY monitoring well(s) exceeds values in the aforementioned Table H, the nearest SVE well(s) can be utilized to start vapor extraction.

Based upon the results observed during and after SEE operation, a proposal for SVE shutdown and rebound monitoring may be submitted post-SEE shutdown, as discussed in the *Response to TACO Tier 3 Demonstration 10/1/2020 IEPA Comment* Letter (IEPA, 2020; AECOM, 2022b).

8.2 Groundwater Treatment

In accordance with Section IV of the Part B Permit, the refinery groundwater control system maintains hydraulic control in the form of an inward gradient toward the interior of the WRR. This hydraulic control extends to the PWY groundwater dissolved phase plume and is steadily pulling the plume eastward into the refinery (as shown in the quarterly Roxana Interim Groundwater Monitoring Reports and **Figure 10**). The refinery's groundwater control system will operate during SEE operation, will continue to operate after the SEE system is shut down, and will address any remaining dissolved phase impacts in the PWY while maintaining an inward hydraulic gradient toward the WRR interior.

8.3 Demobilization

SEE infrastructure will be removed following shutdown of the SEE system. Because vapor extraction via MPE wells will continue for at least 30 days after the halting of steam injection, system components related to vapor extraction will remain in place until after the MPE wells are turned off. SVP sampling will continue until subsurface temperatures have returned to ambient conditions, at which point the SVPs will be abandoned.

Demobilization will include the following tasks:

1. Disconnect all electrical connections
2. Disconnect and dismantle steam boiler circulation system
3. Remove the treatment system
4. Disconnect and dismantle the surface facilities
5. Demobilization of recoverable equipment from the site
6. Perform site restoration activities

9. References

AECOM, 2017 (AECOM, 2017); TACO Tier 3 Demonstration Part 1: Site Characterization Summary; Prepared for Shell Oil Products US (Shell); dated April 6, 2017.

AECOM, 2020 (AECOM, 2020); Response to Condition 4.b in Attachment A and Condition V.D.3 of the 12/20/2019 IEPA Letter with Modified Permit. Prepared for Shell Oil Products US (Shell); dated October 12, 2020.

AECOM, 2022 (AECOM, 2022a); Public Works Yard Steam Enhanced Extraction Workplan. Prepared for Shell Oil Products US (Shell); dated January 31, 2022.

AECOM, 2022 (AECOM, 2022b); TACO Tier 3 Demonstration: Response to 10/1/2020 IEPA Comment Letter; Prepared for Shell Oil Products US (Shell); dated January 4, 2022.

Illinois Environmental Protection Agency, 2010 (IEPA, 2010); *Hazardous Waste Management RCRA Post-Closure Permit.* Issued to Shell Oil Products US (Shell) at the WRB Refining LP Wood River Refinery (WRB WRR), issued September 23, 2010; effective October 28, 2010; modified April 2, 2013; modified June 13, 2014; modified November 25, 2014; modified July 29, 2015; modified December 20, 2019; modified March 28, 2022; modified October 31, 2022.

Illinois Environmental Protection Agency (IEPA), 2013; (IEPA, 2013a); Tiered Approach to Corrective Action Objectives Title 35 – Part 742; Appendix A, Table A: Soil Saturation Limits (C_{sat}) for Chemicals Whose Melting Point is Less Than 30°C. Effective July 15, 2013.

Illinois Environmental Protection Agency (IEPA), 2013; (IEPA, 2013b); Tiered Approach to Corrective Action Objectives Title 35 – Part 742; Appendix B, Table H: Tier 1 Soil Gas and Groundwater Remediation Objectives for the Indoor Inhalation Exposure Route – Diffusion and Advection. Effective July 15, 2013.

Illinois Environmental Protection Agency (IEPA), 2020; (IEPA, 2020); Response to April 6, 2017, July 14, 2017, and November 22, 2017 submittals. Issued to Shell Oil Products US (Shell), dated October 1, 2020.

Illinois Environmental Protection Agency (IEPA), 2022; (IEPA, 2022); Response to Public Works Yard Steam Enhanced Extraction Workplan. Issued to Shell Oil Products US (Shell), dated August 22, 2022.

Meals, Donald W.; Spooner, Jean; Dressing, Steven A.; and Harcum, Jon B. 2011; (Meals, 2011). Statistical analysis for monotonic trends, Tech Notes 6, November 2011. Developed for U.S. Environmental Protection Agency by Tetra Tech, Inc., Fairfax, VA, 23 p. Available online at *https://www.epa.gov/polluted-runoff-nonpoint-source-pollution/nonpoint-source-monitoringtechnical-notes*.

URS Corporation (URS), 2007; West Fenceline P-93 Dissolved Phase Benzene Investigation Report-Roxana, Illinois; Prepared for Shell Oil Products US (SOPUS); dated September 2007.

Figures

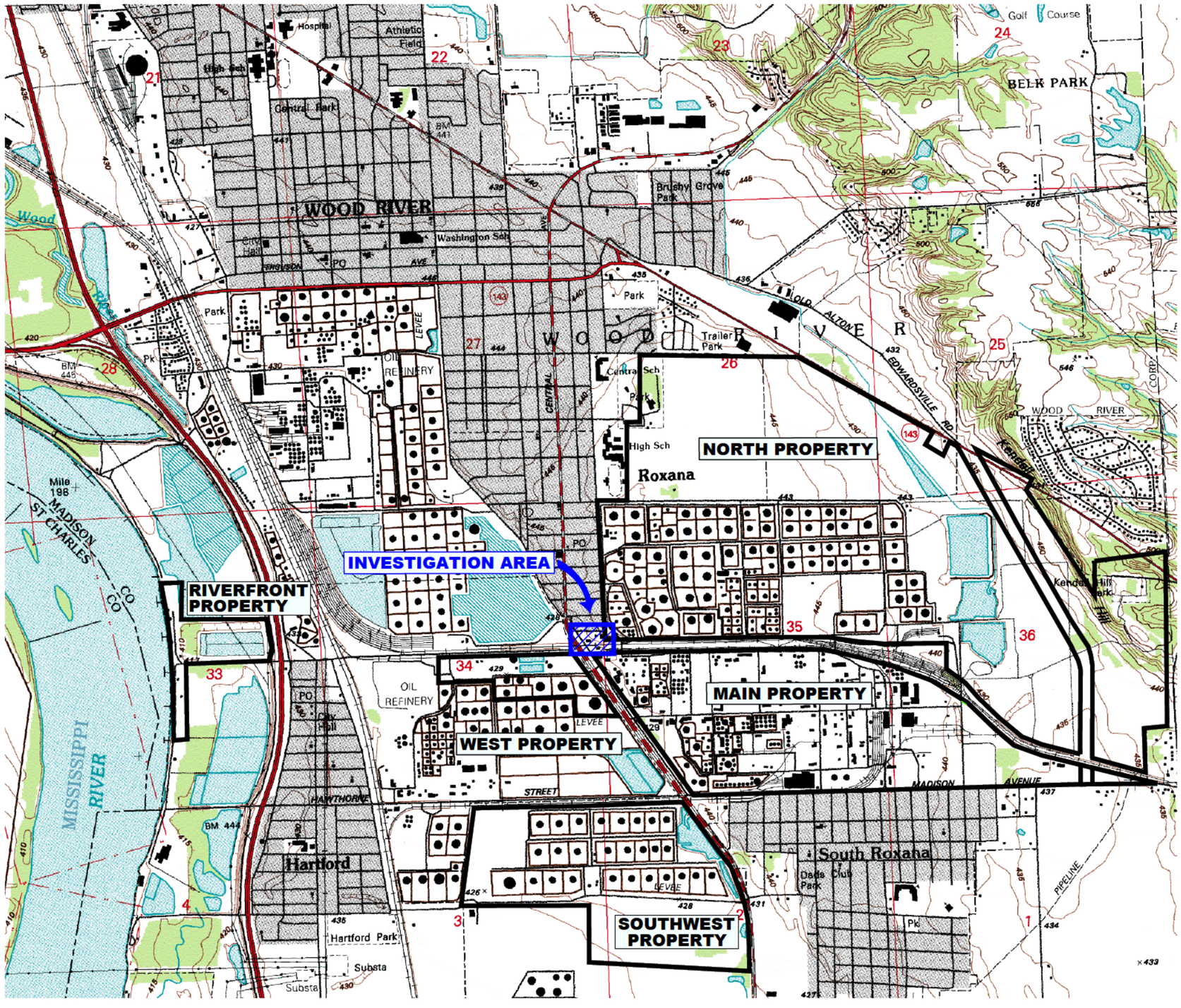

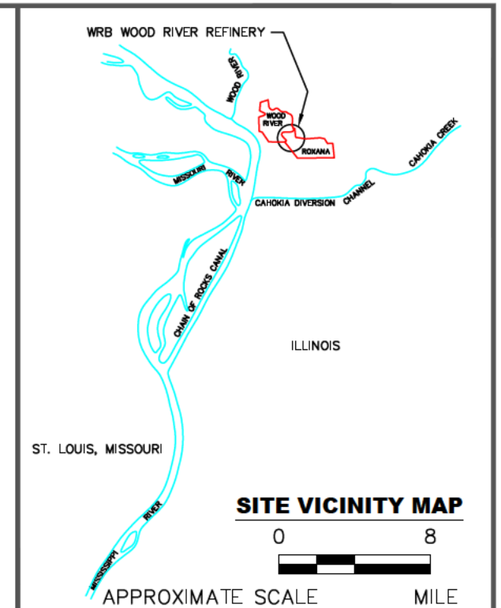

LEGEND

- WOOD RIVER REFINERY PROPERTY BOUNDARY
- INVESTIGATION AREA

SOURCE: ELECTRONIC USGS DIGITAL RASTER GRAPHIC 7.5 MINUTE TOPOGRAPHIC MAP OF WOOD RIVER, IL–MO REVISED 1994.

0 2000

APPROXIMATE SCALE FEET

N

PUBLIC WORKS YARD STEAM ENHANCED EXTRACTION FINAL DESIGN REPORT ROXANA, ILLINOIS		PROJECT NO. 60674381
AECOM		
DRN. BY: bah OCT 2022 DSGN. BY: djd CHKD. BY: bj	Old Public Works Yard Location Map	FIG. NO. 1

File: C:\USERS\BRETT.HOWELL\ONEDRIVE - AECOM\DOCUMENTS\PUBLIC WORKS\PUBLIC WORKS 2022\FIGURES (CAD)\PWY SEE FIG 1 - LOCATION MAP - 10.31.22.DWG Last edited: 10/31/22 @ 10:18 AM @ WCC-ST.LOUIS

INTEGRATED REMEDIATION PLAN

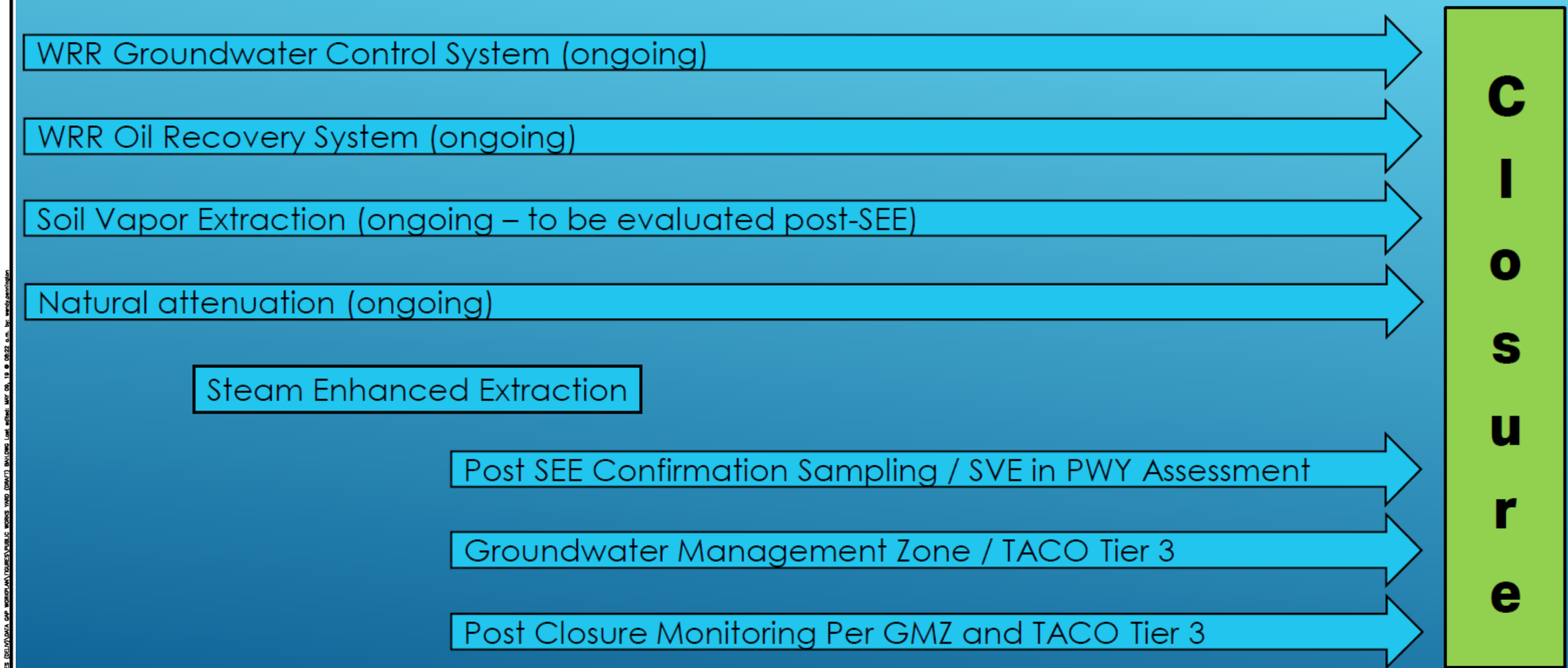

PUBLIC WORKS YARD STEAM ENHANCED EXTRACTION FINAL DESIGN REPORT ROXANA, ILLINOIS	PROJECT NO. 60674381

DRN. BY: bah Oct 2022 DSGN. BY: djd CHKD. BY: wmp	Integrated Remediation Plan	FIG. NO. 2

V:\Projects_Proj\Shell\St Louis\EVS\2022-10-26_benzene_soil_580mgkg.ai

PLAN VIEW

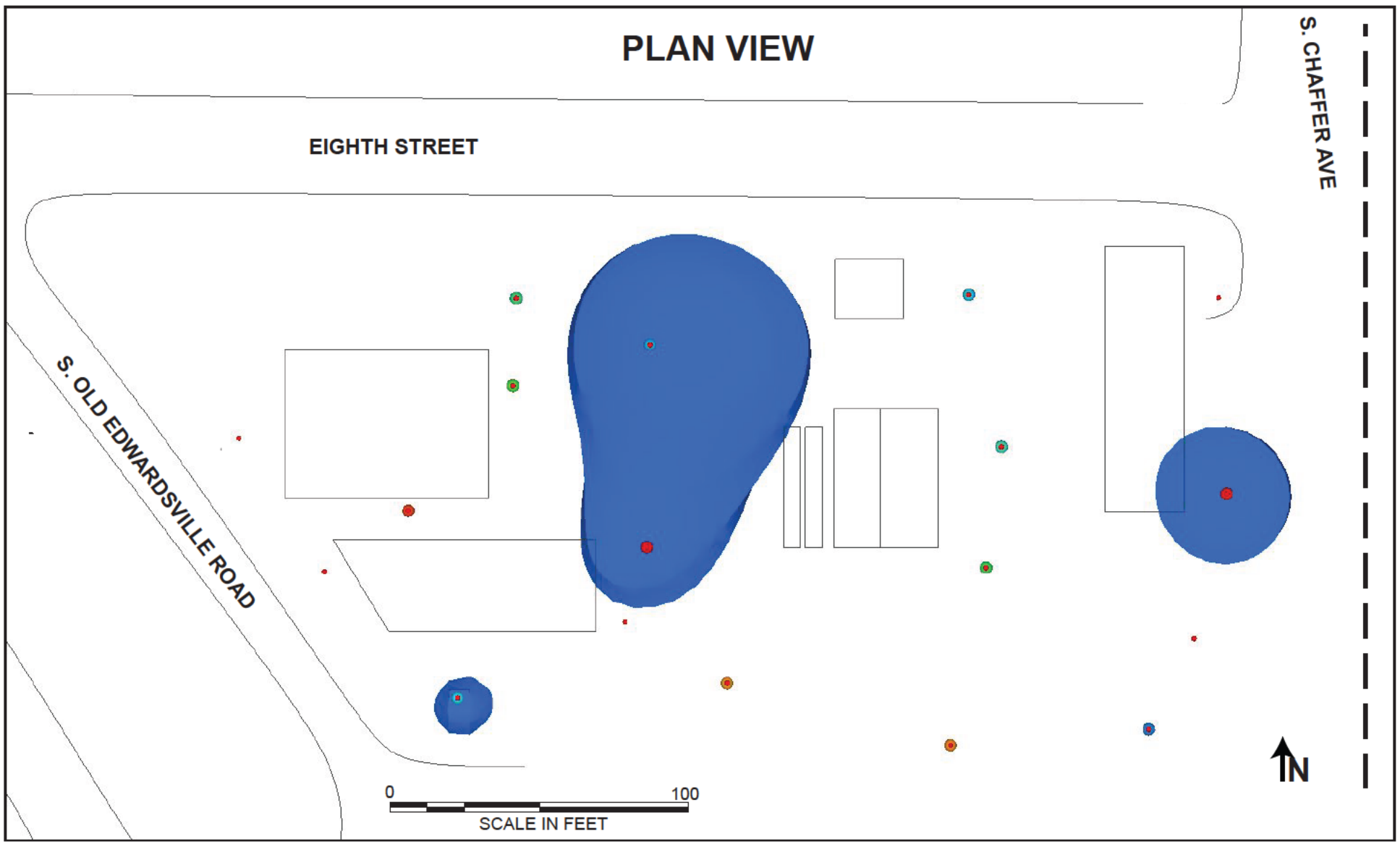

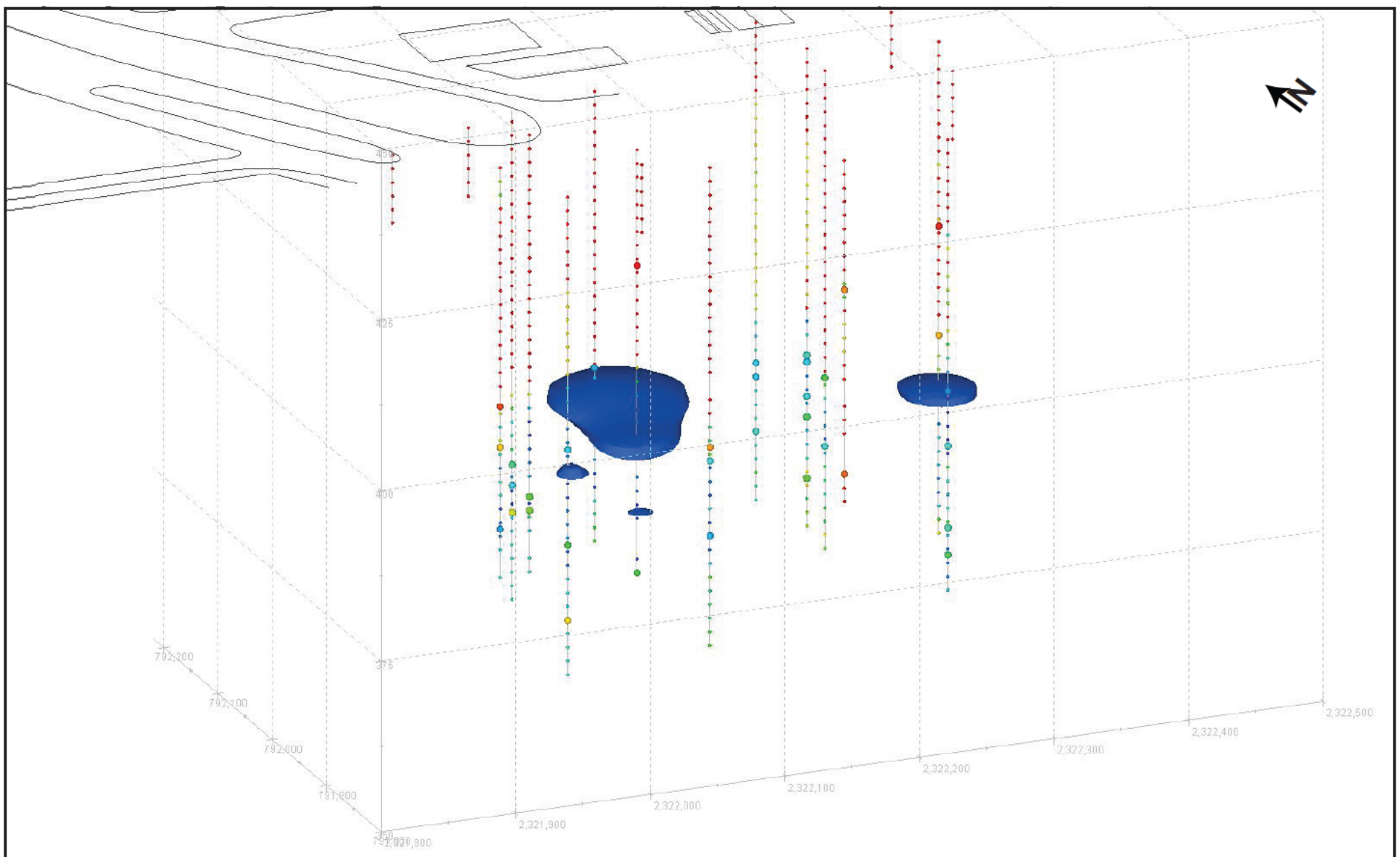

OBLIQUE VIEW TOWARDS THE NORTHWEST

EXPLANATION

Benzene in Soil (mg/kg)

- 23,000
- 10,000
- 3,000
- 1,000
- 300
- 100
- 30
- 10
- 3
- 1
- 0.3
- 0.1
- 0.03
- 0.01

NOTES

NAVD North American Vertical Datum
mg/kg milligrams per kilogram

1. Benzene in soil was modeled using the Krig Statistic's method in CTECH's Earth Volumetric Studio (EVS), version 2019.2. Benzene data is from 2019 Predesign Investigation

2. For the purposes of this figure, the ground surface is modeled as a plane at elevation 450 NAVD 88.

3. The oblique image is at azimuth 202 and 20 degree inclination.

4. The incrementally spaced spheres observed on the Oblique view image, indicate PID field measurements recorded during 2019 Predesign Investigation.

5. Dark blue portions indicate areas where benzene in soil exceeds 580 mg/kg.

PUBLIC WORKS YARD STEAM ENHANCED EXTRACTION FINAL REPORT ROXANA, ILLINOIS	PROJECT NO. 60674381
AECOM	
BENZENE IN SOIL >580mg/kg; MODEL OUTPUT	FIG. NO. 3

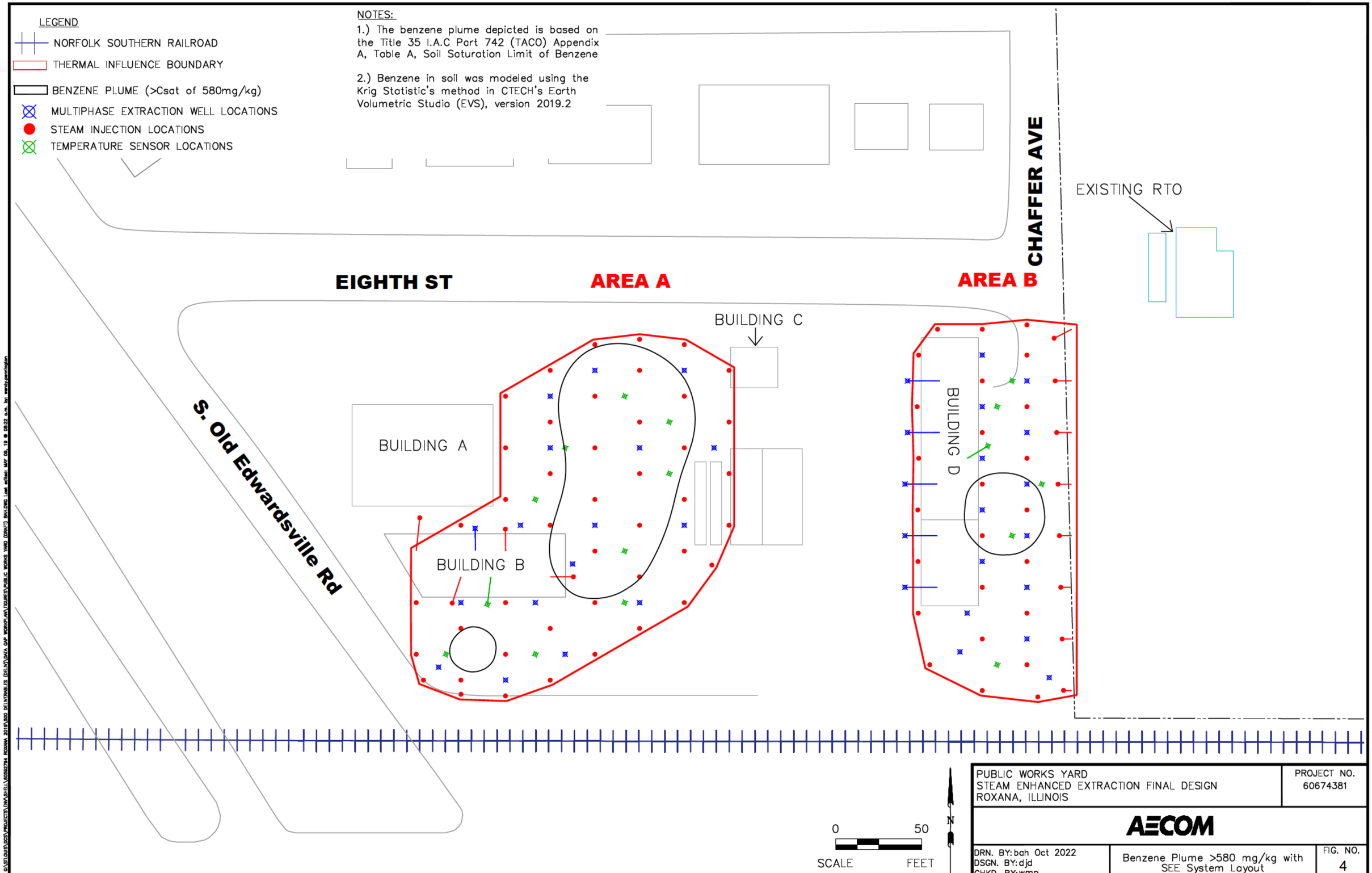

PUBLIC WORKS YARD
STEAM ENHANCED EXTRACTION FINAL DESIGN
ROXANA, ILLINOIS

PROJECT NO. 60674381

AECOM

DRN. BY: bah Oct 2022
DSGN. BY: djd
CHKD. BY: wmp

Benzene Plume >580 mg/kg with SEE System Layout

FIG. NO. 4

LEGEND

- NORFOLK SOUTHERN RAILROAD
- EXISTING WELL LOCATION (SVE-##; MW-##; VMP-##)
- STEAM VAPOR MONITORING POINT (SVP)
- WELL LOCATIONS TO BE ABANDONED PRIOR TO SEE
- SEE SYSTEM RADIUS OF CAPTURE
- THERMAL INFLUENCE BOUNDARY

NOTES:

1.) VMP-29, VMP-30, MW-8, AND SVE-2 WILL BE ABANDONED PRIOR TO THE START OF SEE OPERATION.

EIGHTH ST

CHAFFER AVE

S. Old Edwardsville Rd

SVP-01 SVP-02 SVP-03 SVP-04 SVP-05 SVP-06 SVP-07 SVP-08 SVP-09 SVP-10 SVP-11 SVP-12 SVP-13 SVP-14

SVE-2 SVE-19 SVE-20 SVE-21 SVE-22 SVE-23 SVE-24 SVE-26 SVE-27 SVE-36

VMP-29 VMP-30 VMP-9 VMP-10 VMP-11 VMP-12 VMP-13 VMP-14 VMP-17 VMP-18 VMP-41 VMP-53 VMP-55 VMP-65

MW-5 MW-7 MW-8 MW-25

P-58 P-93A P-93B P-93C P-93D

SVE SYSTEM

0 50

SCALE FEET

N

PUBLIC WORKS YARD STEAM ENHANCED EXTRACTION FINAL DESIGN REPORT ROXANA, ILLINOIS		PROJECT NO. 60674381
AECOM		
DRN. BY: bah Oct 2022 DSGN. BY: djd CHKD. BY: wmp	SVP LOCATIONS AND EXISTING WELL LOCATIONS	FIG. NO. 5

LEGEND

- NORFOLK SOUTHERN RAILROAD
- THERMAL INFLUENCE BOUNDARY
- GROUNDWATER SAMPLING LOCATIONS
- SOIL SAMPLING LOCATIONS
- SOIL GAS SAMPLING LOCATIONS

NOTES:

1.) SVP-07 and SVP-08 borings will be sampled for groundwater to a depth of approx. 80 ft bgs before installation.
2.) The SVP locations will be soil sampled during installation.
3.) Some locations will be sampled for multiple media types. Such locations have multiple labels that are color-coded according to the legend to indicate media type.
4.) Locations depicted here will be sampled prior to the start of SEE operation.

CHAFFER AVE

EIGHTH ST

S. Old Edwardsville Rd

SVP-08 SVP-09 SVP-10 SVP-11 SVP-12 SVP-13 SVP-14 SVP-07

SVP-01 SVP-02 SVP-03 SVP-04 SVP-05 SVP-06

SI-AA3 SI-AA1 X-AB4 X-AA2 SI-AD6 X-AC5 SI-AC4 SI-AB1 X-AB1 SB-101 SI-AE6 X-AD5 SI-AD4 X-AC3 X-AC3 SI-AH5 X-AF6 X-AF6 X-AE4 X-AE4 SI-AD2 X-AD2 X-AG7 SI-AE1 SB-102 X-AF4 X-AF3 X-AH7 X-AG5 X-AG5 SI-AG3 SI-AI7 X-AH5 X-AJ8 X-AJ8 X-AI6 SI-AJ6

SI-BG1 X-BH2 SI-BI4 SI-BG2 X-BG1 X-BH3 X-BG2 X-BF1 X-BF1 SI-BG4 X-BG3 X-BF2 SI-BE2 X-BE1 X-BF3 GWP-101 X-BE2 SI-BD2 SI-BE4 X-BD1 X-BD1 X-BE3 X-BD2 X-BD3 X-BC1 X-BD3 SI-BB1 X-BC2 X-BC3 X-BB2 X-BB2 X-BB3 X-BB3

0 50
SCALE FEET

N

PUBLIC WORKS YARD STEAM ENHANCED EXTRACTION FINAL DESIGN REPORT ROXANA, ILLINOIS		PROJECT NO. 60674381
AECOM		
DRN. BY: bah Oct 2022 DSGN. BY: djd CHKD. BY: wmp	SOIL GAS, SOIL, AND GROUNDWATER SAMPLING LOCATIONS – PRE SEE	FIG. NO. 6

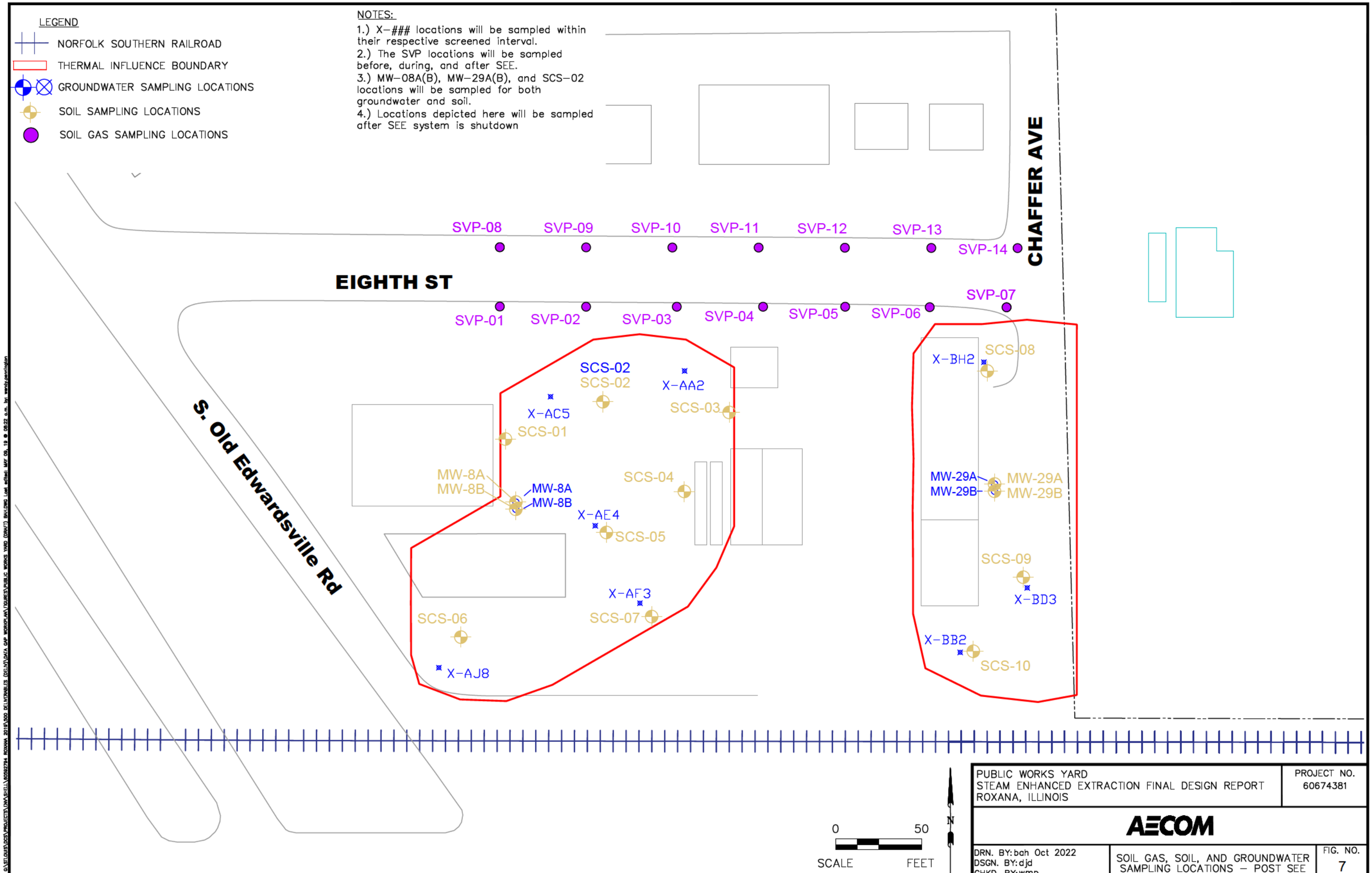

PUBLIC WORKS YARD
STEAM ENHANCED EXTRACTION FINAL DESIGN REPORT
ROXANA, ILLINOIS

PROJECT NO. 60674381

AECOM

DRN. BY: bah Oct 2022
DSGN. BY: djd
CHKD. BY: wmp

SOIL GAS, SOIL, AND GROUNDWATER SAMPLING LOCATIONS – POST SEE

FIG. NO. 7

LEGEND

- SEE SYSTEM RADIUS OF CAPTURE
- THERMAL INFLUENCE BOUNDARY
- NORFOLK SOUTHERN RAILROAD
- STEAM VAPOR POINT (SVP)
- MULTIPHASE EXTRACTION WELL
- STEAM INJECTION WELL
- TEMPERATURE SENSOR
- UNDERGROUND WATER LINE
- UNDERGROUND AMEREN ELECTRIC LINE
- UNDERGROUND COMMUNICATIONS LINE
- UNDERGROUND BUCKEYE PIPELINE
- UNDERGROUND SEWER LINE
- UNCONFIRMED UNDERGROUND SEWER LINE
- UNDERGROUND AMEREN NATURAL GAS LINE

NOTES:

1.) SEE RADIUS OF CAPTURE IS APPROX. 70 FT ON CENTER FROM EACH MULTIPHASE EXTRACTION WELL

2.) DETAILED UNDERGROUND UTILITIES WERE IDENTIFIED DURING THE 2019 PREDESIGN INVESTIGATION. ADDITIONAL UTILITY LOCATE WILL BE PERFORMED PRIOR TO DRILLING ACTIVITIES AT THE PWY

EIGHTH ST

S. Old Edwardsville Rd

CHAFFER AVE

EXISTING RTO

AREA A

AREA B

Equipment Staging Area

SVP-01 SVP-02 SVP-03 SVP-04 SVP-05 SVP-06 SVP-07 SVP-08 SVP-09 SVP-10 SVP-11 SVP-12 SVP-13 SVP-14

SI-AA1 SI-AA2 SI-AA3 SI-AB1 SI-AB2 SI-AB3 SI-AB4 SI-AC1 SI-AC2 SI-AC3 SI-AC4 SI-AC5 SI-AD1 SI-AD2 SI-AD3 SI-AD4 SI-AD5 SI-AD6 SI-AE1 SI-AE2 SI-AE3 SI-AE4 SI-AE5 SI-AE6 SI-AF2 SI-AF3 SI-AF4 SI-AF5 SI-AF6 SI-AG3 SI-AG5 SI-AG6 SI-AG7 SI-AH5 SI-AH6 SI-AH7 SI-AI5 SI-AI6 SI-AI7 SI-AI8 SI-AJ6 SI-AJ7 SI-AJ8 SI-AK7 SI-AK8 SI-1C3 SI-1H4 SI-1I6

X-AA2 X-AB1 X-AB4 X-AC5 X-AD5 X-AE4 X-AF4 X-AF6 X-AG5 X-AG7 X-AH7 X-AI6 X-AJ8 X-AF3

T-AB2 T-AB3 T-AD5 T-AE5 T-AF3 T-AG6 T-AH5 T-AI7

SI-BA1 SI-BA2 SI-BA3 SI-BB1 SI-BB2 SI-BB3 SI-BB4 SI-BC1 SI-BC2 SI-BC3 SI-BC4 SI-BD1 SI-BD2 SI-BD3 SI-BD4 SI-BE1 SI-BE2 SI-BE3 SI-BE4 SI-BF1 SI-BF2 SI-BF3 SI-BF4 SI-BG1 SI-BG2 SI-BG3 SI-BG4 SI-BH1 SI-BH2 SI-BH3 SI-BH4 SI-BI3 SI-BI4

X-BB2 X-BB3 X-BC1 X-BC3 X-BD1 X-BD3 X-BE1 X-BE3 X-BF1 X-BF2 X-BG1 X-BG2 X-BH3

T-BB2 T-BE3 T-BF2 T-BF3 T-BG2 T-BH3

0 50

SCALE FEET

N

PUBLIC WORKS YARD STEAM ENHANCED EXTRACTION FINAL DESIGN REPORT ROXANA, ILLINOIS	PROJECT NO. 60674381
AECOM	
DRN. BY: bah OCT 2022 DSGN. BY: djd CHKD. BY: wmp	SEE SYSTEM RADIUS OF CAPTURE WITH SVP MONITORING NETWORK AND UNDERGROUND UTILITIES
	FIG. NO. 8

File: G:\STUDY\USGS\PROJECTS\ROXANA\PHASE II\60622794 ROXANA 2018\300 DELIVERABLES (DJD)\MXD\FIG 8 SEE WORKING\FIGURES\PUBLIC WORKS YARD (DRAFT) BAH.DWG Last edited: MAY 09, 19 @ 08:22 a.m. by wendy.pennington

LEGEND

NORFOLK SOUTHERN RAILROAD

EXISTING VAPOR MONITORING POINT (VMP)

STEAM VAPOR MONITORING POINT (SVP)

SEE SYSTEM RADIUS OF CAPTURE

NOTES:

1.) SVP Locations will be installed prior to start of SEE operation.

SVP-08 SVP-09 SVP-10 SVP-11 SVP-12 SVP-13 SVP-14

SVP-01 SVP-02 SVP-03 SVP-04 SVP-05 SVP-06 SVP-07

EIGHTH ST

CHAFFER AVE

S. Old Edwardsville Rd

VMP-41 VMP-10 VMP-11 VMP-17 VMP-13 VMP-14

0 50

SCALE FEET

N

PUBLIC WORKS YARD STEAM ENHANCED EXTRACTION FINAL DESIGN REPORT ROXANA, ILLINOIS		PROJECT NO. 60674381
AECOM		
DRN. BY: bah Oct 2022 DSGN. BY: djd CHKD. BY: wmp	SUBSURFACE VACUUM MONITORING NETWORK	FIG. NO. 9

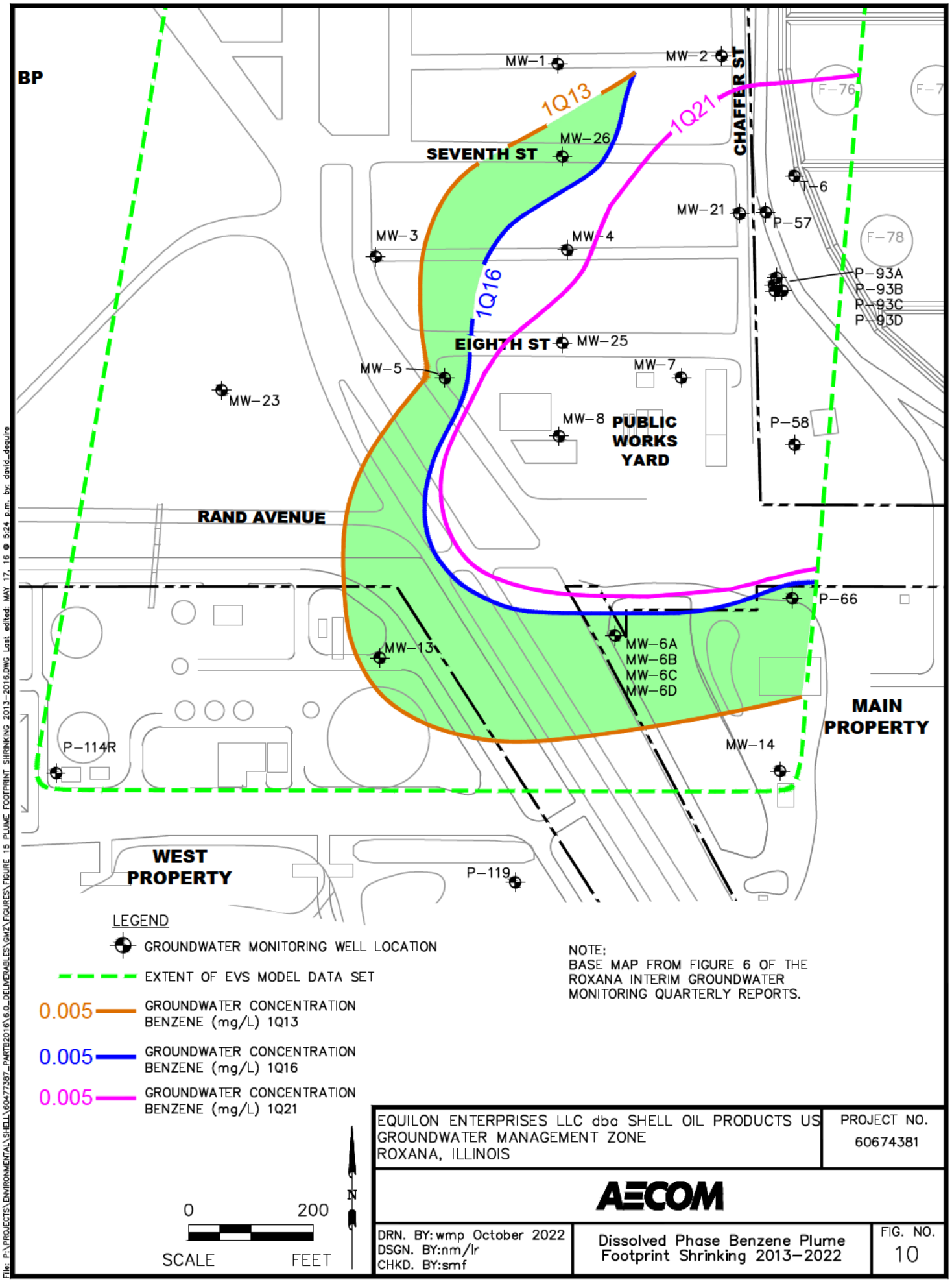

File: P:\PROJECTS\ENVIRONMENTAL\SHELL\60477387_PART82016\6.0_DELIVERABLES\GMZ\FIGURES\FIGURE 15 PLUME FOOTPRINT SHRINKING 2013-2016.DWG Last edited: MAY 17, 16 @ 5:24 p.m. by: david_deguire

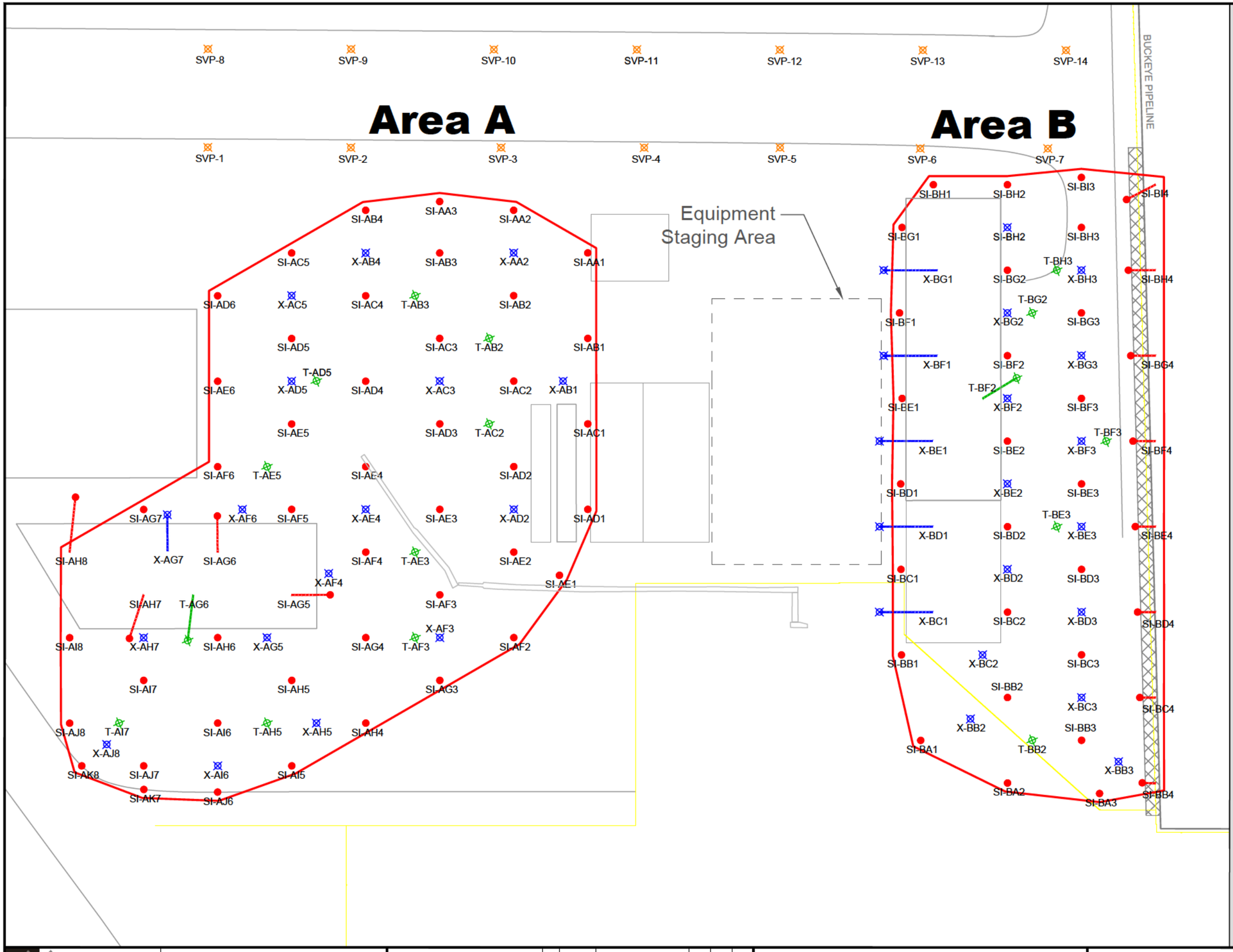

LEGEND

Area A
- Steam Injection Well [48]
- Multiphase Extraction Well [17]
- Temperature Sensor Well [10]
- Thermal Influence (28,060 sq. ft)

Area B
- Steam Injection Well [33]
- Multiphase Extraction Well [19]
- Temperature Sensor Well [6]
- Thermal Influence (20,144 sq. ft)

General
- Buckeye Pipeline
- 5 ft Pipeline Drilling Offset
- Vapor Monitoring Well [14]

NOTES:

1. STEAM WELLS REQUIRE MIN. 4" BORING.
2. EXTRACTION WELLS REQUIRE MIN. 8" BORING.
3. SENSOR WELLS REQUIRE MIN. 4" BORING.
4. PIPELINE LOCATION PROVIDED BY AECOM.
5. VAPOR MONITORING POINTS TO BE INSTALLED BY OTHERS.

N

0 25 50
SCALE IN FEET

McMILLAN-McGEE CORP.
ELECTROMAGNETIC SYSTEMS AND SERVICES FOR THE ENERGY AND ENVIRONMENTAL INDUSTRIES
4895 - 35B STREET SE
CALGARY, AB T2B 3M9 CANADA
WWW.MCMILLAN-MCGEE.COM
PH: 403.569.5100, FX: 403.272.7201

LPE

DATE

REV.	DATE (D/M/Y)	DESCRIPTION	DRAWN BY	ORG/ ENGR	Aproved Dist.
C2	2022/10/28	100% RDR ADDENDUM	JS	JS	CC
C1	2022/01/07	100% DESIGN	JS	CC	CC
B5	2021/12/02	FINALIZE TREATMENT AREA B	JS	CC	CC
B4	2021/10/29	INCORPORATE 90% COMMENTS	JS	CC	CC
B3	2021/09/28	90% DESIGN	JS	CC	CC
B2	2021/09/03	MOVED SI-AA3	JS	CC	CC

APEGA PERMIT NUMBER: P09178 — SCALE: NOT TO SCALE

TITLE: **Well Field Layout**

CLIENT: **AECOM**

PROJECT: **Roxana Public Works Yard**
Roxana, Illinois

SHEET: **WFL-01**

NOTES:

1. EXACT LOCATION OF EQUIPMENT TO BE DETERMINED BASED ON SITE CONDITIONS DETERMINED DURING INSTALLATION.

GEN

OFFICE WORK SHED BUILDING

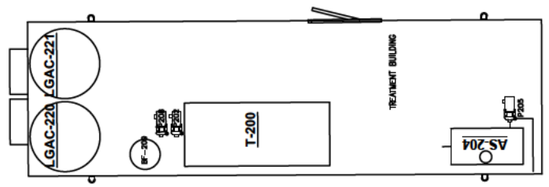

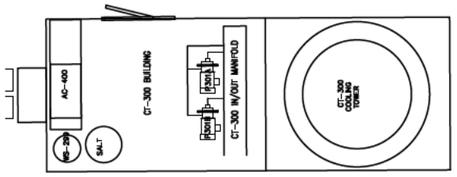

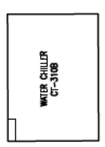

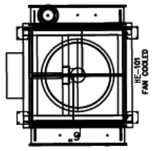

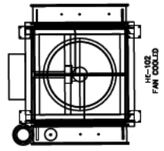

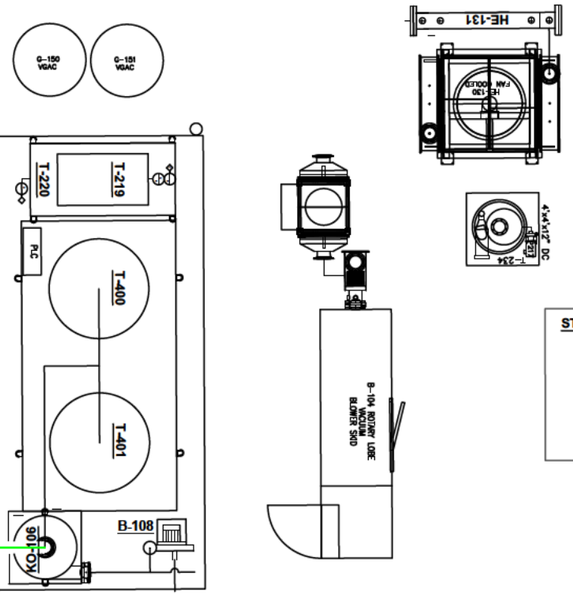

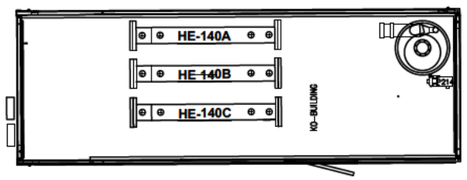

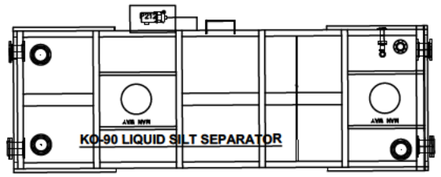

STEAM BOILER

N

0 10 20

SCALE IN FEET

McMILLAN-McGEE CORP.

ELECTROMAGNETIC SYSTEMS AND SERVICES FOR THE ENERGY AND ENVIRONMENTAL INDUSTRIES

4895 - 35B STREET SE
CALGARY, AB T2B 3M9 CANADA

WWW.MCMILLAN-MCGEE.COM
PH: 403.569.5100, FX: 403.272.7201

LPE

DATE

REV.	DATE (D/M/Y)	DESCRIPTION	DRAWN BY	ORIG/ ENGR	Approved Dist
C2	2022/10/28	100% RDR ADDENDUM	JS	JS	CC
C1	2022/01/07	100% DESIGN	JS	CC	CC
B4	2021/12/02	FINALIZE TREATMENT AREA B	JS	CC	CC
B3	2021/10/29	INCORPORATE 90% COMMENTS	JS	CC	CC
B2	2021/09/28	90% DESIGN	JS	CC	CC
B1	2021/08/27	60% DESIGN	JS	CC	CC

APEGA PERMIT NUMBER: P09178

SCALE: NOT TO SCALE

TITLE: **Equipment Layout**

CLIENT: **AECOM**

PROJECT: **Roxana Public Works Yard**
Roxana, Illinois

SHEET: **EQL-01**

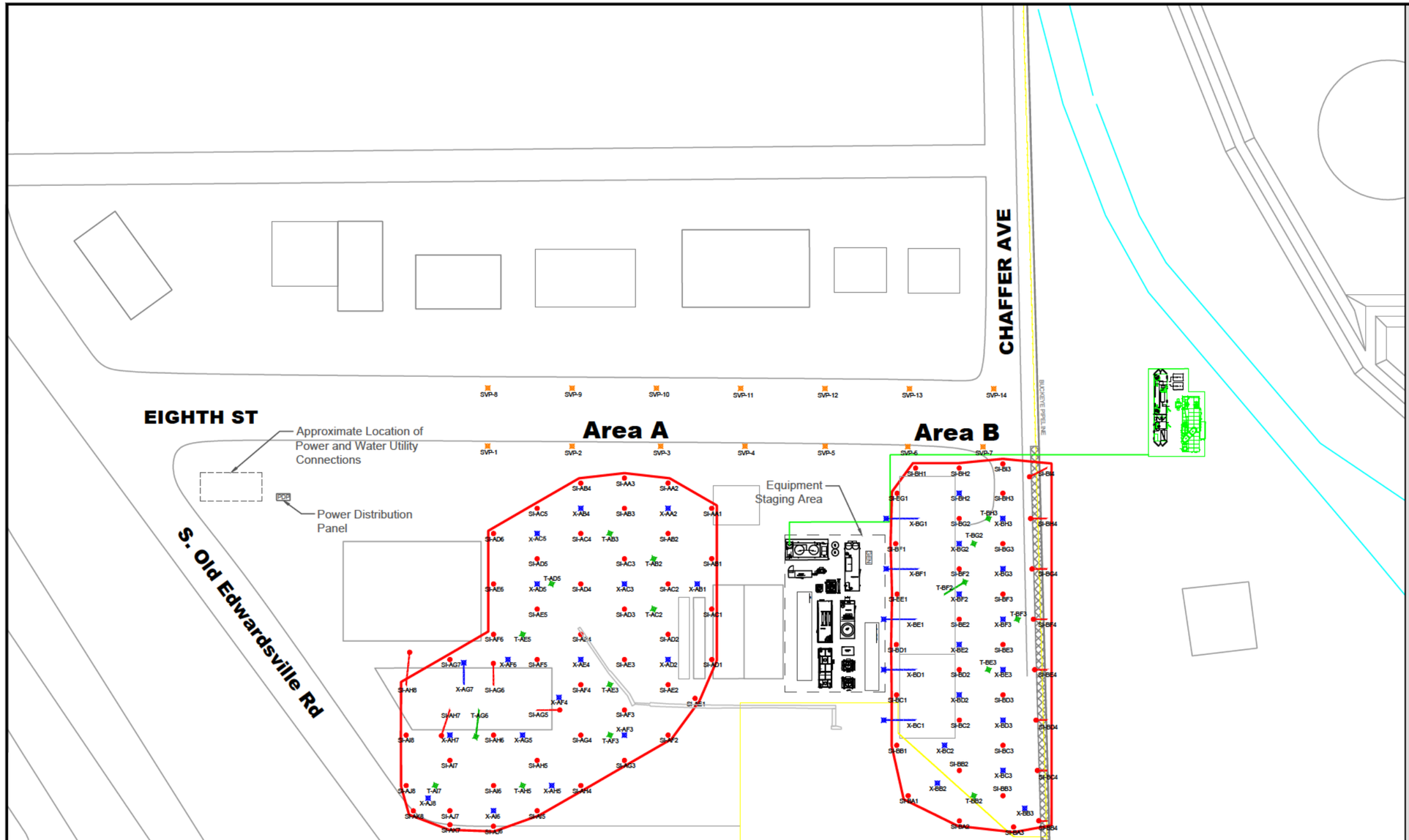

LEGEND

Area A
- Steam Injection Well [48]
- Multiphase Extraction Well [17]
- Temperature Sensor Well [10]
- Thermal Influence (28,060 sq. ft)

Area B
- Steam Injection Well [33]
- Multiphase Extraction Well [19]
- Temperature Sensor Well [6]
- Thermal Influence (20,144 sq. ft)

General
- Buckeye Pipeline
- 5 ft Pipeline Drilling Offset
- Vapour Monitoring Well [14]
- 8" Conveyance Piping to RTO

NOTES:

1. STEAM WELLS REQUIRE MIN. 4" BORING.
2. EXTRACTION WELLS REQUIRE MIN. 8" BORING.
3. SENSOR WELLS REQUIRE MIN. 4" BORING.
4. PIPELINE LOCATION PROVIDED BY AECOM.
5. VAPOR MONITORING POINTS TO BE INSTALLED BY OTHERS.

N

0 50 100
SCALE IN FEET

McMILLAN-McGEE CORP.
ELECTROMAGNETIC SYSTEMS AND SERVICES FOR THE ENERGY AND ENVIRONMENTAL INDUSTRIES
4895 - 35B STREET SE
CALGARY, AB T2B 3M9 CANADA
WWW.MCMILLAN-MCGEE.COM
PH: 403.569.5100, FX: 403.272.7201

LPE

DATE

REV.	DATE (D/M/Y)	DESCRIPTION	DRAWN BY	ORG/ ENGR	Aproved Dist
C2	2022/10/28	100% RDR ADDENDUM	JS	JS	CC
C1	2022/01/07	100% DESIGN	JS	CC	CC
B6	2021/12/02	FINALIZE TREATMENT AREA B	JS	CC	CC
B4	2021/10/29	INCORPORATE 90% COMMENTS	JS	CC	CC
B3	2021/09/28	90% DESIGN	JS	CC	CC
B2	2021/09/03	MOVED SI-AA3	JS	CC	CC

APEGA PERMIT NUMBER: P09178 — SCALE: NOT TO SCALE

TITLE: **Equipment Layout**

CLIENT: **AECOM**

PROJECT: **Roxana Public Works Yard**
Roxana, Illinois

SHEET: **EQL-02**

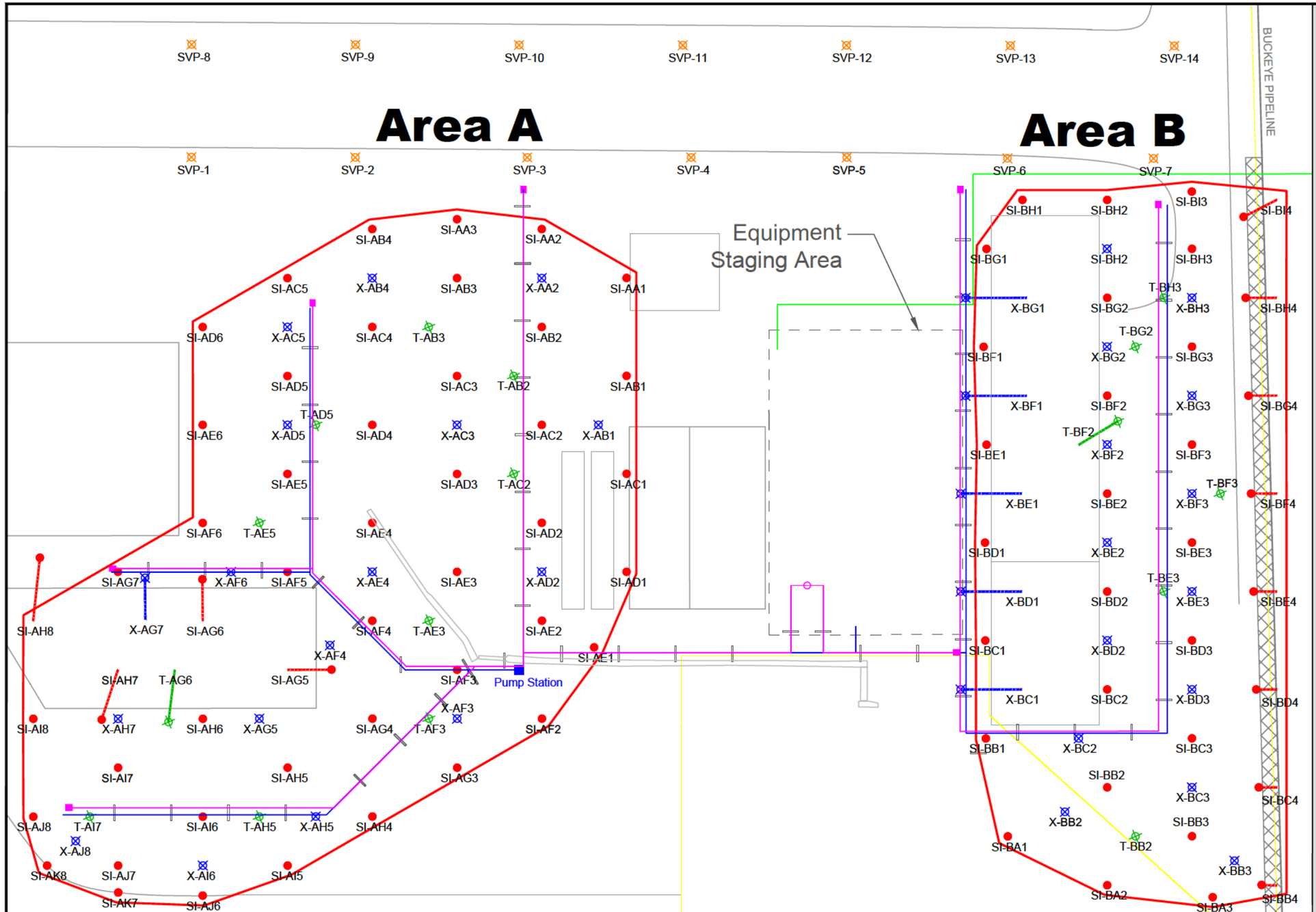

LEGEND

Area A
- Steam Injection Well [48]
- Multiphase Extraction Well [17]
- Temperature Sensor Well [10]
- Thermal Influence (28,060 sq. ft)

Area B
- Steam Injection Well [33]
- Multiphase Extraction Well [19]
- Temperature Sensor Well [6]
- Thermal Influence (20,144 sq. ft)

General
- Buckeye Pipeline
- 5 ft Pipeline Drilling Offset
- Vapor Monitoring Well [14]
- Vapour Extraction Piping
- Steam Piping
- Pipe Stands [57]
- Steam Traps [8]
- 8" Conveyance Piping to RTO

NOTES:

1. STEAM WELLS REQUIRE MIN. 4" BORING.
2. EXTRACTION WELLS REQUIRE MIN. 8" BORING.
3. SENSOR WELLS REQUIRE MIN. 4" BORING.
4. PIPELINE LOCATION PROVIDED BY AECOM.
5. VAPOR MONITORING POINTS TO BE INSTALLED BY OTHERS.

N

0 25 50
SCALE IN FEET

McMILLAN-McGEE CORP.

ELECTROMAGNETIC SYSTEMS AND SERVICES FOR THE ENERGY AND ENVIRONMENTAL INDUSTRIES

4895 - 35B STREET SE
CALGARY, AB T2B 3M9 CANADA

WWW.MCMILLAN-MCGEE.COM
PH: 403.569.5100, FX: 403.272.7201

LPE

DATE

REV.	DATE (D/M/Y)	DESCRIPTION	DRAWN BY	ORG/ ENGR	Aproved Dist.
C2	2022/10/28	100% RDR ADDENDUM	JS	JS	CC
C1	2022/01/07	100% DESIGN	JS	CC	CC
B6	2021/12/02	FINALIZE TREATMENT AREA B	JS	CC	CC
B4	2021/10/29	INCORPORATE 90% COMMENTS	JS	CC	CC
B3	2021/09/28	90% DESIGN	JS	CC	CC
B2	2021/09/03	UPDATE PIPING LAYOUT	JS	CC	CC

APEGA PERMIT NUMBER: P09178 — SCALE: NOT TO SCALE

TITLE: **Piping Layout**

CLIENT: **AECOM**

PROJECT: **Roxana Public Works Yard**
Roxana, Illinois

SHEET: **PIL-01**

AREA A

DIGITAM™ TEMPERATURE SENSOR WELL QUANTITY - 9

STEAM INJECTION WELL QUANTITY - 44

MULTIPHASE EXTRACTION WELL QUANTITY - 16

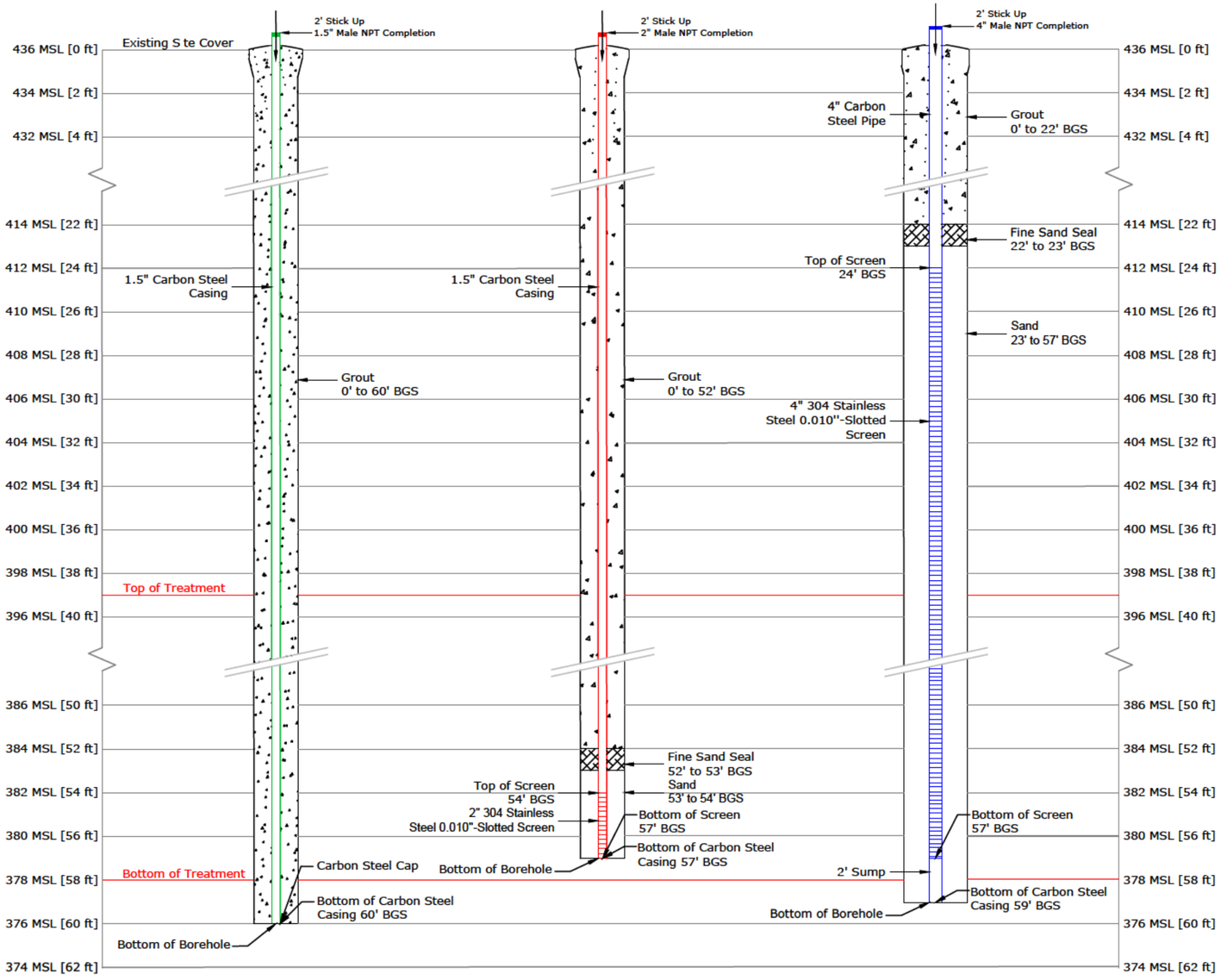

GENERAL NOTES:

1. MATERIAL TYPES
   - A. GROUT
     - HIGH TEMPERATURE PORTLAND TYPE 1 OR EQUIVALENT (NO BENTONITE)
   - B. SAND
     - FINE SAND SEAL: 40/60 SILICA SAND
     - STEAM INJECTION/EXTRACTION WELLS: 20/40 SILICA SAND
2. STEAM INJECTION WELLS
   - A. MINIMUM 4" DIAMETER BOREHOLE
   - B. 2" SCHEDULE 40 CARBON STEEL CASING
   - C. NOMINAL 2" DIAMETER WIRE-WRAPPED 304 STAINLESS STEEL 0.010"-SLOTTED SCREEN
3. TEMPERATURE WELLS
   - A. MINIMUM 4" DIAMETER BOREHOLE
   - B. 1.5" SCHEDULE 40 CARBON STEEL CASING
   - C. THREADS CAN BE NPT OR FLUSH JOINT
   - D. STICKUP MUST BE MALE NPT
   - E. ALL JOINTS TO BE TIGHTENED WITH PIPE WRENCH USING PIPE THREAD COMPOUND AND PTFE TAPE
4. MULTIPHASE EXTRACTION WELLS
   - A. MINIMUM 8" DIAMETER BOREHOLE
   - B. 4" SCHEDULE 40 CASING
   - C. NOMINAL 4" DIAMETER WIRE-WRAPPED 304 STAINLESS STEEL 0.010''-SLOTTED SCREEN
   - D. FITTINGS BETWEEN PIPE SECTIONS ARE 4 THREAD PER INCH (TPI) FLUSH THREADED UNLESS SPECIFIED OTHERWISE (IE M NPT OR PLUG)
   - E. 4" NPT FEMALE X WELD PLATE ENDS

McMillan-McGee Corp.
Electromagnetic Systems and Services
For the Energy and Environmental Industries
4895 - 35B Street SE
Calgary, AB T2B 3M9 Canada
www.mcmillan-mcgee.com
Ph: 403.569.5100, Fx: 403.272.7201

LPE

DATE

REV.	DATE (YR/MM/DD)	DESCRIPTION	DRAWN BY	ORG/ ENGR	Aprovad Dist
C1	2022/01/07	100% DESIGN	JS	CC	CC
B2	2021/09/28	90% DESIGN	JS	CC	CC
B1	2021/08/27	60% DESIGN	JS	CC	CC
A1	2021/08/20	NOT FOR CONSTRUCTION	CC	CC	--

APEGA PERMIT NUMBER: P09178

SCALE: NOT TO SCALE

TITLE: **Well Completion Drawing**

CLIENT: **AECOM**

PROJECT: **Roxana Public Works Yard**
Roxana, Illinois

SHEET: **WCD-01**

AREA B

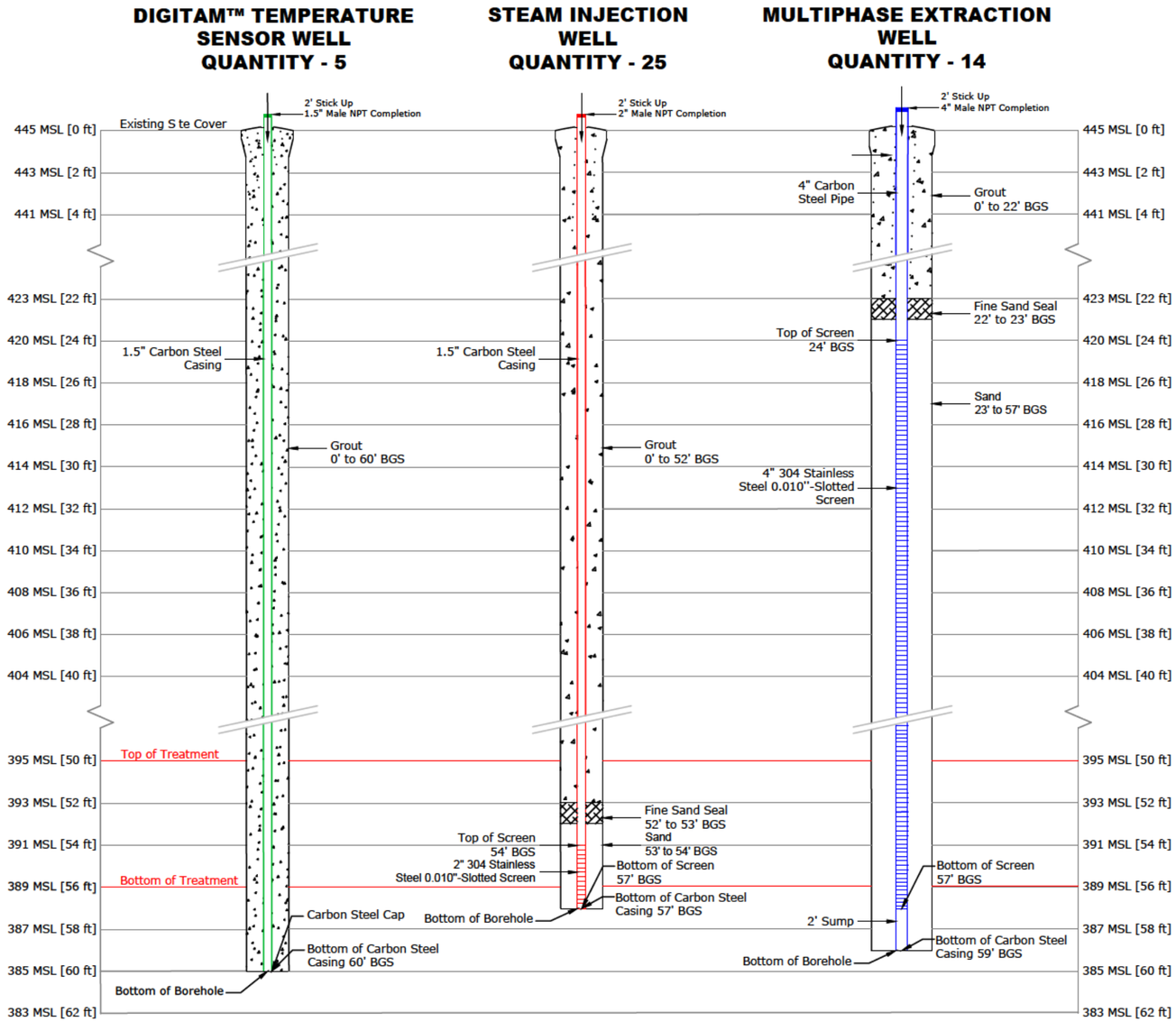

GENERAL NOTES:

1. MATERIAL TYPES
   - A. GROUT
     - HIGH TEMPERATURE PORTLAND TYPE 1 OR EQUIVALENT (NO BENTONITE)
   - B. SAND
     - FINE SAND SEAL: 40/60 SILICA SAND
     - STEAM INJECTION/EXTRACTION WELLS: 20/40 SILICA SAND
2. STEAM INJECTION WELLS
   - A. MINIMUM 4" DIAMETER BOREHOLE
   - B. 2" SCHEDULE 40 CARBON STEEL CASING
   - C. NOMINAL 2" DIAMETER WIRE-WRAPPED 304 STAINLESS STEEL 0.010"-SLOTTED SCREEN
3. TEMPERATURE WELLS
   - A. MINIMUM 4" DIAMETER BOREHOLE
   - B. 1.5" SCHEDULE 40 CARBON STEEL CASING
   - C. THREADS CAN BE NPT OR FLUSH JOINT
   - D. STICKUP MUST BE MALE NPT
   - E. ALL JOINTS TO BE TIGHTENED WITH PIPE WRENCH USING PIPE THREAD COMPOUND AND PTFE TAPE
4. MULTIPHASE EXTRACTION WELLS
   - A. MINIMUM 8" DIAMETER BOREHOLE
   - B. 4" SCHEDULE 40 CASING
   - C. NOMINAL 4" DIAMETER WIRE-WRAPPED 304 STAINLESS STEEL 0.010''-SLOTTED SCREEN
   - D. FITTINGS BETWEEN PIPE SECTIONS ARE 4 THREAD PER INCH (TPI) FLUSH THREADED UNLESS SPECIFIED OTHERWISE (IE M NPT OR PLUG)
   - E. 4" NPT FEMALE X WELD PLATE ENDS

McMillan-McGee Corp.
Electromagnetic Systems and Services For the Energy and Environmental Industries
4895 - 35B Street SE
Calgary, AB T2B 3M9 Canada
www.mcmillan-mcgee.com
Ph: 403.569.5100, Fx: 403.272.7201

REV.	DATE (YR/MM/DD)	DESCRIPTION	DRAWN BY	ORG/ ENGR	Aprovac Dist
C1	2022/01/07	100% DESIGN	JS	CC	CC
B3	2021/12/02	FINALIZE TREATMENT AREA B	JS	CC	CC
B2	2021/09/28	90% DESIGN	JS	CC	CC
B1	2021/08/27	60% DESIGN	JS	CC	CC
A1	2014/06/13	NOT FOR CONSTRUCTION	CC	CC	–

LPE
DATE
APEGA PERMIT NUMBER: P09178
SCALE: NOT TO SCALE

TITLE: **Well Completion Drawing**
CLIENT: **AECOM**
PROJECT: **Roxana Public Works Yard, Roxana, Illinois**
SHEET: **WCD-02**

ANGLED
STEAM INJECTION WELL
QUANTITY - 12

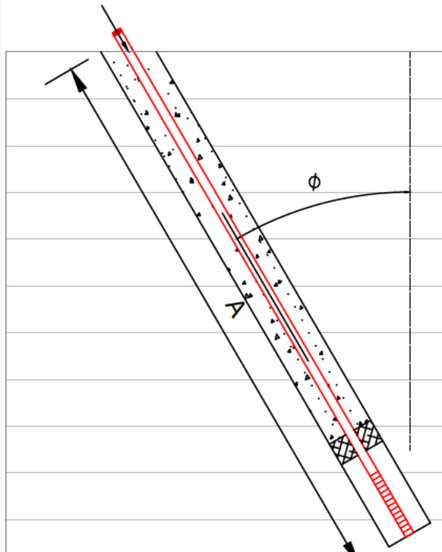

ANGLED DIGITAM™
TEMPERATURE SENSOR
WELL
QUANTITY - 2

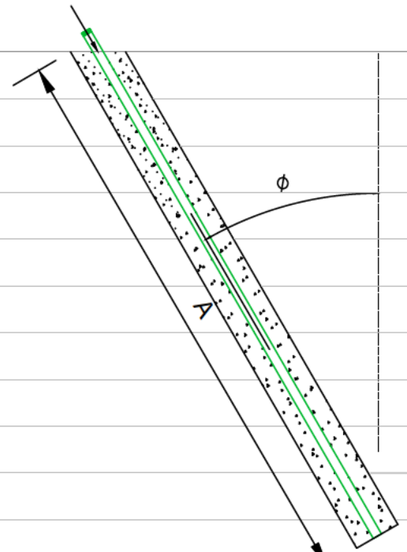

ANGLED MULTIPHASE
EXTRACTION WELL
QUANTITY - 6

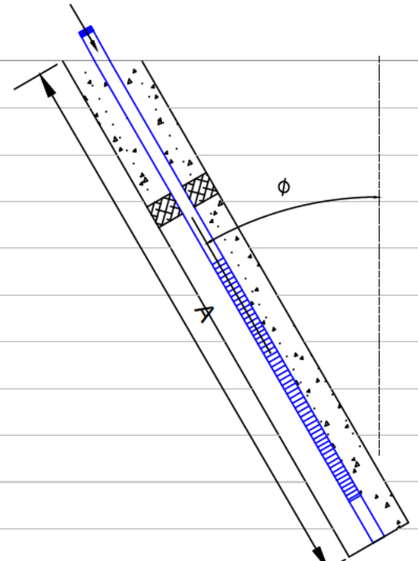

GENERAL NOTES:

1. MATERIAL TYPES
   - A. GROUT
     - HIGH TEMPERATURE PORTLAND TYPE 1 OR EQUIVALENT (NO BENTONITE)
   - B. SAND
     - FINE SAND SEAL: 40/60 SILICA SAND
     - STEAM INJECTION/EXTRACTION WELLS: 20/40 SILICA SAND
2. STEAM INJECTION WELLS
   - A. MINIMUM 4" DIAMETER BOREHOLE
   - B. 2" SCHEDULE 40 CARBON STEEL CASING
   - C. NOMINAL 2" DIAMETER WIRE-WRAPPED 304 STAINLESS STEEL 0.010"-SLOTTED SCREEN
3. TEMPERATURE WELLS
   - A. MINIMUM 4" DIAMETER BOREHOLE
   - B. 1.5" SCHEDULE 40 CARBON STEEL CASING
   - C. THREADS CAN BE NPT OR FLUSH JOINT
   - D. STICKUP MUST BE MALE NPT
   - E. ALL JOINTS TO BE TIGHTENED WITH PIPE WRENCH USING PIPE THREAD COMPOUND AND PTFE TAPE
4. MULTIPHASE EXTRACTION WELLS
   - A. MINIMUM 8" DIAMETER BOREHOLE
   - B. 4" SCHEDULE 40 CASING
   - C. NOMINAL 4" DIAMETER WIRE-WRAPPED 304 STAINLESS STEEL 0.010''-SLOTTED SCREEN
   - D. FITTINGS BETWEEN PIPE SECTIONS ARE 4 THREAD PER INCH (TPI) FLUSH THREADED UNLESS SPECIFIED OTHERWISE (IE M NPT OR PLUG)
   - E. 4" NPT FEMALE X WELD PLATE ENDS

ANGLED WELL DETAILS

Well	ø	A	Well	ø	A	Well	ø	A
SI-AH5	18.83	60.22	SI-BE4	7.10	57.44	X-BD1	17.63	61.90
SI-AH7	15.73	59.21	SI-BF4	7.86	57.54	X-BE1	17.63	61.90
SI-AG6	12.56	58.39	SI-BG4	8.67	57.66	X-BF1	17.63	61.90
SI-AG5	13.30	58.57	SI-BH4	9.43	57.78	X-BG1	17.63	61.90
SI-BB4	4.70	57.19	SI-BI4	11.31	58.13	T-AG6	14.93	62.10
SI-BC4	5.50	57.26	X-AG7	12.15	60.35	T-BF2	13.01	61.58
SI-BD4	6.29	57.35	X-BC1	17.63	61.90			

McMillan-McGee Corp.
Electromagnetic Systems and Services
For the Energy and Environmental Industries
4895 - 35B Street SE
Calgary, AB T2B 3M9 Canada
www.mcmillan-mcgee.com
Ph: 403.569.5100, Fx: 403.272.7201

LPE

DATE

REV.	DATE (YR/MM/DD)	DESCRIPTION	DRAWN BY	ORG/ ENGR	Approved Dist
C1	2022/01/07	100% DESIGN	JS	CC	CC
B4	2021/12/02	FINALIZE TREATMENT AREA B	JS	CC	CC
B3	2021/10/26	UPDATE T-AG6 AND T-BF2	JS	CC	CC
B2	2021/09/28	90% DESIGN	JS	CC	CC
B1	2021/08/20	60% DESIGN	JS	CC	CC

APEGA PERMIT NUMBER: P09178
SCALE: NOT TO SCALE

TITLE: **Well Completion Drawing**

CLIENT: **AECOM**

PROJECT: **Roxana Public Works Yard**
Roxana, Illinois

SHEET: **WCD-03**

MULTIPHASE EXTRACTION WELL WITH DOWNHOLE PUMP

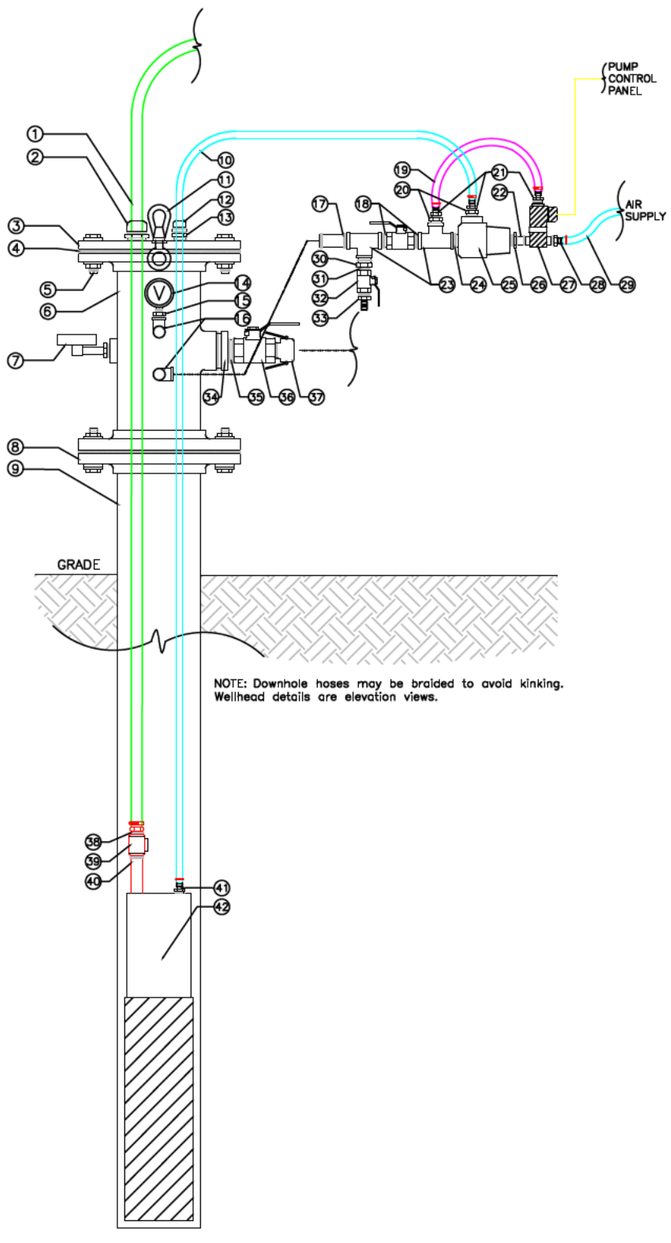

NOTE: Downhole hoses may be braided to avoid kinking. Wellhead details are elevation views.

WELLHEAD COMPONENTS

1. 1/2" ID PTFE GROUNDWATER EXTRACTION LINE
2. 1/2" X 3/4" M NPT CORD GRIP, PVDF
3. 4" ø 150# WELL COVER PLATE, STEEL
4. 4" ø 150# X 1/8" GASKET, VITON (TYP.)
5. 5/8" BOLT, LOCK WASHER & HEX NUT, ZINC (TYP.)
6. 4" ø Mc² WELLHEAD X 150# FLANGE ENDS, STEEL
7. TEMPERATURE GAUGE 0–250°F X 1/2" M NPT
8. 4" ø 150# FLANGE X 4" F NPT, STEEL
9. 4" ø M NPT RISER STICKUP, CARBON STEEL
10. 1/4" ID PTFE COMPRESSED AIR HOSE
11. 1/2" LIFTING EYE ASSEMBLY, WITH GASKET
12. 3/8" X 1/2" M NPT CORD GRIP, PVDF
13. 3/4" M NPT X 1/2" F NPT BUSHING, GALV.
14. VACUUM GAUGE, 0–30" HG X 1/4" M NPT
15. 1/2" M NPT X 1/4" F NPT BUSHING, BRASS
16. 1/2" NPT STREET ELBOW, BRASS
17. 1/2" X 3" NIPPLE, GALV.
18. 1/2" NPT CLOSE NIPPLE, GALV.
19. 1/4" ID ORTAC VENT HOSE
20. 1/2" M NPT X 1/4" F NPT BUSHING, BRASS
21. 1/4" M NPT X 1/4" HOSE BARB, BRASS
22. 1/4" X 3" NIPPLE, GALV.
23. 1/2" NPT PIPE TEE, GALV.
24. 1/2" NPT CLOSE NIPPLE, GALV.
25. 1/2" SUPER QUICK EXHAUST VALVE
26. 1/2" M NPT X 1/4" F NPT BUSHING, BRASS
27. 1/4" 3–WAY SOLENOID VALVE
28. 1/4" M NPT X 1/4" HOSE BARB, BRASS
29. 1/4" ID ORTAC COMPRESSED AIR HOSE
30. 1/2" M NPT X 3/8" F NPT BUSHING, GALV.
31. 3/8" NPT CLOSE NIPPLE, BRASS
32. 3/8" NPT BALL VALVE, BRASS
33. 3/8" M NPT X 1/4" HOSE BARB, BRASS
34. 2" M NPT X 1–1/2" F NPT REDUCER BUSHING, GALV.
35. 1–1/2" NPT CLOSE NIPPLE, GALV.
36. 1–1/2" NPT BALL VALVE, BRASS
37. 1–1/2" M NPT X 1–1/2" FEMALE CAMLOCK (PART B), ALUM. ALLOY
38. 1/2" M NPT X 3/4" HOSE BARB, BRASS
39. 3/4" SWING CHECK VALVE, BRASS
40. 3/4" X 6" NIPPLE, GALV.
41. 1/4" M NPT X 1/4" HOSE BARB, BRASS
42. PNEUMATIC PUMP WITH TOP–LOADING CUP ADAPTER

MULTIPHASE EXTRACTION WELL CONNECTION TO CONVEYANCE PIPING NETWORK

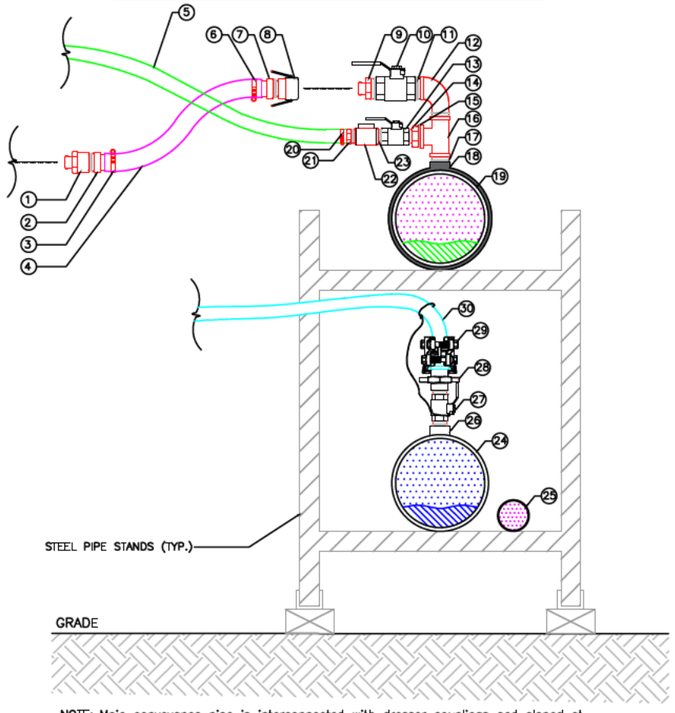

NOTE: Main conveyance pipe is interconnected with dresser couplings and sloped at approximately 1 degree from horizontal towards the inlet of the treatment system. Multiphase flow regime may not be as illustrated. Details are elevation views.

PIPING CONNECTION COMPONENTS

1. 1–1/2" M CAMLOCK TO 1–1/2" F NPT (PART A), ALUM. ALLOY
2. 1–1/2" M NPT TO X 1–1/2" HOSE BARB
3. 1–1/2" HOSE CLAMP
4. 1–1/2" ID PARKER SERIES 7373T BLUE THUNDER CORRUGATED CHEMICAL SUCTION VAPOR EXTRACTION HOSE
5. 1/2 " ID PTFE GROUNDWATER EXTRACTION HOSE
6. 1–1/2" HOSE CLAMP
7. 1–1/2" HOSE BARB X 1–1/2" M NPT
8. 1–1/2" F NPT X 1–1/2" F CAMLOCK (PART D), ALUM. ALLOY
9. 1–1/2" M CAMLOCK X 1–1/2" M NPT (PART F), ALUM. ALLOY
10. 1–1/2" NPT BALL VALVE, BRASS
11. 1–1/2" NPT CLOSE NIPPLE, GALV.
12. 1–1/2" NPT STREET ELBOW, GALV.
13. 1/2" NPT BALL VALVE, BRASS
14. 1/2" NPT CLOSE NIPPLE, GALV.
15. 1–1/2" M NPT X 1/2" F NPT REDUCER BUSHING, GALV.
16. 1–1/2" F NPT X 1–1/2" F NPT X 1–1/2" F NPT TEE, GALV.
17. 1–1/2" NPT CLOSE NIPPLE, GALV.
18. 1–1/2" F NPT PIPE SADDLE, CARBON STEEL
19. 2" TO 12" ø PIPE HEADER, CARBON STEEL
20. 1/2" HOSE CLAMP
21. 1/2" M NPT TO X 1/2" HOSE BARB
22. 1/2" SWING CHECK VALVE, BRASS
23. 1/2" NPT CLOSE NIPPLE, GALV.
24. 2" to 6" ø STEAM HEADER, CARBON STEEL
25. 1" ø AIR SUPPLY LINE, CARBON STEEL
26. 1" F NPT WELDOLET, CARBON STEEL
27. 1" NPT BALL VALVE, SS
28. 1" HAMMER LOCK ASSEMBLY, ZINC PLATED DUCTILE IRON
29. 1" COLLAR LOCK BOLT CLAMP, PLATED DUCTILE IRON
30. 1" STEAM HOSE

TEMPERATURE MONITORING POINT

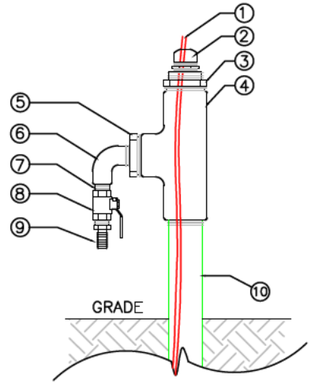

TEMPERATURE COMPONENTS

1. TEMPERATURE SENSOR STRING, 3/8" STRING DIA.
2. 3/8" X 3/4" M NPT CORD GRIP, NYLON
3. 1–1/2" M NPT X 3/4" F NPT BUSHING, GALV.
4. 1–1/2" NPT PIPE TEE, GALV.
5. 1–1/2" M NPT X 3/8" F NPT BUSHING, GALV.
6. 3/8" NPT STREET ELBOW, GALV.
7. 3/8" NPT CLOSE NIPPLE, GALV.
8. 3/8" NPT BALL VALVE, BRASS
9. 3/8" M NPT X 1/4" HOSE BARB, BRASS
10. 1–1/2" M NPT CARBON STEEL RISER STICKUP

NOTE: Wellhead details are elevation views.

McMillan-McGee Corp.
Electromagnetic Systems and Services For the Energy and Environmental Industries
4895 - 35B Street SE
Calgary, AB T2B 3M9 Canada
www.mcmillan-mcgee.com
Ph: 403.569.5100, Fx: 403.272.7201

REV.	DATE (D/M/Y)	DESCRIPTION	DRAWN BY	ORIG/ ENGR	Approved Dist
C1	2022/01/07	100% DESIGN	JS	CC	CC
B3	2021/10/26	UPDATE VAPOR EXTRACTION HOSE	JS	CC	CC
B2	2021/09/28	90% DESIGN	JS	CC	CC
B1	2021/08/27	60% DESIGN	JS	CC	CC
A3	2021/08/27	UPDATE PEX LINE	JS	CC	CC
A2	2021/08/24	UPDATE NUMBERING	JS	CC	CC

LPE | DATE | APEGA PERMIT NUMBER: P09178 | SCALE: NOT TO SCALE

TITLE: **Well Head Details**

CLIENT: **AECOM**

PROJECT: **Roxana Public Works Yard**
Roxana, Illinois

SHEET: **WHD-01**

STEAM INJECTION WELL METERING STATION

1. 2" STEAM PIPE, CARBON STEEL COMPLETE WITH M NPT THREADING
2. U–CLAMP COMPATIBLE WITH 2" ø PIPE
3. 2"F NPT GATE VALVE, BRASS
4. 2"F x 2"F x 2"F TEE, BLACK STEEL (TYP.)
5. 2"M x 1/4"F REDUCER BUSHING, BLACK STEEL (TYP.)
6. 1/4"M x 1/4"M PIGTAIL SYPHON, CARBON STEEL
   - 500 PSI PRESSURE RATING
   - 400°F TEMPERATURE RATING
7. 1/4" FULL PORT BALL VALVE, BRASS
8. 0–30 PSI DRY BOTTOM MOUNT PRESSURE GAUGE
9. 2"M x 1"F REDUCER BUSHING, BLACK STEEL (TYP.)
10. 1" STEAM PIPE, CARBON STEEL COMPLETE WITH M NPT THREADING
11. 1" PRESSURE REGULATOR, 10–30 PSI OUTLET PRESSURE, CAST IRON
12. 1" HIGH PRESSURE STEAM PIPE, CARBON STEEL COMPLETE WITH M NPT THREADING
13. ORIFICE PLATE METERING ASSEMBLY:
    - #150 FF THREADED A105 CORNER TAP FLANGE (1/8" TAP), CS
    - DIFF. PRESSURE GAUGE, 0–5 PSI DP
    - ECCENTRIC ORIFICE PLACE COMPLETE WITH WEEP HOLE (SIZED FOR 150 PSI SYSTEM)
14. U–CLAMP COMPATIBLE WITH 1" ø PIPE
15. 0–200 PSI DRY BOTTOM MOUNT PRESSURE GAUGE
16. 1/4" FULL PORT BALL VALVE, STAINLESS STEEL
17. 1"M x 1/4"F REDUCER BUSHING, BLACK STEEL (TYP.)
18. 50–500°F TEMPERATURE GAUGE
19. 1/2"F x 3/4"M THERMOWELL, STAINLESS STEEL
20. 1"M x 3/4"F REDUCER BUSHING, BLACK STEEL (TYP.)
21. 1"F x 1"F x 1"F TEE, BLACK STEEL (TYP.)
22. 1" FULL PORT BALL VALVE, STAINLESS STEEL
23. 1" HAMMER LOCK ASSEMBLY, ZINC PLATED DUCTILE IRON
24. 1" COLLAR LOCK BOLT CLAMP, PLATED DUCTILE IRON
25. SAFETY LANYARD
26. 1" GREENLINE G572–100 EPDM STEAM HOSE
27. UNISTRUT BRACE

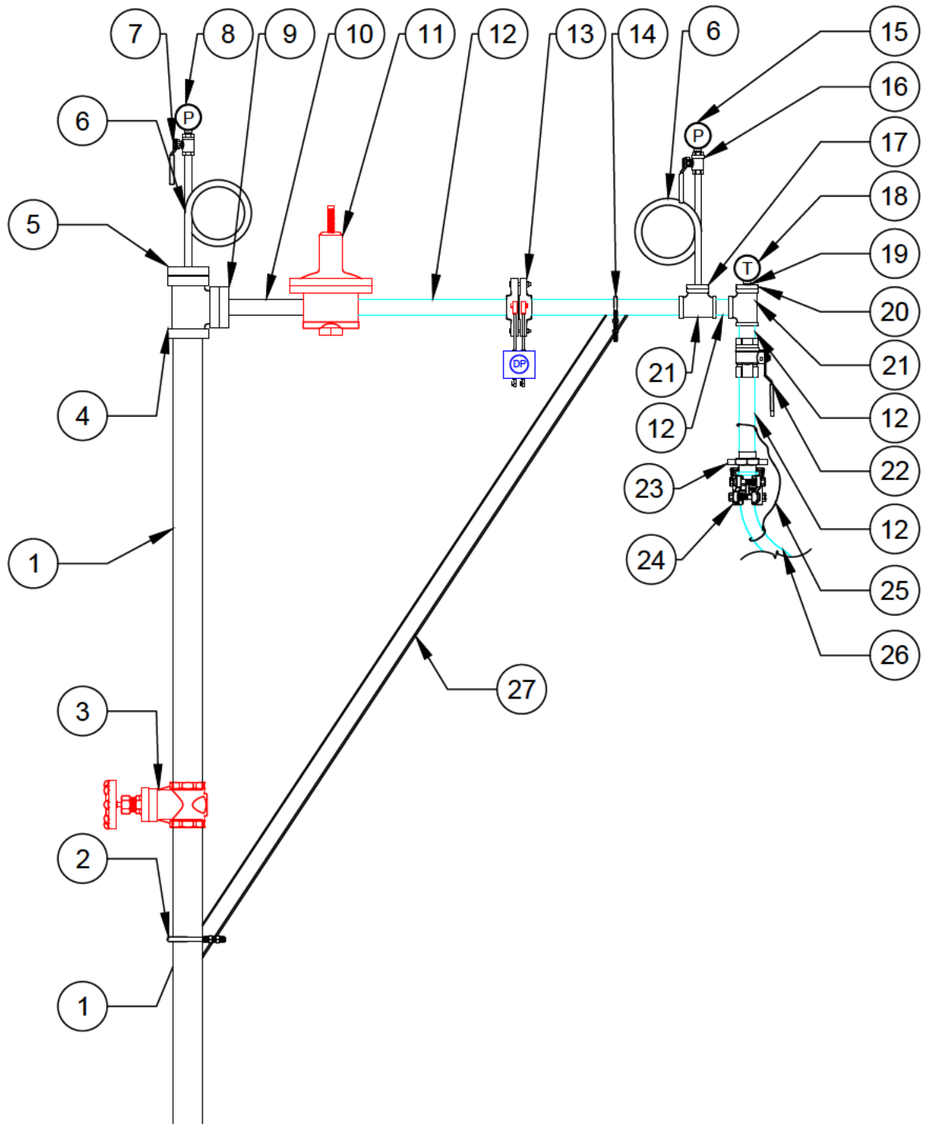

McMILLAN-McGEE CORP.
ELECTROMAGNETIC SYSTEMS AND SERVICES FOR THE ENERGY AND ENVIRONMENTAL INDUSTRIES
4895 - 35B STREET SE
CALGARY, AB T2B 3M9 CANADA
WWW.MCMILLAN-MCGEE.COM
PH: 403.569.5100, FX: 403.272.7201

REV.	DATE (D/M/Y)	DESCRIPTION	DRAWN BY	ORG/ ENGR	Aproved Dist
C1	2022/01/07	100% DESIGN	JS	CC	CC
B3	2021/10/26	UPDATE STEAM HOSE SPECS.	JS	CC	CC
B2	2021/09/28	90% DESIGN	JS	CC	CC
B1	2021/08/27	60% DESIGN	JS	CC	CC
A3	2021/08/24	UPDATE EQUIPMENT SPECS	JS	CC	CC
A2	2021/08/21	UPDATE DESIGN	JS	CC	CC

LPE

DATE

APEGA PERMIT NUMBER: P09178

SCALE: NOT TO SCALE

TITLE: **Well Head Details**

CLIENT: **AECOM**

PROJECT: **Roxana Public Works Yard**
Roxana, Illinois

SHEET: **WHD-02**

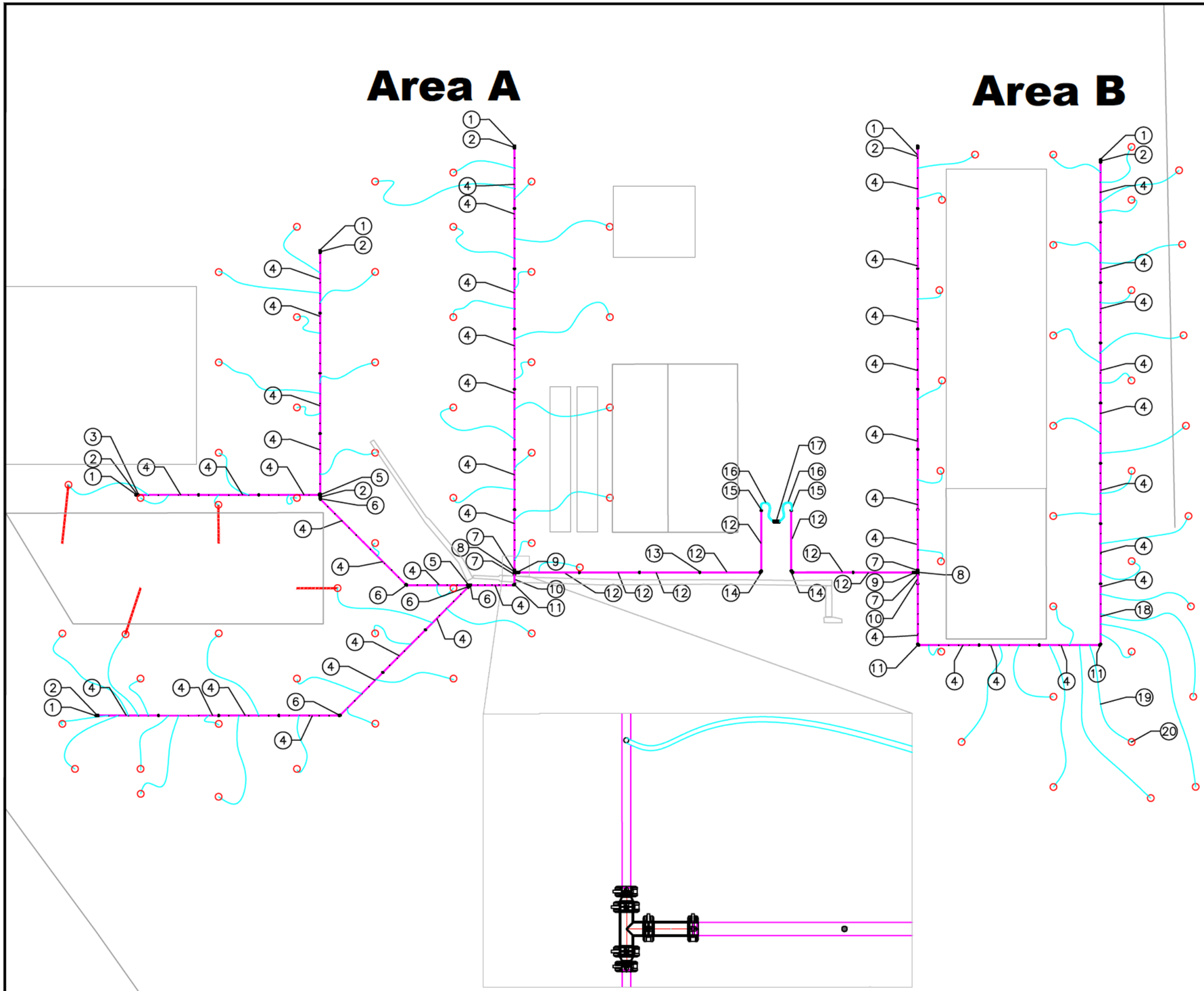

STEAM PIPING COMPONENTS

1. 2" VICTAULIC CAPS, PART No. 860C
2. 2" VICTAULIC DRIP LEG, PART No. 892C, SEE SPD-02
3. 2" VICTAULIC COUPLING, USED AT EVERY 2" TO 2" CONNECTION POINT, PART No. 870
4. 2" CARBON STEEL PIPE, 20' SEGMENT COMPLETE WITH:
   A. GROOVES COMPATIBLE WITH 2" VICTAULIC FITTINGS; AND
   B. 5 EVENLY-SPACED 1" NPT THREADED WELDOLET CONNECTIONS
5. 2" VICTAULIC TEE, PART No. 820C
6. 2" VICTAULIC 45 DEGREE ELBOW, PART No. 811C
7. 2" x 3" VICTAULIC CONCENTRIC REDUCER, PART No. 850C
8. 3" VICTAULIC TEE, PART No. 820C
9. 3" VICTAULIC DRIP LEG, PART No. 892C SEE SPD-02
10. 2" CARBON STEEL PIPE, 3' SEGMENT COMPLETE WITH:
    A. GROOVES COMPATIBLE WITH 2" VICTAULIC FITTINGS
11. 2" VICTAULIC 90 DEGREE ELBOW, PART No. 890C
12. 3" CARBON STEEL PIPE, 20' SEGMENT COMPLETE WITH:
    A. GROOVES COMPATIBLE WITH 3" VICTAULIC FITTINGS; AND
    B. 5 EVENLY-SPACED 1" NPT THREADED WELDOLET CONNECTIONS
13. 3" VICTAULIC COUPLING, USED AT EVERY 3" TO 3" CONNECTION POINT, PART No. 870
14. 3" VICTAULIC 90 DEGREE ELBOW, PART No. 890C
15. 3" VICTAULIC 150# FLANGE ADAPTER NIPPLE, PART No. 845FC
16. 3" STEAM HOSE COMPLETE WITH 150# FLANGE ON BOTH ENDS
17. 3" TEE, FLANGED, DETAILS AND CONNECTION TO BOILER TBD
18. 1" THICK OWENS CORNING INSULATION, 3' LENGTH, TO COVER ALL 2" AND 3" PIPING
19. 1" GREENLINE G572-100 EPDM STEAM HOSE, VARIBALE LENGTHS
20. STEAM INJECTION WELLHEAD CONNECTION, SEE WHD-02

McMillan-McGee Corp.
Electromagnetic Systems and Services
For the Energy and Environmental Industries
4895 - 35B Street SE
Calgary, AB T2B 3M9 Canada
www.mcmillan-mcgee.com
Ph: 403.569.5100, Fx: 403.272.7201

REV.	DATE (D/M/Y)	DESCRIPTION	DRAWN BY	ORG/ ENGR	Approved Dist
C2	2022/10/12	100% RDR ADDENDUM	JS	JS	CC
C1	2022/01/07	100% DESIGN	JS	CC	CC
B3	2021/12/02	FINALIZE TREATMENT AREA B	JS	CC	CC
B2	2021/10/26	ADD STEAM HOSE SPECS	JS	CC	CC
B1	2021/09/28	90% DESIGN	JS	CC	CC
A2	2021/09/27	ADD PIPE INSULATION	JS	CC	–

LPE

DATE

APEGA PERMIT NUMBER: P09178

SCALE: NOT TO SCALE

TITLE: **Steam Piping Details**

CLIENT: **AECOM**

PROJECT: **Roxana Public Works Yard**
Roxana, Illinois

SHEET: **SPD-01**

2" DRIP LEG AND STEAM TRAP COMPONENTS

1. 2" VICTAULIC No. 892C SCHEDULE 40 AUTOMATIC WARM UP IN-LINE DRIP LEG ASSEMBLY
   - A. DRIP LEG
   - B. MUG TRAP
2. 3/4"M NPT CARBON STEEL NIPPLE
3. 3/4"F NPT CARBON STEEL Y-STRAINER
4. SPIRAX-SARCO H34/7 3/4" INVERTED BUCKET STEAM TRAP
   - PRESSURE RATED TO 175 PSI AT 165 LBS/H OF CONDENSATE
5. 3/4" NPT BALL VALVE, BRASS

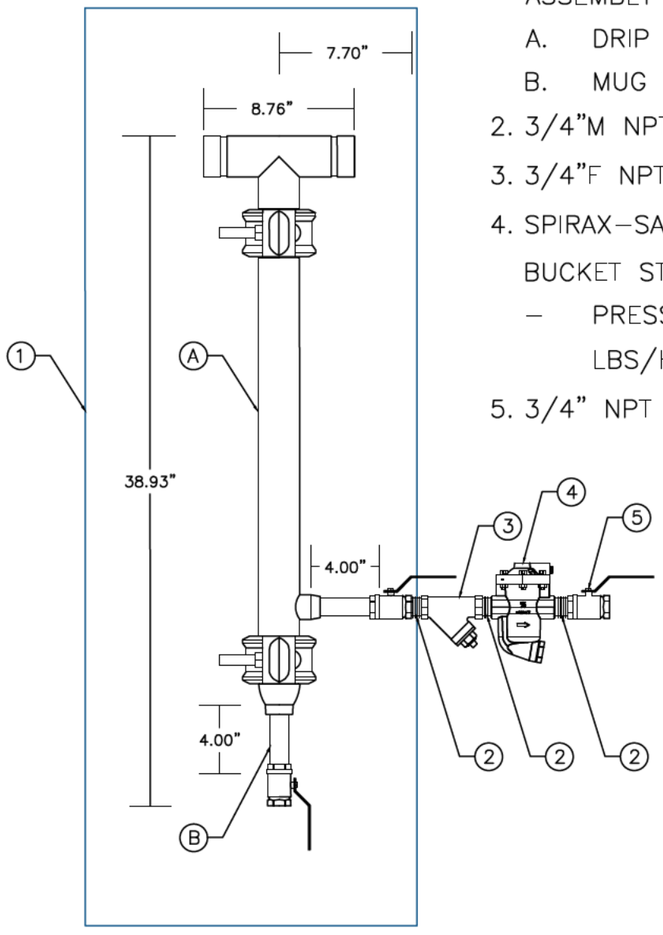

2" VICTAULIC DRIP LEG ASSEMBLY

3" DRIP LEG AND STEAM TRAP COMPONENTS

1. 3" VICTAULIC No. 892C SCHEDULE 40 AUTOMATIC WARM UP IN-LINE DRIP LEG ASSEMBLY
   - A. DRIP LEG
   - B. MUD TRAP
2. 3/4"M NPT CARBON STEEL NIPPLE
3. 3/4"F NPT CARBON STEEL Y-STRAINER
4. SPIRAX-SARCO H34/7 3/4" INVERTED BUCKET STEAM TRAP
   - PRESSURE RATED TO 175 PSI AT 165 LBS/H OF CONDENSATE
5. 3/4" NPT BALL VALVE, BRASS

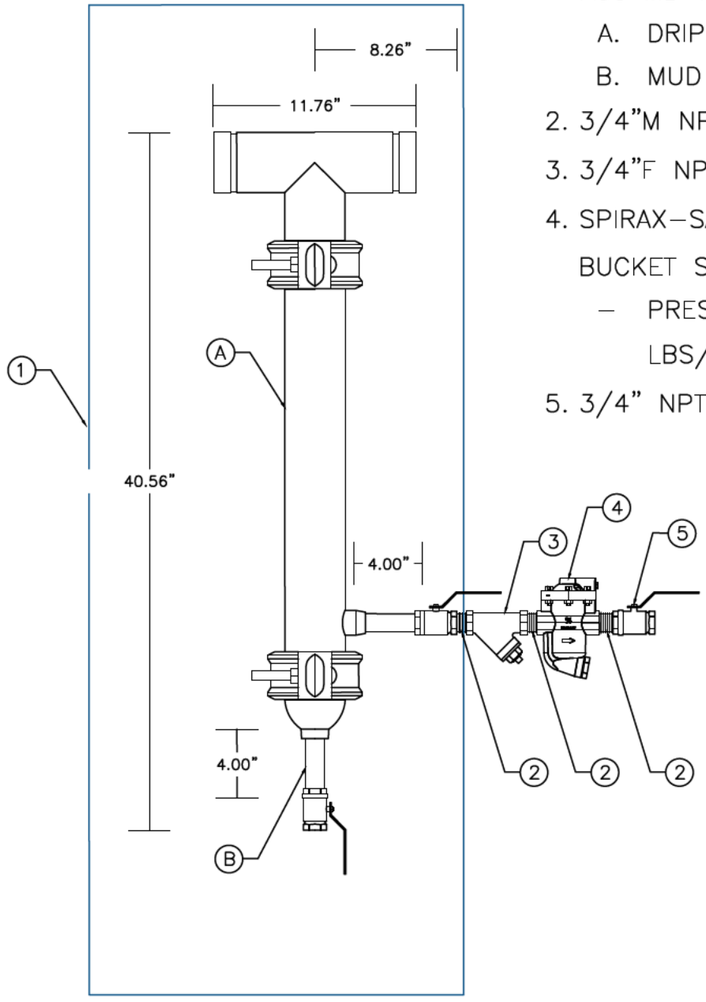

3" VICTAULIC DRIP LEG ASSEMBLY

McMILLAN-McGEE CORP.
ELECTROMAGNETIC SYSTEMS AND SERVICES FOR THE ENERGY AND ENVIRONMENTAL INDUSTRIES
4895 - 35B STREET SE
CALGARY, AB T2B 3M9 CANADA
WWW.MCMILLAN-MCGEE.COM
PH: 403.569.5100, FX: 403.272.7201

LPE

DATE

REV.	DATE (D/M/Y)	DESCRIPTION	DRAWN BY	ORG/ ENGR	Aproved Dist
C1	2022/01/07	100% DESIGN	JS	CC	CC
B1	2021/09/28	90% DESIGN	JS	CC	CC
A1	2021/09/20	DRAFT FOR REVIEW	JS	CC	–

APEGA PERMIT NUMBER: P09178 | SCALE: NOT TO SCALE

TITLE: **Steam Piping Details**

CLIENT: **AECOM**

PROJECT: **Roxana Public Works Yard, Roxana, Illinois**

SHEET: **SPD-02**

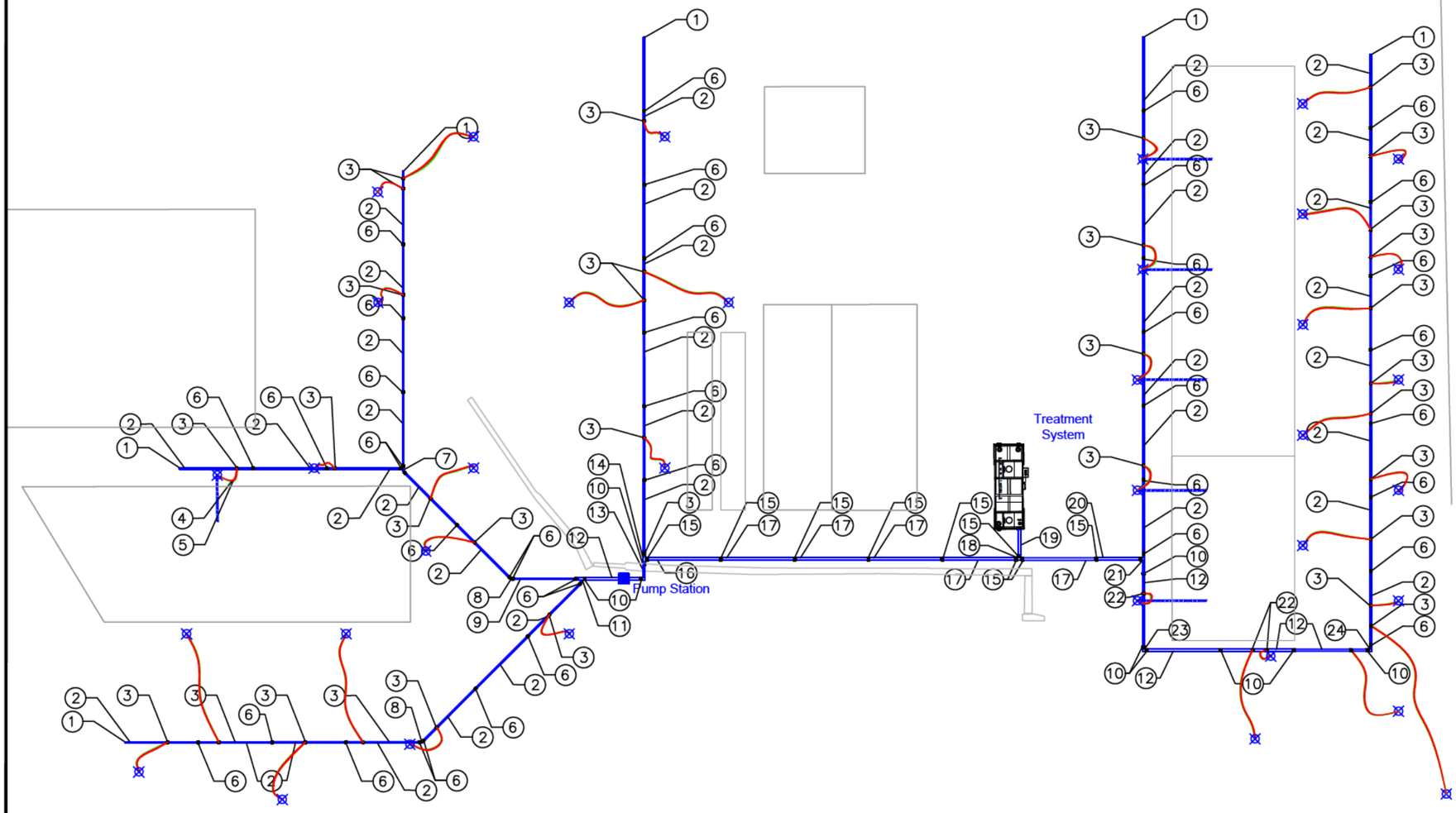

EXTRACTION PIPING COMPONENTS

1. 4" CARBON STEEL PIPE CAP
2. 4" CARBON STEEL PIPE, 20' LENGTH
3. 4" PIPE SADDLE WITH 1/2" CONNECTION POINT
4. 1/2" PTFE GROUNDWATER EXTRACTION LINE TO EXTRACTION WELLHEAD, VARIABLE LENGTH
5. 1-1/2" PARKER SERIES 7373T BLUE THUNDER CORRUGATED CHEMICAL SUCTION HOSE VAPOR EXTRACTION LINE TO EXTRACTION WELLHEAD, VARIABLE LENGTH
6. 4" DRESSER COUPLING WITH VITON GASKETS
7. CUSTOM WELDED 4" TEE COMPLETE WITH 45 DEGREE ELBOW
8. CUSTOM WELDED 4" 45 DEGREE ELBOW
9. 4" CARBON STEEL PIPE, 17' LENGTH
10. 6" DRESSER COUPLING WITH VITON GASKETS
11. CUSTOM WELDED TEE COMPLETE WITH 45 DEGREE ELBOW
12. 6" CARBON STEEL PIPE, 20' LENGTH
13. CUSTOM WELDED 6" ELBOW
14. CUSTOM WELDED TEE
15. 8" DRESSER COUPLING WITH VITON GASKETS
16. 8" CARBON STEEL PIPE, 15' LENGTH
17. 8" CARBON STEEL PIPE, 20' LENGTH
18. CUSTOM WELDED TEE
19. 8" CARBON STEEL PIPE, 7' LENGTH
20. 8" CARBON STEEL PIPE, 12' LENGTH
21. CUSTOM WELDED TEE
22. 6" PIPE SADDLE
23. CUSTOM WELDED 6" ELBOW
24. CUSTOM WELDED ELBOW

McMillan-McGee Corp.
Electromagnetic Systems and Services
For the Energy and Environmental Industries
4895 - 35B Street SE
Calgary, AB T2B 3M9 Canada
www.mcmillan-mcgee.com
Ph: 403.569.5100, Fx: 403.272.7201

LPE

DATE

REV.	DATE (D/M/YY)	DESCRIPTION	DRAWN BY	ORG/ ENGR	Aproved Dist.
C2	2022/10/13	100% RDR ADDENDUM	JS	JS	CC
C1	2022/01/07	100% DESIGN	JS	CC	CC
B3	2021/12/02	FINALIZE TREATMENT AREA B	JS	CC	CC
B2	2021/10/26	UPDATE VAPOR EXTRACTION LINE	JS	CC	CC
B1	2021/09/28	90% DESIGN	JS	CC	CC
A1	2021/09/27	DRAFT FOR REVIEW	JS	CC	–

APEGA PERMIT NUMBER: P09178 — SCALE: NOT TO SCALE

TITLE: **Extraction Piping Details**

CLIENT: **AECOM**

PROJECT: **Roxana Public Works Yard**
Roxana, Illinois

SHEET: **EPD-01**

TOTAL ESTIMATED LOAD = 260kVA / 313A @ 480V

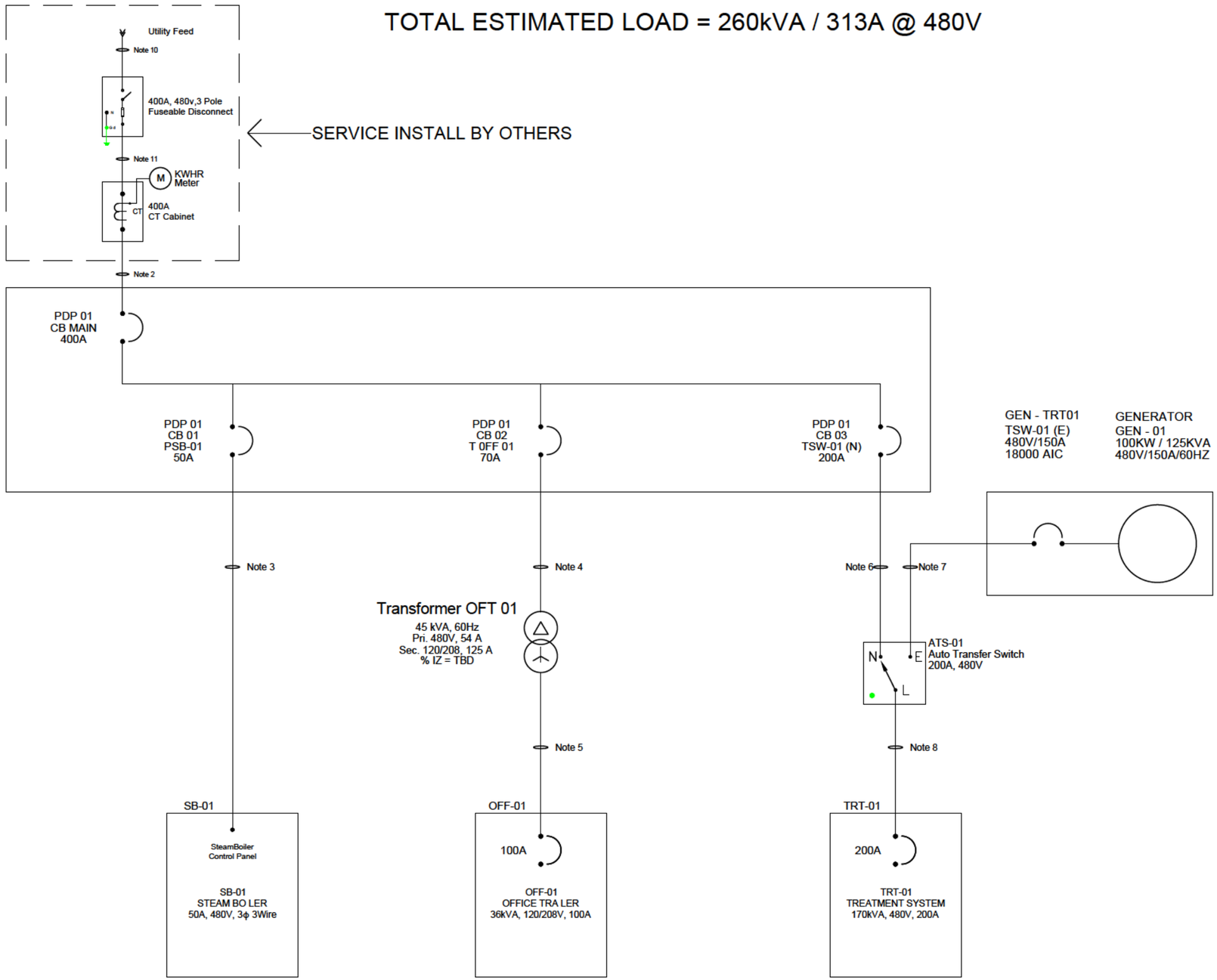

General Notes

1. Construction and material shall comply with applicable Federal, State, local building codes and the National Electrical Code (NEC).

2. Cable from Metering Cabinet to PDP 01 (CB Main): Two (2) 3C-250 kcmil c/w #2 AWG AL Ground *(STR AL NUAL Alcan Type ACWU90 XLPE INS AIA BLK PVC JKT 600V 90C HL CSA C22.2 NO.51, above ground rated).*

3. Cable from PDP 01 (CB 01) to SB-01 Control Panel: One (1) 3C-#4 AWG c/w #6 AWG AL Ground *(STR AL NUAL Alcan Type ACWU90 XLPE INS AIA BLK PVC JKT 600V 90C HL CSA C22.2 NO.51, above ground rated).*

4. Cable from PDP 01 (CB 02) to Transformer OFT 01: One (1) 3C-#4 AWG c/w #6 AWG AL Ground *(STR AL NUAL Alcan Type ACWU90 XLPE INS AIA BLK PVC JKT 600V 90C HL CSA C22.2 NO.51, above ground rated).*

5. Cable from Transformer OFT 01 to Office trailer OFF-01: One (1) 4C-#2/0 AWG c/w #4 AWG AL Ground *(STR AL NUAL Alcan Type ACWU90 XLPE INS AIA BLK PVC JKT 600V 90C HL CSA C22.2 NO.51, above ground rated)*

6. Cable from PDP 01 (CB 03) to Auto Transfer Switch ATS-01 (N) : One (1) 3C-250 kcmil c/w #2 AWG AL Ground *(STR AL NUAL Alcan Type ACWU90 XLPE INS AIA BLK PVC JKT 600V 90C HL CSA C22.2 NO.51, above ground rated).*

7. Cable from GEN-01 to Auto Transfer Switch ATS-01 (E): One (1) 3C-250 kcmil c/w #2 AWG Cu Ground *(STR AL NUAL Alcan Type ACWU90 XLPE INS AIA BLK PVC JKT 600V 90C HL CSA C22.2 NO.51, above ground rated).*

8. Cable from Auto Transfer Switch ATS-01 (L) to Treatment System TRT-01: One (1) 3C-250 kcmil c/w #2 AWG Cu Ground *(STR AL NUAL Alcan Type ACWU90 XLPE INS AIA BLK PVC JKT 600V 90C HL CSA C22.2 NO.51, above ground rated).*

9. All electrical equipment shall be grounded in accordance with NEC.

10. Service conductors from Utility feed connection to 400A fused weaterproof (NEMA 3R) disconnect: Two (2) parallel runs of the following; Four (4) 3/0 AWG Cu conductors in conduit. (MATERIAL AND INSTALLATION BY OTHERS).

11. Service conductors from 400A fused disconnect to Meter cabinet: Two (2) parallel runs of the following; Four (4) 3/0 AWG Cu conductors in conduit. (MATERIAL AND INSTALLATION BY OTHERS).

12. SERVICE EQUIPMENT (DISCONNECT, METERING CABINET, CABLE and CONDUITS) MATERIAL AND INSTALLATION BY OTHERS.

McMillan-McGee Corp.

Electromagnetic Systems and Services
For the Energy and Environmental Industries

4895 - 35B Street SE
Calgary, AB T2B 3M9 Canada

www.mcmillan-mcgee.com
Ph: 403.569.5100, Fx: 403.272.7201

LPE

DATE

REV.	DATE (D/M/Yr)	DESCRIPTION	DRAWN BY	ORG/ ENGR	Aproved Dist.
C1	2022/01/07	100% DESIGN	DP	CC	ER
B1	2021/09/28	90% DESIGN	DP	CC	CC
A1	2021/08/26	DRAFT FOR REVIEW	DP	CC	

APEGA PERMIT NUMBER: P09178 — SCALE: NOT TO SCALE

TITLE: **Electrical Single Line**

CLIENT: **AECOM**

PROJECT: **Roxana Public Works Yard**
Roxana, Illinois

SHEET: **ESL-01**

LEGEND:

- WASTE WATER AND GROUND WATER
- TREATED WATER
- CHILLER LIQUID
- COOLING TOWER WATER
- AIR
- VAPOURS
- NAPL
- SLUDGE

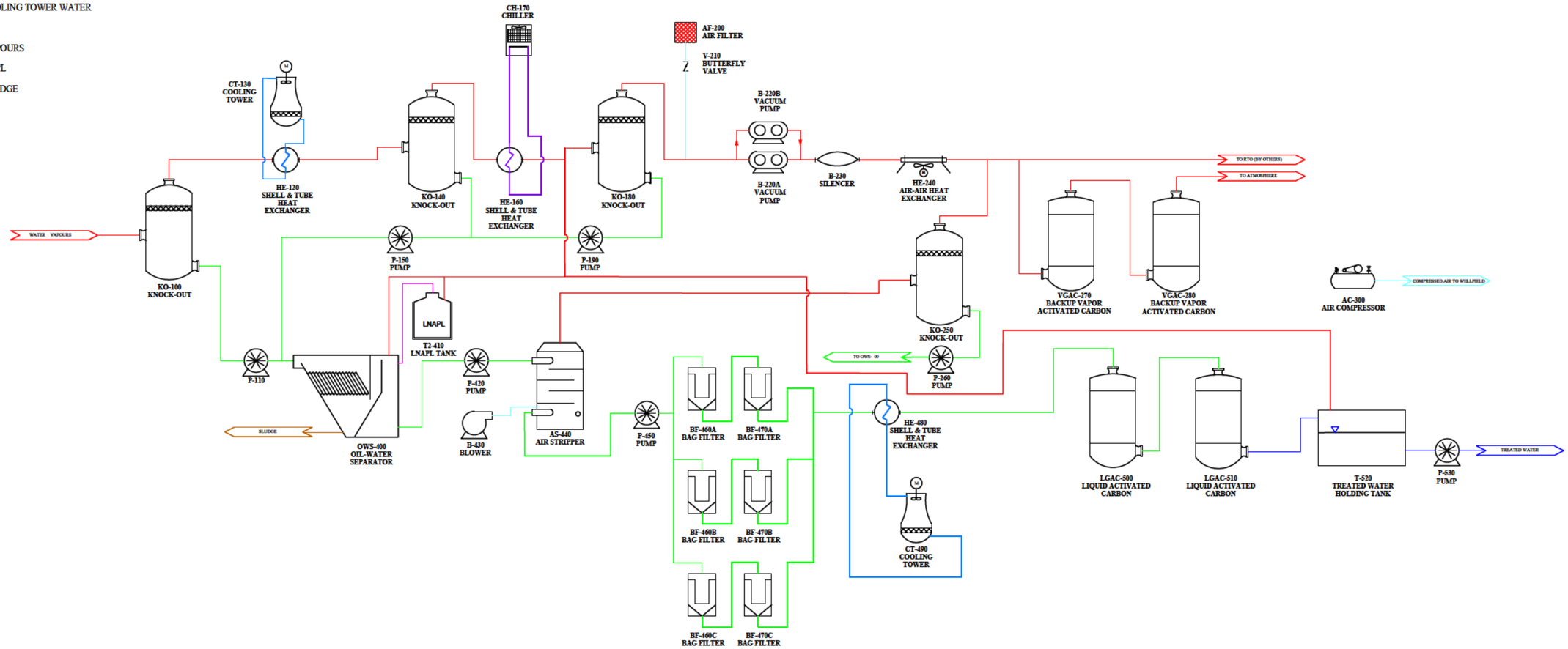

KO-100 KNOCK-OUT
3 5 FT DIA
200 gal BTWN HIGH AND LOW LEVEL

P-110
50 gpm AT 50 FT HEAD
GOULDS 150MS 1E5G6 OR EQUIVALENT

HE-120 SHELL & TUBE HEAT EXCHANGER
2E6 BTU/HR
~975 FT^2 SA
111 GPM CW
AIHT CS409646SPSTSSB OR EQUIVALENT

CT-130 COOLING TOWER
111 gpm CW
INLET: 113°F
OUTLET: 77°F
EVAPCO AT17-2J9 OR EQUIVALENT

KO-140 KNOCK-OUT
2 5 FT DIA
100 gal BTWN HIGH AND LOW LEVEL

P-150 PUMP
10 gpm AT 50 FT HEAD
GOULDS 100MS1C5E6 OR EQUIVALENT

HE-160 SHELL & TUBE HEAT EXCHANGER
1 8E5 BTU/HR
~822 FT^2 SA
19 7 gpm COOLANT
AIHT CS409646SPSTSSB OR EQUIVALENT

CH-170 CHILLER
1 8E5 BTU/HR
50% PROPYLENE GLYCOL/50% WATER
RITETEMP RTS-1604 OR EQUIVALENT

KO-180 KNOCK-OUT
2 5 FT DIA
100 gal BTWN HIGH AND LOW LEVEL

P-190 PUMP
5 gpm AT 50 FT HEAD
GOULDS 100MS1C5E6 OR EQUIVALENT

AF-200 AIR FILTER
FOR 4 IN VAPOUR LINE
500 SCFM

V-210 BUTTERFLY VALVE
4 IN

B-220A/B VACUUM PUMP
891 SCFM 21 5 LB/H WATER VAPOUR
SUTORBILT LEGEND DSL 6LV OR EQUIVALENT

B-230 SILENCER
891 SCFM
80 dB AT 5 FT HEAD

HE-240 FIN-FAN HEAT EXCHANGER
7 2E5 BTU/HR
~1250 FT^2 SA
XCHANGER AA-1000 OR EQUIVALENT

KO-250 KNOCK-OUT
2 5 FT DIA
100 gal BTWN HIGH AND LOW LEVEL

P-260 PUMP
5 gpm AT 50 FT HEAD
GOULDS 100MS1C5E6 OR EQUIVALENT

VGAC-270 BACKUP VAPOR ACTIVATED CARBON
MIN 5 0 FT DIA
5000 LB
TETRASOLV VFV-5000 OR EQUIVALENT

VGAC-280 BACKUP VAPOR ACTIVATED CARBON
MIN 5 0 FT DIA
5000 LB
TETRASOLV VFV-5000 OR EQUIVALENT

AC-300 AIR COMPRESSOR
32 SCFM
AT 150 psig
KAESER SM-13 OR EQUIVALENT

OWS-400 OIL-WATER SEPARATOR
20 µm OIL DROPLET SEPARATION AT 50 gpm
HYDROQUIP HQI-CLA-200LP-Q OR EQUIVALENT

T2-410 LNAPL TANK
250 gal

P-420 PUMP
50 gpm AT 100 FT HEAD
GOULDS 150MS 1H5A6 OR EQUIVALENT

B-430 BLOWER
1000 SCFM
CINCINNATI FAN HP-6B18 OR EQUIVALENT

AS-440 AIR STRIPPER
A:W RATIO OF 89 8
QED EZ-12 6HF OR EQUIVALENT

P-450 PUMP
50 gpm AT 50 FT HEAD
GOULDS 150MS 1E5G6 OR EQUIVALENT

BF-460A/B BAG FILTER
TRADE SIZE 2
ROSEDALE MODEL 8-30 OR EQUIVALENT

BF-470A/B BAG FILTER
TRADE SIZE 2
ROSEDALE MODEL 8-30 OR EQUIVALENT

HE-480 SHELL & TUBE HEAT EXCHANGER
2 02E6 BTU/HR
~1000 FT^2 SA
AIHT SRCS32144465PSTSSB OR EQUIVALENT

CT-490 COOLING TOWER
113 gpm CW
INLET: 113°F
OUTLET: 77°F
EVAPCO AT17-2J9 OR EQUIVALENT

LGAC-500 LIQUID ACTIVATED CARBON
3 6 FT DIA
2000 LB
TETRASOLV HPAF-2000 OR EQUIVALENT

LGAC-510 LIQUID ACTIVATED CARBON
3 6 FT DIA
2000 LB
TETRASOLV HPAF-2000 OR EQUIVALENT

T-520 TREATED WATER HOLDING TANK
5000 gal

P-530 PUMP
50 gpm AT 50 FT HEAD
GOULDS 150MS 1E5G6 OR EQUIVALENT

McMILLAN-McGEE CORP.
ELECTROMAGNETIC SYSTEMS AND SERVICES FOR THE ENERGY AND ENVIRONMENTAL INDUSTRIES
4895 - 358 STREET SE
CALGARY, AB T2B 3M9 CANADA
WWW.MCMILLAN-MCGEE.COM
PH: 403.569.5100, FX: 403.272.7201

LPE

DATE

REV.	DATE (D/M/Y)	DESCRIPTION	DRAWN BY	ORG/ ENGR	Aproved Dist
C2	2022/10/28	100% RDR ADDENDUM	JS	JS	CC
C1	2022/01/07	100% DESIGN	JS	JS	DAR
B3	2021/09/30	90% DESIGN	JS	JS	DAR
B2	2021/09/27	REVISE EQUIPMENT AND ADD SPECS	JS	JS	DAR
B1	2021/08/27	60% DESIGN	JS	JS	CC
A1	2020/03/06	FOR REVIEW AND COMMENT	TL	TL	DAR

APEGA PERMIT NUMBER: P09178 — SCALE: NOT TO SCALE

TITLE: **Process Flow Diagram**

CLIENT: **AECOM**

PROJECT: **Roxana Public Works Yard**
Roxana, Illinois

SHEET: **PFD-01**

TO BE BROUGHT WITHIN 6 FT OF V001A
WATER + VAPOURS
12"Ø CS PIPE
V001
V002
V003
PAH 100
PSH 100
PI 100
PT 100
TAH 100
TSH 100
TI 100
TT 100
0–30 inHG
0–250°F
SPARE
SECONDARY CONTAINMENT WATER
V107
V108
12"Ø CS PIPE
0–30 inHG
VI 100
V109
SP 100
V110
V106
V104
0–250°F
TI 100
V1-100
V2-100
V3-100
V4-100
V5-100
V111
LG 100
LSHHH 100
SHHHH 100
LSHHH 100
LSHHH 100
LSHH 100
LSHHH 100
LSL 100
LSHH 100
KO-100
KNOCK-OUT
EPOXY LINED CS
V105
DRAIN
2"Ø PET RESISTANT HOSE
V112
V118
V117
V116
V114
V115
SP 110
PI 110
V113
P-110
PUMP
V119
V120
2"Ø PET RESISTANT HOSE
HE-120
SHELL & TUBE
HEAT
EXCHANGER
CS
0–100 psig
PI 121
0–250°F
TI 121
TI 120
V121
V120
12"Ø CS PIPE
8"Ø HDPE PIPE
1.5"Ø EPDM HOSE
2"Ø EPDM HOSE
V122
V123
V124
0–250°F
TI 130
M
LCV 130
CT-130
COOLING
TOWER
FRP
TI 131
0–250°F
V125
V126
PI 130
P-131
PUMP
V127
V128
V129
V130
FE 130
FIT 130
FI 130
FQIT 130
BLOWDOWN WATER DISCHARGE
1.5"Ø EPDM HOSE
FQIT 010
FQIT 020
POTABLE WATER
2"Ø EPDM HOSE
V-PW01
V-PW01
TO CT-490
DRAWING P&ID-04
2"Ø EPDM HOSE
8"Ø HDPE PIPE
TO HE-105
DRAWING P&ID-02
8"Ø HDPE PIPE
0–250°F
TI 140
0–30 inHG
VI 140
V143
SP 140
V142
V140
V1-140
V2-140
V3-140
V4-140
V5-140
V144
LG 140
LSHHH 140
LSHHH 140
LSHH 140
LSHHH 140
LSHH 140
LSHH 140
LSL 140
KO-140
KNOCK-OUT
EPOXY LINED CS
V141
DRAIN
2"Ø PET RESISTANT HOSE
V151
V156
V155
V154
V152
SP 150
V153
PI 150
P-150
PUMP
V150
FROM P-190
DRAWING P&ID-02
2"Ø PET RESISTANT HOSE
LSHHH 800
LSHHH 800
KO-100
P-110
HE-120
KO-140
P-150
HE-160
KO-180
P-190
T2-600
SECONDARY
CONTAINMENT
LSHHH 610
LSHHH 610
OWS-400
T2-410
P-420
AS-440
KO-250
P-260
T2-610
SECONDARY
CONTAINMENT
FROM P-260
DRAWING P&ID-02
2"Ø PET RESISTANT HOSE
TO KO-180
DRAWING P&ID-02
1"Ø PET RESISTANT HOSE
1/2"Ø POLYETHYLENE HOSE
V404
GRAVITY DRAINING
V402
V400
OWS-400
OIL-WATER
SEPARATOR
304 SS
V1-400
V2-400
V3-400
LG 400
V4-400
V5-400
V401
V403
DRAIN
LSHHH 400
LSHHH 400
LSHH 400
LSH 400
LSL 400
TO T-550
DRAWING P&ID-04
1"Ø PET RESISTANT HOSE
RATED TO 80°C
P-401
PUMP
PI 420
V422
V420
V421
P-420
PUMP
V423
V425
FQIT 420
V410
LNAPL
T2-410
LNAPL TANK
304 SS
1/2"Ø POLYETHYLENE HOSE
TO KO-180
DRAWING P&ID-02
2"Ø PET RESISTANT HOSE
6"Ø HDPE PIPE
V-430
B-430
BLOWER
FIT 430
FI 430
FT 430
AS-440
AIR STRIPPER
304 SS
V1-440
V2-440
V3-440
LG 440
V4-440
V5-440
LSHHH 440
LSHHH 440
LSHH 440
LSH 440
LSL 440
TO P-450
DRAWING P&ID-04
2"Ø PET RESISTANT HOSE
PAH 440
PSH 440
PI 440
PT 440
0–30 inHG
TAH 440
TSH 440
TI 440
TT 440
0–250°F
V441
442
TO KO-250
DRAWING P&ID-02
6"Ø HDPE PIPE

LEGEND:

- WASTE WATER AND GROUND WATER
- TREATED WATER
- CHILLER LIQUID
- COOLING TOWER WATER
- POTABLE WATER
- AIR
- VAPOURS
- NAPL
- SLUDGE

McMILLAN-McGEE CORP.
ELECTROMAGNETIC SYSTEMS AND SERVICES FOR THE ENERGY AND ENVIRONMENTAL INDUSTRIES
4895 - 35B STREET SE
CALGARY, AB T2B 3M9 CANADA
WWW.MCMILLAN-MCGEE.COM
PH: 403.569.5100, FX: 403.272.7201

REV.	DATE (D/M/Y)	DESCRIPTION	DRAWN BY	ORIG ENGR	Aproved Dist
C2	2022/10/28	100% RDR ADDENDUM	JS	JS	CC
C1	2022/01/07	100% DESIGN	JS	JS	DAR
B1	2021/09/30	90% DESIGN	JS	JS	DAR
A1	2021/09/22	FOR REVIEW AND COMMENT	JS	JS	DAR

LPE
DATE
APEGA PERMIT NUMBER: P09178
SCALE: NOT TO SCALE

TITLE: **Process and Instrumentation Diagram**
CLIENT: **AECOM**
PROJECT: **Roxana Public Works Yard, Roxana, Illinois**
SHEET: **P&ID-01**

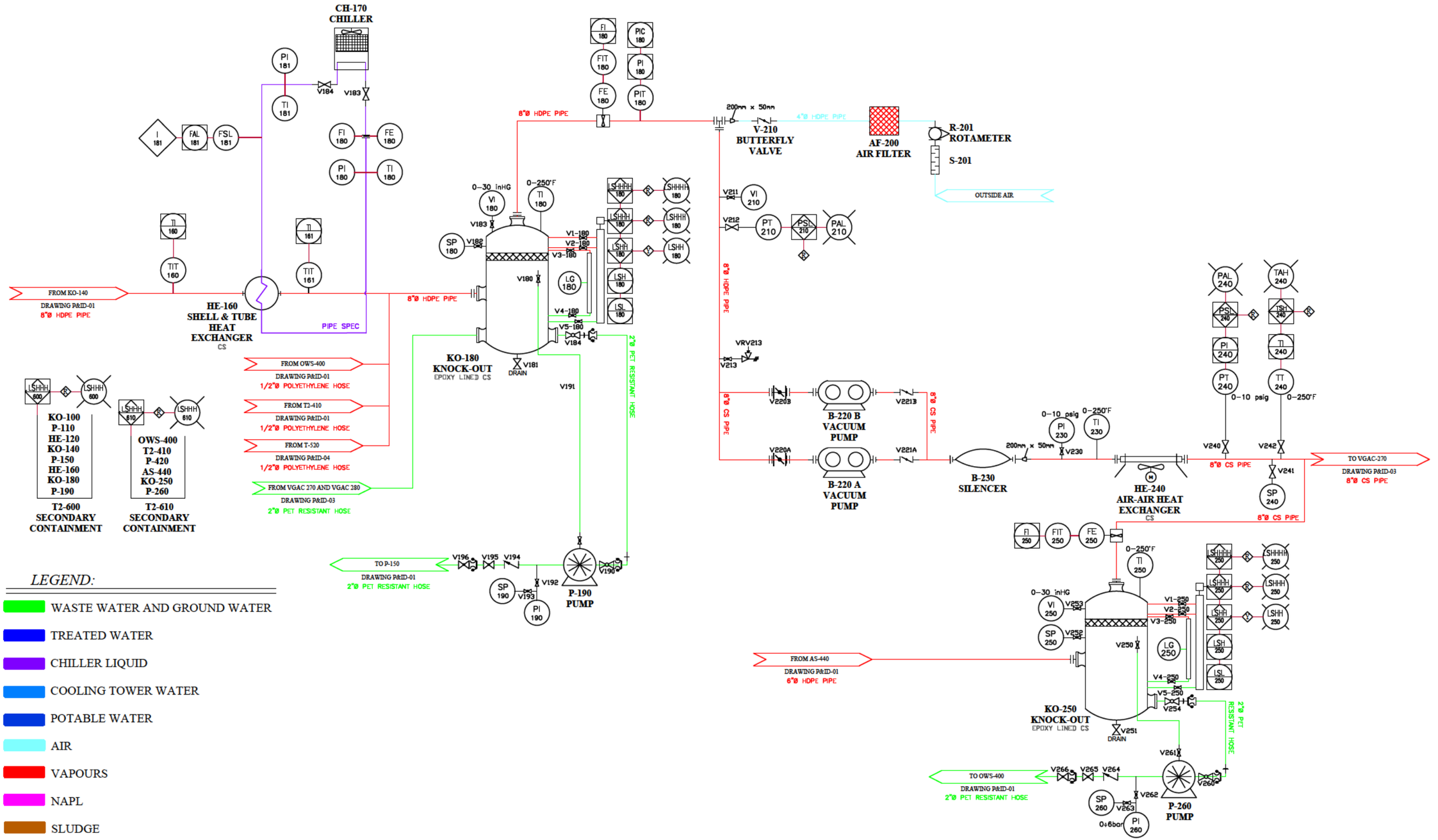

LEGEND:

- WASTE WATER AND GROUND WATER
- TREATED WATER
- CHILLER LIQUID
- COOLING TOWER WATER
- POTABLE WATER
- AIR
- VAPOURS
- NAPL
- SLUDGE

McMILLAN-McGEE CORP.
ELECTROMAGNETIC SYSTEMS AND SERVICES
FOR THE ENERGY AND ENVIRONMENTAL INDUSTRIES
4895 - 35B STREET SE
CALGARY, AB T2B 3M9 CANADA
WWW.MCMILLAN-MCGEE.COM
PH: 403.569.5100, FX: 403.272.7201

LPE

DATE

REV.	DATE (D/M/Yr)	DESCRIPTION	DRAWN BY	ORG/ ENGR	Aproved Dist
C2	2022/10/28	100% RDR ADDENDUM	JS	JS	CC
C1	2022/01/07	100% DESIGN	JS	JS	DAR
B1	2021/09/30	90% DESIGN	JS	JS	DAR
A1	2021/09/22	FOR REVIEW AND COMMENT	JS	JS	DAR

APEGA PERMIT NUMBER: P09178 | SCALE: NOT TO SCALE

TITLE: **Process and Instrumentation Diagram**

CLIENT: **AECOM**

PROJECT: **Roxana Public Works Yard**
Roxana, Illinois

SHEET: **P&ID-02**

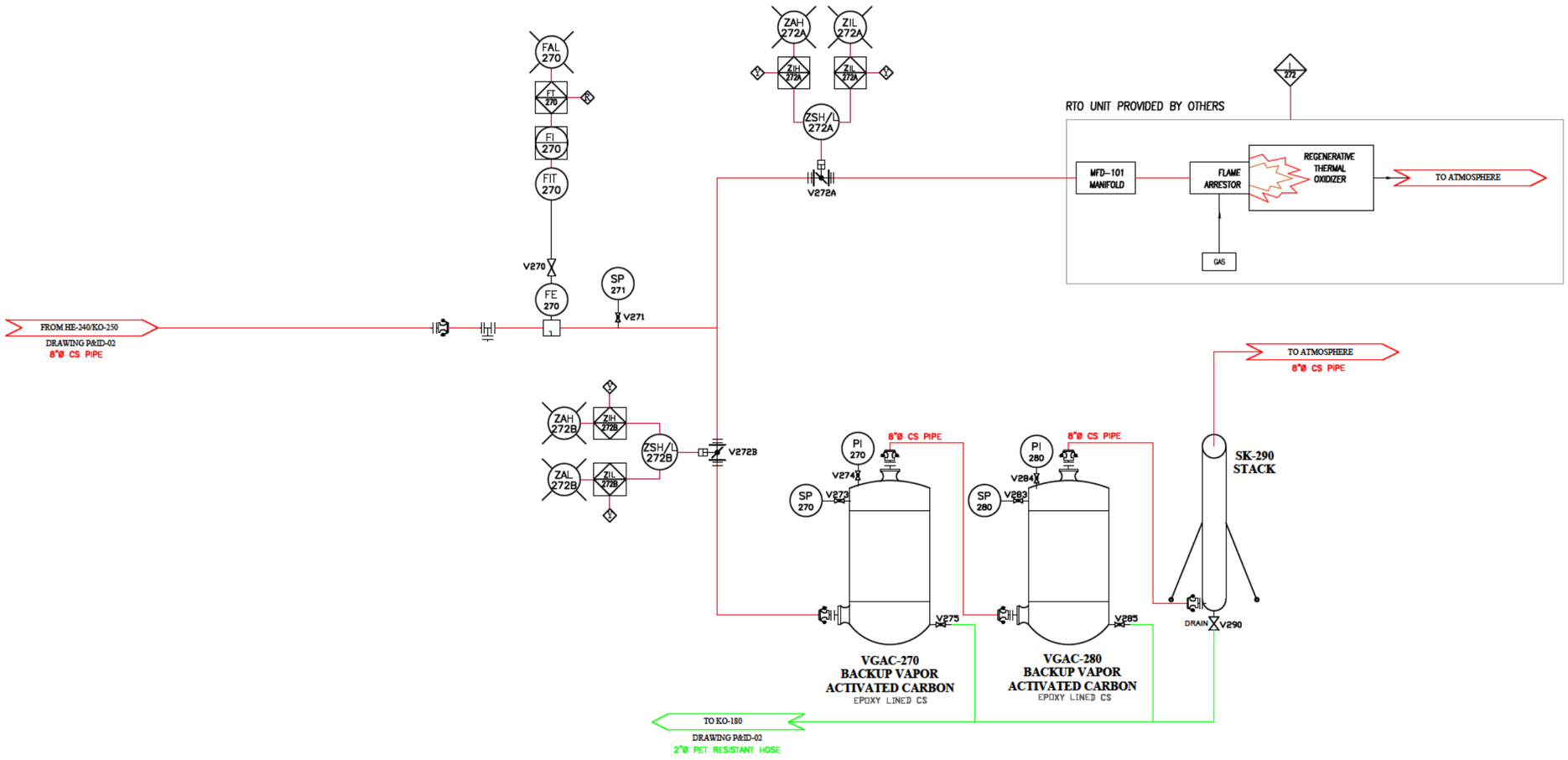

LEGEND:

- WASTE WATER AND GROUND WATER
- TREATED WATER
- CHILLER LIQUID
- COOLING TOWER WATER
- POTABLE WATER
- AIR
- VAPOURS
- NAPL
- SLUDGE

McMillan-McGee Corp.

Electromagnetic Systems and Services
For the Energy and Environmental Industries

4895 - 35B Street SE
Calgary, AB T2B 3M9 Canada

www.mcmillan-mcgee.com
Ph: 403.569.5100, Fx: 403.272.7201

REV.	DATE (D/M/Y)	DESCRIPTION	DRAWN BY	ORG/ ENGR	Aproved Dist
C1	2022/01/07	100% DESIGN	JS	JS	DAR
B1	2021/09/30	90% DESIGN	JS	JS	DAR
A1	2021/09/22	FOR REVIEW AND COMMENT	JS	JS	DAR

LPE

DATE

APEGA PERMIT NUMBER: P09178

SCALE: NOT TO SCALE

TITLE: **Process and Instrumentation Diagram**

CLIENT: **AECOM**

PROJECT: **Roxana Public Works Yard**
Roxana, Illinois

SHEET: **P&ID-03**

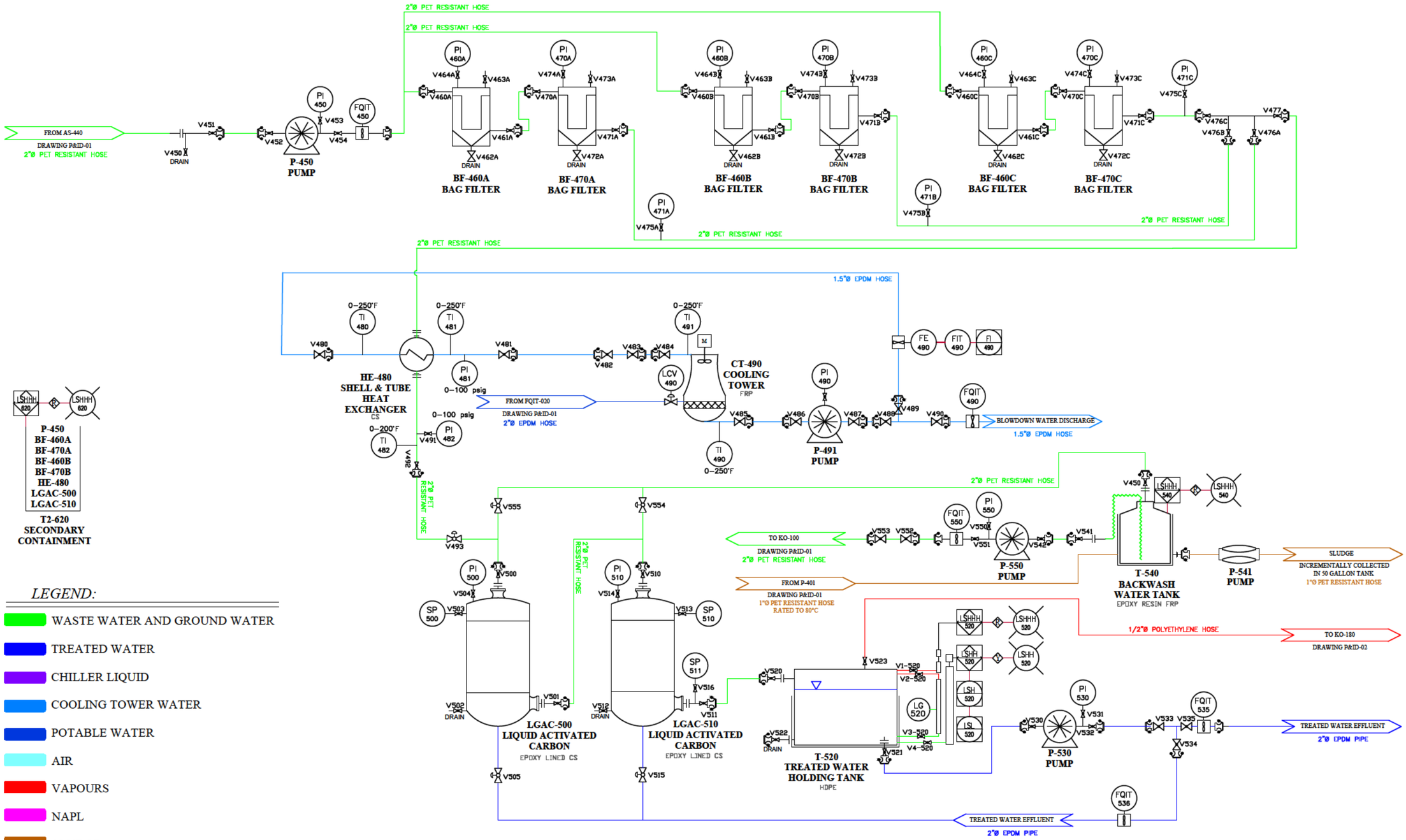

McMillan-McGee Corp.

Electromagnetic Systems and Services
For the Energy and Environmental Industries

4895 - 35B Street SE
Calgary, AB T2B 3M9 Canada

www.mcmillan-mcgee.com
Ph: 403.569.5100, Fx: 403.272.7201

LPE

DATE

REV.	DATE (D/M/YY)	DESCRIPTION	DRAWN SY	ORG/ ENGR	Aproved Dist
C2	2022/10/28	100% RDR ADDENDUM	JS	JS	CC
C1	2022/01/07	100% DESIGN	JS	JS	DAR
B1	2021/09/30	90% DESIGN	JS	JS	DAR
A1	2021/09/22	FOR REVIEW AND COMMENT	JS	JS	DAR

APEGA PERMIT NUMBER: P09178 — SCALE: NOT TO SCALE

TITLE: **Process and Instrumentation Diagram**

CLIENT: **AECOM**

PROJECT: **Roxana Public Works Yard**
Roxana, Illinois

SHEET: **P&ID-04**

Attachment A

SEE System Operations & Maintenance Plan

PREPARED FOR:

AECOM

Operations and Maintenance Plan

Roxana Public Works Yard
Roxana, Illinois

PREPARED BY:

McMILLAN-McGEE CORP

CREATORS OF ET-DSP™

Operations and Maintenance Plan
Revision C1
Roxana Public Works Yard
Roxana, Illinois

McMillan-McGee Corp.
4895 - 35B Street SE
Calgary, Alberta T2B 3M9 Canada
Ph: 403-279-7948
Fx: 403-272 -7201
Web: www.mcmillan-mcgee.com

Points of Contact:

Clayton Campbell, P.Eng.
Ph: 403.569.5104
Email: ccampbell@mcmillan-mcgee.com

David Rountree, B.S., M.S., P.E., P.Eng.
Ph: 403.569.5116
Email: drountree@mcmillan-mcgee.com

Brent Winder, BA, B.S.Sc.,
MBA Ph: 403.569.5103
Email: brent.winder@mcmillan-mcgee.com

Confidentiality Notice

This confidential document and any related presentation was prepared by McMillan-McGee Corp. for the exclusive use of the intended party and is not to be reproduced, distributed or made available, in whole or in part, to any person, company, or organization without the express written permission of McMillan-McGee Corp.

MCMILLAN-MCGEE CORP

CREATORS OF ET-DSP™

PREPARED FOR:

AECOM

October 28th, 2022

Prepared by:

Clayton Campbell

SEE Operations Contacts

Organization	Contact	Role	Contact Information
McMillan-McGee Corp. (Mc²)	Dr. Bruce McGee, PhD, PEng	Senior Technical Advisor	(W) +1 403-569-5101 mcgee@mcmillan-mcgee.com
	Brent Winder, MBA	Senior Management & Contracting	(W) +1 403-569-5103 (M) +1 403-589-8726 bwinder@mcmillan-mcgee.com
	Wayne Robella	Field Operations Manager	(W) +1 403-569-5106 (M) +1 403-461-1669 wrobella@mcmillan-mcgee.com
	Dave Perley	Master Electrician	(W) +1 403-569-5124 (M) +1 403-921-0845 dperley@mcmillan-mcgee.com
	David Rountree, MEng, PEng, PE	Senior Environmental Engineer	(W) +1 403-569-5116 (M) +1 403-921-0848 drountree@mcmillan-mcgee.com
	Clayton Campbell, PEng	VP of Engineering	(W) +1 403-569-5104 (M) +1 403-660-8561 ccampbell@mcmillan-mcgee.com
	Janine Schmitke	Project Engineer, EIT	(M) +1 403-829-8563 jschmitke@mcmillan-mcgee.com

Table of Contents

SEE Operations Contacts i
Table of Contents ii
List of Tables iv
Nomenclature iv

1. Introduction 1
1.1 Objectives 1

2. Equipment and Components 2
2.1 Steam Injection Components 2
2.1.1 Steam Boiler and Water Conditioning System 2
2.1.2 Steam Distribution Piping 2
2.1.3 Steam Injection Wells 2
2.2 Extraction and Monitoring Components 2
2.2.1 MPE Wells 2
2.2.2 Well Field Piping 3
2.2.3 Temperature Sensors 3
2.3 Treatment System Components 4
2.3.1 Knockout Tanks and Heat Exchangers 4
2.3.2 Vacuum Pump 4
2.3.3 Cooling System 4
2.3.4 Phase Separator 4
2.3.5 Air Stripper (AS) 4
2.3.6 Solids Filtration 4
2.3.7 Liquid Granular Activated Carbon (LGAC) 5
2.3.8 Vapor Granular Activated Carbon (VGAC) 5
2.3.9 Compressed Air System 5
2.3.10 Control and Automation System 5
2.3.11 Steam Boiler and Treatment System Interlocks 5

3. Commissioning and Start-Up Procedures 6
3.1 Treatment System 6
3.1.1 Acceptance Testing and Initial Startup 6
3.2 Extraction System 9
3.2.1 Acceptance Testing 9
3.2.2 Initial Startup 9
3.2.2.1 Groundwater Extraction System Startup 9
3.2.2.2 Vapor Extraction System Startup 10
3.2.2.3 Extraction System Optimization 10
3.3 Steam Injection System 11

4. Operational Approach 12
4.1 Operational Phases 12
4.1.1 Phase 1 – Establish Hydraulic and Pneumatic Control 12
4.1.2 Phase 2 – Ramp Up to Target Temperatures 13
4.1.3 Phase 3 – Maintain Temperatures and Maximize Mass Removal 14

5. Installation Requirements 15

6. Operations Tasks and Procedures 16
6.1 General Requirements 16
6.1.1 Operator Tasks 16

6.1.2 Operator Training *17*
6.2 Treatment System 17
6.2.1 Automation and Control Operation *17*
6.2.1.1 Visualizing System Information on PLC *17*
6.2.1.2 Configuring System Value and Set-Points *19*
6.2.1.3 Resetting the Alarms and Alerts *19*
6.2.1.3.1 Resetting Using the PLC *19*
6.2.1.3.2 Resetting Using the Panel Reset Button *20*
6.2.1.3.3 Remotely Reset *20*
6.2.1.4 Manual & Automated Control of Equipment *20*
6.2.2 Correct Atmospheric Pressure Reference *21*
6.2.3 Air Pressure Regulation *21*
6.2.4 Chiller Operation *22*
6.2.5 Cooling Tower Operation *22*
6.2.6 Phase Separator Operation *22*
6.2.6.1 DNAPL Removal *22*
6.3 Steam Boiler 22

7. Operations Monitoring 23
7.1 Automated Data Collection 23
7.1.1 Subsurface Temperatures *23*
7.1.2 Treatment System Monitoring *23*
7.2 Manual Data Collection 23
7.2.1 Well field Monitoring *23*
7.2.2 Water Table Elevations *23*
7.2.3 Steam Injection *23*
7.2.4 Treatment System Monitoring *24*
7.2.5 Performance Sampling *24*

8. Maintenance and Troubleshooting 25
8.1 DigiTAM™ Sensors 25
8.2 Extraction System 25
8.3 Treatment System 26
8.4 General Maintenance Schedule 27

9. Final Shutdown 29
9.1 Final SEE Shutdown 29

10. References 30

Appendix A – Sample Forms for SEE Operations ..... A

Appendix B – Technical Documentation ..... B

Appendix C – Additional Documentation C

List of Tables

Table 1 – General Maintenance Schedule.....27

List of Figures

Figure 1 – Steam Injection Flow Meter 12
Figure 2 - PLC Screen Example.....18
Figure 3 - PLC Configuration Screen Example 19
Figure 4 - Alarm Screen Example.....20

Nomenclature

Abbreviations

AS	Air Stripper
Cat5e	Category 5e
COC	Constituent of Concern
digiPAM	Digital Pressure Acquisition Module
digiTAM™	Digital Temperature Acquisition Module
DNAPL	Dense Non-Aqueous Phase Liquid
e.g.	Exempli Gratia (for example)
ESD	Emergency Shutdown Device
i.e.	Id Est (that is)
ISTT	In-Situ Thermal Treatment
JSA	Job Safety Analysis
LED	Light Emitting Diode
LGAC	Liquid-Phase Granular Activated Carbon
LNAPL	Light Non-Aqueous Phase Liquid
LOTO	Lockout/Tagout
Mc²	McMillan-McGee Corp.
MPE	Multiphase Extraction
NAPL	Non-Aqueous Phase Liquid
O&M	Operations and Maintenance
OWS	Oil-Water Separator
P&ID	Piping and Instrumentation Diagram
PID	Photoionization Detector
PPE	Personal Protective Equipment
RDR	Remedial Design Report
™	Trademark
VGAC	Vapor-Phase Granular Activated Carbon
VOC	Volatile Organic Compound

Units of Measurement

°	Degree
A	Ampere
kVA	Kilovolt-Ampere
kW	Kilowatt
V	Volt

1. Introduction

McMillan-McGee Corp. (Mc²) has prepared this Operations and Maintenance (O&M) Plan, at the request of AECOM to describe the activities and procedures that will be performed during active SEE (Steam Enhanced Extraction) remediation operations at the Roxana, Illinois site. This includes procedures and requirements for the safe and effective application of the steam injection, multiphase extraction (MPE), and data acquisition systems. This plan addresses the various phases of system operations, and includes startup, acceptance testing, operations, and shutdown procedures.

SEE is an in situ thermal treatment (ISTT) technology that uses steam to increase the temperature of soil and groundwater, such that conditions are more favorable for the extraction of volatile organic compounds (VOCs) from the subsurface. MPE is used to extract constituents of concern (COCs) partitioned between vapors, groundwater, and non-aqueous phase liquids (NAPLs), which are subsequently processed in an aboveground treatment system. Heating and extraction are monitored using a combination of automated and manual data acquisition instruments. The steam injection and treatment system are interlocked in order to ensure safety in the event of upset conditions.

1.1 Objectives

The purpose of this plan is to describe the activities and procedures that are required to effectively operate the SEE and data acquisition systems over the life cycle of the project. The plan will enable operations personnel to:

1. Understand the different phases of ISTT operations;
2. Gain a conceptual and practical understanding of how to safely operate the SEE system and its various components;
3. Understand the scope of work required for initial startup, operations, and final shutdown of the thermal remediation equipment, as well as the safe work procedures required to accomplish these tasks;
4. Monitor, prevent, identify, and correct potential operational issues associated with the remediation equipment, such that treatment efficacy is maximized and hazards to site personnel are minimized;
5. Implement a program to monitor the performance of the SEE system components;
6. Implement safety procedures during O&M of the remediation equipment; and,
7. Optimize treatment effectiveness.

In this capacity, operating data collection forms **(Appendix A)**, equipment technical documentation **(Appendix B)**, and additional operations and maintenance documentation **(Appendix C)** are also provided.

2. Equipment and Components

2.1 Steam Injection Components

The SEE system consists of several components, which are described in the following subsections:

2.1.1 Steam Boiler and Water Conditioning System

The steam boiler is a unit responsible for producing high-pressure steam for the steam injection wells. The steam boiler is natural gas fired. It has a water conditioning system that pre-treats the potable water supply. The unit is contained in a stand-alone inclement weather trailer. Its primary components include feed water pumps, conditioning system, boiler, steam header, and condensate tank.

2.1.2 Steam Distribution Piping

The steam injection piping is connected to the steam injection well heads and the steam boiler. The lateral connection for each steam well head to the main conveyance piping is flexible 1 inch diameter steam hose. Each connection point of the main header has a 1 inch ball valve to adjust the flow rate and isolate the well from the steam system when necessary. The main header piping for the extraction system is constructed of 2 inch to 3 inch diameter schedule 40 carbon steel pipe that runs to the steam boiler in the equipment staging area.

2.1.3 Steam Injection Wells

The steam injection wells consist of a 2 inch diameter, 0.010 inch slotted 304 stainless steel (SS) screens. Each well is completed with an adapter and wellhead and is then piped to the steam boiler. Each wellhead has a temperature gauge, orifice plate meter, a low and high pressure gauge, and a sample port/relief valve.

2.2 Extraction and Monitoring Components

The MPE system consists of several components, which are described in the following subsections:

2.2.1 MPE Wells

The MPE wells are used to extract vapors, using vacuum extraction, and liquids (including groundwater and potential NAPLs), using slurper tubes and/or pneumatic pumps. Each MPE well has a slurper tube assembly and/or downhole pneumatic pump, depending on the design criteria for the site, complete with a compressed air assist or supply, respectively. MPE wellheads are completed with vapor temperature and vacuum monitoring gauges. The boiler and extraction systems are interlocked in case of upset conditions.

2.2.2 Well Field Piping

Extracted liquids and vapors are connected to a network of well field conveyance piping, which is used to direct the fluids to an onsite treatment system. These are interconnected with dresser couplings, and sloped on pipe racks at approximately 1 degree from horizontal, to promote gravity drainage of condensate and extracted liquids towards the treatment system.

2.2.3 Temperature Sensors

DigiTAM™ strings are assemblies that contain digital temperature sensors, spaced vertically at 1 m intervals, which are deployed in drop tubes or monitoring wells throughout the thermal treatment volume. Monitoring downhole temperatures within the well field is important in order to inform the operation of the SEE system.

2.3 Treatment System Components

The aboveground treatment system consists of several components, including components used for interconnection of the treatment system, such as level switches, site glasses, float sensors, and other devices. The use and location of aboveground treatment system components are briefly described in the following subsections.

2.3.1 Knockout Tanks and Heat Exchangers

The knockout tanks function to separate the extracted liquids and vapors into separate streams for subsequent treatment. The heat exchangers cool and dry the extracted vapor stream, which creates additional condensate that is subsequently separated by the knockout tanks. The KO-90 knockout tank also provides a means to remove silt, particulates, and potential NAPLs that may be present at the inlet of the treatment train.

2.3.2 Vacuum Pump

The vacuum pump is responsible for creating negative pressure to extract water and vapors from the soil, which will be separated by the knockout tanks.

2.3.3 Cooling System

The cooling system consists of a cooling tower attached to the second stage of heat exchanger and a chiller connected to the third stage. The cooling system function is to lower the extraction vapor temperature and separate all condensate from the extracted vapor. The cooling tower and chiller are responsible for the cooling fluids, which are used to exchange heat in the heat exchangers.

2.3.4 Phase Separator

The phase separator/oil-water separator (OWS) is used to separate NAPLs from the extracted groundwater and liquid condensate stream. Both light non-aqueous phase liquid (LNAPL) and dense non-aqueous phase liquid (DNAPL) streams are collected and drained manually by the operator.

2.3.5 Air Stripper (AS)

An air stripper (AS) is used to volatilize VOCs dissolved in groundwater into the vapor stream by passing air through a liquid vessel. Flow is forced through trays and/or packing media, which increases the interfacial area and subsequent volatilization.

2.3.6 Solids Filtration

Solids filtration will be done by a set of bag filter units. Their function is to retain remaining solid particles from the effluent that is sent from the knockout tanks in the beginning of the process and from the phase separator before going into the liquid-phase granular activated carbon (LGAC) units.

2.3.7 Liquid Granular Activated Carbon (LGAC)

LGAC vessels are used to treat VOCs dissolved in groundwater through the sorption of organic constituents onto the surface of the carbon media. The lead and lag vessels can be swapped, if required, and may need to be backwashed periodically, if the differential pressure across the vessels is outside of normal conditions. Spent media is removed, characterized, and disposed of or regenerated at offsite facilities.

2.3.8 Vapor Granular Activated Carbon (VGAC)

VGAC vessels are used to treat VOCs in the vapor stream through sorption of organic constituents onto the surface of the carbon media and are used as the primary means of vapor treatment. Spent media is removed, characterized, and disposed of or regenerated at offsite facilities.

2.3.9 Compressed Air System

The compressed air system provides a stable and continuous source of compressed air in accordance with the design specification. Compressed air is used throughout the treatment system including powering the pneumatic pumps.

2.3.10 Control and Automation System

All treatment system equipment is controlled using a local Programmable Logic Controller (PLC) installed into an electrical panel which is responsible for automatic equipment electrical control and monitoring. Motor protection, alarms conditions, interlocks and telemetry are designed into the panel and controlled by the PLC. The PLC has a 7-inch Human Machine Interface (HMI) for the operator to visualize, configure, and control the system.

2.3.11 Steam Boiler and Treatment System Interlocks

The steam boiler and treatment system are interlocked such that a change in the state of one system causes automated changes to occur in the other. Sensors within the treatment system are monitored and interpreted as run states of green, yellow alarm, or red alarm. A green system run state indicates that the treatment system is operating within its design parameters. A yellow alarm indicates reduced extraction capability, triggering the steam boiler to decrease production (~50%). A red alarm indicates the extraction system is offline, signaling the steam boiler to turn off. After three hours in this state, a manual reset is required to restart the SEE system.

3. Commissioning and Start-Up Procedures

The extraction and treatment systems must be operational before the SEE system is started. Acceptance testing and commissioning of the extraction and treatment system will be performed by Mc^2 personnel.

3.1 Treatment System

3.1.1 Acceptance Testing and Initial Startup

Acceptance testing of the treatment system will involve verification that all extraction components are (i) functional and (ii) capable of being operated as per the design specifications outlined in the Remedial Design Report (RDR). The following items will be verified:

1. Confirm that the treatment system is consistent with the Process & Instrumentation Diagrams (P&IDs), equipment layout (EQL), and any other relevant drawings. Specific components include:
    a. Tanks, vessels, heat exchangers, and other equipment;
    b. Plumbing connections;
    c. Gauges;
    d. Valve numbers; and,
    e. Flow meters.
2. Confirm that all wiring installed is consistent with the electrical single line diagrams (ESLs) and all connections are appropriately terminated. Prior to supplying line power to the treatment system, verify:
    a. Disconnects (in the open position);
    b. Pull test wires;
    c. Unused pairs;
    d. Line shorts;
    e. Labeling;
    f. Connectors and connections.
3. Check the phase rotation of line power to treatment system;
4. Check the phase rotation of backup power to treatment system:
    a. Test emergency stop; and,
    b. Perform automatic transfer switch test.
5. Check the phase rotation of each component within treatment system. Specific components include:
    a. Transfer pumps;
    b. Cooling tower motors;
    c. Blower motors;

d. Heat exchanger motors; and,
e. Cabinet cooling fans.

6. Check that all instrumentation is functional and accurate. Specific instrumentation includes:
    a. Level trees;
    b. Level probes;
    c. Vacuum transducers;
    d. Pressure transducers;
    e. Pressure switches; and,
    f. Ultrasonic level transducers.
7. Test the functionality of the treatment system instrumentation and their control responses:
    a. Verify input/output;
    b. Verify transfer pump control response;
    c. Verify yellow alarm response;
    d. Verify red alarm response; and,
    e. Verify blue alarm response (if applicable).
8. Verify all process interconnections, including:
    a. Series and parallel plumbing configuration of individual treatment components;
    b. Flow direction; and,
    c. Safety pinned cam lock connections.
9. Check all sealing gaskets:
    a. Clean and check KO-90 tank manway and door gaskets;
    b. Cam lock gaskets;
    c. Heat exchanger gaskets;
    d. Oil water separator gaskets; and,
    e. Air stripper gaskets.
10. Verify that all filters are installed, including:
    a. Bag filters;
    b. Clay filters; and,
    c. Sand filters.
11. Close all drain ports, including:
    a. Transfer pump volutes;
    b. Vessels drains:
        i. Oil water separators;

ii. Air strippers;
iii. Bag filters;
iv. Knockout vessels;

c. Blower silencers; and,
d. Compressed air receivers.

12. Ensure all scavenge lines installed and plumbed correctly;
13. Perform well field piping compressed air pressure test, verifying that all valves are in the correct state, and using pressures that are 1.5 times above the design pressure for at least 30 minutes, or as needed to determine there is not a significant drop in pressure.
14. Perform well field piping treated water liquid test, varying that all valves are in the correct state, and supplying municipal water to well field proximity locations.
15. Perform treatment system liquid transfer test, verifying that all valves are in the correct state:
    a. Perform initial flow meter readings;
    b. Recirculate treatment system through multiple transfers; and,
    c. Discharge municipal water to receiving location.
16. Verify vacuum and pressure reliefs are installed;
17. Check blower condition point:
    a. Close all sources of applied vacuum to the formation;
    b. Vent well field piping to atmosphere;
    c. Verify all valves are in the correct state;
    d. Operate the blower; and,
    e. Inspect the vacuum system for leaks.
18. Set the groundwater extraction apparatus, verifying:
    a. Depth;
    b. Air supply;
    c. Timing;
    d. Pressure; and,
    e. Volume.
19. Verify extraction rate and treatment system discharge, recording flow meter readings once per hour, and adjusting groundwater pump timing to match design extraction rates **(Section** Error! Reference source not found.**)**;
20. Apply vacuum to the well field, recording flow meter readings once per hour, and adjusting applied vacuum and groundwater pump

timing to match design extraction rates **(Section** Error! Reference source not found.**)**;

21. Optimize treatment system transfer volumes; and,
22. Perform initial treatment checklist readings.

3.2 Extraction System

3.2.1 Acceptance Testing

Acceptance testing of the MPE system will involve verification that all associated components are (i) functional and (ii) capable of being operated as per the specifications outlined in the RDR. Specific components that will be verified include:

1. Slurper tubes and/or pneumatic pumps;
2. Wellhead gauges and valves;
3. Wellhead gaskets and seals;
4. Connections from the wellheads to the well field piping; and,
5. Interconnection of the well field piping.

3.2.2 Initial Startup

Initial startup (commissioning) of the MPE system will involve the initiation of vapor and liquid extraction from the well field, balancing the applied vacuum and liquid extraction timers to establish the design extraction rates outlined in the RDR. After a baseline condition is established, steam injection will slowly be increased to design injection rates, while continuously optimizing the applied vacuum and liquid extraction timers. A ratio of extracted to injected water greater than unity will be used in combination with the hydraulic gradients established from manual water table level measurements to evaluate the achievement of hydraulic control. Pneumatic control will be monitored using vacuum gauges at locations within the well field. After the achievement of hydraulic and pneumatic control, the SEE system can be started.

3.2.2.1 Groundwater Extraction System Startup

Groundwater extraction is initiated by:

1. Verifying the integrity of the air supply lines;
2. Setting the compressed air timers **(Appendix C)**; and,
3. Opening the compressed air supply valves to individual slurper tubes or pneumatic pumps.

Compressed air pressure and groundwater flow measurements will be collected to verify the operation of the slurper tubes or pneumatic pumps at each extraction well. Design flow rates and hydraulic control will be established by iteratively adjusting the compressed air timers, applied vacuums, and ball valves on the liquid discharge lines.

3.2.2.2 Vapor Extraction System Startup

Vapor extraction is initiated by applying vacuum to the well field using the main blower and opening the associated ball valves at individual well heads, using dilution air or blower speed to gradually increase the applied vacuum up to design values. As the applied vacuum is modified at individual well heads, the associated liquid extraction must be iteratively adjusted to compensate for these changes. The operation of the vacuum system will be verified by collecting vacuum gauge measurements at each extraction well. Vapor extraction rates will also be measured at individual extraction wells to confirm that the system is balanced and that design flow rates are achieved.

3.2.2.3 Extraction System Optimization

After the liquid and vapor phase extraction components are started, the extraction system will be further optimized by:

1. Measuring and adjusting the applied vacuum at individual extraction wells;
2. Verifying groundwater extraction rates at individual extraction wells by visually inspecting the discharge lines, using a knockout pot assembly, or performing a bucket test;
3. Measuring the overall groundwater extraction, injection, and discharges rates using the totalizers within the treatment system;
4. Measuring vapor extraction rates at individual extraction wells using pitot tubes and a portable manometer;
5. Measuring water table elevations using an interface probe;
6. Measuring vapor VOC concentrations at the inlet, midpoint(s), and discharge of the treatment system using a PID; and,
7. Measuring the total vapor extraction, dilution, and discharge rates using the pitot tubes within the treatment system.

This information will be collected and recorded at least once per day during Phase 1 of the project. These measurements will be used to optimize the extraction system and ensure hydraulic and pneumatic capture. If required, potential adjustments to the vapor extraction components include varying the overall applied vacuum, regulating the ball valves at individual vapor discharge lines, or introducing dilution air through the sample valves. If required, potential adjustments to the liquid extraction components include regulating the ball valves at individual liquid discharge lines, regulating the air assist ball valves, changing the compressed air timers, or breaking the air assist lines to atmosphere and adjusting the depth of the slurper tubes.

3.3 Steam Injection System

The steam injection wells will be constructed per WHD-02 in the RDR. Each well will have individual flow control (gate valve), pressure control, and temperature and pressure monitoring. Conveyance piping will feed each well via a flexible steam hose.

Warm-up procedure as follows:

1. After pneumatic and hydraulic control has been established, and a leak test has been performed, the steam injection system may be warmed up. The steam boiler will be started up per the startup procedures in Appendix B. All injection well control valves (gate valve) and pressure regulators are to be cracked open to allow minimal flow;
2. As the piping warms up, a significant amount of condensate will be produced and it will either be managed by the drip legs or pushed down the wells;
3. The flow meter differential pressure condensate legs will start to fill with water. It is important that these lines be allowed to fill with water as the water protects the gauge from direct steam contact; and,
4. As the system warms up and comes up to pressure the pressure regulators will need to be adjusted to match the design flow (differential reading) provided by the project engineer. A differential pressure gauge like the one shown in Figure 1 will need to be read and converted to a mass flow rate.

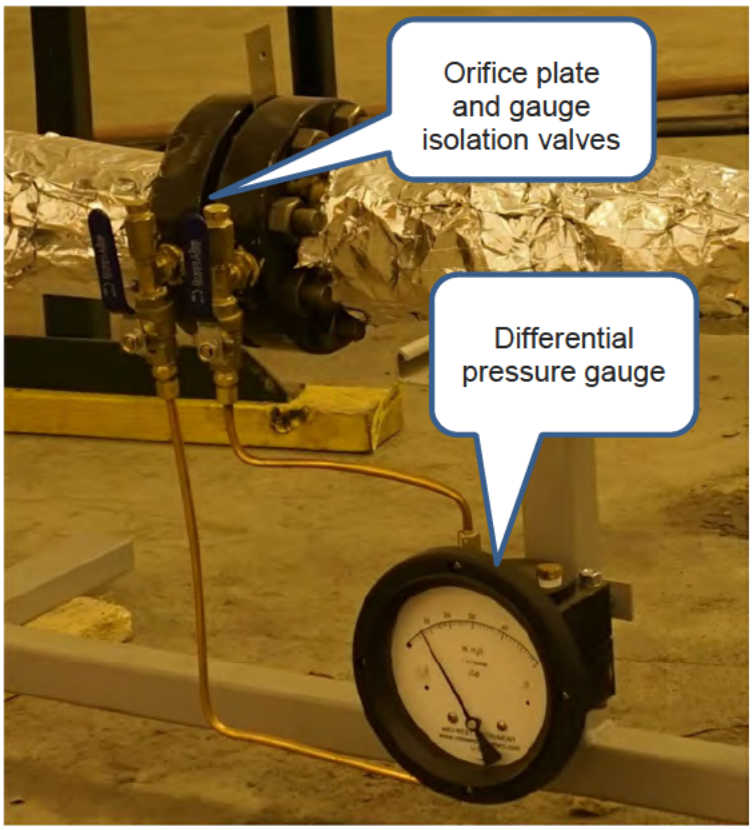

Figure 1 – Steam Injection Flow Meter

4. Operational Approach

SEE operations will be performed until field sampling and monitoring data indicates that the project goals detailed in the RDR have been met and/or the client requests system shutdown.

4.1 Operational Phases

The following operational phases are typical of an SEE application:

- Phase 1 – Establish hydraulic and pneumatic control;
- Phase 2 – Ramp up to target temperatures;
- Phase 3 – Maintain temperatures and maximize mass removal; and,
- Phase 4 – Cooldown period.

4.1.1 Phase 1 – Establish Hydraulic and Pneumatic Control

Hydraulic and pneumatic control will be established before active heating commences, and will be achieved by operating the extraction, injection, and treatment systems prior to active heating. It is proposed that this period lasts approximately one to two weeks, or as agreed upon between all parties, such that (i) initial groundwater extraction is performed at ambient temperatures, (ii) initial mass loading to the thermal system during heating is reduced. An extended shakedown period of cool extraction can avoid

potential energy usage inefficiencies associated with aggressive extraction or prolonged downtime at elevated temperatures. During this phase of operations, mobile NAPLs will also be extracted, if present within the delineated free product area, using dedicated stinger tubes connected to a double diaphragm pump at several well locations.

Hydraulic control will be monitored using totalizers and comparing the volume of water that is extracted against the volume of water that is injected as steam. A ratio of extracted to injected water greater than unity will be used in combination with the hydraulic gradients established from water level measurements to evaluate the achievement of hydraulic control. If data indicates a loss of hydraulic control, extraction and injection rates will be modified to correct the condition.

Pneumatic control will be monitored using vacuum gauges at locations within the well field. The absence of fugitive emissions above ambient or expected values will be used in combination with measurements of applied vacuum at gauges within the well field to evaluate the achievement of pneumatic control. If data indicates a loss of pneumatic control, photoionization detector (PID) readings will be collected and injection rates will be modified to correct the condition.

It is anticipated that hydraulic and pneumatic control will be achieved after one to five days of active extraction. After this baseline condition is established, steam injection rates will slowly be increased to design conditions, while monitoring the aforementioned hydraulic and pneumatic control criteria, over the remainder of this phase of operations. Design extraction rates, vacuums, and other operational parameters are detailed in the RDR.

4.1.2 Phase 2 – Ramp Up to Target Temperatures

After flow rates are adjusted to establish pneumatic and hydraulic control, the SEE system will be activated and the steam to the injection wells will be increased to the design range detailed in the RDR. Manual readings from both the well field and water totalizers on the boiler will be used to control and adjust the injection rates to individual wells.

Extraction wells will be operated under applied vacuum, and based on temperatures, vacuum, pitot tube and PID measurements at the wellheads, optimized to maximize the capture of VOC vapors. Liquid extraction rates will be adjusted to enable the capture of NAPLs and dissolved VOCs, while ensuring that convection heat transfer mechanisms are propagating heat throughout the treatment volume as desired. Hydraulic and pneumatic control criteria will be continuously monitored, and adjustments will be performed to the system, as appropriate. The treatment system will be operated and maintained to ensure treatment and discharge compliance, while minimizing the alarm conditions that are interlocked with boiler shutdown (Section 2.3.11). Periodic checks and balances will be performed on the treatment system as needed to minimize alarm conditions.

During this phase of operations, the steam injection, extraction, and treatment systems will be continuously optimized based on collected data (Section 7). SEE optimization procedures may include:

1. Adjusting the steam injection rates;
2. Altering liquid and vapor extraction rates;
3. Adjusting pumping levels in the MPE wells; and,
4. Focused injection/extraction based on temperature readings.

Significant operational changes will be discussed with all parties during weekly conference calls prior to implementation.

Ramp up operations will continue until the target temperatures are reached, which is estimated to take approximately 60 to 90 days, based on the temperature response modeled in the RDR. After the achievement of target temperatures throughout the treatment volume, the project will proceed to the next phase of operations.

4.1.3 Phase 3 – Maintain Temperatures and Maximize Mass Removal

After target temperatures have been achieved, operations activities will focus on maximizing mass removal, while maintaining target temperatures. Procedures to maximize mass removal may include performing PID measurements or fluid sampling at individual wellheads, and subsequently increasing the applied vacuum, extraction rate, and/or steam injection rate in specific regions of interest. If appropriate, steam injection may be decreased or shut off within subsections of the heated volume that are deemed to no longer require active thermal treatment. Pulsed operations may also be performed, where individual steam well injection rates and applied vacuums are varied such that regions of the subsurface are repeatedly pressurized and depressurized. This can facilitate the transport of any remaining VOC vapors towards extraction points.

This phase of operations will continue until the project goals for soil and groundwater cleanup have been met and/or the client requests to discontinue active heating operations.

5. Installation Requirements

Before startup and operations, all components of the SEE system need to be installed, tested, and verified. The following tasks must be completed before startup and commissioning:

1. Steam, extraction and sensor wells installation. Complete the installation of the steam wells, extraction wells, and sensor wells, as per the design drawings.
2. Utility connection. Complete the connection of the main distribution panel(s) to the utility step down transformer. Water supply and discharge lines must be connected to the treatment system and boiler, as per the design drawings.
3. ESD connection. ESDs will be interlocked to enable the shutdown of the system from a single location.
4. Network communication setup. Cat5e cable is used to connect the data acquisition panels to the onsite server and database. The onsite server will communicate through a virtual private network with a server at the Mc² office in Calgary that facilitates remote monitoring and data presentation. An internet connection must be available at the site for automated operations monitoring and data collection.
5. Extraction system installation. The extraction system consists of MPE wells and well field conveyance piping. Temperature and vacuum gauges will be installed on the extraction wells as per the design drawings.
6. Steam conveyance piping installation. The steam injection system consists of injection wells and well field conveyance piping. Temperature and flow gauges will be installed on the injection wells as per the design drawings.
7. Treatment system installation. Installation of the aboveground treatment system must be completed prior to the start of operations.

Mc² personnel will provide both oversight and construction management services related to the SEE install. Construction activities associated with the SEE system and design specifications are presented in the RDR.

6. Operations Tasks and Procedures

6.1 General Requirements

Under normal operating conditions onsite operators will operate the extraction and treatment system, the steam boiler, as well as perform manual data collection and maintenance activities. During operations, the extraction and treatment system require daily inspection and maintenance (Appendix A), and in the event of alarm conditions, operator intervention for correction. SEE maintenance activities generally minimal, but some tasks are required for system optimization. The SEE system will be operated in accordance with the project design specifications, or modified based on the active site conditions encountered, as agreed upon between all project stakeholders.

6.1.1 Operator Tasks

Before performing any operations and maintenance tasks, onsite operators must familiarize themselves with the appropriate safety protocols, JSA procedures, and PPE requirements (See site HASP). Project engineers and onsite operators will communicate at least once per day, and onsite operators are also required to (i) submit daily reports to Mc² project engineers and (ii) upload field data to the project website for presentation.

Onsite personnel may be required to perform the following tasks:

1. Well field and treatment system monitoring – Onsite operators will acquire performance monitoring data to inform potential adjustments to the extraction and treatment systems. Specific duties may include the following:
    a. Recording pressure, temperature, flow rate, and/or other data routinely from the instrumentation installed;
    b. Sampling at specific points along the treatment system, as well as in the well field, if applicable;
    c. Recording water levels in monitoring wells;
    d. Recording electrical and water utility meter usage;
    e. Recording any abnormal conditions that may indicate a safety hazard or compromise in system performance, and subsequently informing project engineers; and,
    f. Performing emergency shutdown procedures if system operations pose a hazard to onsite personnel or equipment, and reactivating the system as directed when the conditions are remedied.
2. Extraction and treatment system operations and maintenance – Onsite operators will adjust extraction and treatment system parameters and perform repairs as necessary. Specific duties may include:
    a. Adjusting blower speed, dilution air, or valves to control applied vacuum and vapor extraction;

b. Adjusting valves or air assist timers to control liquid extraction from slurper tubes or pneumatic pumps;

c. Adjusting and optimizing vapor and liquid extraction within the well field to maximize constituent removal;

d. Backwashing vessels and assisting with change-outs;

e. Identifying breakthrough, fouling, scaling, freezing, cracking, or breakdown of system components, and performing associated maintenance and repairs as needed;

f. Implementing biocide, biodispersant, demulsifiers, or other treatment process amendments as needed; and,

g. Responding to alarm conditions in a safe and efficient manner, as well as assisting with troubleshooting, root cause analysis, and potential system modifications, as required.

Individual SEE system components may require shutdown and LOTO when maintenance activities are being performed. Mc² technical staff will evaluate each scenario with the onsite operator to verify shutdown and LOTO requirements prior to performing these activities.

6.1.2 Operator Training

Onsite operators will be trained on how to safely operate and maintain the SEE system. Training will consist of site-specific emergency and shutdown and the JSA procedures (See site HASP).

In addition, operators will be trained on the use of PPE for these tasks, including donning and doffing procedures. PPE requirements are listed in the JSAs (See site HASP). Note that onsite operators must be trained by Mc² technical staff. Onsite operators must also be familiar with any other site-specific documentation, including the site HASP.

6.2 Treatment System

The following sections describe specific subsystem and equipment operation procedures. Some equipment procedures are better described within the supplier operation manual located on the **Error! Reference source not found.**.

6.2.1 Automation and Control Operation

The Treatment System is fully controlled by a PLC device that has an HMI for system data visualization and configuration. All logic, graphical interface, and controls are custom made for each project.

For this purpose, the images presented in this section are representative and are subjected to change.

6.2.1.1 Visualizing System Information on PLC

All data from the system is collected by the PLC. These include, but are not limited to: pressures, temperatures, level transmitter outputs, motor states, and level switches signals. The information gathered within the PLC is made available on 7-inch touch screen that allows the operator to check all current

operating states. These values update every 10 milliseconds. All collected information is easily found navigating through the PLC menu main pages and through each of the subpages as highlighted in Figure 2.

The PLC menu main pages have the following items:

1. HOME: Where the system characteristic and main state is presented, as well as alarm conditions;
2. INFO: Where all the system information is placed. This page has several subpages that represent different parts of the system.
3. GRAPHS: The recent historic data is shown in a graphical format.
4. ALARM: This menu item displays all current alarm conditions.
5. TIME: Where all equipment operation hours are displayed.
6. CONFIG: This menu item is where the system configuration is performed. Where the set points, alarm values and specific transmitter configurations are set.

NOTE: Some items are password protected that only authorized personnel may access.

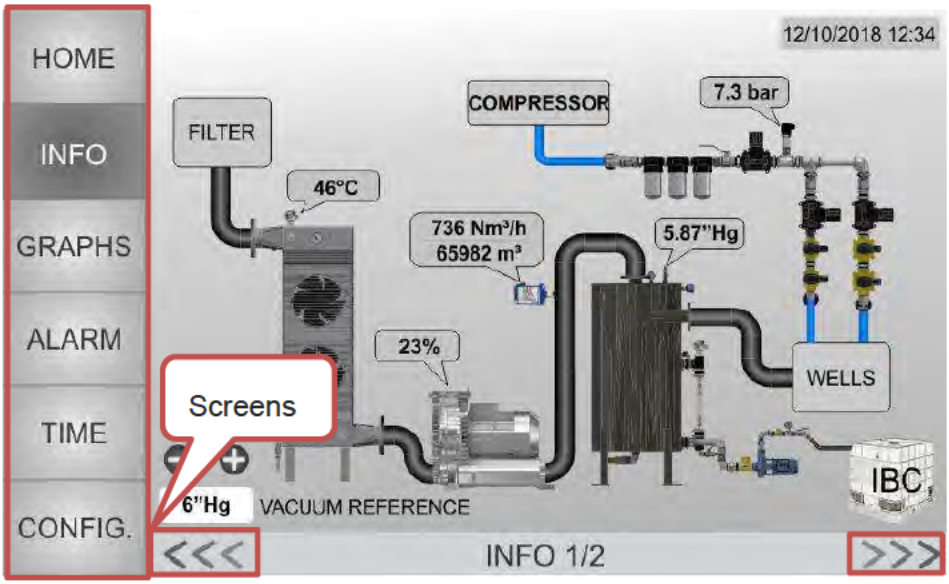

Figure 2 - PLC Screen Example

6.2.1.2 Configuring System Value and Set-Points

The system set-points for all configurable equipment are found in the CONFIG menu item. To navigate to this menu and change or confirm the set-points values that are set, proceed according to the following:

NOTE: All white input boxes are editable, while the grey ones are not.

1. On the MENU, tap on the CONFIG. item;
2. Navigate to the desired set-point value;
3. If the value needs to be changed, click on the value, the insertion value screen will be shown and the new value can be entered using the on-screen keyboard.
4. When the value is set, hit the ENTER key to acknowledge the change; and,
5. If ESC is pressed, no change to the value will be made and the screen returns to the LAST screen visited.

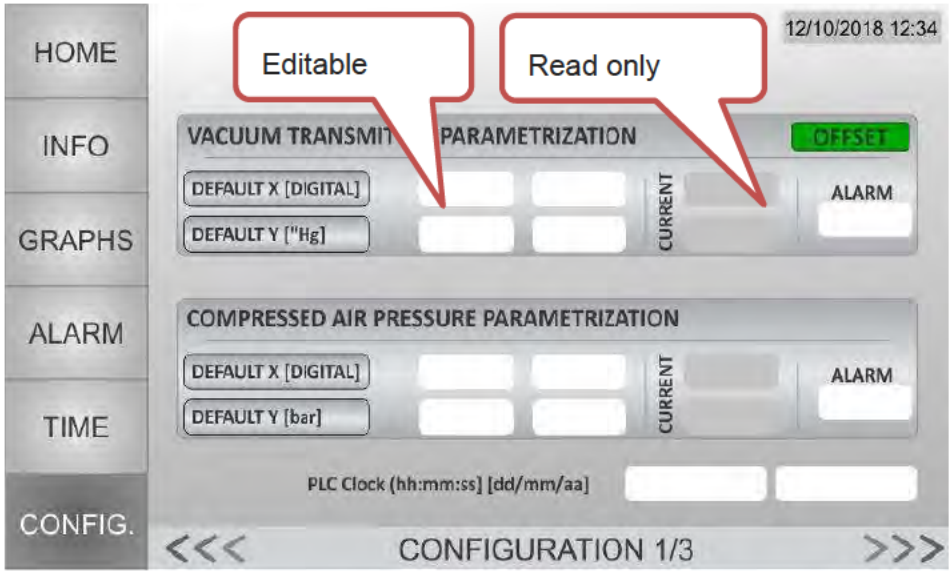

Figure 3 - PLC Configuration Screen Example

6.2.1.3 Resetting the Alarms and Alerts

The system generates and logs all alarms. An alarm, once set, remains set until a manual alarm reset is made. There are three ways of resetting the alarms.

NOTE: If the system condition that generated the alarm was not correct prior to alarm resetting, the alarm will not clear until the condition is fixed.

6.2.1.3.1 Resetting Using the PLC

On the PLC screen perform the following procedure:

1. Navigate to the HOME menu item, as presented on Section 6.2.1.1;

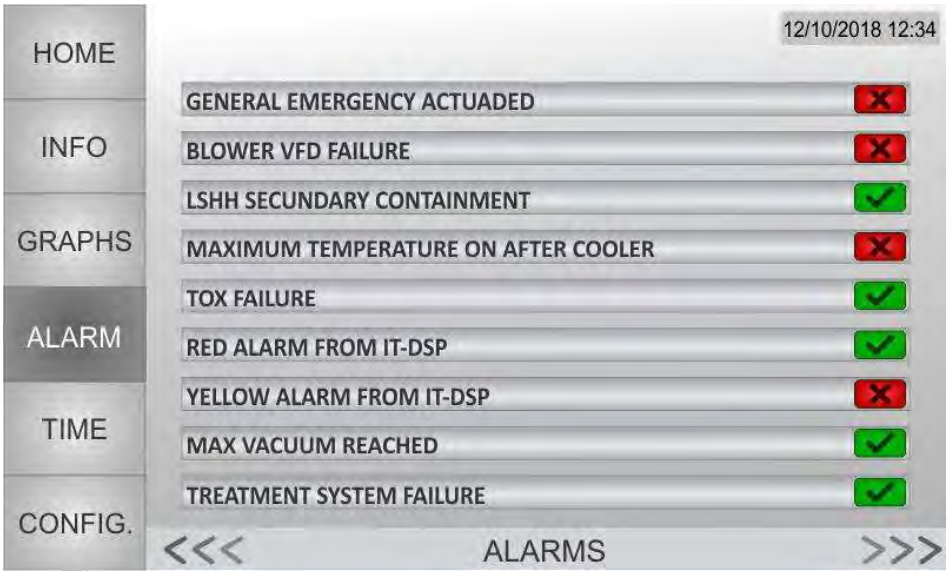

Figure 4 - Alarm Screen Example

2. On this screen, tap the RESET ALARM button, this will send a pulse to reset all alarms;

6.2.1.3.2 Resetting Using the Panel Reset Button

On the electrical panel door where the PLC is located press the blue RESET ALARMS push button to send a reset signal to the PLC.

6.2.1.3.3 Remotely Reset

Employees that have access to the Mc² project web-site will be able to send a RESET ALARMS signal that will be sent from the SEE system to the Treatment System.

6.2.1.4 Manual & Automated Control of Equipment

All equipment, including pumps, blowers, motors and actuators, can be operated manually or automatically.

In the manual control, the equipment can be turned ON and OFF without any interference of the PLC, which means that the operator has full control of the equipment.

IMPORTANT: In the manual control mode, no operation or safety interlocks are enabled. Therefore, only authorized personnel will be able to operate the system in manual mode.

In the automatic (AUTO) control mode, the PLC is responsible for the equipment control. Therefore, the operation and safety interlocks are enabled and operational.

To change between operation modes, find the equipment three state switch on the electrical panel front door and change the position as desired:

1. A – Automatic control mode enabled;
2. 0 – Manual control mode in OFF position; and,
3. M – Manual control mode in ON position.

6.2.2 Correct Atmospheric Pressure Reference

Before starting any extraction system operation, make sure all vacuum transmitters (PTs) of the system are referenced to the current atmospheric pressure. As these sensors base their measurement in absolute pressure sensing principles, to properly have the vacuum values, an atmospheric correction needs to be performed. This correction is performed according to the following procedure:

1. Make sure that both vacuum pumps are off, generating no vacuum on the system;
2. Make sure all equipment is laid in its permanent position;
3. Navigate in the PLC to the CONFIG. menu item as shown in 0;
4. Find the system vacuum transmitters configuration pages;

   NOTE: This item is password protected.

5. Notice that the value shown on the current reading is not zero;
6. In this case, touch the OFFSET green button to perform the correction according to the site location;
7. Return to the HOME item on the left MENU.

6.2.3 Air Pressure Regulation

The compressed air is generated by the air compressor. The compressor itself has an internal pressure control system that allows safe operation of the compressor which has the detailed operation described into Appendix B.

The line pressure is regulated by the pressure control valve according to the following procedure:

1. Check to see if the air compressor is on and has pressure indicated on its panel;
2. Make sure the solenoid is off by turning its HMI switch located at PLC to OFF position;
3. Pull the pressure control valve adjust cap up to unlock it;
4. At the control valve, turn the cap clockwise to increase the output pressure or counterclockwise to reduce the output pressure;
5. Once the design value is set, push the adjust cap back down to lock it in place and return the main solenoid switch back to the previous set value.

6.2.4 Chiller Operation

Please refer to chiller User manual in Appendix B for specific chiller configuration and operation procedures.

6.2.5 Cooling Tower Operation

Please refer to the cooling tower User Manual in Appendix B for specific cooling tower start-up and operation procedures.

6.2.6 Phase Separator Operation

The phase separator is designed to be able to separate DNAPL from the effluent liquid extracted. The DNAPL is collected using a pneumatic pump to transfer the DNAPL to a storage drum or tote.

6.2.6.1 DNAPL Removal

NAPL removal from within the phase separator is performed by turning on the compressed air to power the transfer pump while monitoring the transparent transfer hose. You will be able to see the transition from NAPL to water turning the transfer. When NAPL is replaced with water in the transfer hose, turn off the pump and cease the transfer.

6.3 Steam Boiler

See manual in Appendix B.

7. Operations Monitoring

Operations monitoring of the SEE system during active operations includes a number of sampling and data logging procedures, involving both automated and manual data collection. Data collection forms are presented in Appendix A.

7.1 Automated Data Collection

7.1.1 Subsurface Temperatures

Temperature data will be gathered every hour from the digiTAM™ sensors installed in the treatment volume. Data presentation on the project website will consist of:

1. Vertical temperature profiles for each digiTAM™ string;
2. Temperature history, presented as daily averages or the entire dataset, for each digiTAM™ string; and,
3. Horizontal temperature profiles at various depth intervals within the treatment volume, updated at least once per week.

7.1.2 Treatment System Monitoring

An on-site PLC can be used to view and control the treatment system. Data from the PLC will be made available in real-time to project personnel.

7.2 Manual Data Collection

7.2.1 Well field Monitoring

Extracted vapor temperature, water temperature, and applied vacuum data will be collected by the operator from the gauges installed on the MPE wells at least three times per week. In addition, extracted fluid flow rates and PID readings will be measured periodically at the wellheads. The operator will upload all well field readings to the project website and maintain the original hard copies of the data collected.

7.2.2 Water Table Elevations

Water table elevation data will be gathered on-demand from an interface probe at accessible wells in the treatment volume. Data will be presented on the project website as vertical profile of water table elevation.

7.2.3 Steam Injection

The amount of steam injected into each steam injection well will be monitored and adjusted daily by the operator. The flow readings will be recorded and will be presented graphically on the project website.

Each steam injection well will be fitted with an orifice plate flow meter. Each well will also be fitted with a temperature gauge, pressure gauge, and control valve, and pressure regulator for individual control.

7.2.4 Treatment System Monitoring

The operator will complete daily maintenance checklists for the vapor and water treatment components of the system. This includes reading fluid flow rate data from the totalizers, pitot tubes, and/or rotameters throughout the treatment system, as well as various temperature and pressure gauges along the treatment train. This data will be used to evaluate treatment system efficiency and identify any maintenance activities that may be required. The operator will upload all treatment equipment readings to the project website and maintain the original hard copies of the data collected. Data uploaded to the website is automatically presented in a live process flow diagram: when hovering over a particular component with a mouse, recent data associated with that component is plotted graphically for presentation.

Automated level sensors are also present throughout the system, which inform the run state of the system and can trigger shutdown alarms automatically. System alarm conditions are presented on the project website, and automated callouts are sent to the email and cellular numbers of relevant project personnel in the event of an upset condition.

7.2.5 Performance Sampling

During active operations, vapor and liquid analytical samples will be collected periodically by the operator at specific locations along the treatment train. In addition, PID readings will be taken daily at specific locations along the vapor treatment train and calibrated to the analytical vapor samples. These data will be used for the quantification of COC mass removal, carbon and/or permanganate bed loading, and discharge compliance throughout operations. At the end of operations, confirmation soil and/or groundwater sampling will be performed by others.

8. Maintenance and Troubleshooting

8.1 DigiTAM™ Sensors

DigiTAM™ sensors are deployed in harsh temperature and chemical environments. As a result, it is possible for sensors to malfunction over the course of an active thermal application. The following procedure is used to troubleshoot a malfunctioning sensor:

1. Ensure the network communication is functional;
    a. Verify internet protocol address and perform a ping check;
    b. Power cycle the network communication components; and,
    c. Reset or repair the network devices as needed.
2. Verify the switching function of the data channel inside the data acquisition box by observing the associated LED indicators. The sensor may be moved to a spare channel if the current channel is malfunctioning;
3. Test communication with the sensor string using a laptop with a sensor reader; and,
4. Remove the sensor from the well to inspect for damage and repair or replace as necessary. The operator must be aware of the appropriate precautions required to mitigate possible thermal and chemical hazards while performing this task.

8.2 Extraction System

If extraction rates change or mass removal rates decrease substantially over a short period of time, it may suggest that there is an undesirable condition within the extraction system. If the following conditions are detected within the extraction system, corrective action may be required:

1. Decreased Vapor Extraction – if a rapid decrease in the rate of vapor extraction is observed, or a loss of pneumatic containment is detected, it may indicate scaling, biofouling, or blockage within the extraction fittings, tubing, or piping components. Potentially affected components should be assessed and repaired or replaced, if required. If there is a large percentage of condensables (e.g., steam, VOCs) in the extracted vapor, and the vapor extraction tubing connection between the well head and multiphase piping is sagging, condensate may be blocking the line, which will need to be cleared. Undesirable upwelling of the water table may also be occurring, which can be corrected by adjusting the applied vacuum at the well head.
2. Decreased Liquid Extraction – if a rapid decrease in the rate of liquid extraction is observed, or a loss of hydraulic containment is detected, it may indicate scaling, biofouling, or blockage within the extraction fittings, tubing, or piping components. A pump failure or issue with the compressed air supply system may have also

occurred. Potentially affected components should be assessed and repaired or replaced, if required.

3. Over-extraction – if the overall rate of liquid extraction exceeds the design criterion, a high-high alarm occurs at the inlet of the treatment system, or a local decrease in subsurface temperature is observed, it may indicate an over-extraction condition within a particular zone of the well field. Over-extraction can be undesirable because groundwater, having a large heat capacity, can represent a large sink term in the energy balance when extracted from the subsurface, potentially affecting temperature performance. In such a scenario, individual rates of water extraction should be adjusted to correct the condition and match the design criteria for the site.
4. Upwelling – if a shallow water table is encountered, and a sufficient level of vacuum is applied, it is possible that the water table upwelling can cause the rate of vapor extraction to decrease. However, attempting to correct the condition with increased liquid extraction may affect temperature performance. Consequently, the condition must be corrected by adjusting the applied vacuum at the well head, while continuing to evaluate pneumatic capture in the surrounding areas. Additional subsurface capture points or barrier components may be required in this scenario.

8.3 Treatment System

The treatment system is equipped with various types of instrumentation to indicate the general performance of the individual components within the system, as well as various level sensors to automatically trigger components and indicate upset conditions within the system. Interlocks between the treatment and steam injection systems are discussed in Section 2.3.11. If the following conditions are detected within the extraction system, corrective action may be required:

1. High-Level Condition – If a high-level condition is detected, it may indicate (i) scaling, biofouling, or blockage within the treatment system fittings, tubing, or piping, (ii) an overextraction condition, (iii) a pump cutout or failure, (iv) an issue with the level switch, or (v) an issue in the relay logic. Any associated components must be inspected and cleaned, repaired, or replaced, as required.
2. Low-Level Condition – If a low-level condition is detected, it may indicate (i) a leaking condition, (ii) a pump shutoff issue, (iii) an issue with the level switch, or (iv) an issue in the relay logic. Any associated components must be inspected and cleaned, repaired, or replaced, as required.
3. Fouling or Scaling – If fouling or scaling is detected within the treatment system, it can reduce the treatment efficacy of numerous components within the system. In such a scenario, biocide, biodispersant, and/or sequestering agents can be employed to address biofouling and/or scaling within the system. Note that chlorine-based biocides may attack stainless steel

components within the treatment system, and instead, amendments such as glutaraldehyde are preferable.

4. Emulsions – In multiphase extraction applications with slurper tubes and combined piping streams, it is possible to experience shearing and mixing of groundwater, NAPLs, and air, which can cause emulsions to form and reduce the efficacy of subsequent phase separation processes. To address this phenomenon, amendments such as demulsifiers, organically activated clay media, porous or fibrous coalescing media, centrifugal extractors, or membrane separation can be employed.
5. Unanticipated Constituents – occasionally, thermal systems can remove appreciable quantities of constituents from the subsurface that were not anticipated to be present or driving the removal action at the site. Nevertheless, these constituents must be treated to maintain discharge compliance. Onsite operators must be quick to communicate any such observations to project engineers, and be ready to implement any changes necessary to ensure effective treatment. Similarly, the composition of the vapor and liquid streams is often dynamic over the course of a thermal application, which must be taken into account as the project progresses.

8.4 General Maintenance Schedule

A general maintenance schedule is provided in Table 1. See Appendix B for detailed maintenance information.

Table 1 – General Maintenance Schedule

Equipment	Function	Action	Period	Notes
Hoses & Connections	Tranfer the fluids and vapors throughout the system	A daily site walk must be made to realize a visual inspection in all hoses and fittings.	Daily	The weather conditions must be verified before inspection to avoid storms or situations that could put the onsite personell in harm situations
Vaccum pump	Maintain the vapor extraction rate of the system	Daily check oil level and filter and oil change	Daily check and change every 5000hr of operation	If filter differential pressure is greater than 20inWC the filter element should be replaced.
Cooling tower	Provide coolant fluids to the second stage off the cooling process.	General Maintenance	As needed based on weekly visual inspection	Refer to equipment manual for maintenance and oerability procedures
Chiller	Provide coolant fluids to the third stage off the cooling process.	General Maintenance	As needed based on weekly visual inspection	Refer to equipment manual for maintenance and operability procedures

Phase separator	Separate DNAPL from the liquid stream	Cleaning procedures	As needed based on weekly visual inspection	Make sure the inlet pump and lines are off and closed and the drain lines are open for proper drainage.
Air Filter	Filter the particules of the vapor stream to protect the vaccum pump rotor	Replacement of the filter	Daily checkup and change as needed	Make sure the vacuum pump is off and properly before replacing the filter.
Air Compressor	Generate air compressor supply to the whole system	This action refers to the periodic maintenance of Compressed Air.	Weekly checkup, every 1000hrs of operation change the oil filter and every 5000hrs change the oil	Refer to equipment manual for maintenance and oerability procedures
VGAC Filters	Filter the vapor stream	Change carbon	When the outlet PID reading is greater than design standart	Make sure the desired gas filter is not operational
LGAC filter	Filter solved contamination molecules in the liquid stream	Change carbon	When the lab analysis indicate the carbon is saturated	Make sure the desired liquid filter is not operational
Bag Filters	Filter the solid particles to prevent clogging of the air stripper.	This action refers to replacement of filter element inside Bag Filter.	Everytime that the differential Pressure is higher than 2.00 bar.	Make sure that the inlet and outlet valves is closed and blocked.

9. Final Shutdown

9.1 Final SEE Shutdown

Final SEE shutdown is performed at the direction of the client, after all operational data is assessed and consensus with the applicable regulatory body is obtained. The final SEE shutdown procedure consists of the following tasks:

1. Ramp the steam boiler down per the shutdown procedures in the manual provided in Appendix B;
2. Fully open the steam injection wells to allow the system pressures to equalize with the subsurface;

Any further activities performed onsite must be conducted with continuing awareness of the potential thermal and chemical hazards present. The MPE system will continue to operate as part of the active cooldown period. Remote boxes may remain active to perform temperature measurements as part of the active cooldown period. The final extraction and treatment system shutdown procedure consists of the following tasks:

1. Disengage the compressed air assist to the slurper tubes or the pneumatic pumps, and subsequently close the liquid extraction lines at each individual well head.
2. Drain the liquids in the well field piping from each well head, to the lateral piping, to the main piping, and finally into the treatment system. Continue to apply vacuum at the blower.
3. Discharge any treated liquids to sewer, and drain any untreated liquids within the treatment system back to the knockout tank.
4. Turn off the applied vacuum at the blower and ensure that there are no fugitive emissions from the treatment system.
5. Following LOTO procedures, disengage all breakers within the treatment system control panel, and then disengage breakers for the treatment system in the main distribution panel.

10. References

1. Mc², January 2022, “Remedial Design Report, Roxana Site, Roxana, Il”, Document number: AEC-ROX-ENG-RemedialDesignReport-001-REV.C3. McMillan-McGee Corporation, Calgary, AB, Canada.
2. Mc², October 2022, “Health and Safety Plan, Roxana Site, Roxana, Il”, Document number: AEC-ROX-ENG-HASP-001-REV-B1. McMillan-McGee Corporation, Calgary, AB, Canada.

Appendix A – Sample Forms for SEE Operations

1. Well Field Readings Checklist (Sample Only)
2. Treatment Equipment Checklist (Sample Only)
3. Ground Water Pump Timing Sheet (Sample Only)

Note: These checklists are to be updated at the time of construction to ensure consistency with instrument labeling.

McMillan-McGee Corp.
Extraction Well Readings
Project: Roxana - Area A
Date/Time: _____
Technician: _____
Signature: _____



Well	Temp [°C]	Vac [in Hg]	PID [ppm]	Dwyer [in WC]	Pump Flow [Y/N]	Comments
X-AA2						
X-AB1						
X-AB4						
X-AC3						
X-AC5						
X-AD2						
X-AD5						
X-AE4						
X-AF3						
X-AF4						
X-AF6						
X-AG5						
X-AG7						
X-AH5						
X-AH7						
X-AI6						
X-AJ8						

McMillan-McGee Corp.
Extraction Well Readings
Project: Roxana - Area B
Date/Time:
Technician:
Signature:

Well	Temp [°C]	Vac [in Hg]	PID [ppm]	Dwyer [in WC]	Pump Flow [Y/N]	Comments
X-BB2						
X-BB3						
X-BC1						
X-BC2						
X-BC3						
X-BD1						
X-BD2						
X-BD3						
X-BE1						
X-BE2						
X-BE3						
X-BF1						
X-BF2						
X-BF3						
X-BG1						
X-BG2						
X-BG3						
X-BH2						
X-BH3						

McMillan-McGee Corp.
Steam Well Readings
Project: Roxana - Area A
Date/Time:
Technician:
Signature:

Well	P Up [psi]	P Down [psi]	DP [psi]	Temp [°C]	Comments
SI-AA1					
SI-AA2					
SI-AA3					
SI-AB1					
SI-AB2					
SI-AB3					
SI-AB4					
SI-AC1					
SI-AC2					
SI-AC3					
SI-AC4					
SI-AC5					
SI-AD1					
SI-AD2					
SI-AD3					
SI-AD4					
SI-AD5					
SI-AD6					
SI-AE1					
SI-AE2					
SI-AE3					
SI-AE4					
SI-AE5					
SI-AE6					
SI-AF2					
SI-AF3					
SI-AF4					
SI-AF5					
SI-AF6					
SI-AG3					
SI-AG4					

McMillan-McGee Corp.
Steam Well Readings
Project: Roxana - Area A
Date/Time:
Technician:
Signature:

Well	P Up [psi]	P Down [psi]	DP [psi]	Temp [°C]	Comments
SI-AG5					
SI-AG6					
SI-AG7					
SI-AH4					
SI-AH5					
SI-AH6					
SI-AH7					
SI-AH8					
SI-AI5					
SI-AI6					
SI-AI7					
SI-AI8					
SI-AJ6					
SI-AJ7					
SI-AJ8					
SI-AK7					
SI-AK8					

McMillan-McGee Corp.
Steam Well Readings
Project: Roxana - Area B
Date/Time: _____
Technician: _____
Signature: _____

Well	P Up [psi]	P Down [psi]	DP [psi]	Temp [°C]	Comments
SI-BA1					
SI-BA2					
SI-BA3					
SI-BB1					
SI-BB2					
SI-BB3					
SI-BB4					
SI-BC1					
SI-BC2					
SI-BC3					
SI-BC4					
SI-BD1					
SI-BD2					
SI-BD3					
SI-BD4					
SI-BE1					
SI-BE2					
SI-BE3					
SI-BE4					
SI-BF1					
SI-BF2					
SI-BF3					
SI-BF4					
SI-BG1					
SI-BG2					
SI-BG3					
SI-BG4					
SI-BH1					
SI-BH2					
SI-BH3					
SI-BH4					
SI-BI3					
SI-BI4					

Roxana, Il

Date/Time ___/___/___ : ___ (24hr clock) Ambient temperature _____ °F

OPERATOR _____ Precipitation _____

PLC Hour Meters ___ : ___ Green ___ : ___ Yellow Hrs : Mins

Initial Vapor Treatment				**Normal Ranges**
VI-90	KO-90 Vacuum		in Hg	
TI-89	KO-90 Inlet Temperature		°F	
TI-90	KO-90 Outlet Temperature		°F	
SP-90	Initial PID Reading		PPMv	
TI-101	Vapor Temperature Downstream HE-101		°F	
TI-100	KO-100 Temperature Downstream HE-102		°F	
VI-100	KO-100 Vacuum		in Hg	
TI-103	KO-103 Temperature Downstream HE-140A/B		°F	(50F-65F)
VI-103	KO-103 Vacuum		in Hg	
Main Vacuum Blower B-104				
B-104	Main Blower Operational Running		RPM/Amps	
VI-104	B-104 Process Vacuum			
TI-104	B-104 Outlet Temp		°F	
V-801	B-104 Dilution Valve Open/Closed		% open	(0 - 10%)
FE-104	Dilution Air Flow Rate (Reading "WC)		In WC/ convert to SCFM	
TI-120	Vapor Temperature Downstream HE-120		°F Outlet	80F-100F
SP-120	PID Reading Pre Air Stripper Confluence		PPMv	
SP-120A	PID Reading Post Air Stripper Confluence		PPMv	
Air Stripper AS-204A/B				
FE-120	Process Airflow from Well Field		in WC	
TI-108	Air Stripper Air Flow Stream Temp		°F	
FE-204A	AS-204A Air Flow		in WC	
FE-204B	AS-204B Air Flow		°F	
Regenerative Carbon Treatment System				
TI-106	Combined Effluent Temperature IN		°F	
VGAC	Absorbing Bed	Initial _____ Ending _____	LEFT/RIGHT	
VGAC	Absorption time	_____ Left / Right	minutes	
Regen	INITIATE steam Time	_____ : _____	_____ steam duration, only if steamed TODAY (minutes)	
Steam	breakthrough time		_____ Minutes	25 minutes+-
VGAC Vessels				
SP-405	Carbon Regen Vapor Effluent		PPMv	
SP-150	VGAC-150 Effluent PID Reading		PPMv	
PI-150	VGAC-150 Outlet Pressure		in WC	
SP-151	VGAC-151 Effluent PID Reading		PPMv	
PI-151	VGAC-151 Outlet Pressure		in WC	
SP-154	VGAC-154 Effluent PID Reading		PPMv	OFF LINE
PI-154	VGAC-154 Outlet Pressure		in WC	OFF LINE
KMNO4 Vessels				
PI-152	KMNO4-152 Effluent PID Reading		PPMv	
SP-152	KMNO4-152 Outlet Pressure		in WC	
PI-153	KMNO4-153 Effluent PID Reading		PPMv	
SP-153	KMNO4-153 Outlet Pressure		in WC	
SP-155	KMNO4-155 Effluent PID Reading		PPMv	OFF LINE
PI-155	KMNO4-155 Outlet Pressure		in WC	OFF LINE
Exit Pipe				
FE-156	Flow meter reading Exit Pipe		in WC	
TI-156	Air flow temperature reading Exit Pipe		°F	
SP-156	Exit Pipe PID Reading		PPMv	

	Roxana, Il

Date/Time / / : (if different than vapor readings) **OPERATOR**

		Readings		
Totalizer Readings				
FE-201	Discharge T-190 & T-191		Gallons	
FE-245	KO-100 & KO-103 Condensate		Gallons	
FE-205	Air Stripper Discharge		Gallons	
FE-215	MC2 Injection Water		Gallons	
FE-230	Discharge Water		Gallons	
FE-300	Municipal Water		Gallons	
FE-350	Steam Generator Blow Down Water		Gallons	
FE-240	Steam Generator		Gallons	
FE-301	Cooling Tower Blow Down Water		Gallons	
FE-440	Air Compressor Condensate		Gallons	
LT-219	NAPL Holding volume		inches	Measure after Regen
Knock Out & De-emulsifying Transfer Pump Pressures				**Normal Ranges**
PI-212	KO-90 Pump Pressure		psig	(15-50 psi)
TI-212	KO-90 Effluent Temperature		°F	
PI-201	T-190/T-191 De-emulsifying Tank Pump Pressure		psig	(15-50 psi)
PI-213	KO-100 Pump Pressure (initiate)		psig	(15-50 psi)
PI-214	KO-103 Pump Pressure (initiate)		psig	(15-50 psi)
PI-217	KO-109 Pump Pressure		psig	(15-50 psi)
PI-409	KO-106 Pump Pressure		psig	(15-50 psi)
PI-208	T-206 P-208 Transfer Pump Pressure		psig	(15-50 psi)
ET-DSP™ Injection				
PI-215	P-215 Pump Pressure		psig	40 psi
TI-215	ET-DSP Injection/Discharge Water Temperature		°F	
Oil Water Separator T-200				
TI-200	Oil Water Separator Temp		°F	***Note: Do not open if above 140F***
PI-202	Oil Water Separator T-200 Pump Pressure		psig	(15-50 psi)
Bag Filters				
PI-269	BF-269 Effluent Pressure (Compare to PI-202)		psig	(15-50 psi)
PI-275	BF-275 Effluent Pressure (Compare to PI-269)		psig	(15-50 psi)
TI-204A	Organic Clay Filter Effluent Temperature		psig	(15-50 psi)
Air Stripper AS-204				
PI-205A	Air Stripper 205A Pump Pressure		psig	(15-50 psi)
PI-205B	Air Stripper 205B Pump Pressure		psig	(15-50 psi)
T-204B	Air Stripper Effluent Temperature		psig	(15-50 psi)
Liquid Carbon				
LGAC-220	Regeneration	YES / NO		
LGAC-221	Regeneration	YES / NO		
PI-220	Back Pressure LGAC-220		psig	
PI-221	Back Pressure LGAC-221		psig	
PI-222	LGAC-221 Effluent Pressure		psig	
Cartridge Filters				
PI-285	CF-285 Effluent Pressure (Compare to PI-222)		psig	
PI-286	CF-286 Effluent Pressure (Compare to PI-222)		psig	
Cooling System				
TI-311	Chiller Manifold Temperature In From Process		°F	(45-50F)
TI-310	CT-310A Temperature Out To Process		°F	(45-50F)
TI-313	CT-310B Temperature Out To Process		°F	(45-50F)
CT-310A	Chiller Fans Operating	0 / 1 / 2	Circle	
PI-312	Chiller CT-310A Water Transfer Pump Pressure (P-312)		psig	20-25 psig
CT-310B	Chiller Fans Operating	0 / 1 / 2	Circle	
PI-314	CT-310B Chiller Water Transfer Pump Pressure (P-314)		psig	20-25 psig
CT-300	Cooling Tower Fan Operation (See VFD Panel)	Y / N		
TI-300	Cooling Tower Basin Water Temperature			
TI-301	Cooling Tower Supply Water Temperature			
TI-302	Cooling Tower Return Water Temperature			
PI-301A	P-301A Pump Pressure (Water from CT-300)		psig	
PI-301B	P-301B Pump Pressure (Water from CT-300)		psig	
WS-299	Water Softener Salt in Tank		% full	
Compressed Air System AC-400				
PI-404	Well Field Pressure		psig	10 psi
FE-404	Well Field Air Flow Meter		SCFM	
PI-401	AC-400 Receiver Pressure		psig	
PI-402	AC-400 Pressure Outlet to Regen		psig	
Electric System				
	GFCI OUTLET CHECK (End Of Each Day)		Checked	(CHECK ALL GFCI & Heat Trace)

Notes

DIRECTIONS:

Push **OK** twice
scroll down to **PARAMETERS**
OK
Scroll down to desired Timer number
Use **OK** and arrows to adjust times
NOTE: times are in units of Minutes and Seconds
NOTE: top off time = I1, bottom on time = I2
OK to confirm settings
ESC to back out to main menu

BLUETOOTH CONNECTION DIRECTIONS:

Download App: **EATON easyRemote Diplay**
Turn on your phone's Bluetooth and link to EACH BOX
using the device numbers and codes above
Open App
Find Devices
Select and adjust timers

WIRING MATRIX Chemical WELLS

BOX #1								
KNOB	WELL #	TIMER	ON (I2)	OFF (I1)	WIRE No.	TERMINAL	Description	COLOR
1	GWP	T15	0:10	2:00		Q1		
2	Slurper	T16	0:30	0:30		Q2		
3		T17				Q3		
4		T18				Q4		
5		T19				Q5		
6		T20				Q6		
7		T21				S1		
8		T22				S2		
9		T23				S3		
10		T24				S4		
11		T25				S5		
12		T26				S6		

Appendix B – Technical Documentation

Operations Manuals and Specification Sheets:

1. Steam Boiler
2. Air Compressor
3. Vacuum Blower
4. Chiller
5. Cooling Towers
6. Pumps
7. Generator

SUPERIOR BOILER

BUILT TO OUTPERFORM



DAKOTA

2-PASS DRYBACK BOILER

Designed for Maximum Efficiency, Reliability
and Durability for Today's Most Demanding Environments.

INSTALLATION AND MAINTENANCE MANUAL

RENTAL TRAILER BOILER

KANSAS CITY, MO

Sales Order Number: 21090357
National Board Number: 19560

3524 East 4th Avenue
Hutchinson, KS 67501

(620) 662-6693
1-800-444-6693

sales@superiorboiler.com
www.superiorboiler.com

Table of Contents

Warranties and Specifications…… I

Standard Warranty I.1
Boiler Specification Sheets I.2

Certifications and Applicable Test Reports…….……...…… II

A.S.M.E. P-2, P-6, P-7 Data Reports II.1

Engineering…… III

Boiler R&D Drawing III.1
Boiler Wiring Diagram III.2
Burner Wiring Diagram III.3

Superior Boiler Supporting Documents…… IV

Recommended Spare Parts IV.1
Boiler Installation Instructions IV.2
Prestart-Up Inspection IV.7
Operation and Maintenance IV.8
Boil-Out of a New Unit IV.10
Maintenance Schedule IV.12
Maintenance Log Cover Sheet IV.14
Maintenance Log IV.15
Boiler Blowdown Procedure IV.19
Boiler Water Treatment IV.21
ABMA Water Quality Recommendations IV.24
Maintenance and Care Recommendations IV.25
Boiler Lay-Up Procedure IV.29
Modulating Control Adjustment Procedure IV.32
Stack Velocity Estimate Procedure IV.34
Shutdown and Cool-Down Procedure IV.36
Care of Idle Boilers IV.37
Extended Outdoor Storage IV.38
Cold Boiler Startup and Operation IV.39

Table of Contents Continued

Parts Supplied by Superior Boiler Works, Inc…… V
Gaskets……...
Topog-E Gaskets
- Installation in Steam Boilers V.1

Sensors & Controls……
McDonnell & Miller
- Series 194 Low Water Cut-Off V.5
- Instruction Manual V.6

Gems Sensors & Controls
- Warrick Series 26NM Control Installation and Operation V.18
- Series 3C Fittings and Probes V.20

Worcester
- Series 44 Ball Valve V.22
- Installation & Operation V.23

Honeywell
- L404 Series Controller V.30
- Installation & Operation V.31
- Series M9174 V.37
- L4079 Series Controller V.41
- Installation & Operation V.42
- L91 Controller V.45

Gauges and Thermometers…...……...
Ashcroft
- EI Series Bimetal Thermometers V.55
- Installation and Maintenance Instructions V.56
- Type 1379 Pressure Gauge V.59
- Installation and Maintenance Instructions V.60
- Ashcroft Manual V.61

Table of Contents Continued

Sensors, Controls & Valves……

Apollo
- 70-100 Series Ball Valve V.79

Safety and Relief Products
- Kunkle Series 6000 Safety Valve V.80
- Installation and Operating Instructions V.81

Powell
- 602 Gate Valve V.91
- 602 Swing Check Valve V.95
- 602 Globe Valve V.99
- 600 Gate Valve V.103
- Handbook of Powell Valves V.106

United Brass
- Model 364 Continuous Blow-Down Valve V.134
- Model 425 Quick Opening Valve V.135
- Model 226UT "Y" Blow-Down V.136

Steamco
- Non Return Valve V.137

3524 East 4th Avenue Hutchinson, KS 67501
PH: (620) 662-6693
FAX: (620) 662-7586
www.superiorboiler.com

LIMITED WARRANTY

Superior warrants all equipment manufactured by it and bearing its nameplate to be free from defects in workmanship and material, under normal use and service within one year from the date the equipment is first placed in use for any purpose, temporary or otherwise, or eighteen (18) months from the date of shipment, whichever shall be less. Except where a different expressed written warranty has been issued, no warranty of any kind, express or implied, is extended by Superior to any person or persons other than its direct buyer.

Superior shall have no responsibility for the performance of any product sold by it under conditions varying materially from those under which such product is usually tested under existing industry standards, nor for any damage to the product from abrasion, erosion, corrosion, deterioration or the like due to abnormal temperatures or the influences of foreign matter or energy, nor for the design or operation of any system of which any such product may be made a part or for the suitability of any such product for any particular application. Superior shall not be liable for any cost or expense, including without limitation, labor expense, in connection with the removal or replacement of alleged defective equipment or any part or portion thereof, nor for incidental or consequential damages of any kind. Any substitution of parts not of Superior's manufacture or not authorized by Superior, or any modification, tampering, or manipulation of Superior's product shall void any and all warranties. Alteration of any parts without express written permission of Superior for a purpose other than that intended shall void any and all warranties. Under no circumstances shall Superior's liability exceed the amount paid to Superior for the original equipment.

It is the owner's responsibility to operate the boiler safely and to follow procedures to ensure proper care and maintenance as per the operations and maintenance manual. This warranty is contingent upon proper evidence that the installation is recorded at the factory; is consistent with Manufacturer's design, operation and maintenance recommendations and meets local codes.

The foregoing warranties shall not apply to products or parts not manufactured by Superior.

THIS LIMITED WARRANTY IS GOVERNED BY AND CONSTRUED UNDER THE LAWS OF THE STATE, COUNTRY, JURISDICTION, OR PROVINCE IN WHICH THE PRODUCT WAS ORIGINALLY PURCHASED. THE LIMITED WARRANTY TERMS CONTAINED IN THIS STATEMENT, EXCEPT TO THE EXTENT LAWFULLY PERMITTED, DO NOT EXCLUDE, RESTRICT, OR MODIFY BUT ARE IN ADDITION TO THE MANDATORY STATUTORY RIGHTS APPLICABLE TO THE SALE OF THIS PRODUCT TO THE PURCHASER. OUTSIDE THE UNITED STATES AND TO THE EXTENT SUCH WARRANTIES, TERMS AND CONDITIONS CANNOT BE DISCLAIMED AND ARE PERMITTED BY APPLICABLE LAW, SUPERIOR LIMITS THE DURATION AND REMEDIES OF SUCH WARRANTIES AND CONDITIONS TO EIGHTEEN (18) MONTHS OF SHIPMENT FROM THE FACTORY OR TWELVE (12) MONTHS FROM STARTUP, WHICHEVER COMES FIRST. THIS LIMITED WARRANTY GIVES THE PURCHASER SPECIFIC LEGAL RIGHTS, AND THE PURCHASER MAY HAVE OTHER LEGAL RIGHTS, WHICH MAY VARY BY STATE, COUNTRY, JURISDICTION, OR PROVINCE.

There are no express or implied warranties which extend beyond those contained herein.

NOTE: All new boilers must be boiled out or Superior Boiler will void the warranty.

NOTE: WARRANTY VALIDATION: Field start-up report must be completed, dated, signed, and returned within 15 days of field start-up to Superior Boiler ATTN: Sales Department to validate warranty.

SUPERIOR BOILER

J.O. NO. 21090357
SPEC SHEET - STEAM PAGE 1 OF 3
S.O. NO. 21090357 NAT.BOARD NO. 19560
DATE RECEIVED: 10/9/20 QTY: 1
STATUS: WA&R [ ] RELEASED [X] DATE 10/9/20

"FINAL"

SUBMITTALS REQ'D: 1 SETS PROPOSAL 21A90357
R&D SHEET [X] W.D. [X] SUBMITTAL NO.
BURNER [X] GAS PIPING [X] OIL PIPING [X]
DATE REQ'D: MANUALS REQ'D: 2
REP CONTACT: JASON HEMPHILL (314) 865-3000 EXT: 104
jason@abmstl.com

JOB: RENTAL TRAILER BOILER
LOCATION:
SOLD TO: KC BOILER EQUIPMENT
111 WEST 10TH STREET
KANSAS CITY, MO 63105

MODEL: 11-X-2000-S200-PFCF-GA2
NOMINAL HP 650 OUTPUT 21759 MBH
SECTION I
DESIGN PRESSURE 200 PSI STEAM
OPERATING PRESSURE 175 PSI STEAM
NAMEPLATE: SUPERIOR PAINT BLUE
STACK DAMPER: [X] W/LOCKING QUAD [X] W/BEARINGS [ ]
STACK THERMOMETER ASHCROFT 50EI60E120 [L]
DIAL 5.00" STEM 12.00" RANGE 100/800 ºF
BOILER J-BOX [ ] N/S LS [ ] RS [ ]
GAUGE GLASS [X] TRI-COCKS [X] CHAIN OPERATED [ ]

PRIMARY L.W.C.O. LS [ ] RS [X] TOP [ ]
MODEL MM 194-7B w/ SHUNT PUSHBUTTON [M]
WATER COLUMN BLOWDOWN VALVE(S); [M]
[2] APOLLO FIG. NO. 70-145-64 SIZE 1.00"
AUX. L.W.C.O LS [X] RS [ ] TOP [ ]
MODEL 26NMB1A0A / 3C1B w/ SHUNT PUSHBUTTON [M]
HIGH WATER LS [ ] RS [ ] TOP [ ]
CUTOFF [ ] ALARM [ ]
MODEL N/S [ ]

[1] OPERATOR L404F 1094 RANGE 20-300 [M]
[1] LIMIT L4079B 1066 RANGE 20-300 [M]
[1] FIRING RATE L91B 1241 RANGE 10-300 [M]
[ ] RANGE [ ]
STEAM GAUGE: W/GAUGE/TEST COCK [X]
ASHCROFT FIG. NO. 1379AS [L]
DIAL 8.5" RANGE 0-300# PSI W/SYPHON [X]

TURBULATORS: [ ] N/S TYPE

SAFETY VALVE(S): KUNKLE [L]
[1] 6021JH SIZE 2.00" X 2.50" SET @ 200 PSIG
[1] 6021HG SIZE 1.50" X 2.00" SET @ 200 PSIG

FEEDWATER VALVE(S): LS [ ] RS [X] [M]
GATE: POWELL FIG. NO. GA08TA58GB SIZE 2.00"
CHECK: POWELL FIG. NO. SW08TA58GB SIZE 2.00"
****
FEEDWATER CONTROL: ON-OFF ELECT.MOD. X
PNEUMATIC MOD. ATO ATC
LEVEL CONTROLLER INTEGRAL TO LWCO [M]

VALVE MAKE WORCESTER 4446PMSE w/ SIZE 1.25"
HONEYWELL M9174
3-VALVE BY-PASS: [P]
[2] GATE POWELL FIG. NO. GA08TA58GB SIZE 2.00"
[1] GLOBE POWELL FIG. NO. GL08TA58GB SIZE 2.00"
****
CHEMICAL FEED VALVES: LS [ ] RS [ ] [ ]
[ ] N/S FIG. NO. SIZE
[ ] N/S FIG. NO. SIZE
CHEMICAL FEED CONNECTION WITH DIFFUSER [ ]

SURFACE BLOWDOWN VALVE(S): LS [X] RS [ ] [M]
METERING UNITED BRASS 364 SIZE .50"
STOP POWELL FIG. NO. GA08TA58GB SIZE 1.00"
FULL LENGTH SKIMMER [X] PERFORATED

BOTTOM BLOWOFF VALVE(S): LS [X] RS [ ] [M]
[2] UNITED BRASS FIG. NO. 425 SIZE 1.50"
[1] UNITED BRASS FIG. NO. 226UT SIZE 1.50"

COMPLETED BY: DATE
SALES: JB 10/12/20
ENG.: MM 11/4/20
SALES PERSON: JACOB

BOILER TO MEET THE FOLLOWING CODES:
UL LABEL [ ] [ ]
LOW-FIRE ELECTRICAL TEST ONLY [X] FULL FIRETEST [ ]
[M] SHIPPED MOUNTED [N/A] NOT APPLICABLE
[L] SHIPPED LOOSE [N/S] NOT SUPPLIED
[P] PREPIPED/SHIPPED LOOSE [CF] CUSTOMER FURNISHED

REVISIONS

REV.	DATE	BY

SUPERIOR BOILER

J.O. NO. 21090357

SPEC SHEET PAGE 2 OF 3

S.O. NO. 21090357 BURNER S/N

EQUIPMENT PURCHASED BY OTHERS FOR MOUNTING BY SUPERIOR BOILER

BURNER MFG. POWER FLAME MODEL CM10B-GO-30

FUELS: GAS TYPE NATURAL OIL: # 2 AIR ATOMIZING [X] PRESSURE ATOMIZING [ ]

FIRING RATE: GAS 27300 CFH OF 1000 BTU/CF 195 GPH OF 140000 BTU/GAL

BURNER OPERATION: FULL MODULATION [X] OTHER

AVAILABLE GAS PRESSURE 5 PSIG VOLTAGE: 480 VOLT 60 HZ 3 PH

CODES: UL X CSD-1 X IRI FM NFPA 85 OTHER

GAS TRAIN: SIZE 3" MOUNTED LS X RS

CONTROL PANEL: MOUNTED X LS RS

BOILER SKID BURNER X REMOTE

FGR PIPING LS RS NOx

BLOWER MOTOR 15 HP ODP [ ] TEFC [ ] HI EFF [X]

FLAME SAFEGUARD RM7840L

OIL SIDE:

CIRCULATING OIL PUMP : L RS X [M]

PRESSURE ATOMIZING OIL PUMP: SKID MOUNTED [ ] LS RS

AIR COMPRESSOR: LS RS X [M]

SPECIAL INSTRUCTIONS:

SB WILL MOUNT CUSTOMER FURNISHED BURNER BUT
WIRING WILL BE HANDLED IN FIELD BY OTHERS.

MOUNT OIL PUMP AND AIR COMPRESSOR IN CONTAINER
ON STREET SIDE OF THE CONTAINER

SUPERIOR BOILER

J.O. NO. 21090357

SPEC SHEET - SPECIAL INSTRUCTIONS

S.O. NO. 21090357

SPECIAL INSTRUCTIONS:

UNIT TO HAVE:

WN RF SPOOL, 300#, 8" X 5" (INCLUDE STUDS, NUTS AND GASKET FOR LARGE END)

WN RF SPOOL, 300#, 5" X 5" w/ .50" DRAIN VALVE (INCLUDE STUDS, NUTS AND GASKET FOR ONE END)

FLANGED STACK CONNECTION

SET BOILER INTO CUSTOMER SUPPLIED TRAILER

ANGLE NON-RETURN VALVE, STEAMCO 250ANR, 5"

GATE VALVE, POWELL 3003FC8G, 5"

NOTE: IF PARTS ARE REMOVED FOR SHIPPED LOOSE PURPOSES, SB TO PROVIDE MATCH MARK TAGS.

UNIT TO SHIP WITH SO# 21070275

21090357
Sales Order #

FORM P-2 MANUFACTURER'S DATA REPORT FOR ALL TYPES OF BOILERS EXCEPT WATERTUBE AND ELECTRIC

As Required by the Provisions of the ASME Code Rules, Section I

1. Manufactured by Superior Boiler Works, Inc., 3501-24 East 4th Avenue, Hutchinson, Kansas, 67501
(Name and address of manufacturer)

2. Manufactured for KC BOILER EQUIPMENT, 111 WEST 10th STREET, KANSAS CITY, Missouri, 63105
(Name and address of purchaser)

3. Location of Installation KC BOILER EQUIPMENT, 111 WEST 10th STREET, KANSAS CITY, Missouri, 63105
(Name and address)

4. Type SCOTCH MARINE (HRT, etc.) Boiler No. 19560 (Mfr's. Serial No.) N/A (CRN) 21090357D REV A (Drawing No.) 19560 (Nat'l Board No.) Year Built 2020

5. The chemical and physical properties of all parts meet the requirements of material specifications of the ASME BOILER AND PRESSURE VESSEL CODE. The design conforms to Section I of the ASME BOILER AND PRESSURE VESSEL CODE 2019 (Year)

Addenda to N/A (Date) (if applicable), and Code Cases N/A (Numbers)

Manufacturer's Partial Data Reports properly identified and signed by Commissioned Inspectors are attached for the following items of this report:

N/A
(Name of part, item number, mfr's. name and identifying Certification Mark)

6. Shell or drums 1 (no.) SA516-70 (mat'l. spec. gr.) .500" (thickness) 6' 11" [diameter (ID)] 17' 6" (length, inside) N/A [diameter (ID)] N/A (length, inside)

7. Joints WELDED [long (seamless, welded)] 100% [efficiency (as compared with seamless)] WELDED [girth (seamless, welded)] 3 (no. of shell courses)

8. Heads N/A
(Material Specification No.: Thickness - Flat, Dished, Ellipsoidal - Radius of Dish)

9. Tubesheet SA516-70 .750" (Mat'l. Spec., Grade, Thickness) Tube Holes 2.525" (Diameter)

10. Boiler Tubes: No. 140 SA178A (Mat'l. Spec., Grade) Straight (Straight or Bent)

Diameter 2.5" Length 210.5" XID (If various, give max. & min.) Gage 12 (or thickness)

11. Furnace No. 1 Size 46" O.D. (O.D. or WxH) Length, each section N/A Total 213"

Type CORRUGATED
(Plain, Adamson, Ring Reinforced, Corrugated, Combined, or Stayed)

SA516-70, .625" (Mat'l. Spec., Grade, Thickness) Seams: Type WELDED (Seamless, Welded)

12. Staybolts: No. N/A Size N/A
(Diameter, Mat'l. Spec., Grade, Size Telltale, Net Area)

Pitch N/A (Horizontal and Vertical) MAWP N/A .

13. Stays or braces

Location	Material Spec. No.	Type	No. and Size	Maximum Pitch	Fig. PFT-32 L/I	Dist. Tubes to Shell	MAWP
(a) F.H. above tubes	SA675-70	DIAGONAL	7-1.375"	10.875"	1.18	21.250"	200
(b) R.H. above tubes	SA675-70	DIAGONAL	7-1.375"	10.875"	1.18	21.250"	200
(c) F.H. below tubes	N/A	N/A	N/A	N/A	N/A	N/A	N/A
(d) R.H. below tubes	N/A	N/A	N/A	N/A	N/A	N/A	N/A
(e) Through stays	N/A	N/A	N/A	N/A	N/A	N/A	N/A
(f) Dome braces	N/A	N/A	N/A	N/A	N/A	N/A	N/A

14. Other Parts. 1. LWCO CONN. 2. SURFACE BLOWDOWN CONN. 3. AUXILIARY CONN.
(Brief Description - i.e.,Dome, Boiler Piping, etc.)

1. SA105 3-1" .210" 200PSI
2. SA105 1-1" .210" 200PSI
3. SA105 1-2" .297" 200PSI
(Mat'l. Spec., Grade, Size, Material Thickness, MAWP)

FORM P-2

Manufactured by **Superior Boiler Works, Inc., 3501-24 East 4th Avenue, Hutchinson, Kansas, 67501**

Mfr's Serial No. **19560** CRN **N/A** National Board No. **19560**

15. Openings:

(a) Steam **1-8" FLANGE 300# RFWN** (No., Size, and Type)

(b) Pressure Relief Valve **2, 2" COUPLING** (No., Size, and Type)

(c) Blowoff **2-1.5" COUPLING SHELL** (No., Size, Type, and Location)

(d) Feed **1-2" FLANGE 300# RFSO** (No., Size, Type, and Location)

(e) Manholes: No. **1** Size **12"X16"** Location **SHELL**

(f) Handholes: No. **8** Size **3" X 4"** Location **(2) FRONT TUBESHEET; (6) SHELL**

16. Fusible Plug (if used) **N/A** (No., Diameter, Location, and Mfr's. Certification Mark)

17. Boiler Supports: No. **4/4** Type **SADDLES/LUGS** (Saddles, Legs, or Lugs) Attachment **(2)BOLTED (2)WELDED / WELDED** (Bolted or Welded)

18. MAWP **200 psi** Based On **PFT-18** (Code Para. and/or Formula) Heating Surface **2046 sq. ft.** (Total)

19. Shop Hydrostatic Test **300 psi** **20. Maximum Designed Steaming Capacity** **22425 lb/hr**

21. Remarks

COMPLETE BOILER EXTERNAL PIPING PER P6: LWCO, PRESSURETROL; ALWCO, SURFACE BLOWDOWN, FEEDWATER & 3-VALVE BY-PASS, BLOWDOWN, SPOOL 19560-1, 5" ANGLE NON-RETURN VALVE, SPOOL 19560-2, 5" GATE VALVE, WAS HYDROSTATICALLY TESTED AT 300PSI ON 12/22/2020 WITH GAUGE # FT-12 CALIBRATED ON 10/12/2020 AND DUE ON 4/12/2021.

14. CONTINUED

Additional Remarks - See Attached P-6...

CERTIFICATE OF SHOP COMPLIANCE

We certify that the statements made in this data report are correct and that all details of design, material, construction, and workmanship of this boiler conform to Section I of the ASME BOILER AND PRESSURE VESSEL CODE.

Our Certificate of Authorization no. **3236** to use the (S) **S** Designator expires **July 9, 2023**

Date **01/20/2021** Signed _____ (Authorized Representative) Name **Superior Boiler Works, Inc.** (Manufacturer)

CERTIFICATE OF SHOP INSPECTION

Boiler constructed by **Superior Boiler Works, Inc.** at **3501-24 East 4th Avenue, Hutchinson, Kansas, 67501**.

I, the undersigned, holding a valid commission issued by the National Board of Boiler and Pressure Vessel Inspectors and employed by **The Hartford Steam Boiler Inspection and Insurance Company** have inspected parts of this boiler referred to as data items **4 thru 21** and have examined the Manufacturer's Partial Data Reports for items **N/A** and state that, to the best of my knowledge and belief, the manufacturer has constructed this boiler in accordance with Section I of the ASME BOILER AND PRESSURE VESSEL CODE. By signing this certificate, neither the inspector nor his employer makes any warranty, expressed or implied, concerning the boiler described in this Manufacturer's Data Report. Furthermore, neither the inspector nor his employer shall be liable in any manner for any personal injury or property damage or a loss of any kind arising from or connected with this inspection.

Date **01/20/2021** Signed _____ (Authorized Inspector) Commission **16157, KS776** (National Board Authorized Inspector Commission Number)

CERTIFICATE OF FIELD ASSEMBLY COMPLIANCE

We certify that the field assembly construction of all parts of this boiler conforms with the requirements of SECTION I of the ASME BOILER AND PRESSURE VESSEL CODE.

Our Certificate of Authorization no. _____ to use the (A) or (S) _____ Designator expires _____

Date _____ Signed _____ (Authorized Representative) Name _____ (Assembler)

CERTIFICATE OF FIELD ASSEMBLY INSPECTION

I, the undersigned, holding a valid commission issued by the National Board of Boiler and Pressure Vessel Inspectors and employed by _____

have compared statements in this Manufacturer's Data Report with the described boiler and state that the parts referred to as data items _____, not included in the certificate of shop inspection, have been inspected by me and that, to the best of my knowledge and belief, the manufacturer and/or the assembler has constructed and assembled this boiler in accordance with the applicable sections of the ASME BOILER AND PRESSURE VESSEL CODE. The described boiler was inspected and subjected to a hydrostatic test of _____. By signing this certificate, neither the inspector nor his employer makes any warranty, expressed or implied, concerning the boiler described in this Manufacturer's Data Report. Furthermore, neither the inspector nor his employer shall be liable in any manner for any personal injury or property damage or a loss of any kind arising from or connected with this inspection.

Date _____ Signed _____ (Authorized Inspector) Commission _____ (National Board Authorized Inspector Commission Number)

Form and version: *P2-12*

FORM P-6 MANUFACTURER'S DATA REPORT SUPPLEMENTARY SHEET

As Required by the Provisions of the ASME Boiler and Pressure Vessel Code Rules

1. Manufacturer (or Engineering-Contractor) **Superior Boiler Works, Inc., 3501-24 East 4th Avenue, Hutchinson, Kansas, 67501**
(Name and Address)

2. Purchaser **KC BOILER EQUIPMENT, 111 WEST 10th STREET, KANSAS CITY, Missouri, 63105**
(Name and Address)

3. Type of Boiler **SCOTCH MARINE**

4. Boiler No.

19560	N/A	21090357D REV A	19560
(Mfr's. Serial No.)	(CRN)	(Drawing No.)	(Nat'l Board No.)

2020
(Year Built)

Data Items
by Line No.

Additional Remarks:

4. DA STEAM CONN. SA105 1-2" 200PSI
5. LWCO PIPING 200PSI
PIPE: SA106B 1" SCH80
FITTINGS: SA105 1" 2000#; 1.25"X1"; A197 1" 300#
VALVES: BALL 1PC 1" CLASS 250#; LWCO 1PC 1" CLASS 250#
6. PRESSURETROL PIPING 200PSI
PIPE: SA106B .75" SCH80; SYPHON LOOP .25" # 14026
FITTINGS: SA105 .75" 2000# 3000# .75"X.25"
CONTROLS: 3PCS .25" CLASS 300#
7. ALWCO PIPING 200PSI
PIPE: SA106B 1" SCH80
FITTINGS: SA105 1" 3000#; A197 1" 300#
VALVES: BALL 1PC 1" CLASS 250#; ALWCO 1PC 1" CLASS 250#
8. SURFACE BLOWDOWN PIPING 200PSI
PIPE: SA106B 1" SCH80
FITTINGS: SA105 1" 3000#
VALVES: GATE 1PC 1" CLASS 800#
12. FEEDWATER & 3-VALVE BY-PASS PIPING 200PSI
PIPE: SA106B 2" SCH80
FITTINGS: SA105 2" 2000#; A197 2" 300#
VALVES: CHECK 1PC 2" CLASS 800#; GLOBE 1PC 2" CLASS 800#; GATE 3PCS 2" CLASS 800#
10. BLOWDOWN PIPING 200PSI
PIPE: SA106B 1.5" SCH80
FITTINGS: SA105 1.5" 2000# 3000#
VALVES: QUICK OPENING 2PCS 1.5" CLASS 300#; SLOW OPENING 1PC 1.5" CLASS 200#Combined bare tube and extended water-heating surface is 2046 sq. ft.

Date **01/20/2021** Signed **Superior Boiler Works, Inc.** by

Date **01/20/2021**

(Authorized Inspector)

Commissions **16157, KS776**
(National Board Commission Number and Endorsement)

FORM P-7 MANUFACTURER'S DATA REPORT FOR PRESSURE RELIEF VALVES

As Required by the Provisions of the ASME Code Rules, Section I

1. Boiler manufactured by **Superior Boiler Works, Inc., 3501-24 East 4th Avenue, Hutchinson, Kansas, 67501** (Name and address of manufacturer), P-7 ID No. **19560**

2. Boiler manufactured for **KC BOILER EQUIPMENT, 111 WEST 10th STREET, KANSAS CITY, Missouri, 63105** (Name and address of purchaser)

3. Location of installation **KC BOILER EQUIPMENT, 111 WEST 10th STREET, KANSAS CITY, Missouri, 63105** (Name and address)

4. Unit identification **SCOTCH MARINE** (Complete boiler, superheater, waterwall, economizer, etc.) ID Nos. **19560** (Mfr's. Serial No.) (CRN) **21090357D REV A** (Drawing No.) **19560** (Nat'l. Board No.)

5. Identification of Pressure Relief Valves

Tag No.	Service Location	Quantity	Size	Manufacturer Name	Design or Type No.	Material* / Conn.**	Set Press.	Capacity
A21	SHELL	1	2"X2.5"	KUNKLE	6021JH	5C	200	14111
M20	SHELL	1	1.5'X2"	KUNKLE	6021HG	5C	200	8612

*Material: (1) SA-216, WCB. (2) SA-217, WC6. (3) SA-217, WC9. (4) SA-182, F 22. (5) Other SB62 OR A584

**Connector type: (A) Groove Weld. (B) Socket Weld. (C) Threaded. (D) Flanged.

6. Unit Relieving Capacity

Circuit	Minimum Required	Furnished
Boiler	22425 LB/HR	22743 LB/HR
Economizer		
Superheater		
Reheater Inlet		
Reheater Outlet		
Other		

7. Determination of Unit Relieving Capacity

Is PG-67.2.1.1 applicable to this boiler? ☑ No ☐ Yes

Approach taken to address capacity ☐ PG-67.2.1.1.1 ☑ PG-67.2.1.1.2

Manufactured by **Superior Boiler Works, Inc., 3501-24 East 4th Avenue, Hutchinson, Kansas, 67501**

Form P-7 ID no. **19560**

CERTIFICATE OF COMPLIANCE

We certify the statements of this Manufacturer's Data Report for Pressure Relief Valves to be correct and that all details conform to Section I of the ASME BOILER AND PRESSURE VESSEL CODE.

Our Certificate of Authorization No. **3236** **to use the (S) or (M)** **S** **Designator expires** **07/09/2023** .

Date **01/20/2021** **Signed** _____ Name **Superior Boiler Works, Inc.**

(Authorized Representative) **(Manufacturer)**

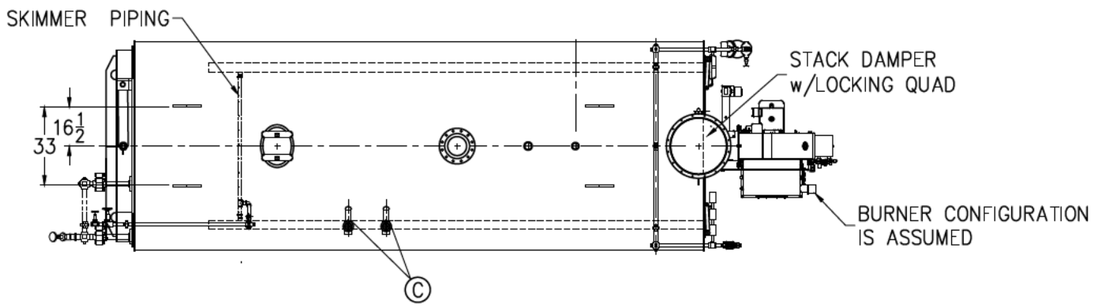

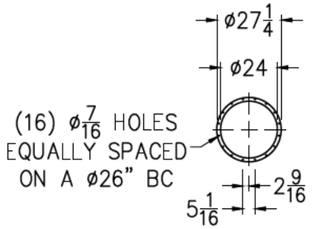

STACK FLANGE DETAIL

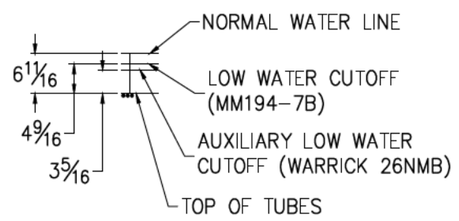

WATER LEVEL SEQUENCE

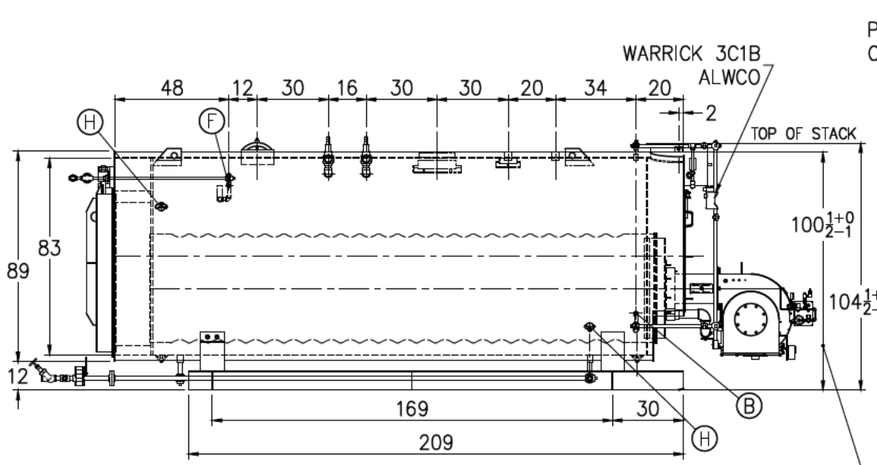

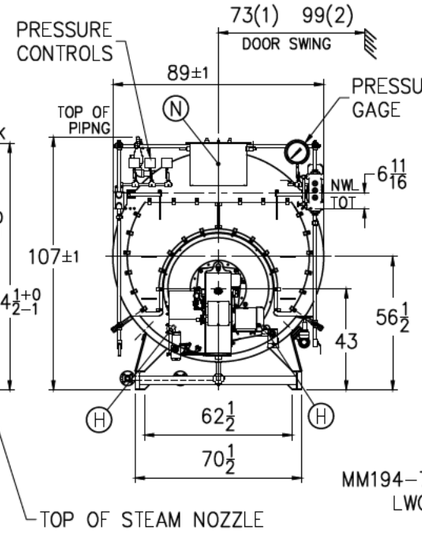

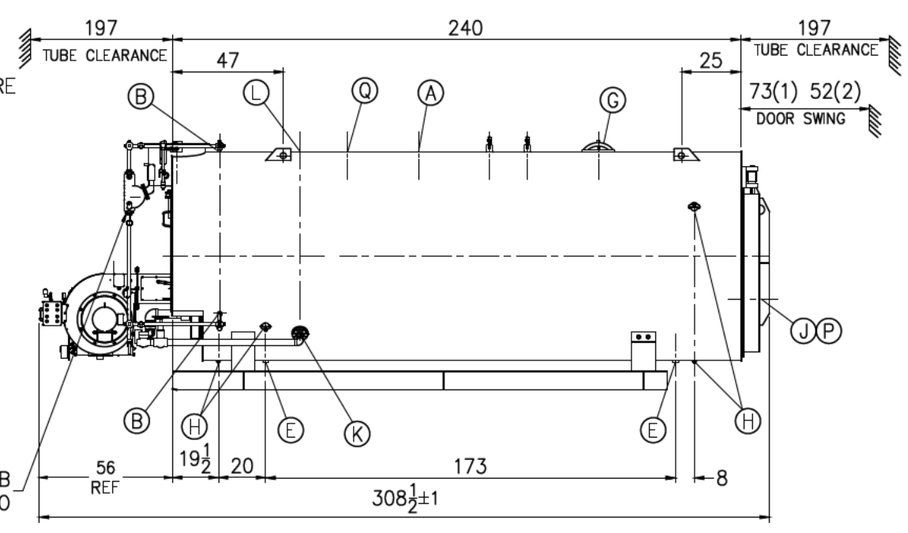

BOILER CONNECTIONS

A.(1)	STEAM OUTLET	8" 300# FLG
B.(3)	LWCO	1" NPT
C.(2)	SAFETY VALVE	2" NPT
D.( )	SAFETY VALVE	
E.(2)	BOILER BLOWDOWN	1 1/2" NPT
F.(1)	SURFACE BLOWDOWN	1" NPT
G.(1)	MANWAY	12" x 16"
H.(8)	HANDHOLE	3" x 4"
J.(1)	CLEANOUT	19" ID
K.(1)	FEEDWATER	2" 300# FLG
L.(1)	AUXILIARY	2" NPT
M.( )	LOW FIRE HOLD	
N.(1)	STACK TEMP	1/2" NPT
P.(1)	SIGHT PORT	1 1/4" NPT
Q.(1)	DA STEAM SUPPLY	2" NPT
R.( )		
S.( )		

RATINGS & CAPACITIES

HORSEPOWER	650*	
DESIGN PRESSURE	200 PSI STEAM	
GROSS OUTPUT	21,759 MBH*	
STEAM (FROM & AT 212°F)	22,425 LB/HR*	
HEAT RELEASE: (FURNACE ONLY)	150,322 BTU/CuFt*	
RATED INPUT	27,198 MBH*	
HEATING SURFACE (ASME)	2046 SqFt	
FURNACE HEATING SURFACE	218.51 SqFt	
FURNACE VOLUME:		
FURNACE ONLY	180.93 CuFt	
STEAMING VOLUME	77.02 CuFt	
STEAM RELEASE AREA	91.42 SqFt	
WATER CAPACITY:		
(FULL)	2,838 Gal	@ 23,608 Lbs
(NWL)	2,262 Gal	@ 18,816 Lbs
SHIPPING WEIGHT:	31,800 Lbs	

LTR	DATE	REVISION	BY
A	11-10-20	ADD BURNER, OAL, & SKIMMER, REVISE PIPING	ADR MM

NOTES

1. ALL CONTROLS MOUNTED AS PER SPECIFICATION SHEET.
2. SPECIFICATION SHEET TAKES PRIORITY OVER R & D SHEET.
3. REAR DOOR SWING: (1) MIN SIDE, MAX REAR
   (2) MAX SIDE, MIN REAR
4. BOILER DESIGN CODE ASME SECTION I LATEST EDITION.
5. BOILER INSULATED WITH 2"-8# DENSITY MINERAL FIBER INSULATION WITH 22 GAUGE STEEL JACKET.
6. ALL DIMENSIONS ARE ±1/2" UNLESS OTHERWISE NOTED.
*7. HORSEPOWER & RELATED INFO BASED ON 3.1 SqFt FIRING.

SUPERIOR BOILER

CHECKED BY	M.M	DATE	10-22-20
DRAWN BY	A. REUSSER	DATE	10-20-20

BOILER — BOILER MODEL: 11-X-2000-S200-M

SCALE: 1/64

DRAWING No: 21090357

REPRESENTATIVE: KC BOILER EQUIPMENT

PROJECT: RENTAL BOILER

THIS DRAWING IS THE PROPERTY OF SUPERIOR BOILER WORKS & SHALL NOT BE REPRODUCED IN PART OR IN WHOLE, & NONE OF ITS INFORMATION SHALL BE REVEALED WITHOUT PERMISSION OR TO THE DETRIMENT OF THE OWNER. IT MUST BE RETURNED UPON REQUEST.

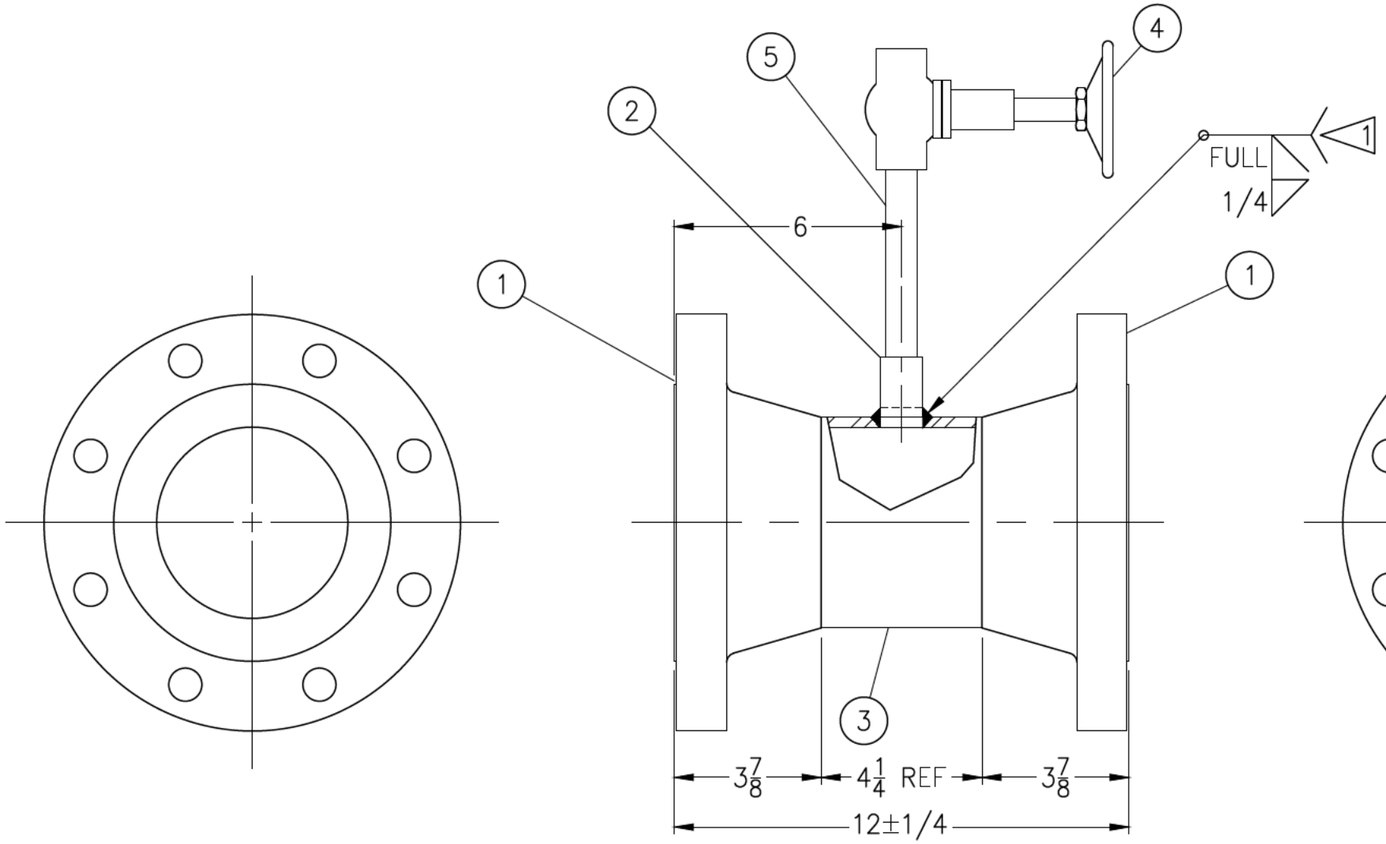

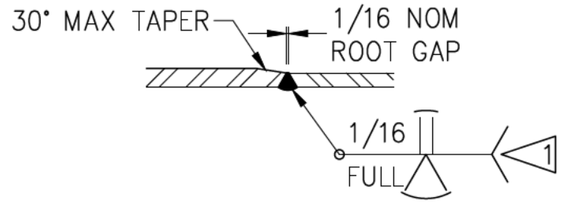

TYP MISMATCH WELD DETAIL
(WHEN REQUIRED)
(NOT TO SCALE)

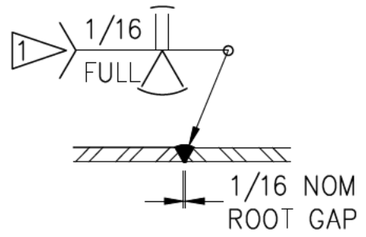

TYP WELD DETAIL
(NOT TO SCALE)

1. APPROXIMATE SHIPPING WEIGHT: 82 Lbs.
2. FLANGE BOLT HOLES TO STRADDLE CENTERLINE AS SHOWN
3. USE WPS ON FORM 12.3.8A.

ASME SECTION B31.1
DESIGN PRESSURE–200 PSIG.
HYDRO TEST AT 300 PSIG.
PARAGRAPH 104
P = DESIGN PRESSURE
S = 17,100 PSI @ 650°F
E = 1.0
y = 0.4
A = 0
Do = ACTUAL PIPE OD

$$t\ min = \frac{PDo}{2(SE+Py)} + A$$

5"

$$t\ min = \frac{200 \times 5.563}{2 \times (17{,}100 \times 1.0 + 200 \times .4)} = .032"$$

t nom = t min + 12.5% t min = .036"

ITEM No	PART No	No REQ'D	NAME OF PART	MATERIAL
5	908–004–011	1	NIPPLE	SA53B OR SA106B 1/2" x SCH80 x 6"
4	905–019–701	1	VALVE GATE	FS 1/2" 800#
3	006–050–002	1	PIPE	SA53B OR SA106B 5" x .258 WALL x 4 1/4"
2	908–032–001	1	COUPLING FULL	SA105 1/2" 3000#
1	908–042–105	2	FLANGE WELDNECK RF	SA105 5" 300# STD BORE

LTR	DATE	REVISION	BY

CHECKED BY
DATE
DRAWN BY A. REUSSER
DATE 10–11–20

THIS DRAWING IS THE PROPERTY OF SUPERIOR BOILER WORKS AND SHALL NOT BE REPRODUCED IN PART OR IN WHOLE, AND NONE OF ITS INFORMATION SHALL BE REVEALED WITHOUT PERMISSION OR TO THE DETRIMENT OF THE OWNER. IT MUST BE RETURNED UPON REQUEST

DRAWING NAME
200# DESIGN
SPECIAL SPOOL ASS'Y 5" 300# x 5" 300# x 12" w/1/2" DRAIN

SUPERIOR BOILER

SCALE 1/4
CODE APPR'D

DRAWING No
21090357SPL2

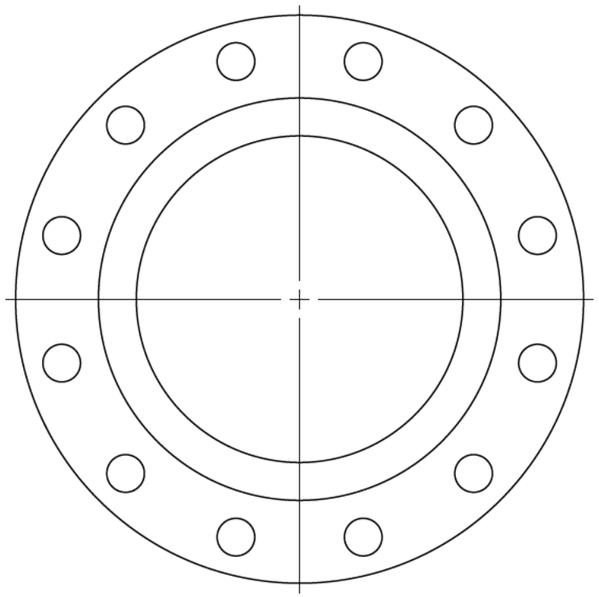

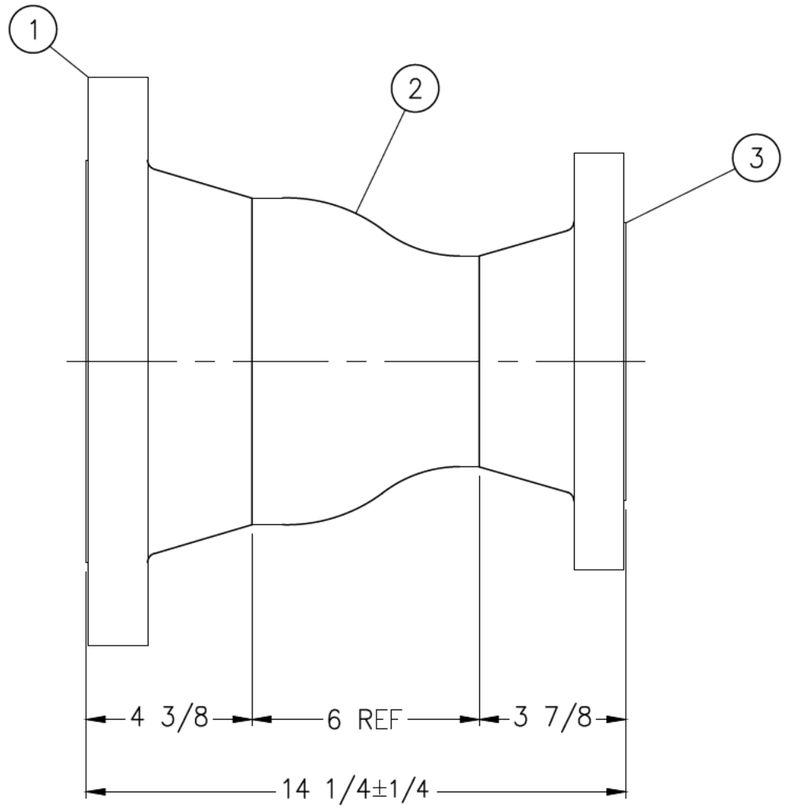

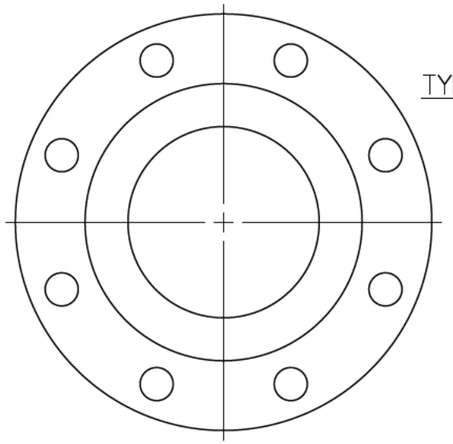

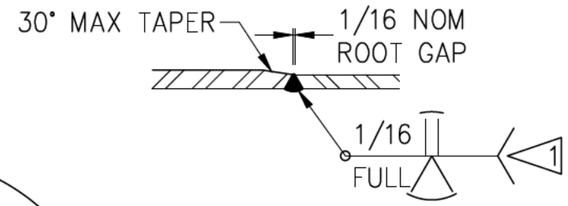

TYP MISMATCH WELD DETAIL
(WHEN REQUIRED)
(NOT TO SCALE)

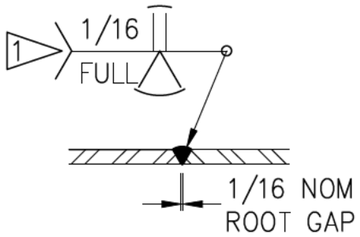

TYP WELD DETAIL
(NOT TO SCALE)

ASME SECTION B31.1
DESIGN PRESSURE–200 PSIG.
HYDRO TEST AT 300 PSIG.
PARAGRAPH 104
P = DESIGN PRESSURE
S = 17,100 PSI @ 650°F
E = 1.0
y = 0.4
A = 0
Do = ACTUAL PIPE OD

$$t\ min = \frac{PDo}{2(SE+Py)} + A$$

8"

$$t\ min = \frac{200 \times 8.625}{2 \times (17{,}100 \times 1.0 + 200 \times .4)} = .050"$$

t nom = t min + 12.5% t min = .056"

5"

$$t\ min = \frac{200 \times 5.563}{2 \times (17{,}100 \times 1.0 + 200 \times .4)} = .032"$$

t nom = t min + 12.5% t min = .036"

NOTE:
1. APPROXIMATE SHIPPING WEIGHT: 117 Lbs.
2. FLANGE BOLT HOLES TO STRADDLE CENTERLINE AS SHOWN.
1> 3. USE WPS ON FORM 12.3.8A.

ITEM No	PART No	No REQ'D	NAME OF PART	MATERIAL
3	908–042–105	1	FLANGE WELDNECK RF	SA105 5" 300# STD BORE
2	908–050–085	1	CONCENTRIC REDUCER	SA234WPB 8" x 5" STD WGT
1	908–042–002	1	FLANGE WELDNECK RF	SA105 8" 300# STD BORE

LTR	DATE	REVISION	BY

CHECKED BY | DATE

DRAWN BY: A. REUSSER | DATE: 11–10–20

THIS DRAWING IS THE PROPERTY OF SUPERIOR BOILER WORKS AND SHALL NOT BE REPRODUCED IN PART OR IN WHOLE, AND NONE OF ITS INFORMATION SHALL BE REVEALED WITHOUT PERMISSION OR TO THE DETRIMENT OF THE OWNER. IT MUST BE RETURNED UPON REQUEST

DRAWING NAME: 8" 300# x 5" 300# 200# DESIGN SPECIAL SPOOL ASS'Y

SUPERIOR BOILER

SCALE: 1/4 | CODE APPR'D

DRAWING No: 21090357SPL1

3524 East 4th Avenue
Hutchinson, KS 67501
PH: (620) 662-6693
FAX: (620) 662-7586
www.superiorboiler.com

BOILER INSTALLATION INSTRUCTIONS

RECEIVING THE BOILER

During the construction of your new boiler, over one hundred (100) separate inspections were made of the unit. These inspections started with the engineering drawing, which your unit was built to, and ended with the signing of the bill of lading by the freight carrier. These inspections were made by our Quality Control Department and our insurance inspection agency. At the time the freight carrier signed the bill of lading at our factory, he acknowledged that the unit was received by him in an undamaged condition. It is good practice for you, prior to signing the freight carrier's delivery receipt to examine your boiler in detail to be sure that the unit has not been damaged in transit. If damage is evident, make a notation on the freight bill of the damage and file a claim against the carrier for the cost of replacement or repair. In the event your boiler-burner unit should have sustained concealed damage (damage which is not outwardly evident), you have up to fifteen (15) days after receipt of the unit to file a claim covering repair or replacement of the concealed damage. Most of our units are shipped with certain fragile and easily damaged parts packaged in a separate box. The freight bill will describe the number of pieces shipped. Be sure that all pieces noted on the freight bill are received.

UNLOADING THE BOILER-BURNER UNIT

Your new boiler-burner unit is equipped with lifting eyes, located on the top center line. These are to be used for unloading. A crane is the best means of unloading and setting the new unit in place. DO NOT USE A LIFTING CABLE AROUND THE UNIT. DO NOT USE A FORK LIFT UNDER THE DRUM OF THE BOILER.

EXTENDED OUTDOOR STORAGE

If a newly delivered boiler is to be placed outdoors for a long period, the following steps are beneficial:

1) The boiler should be placed on crossties under the legs, preferably on a concrete or asphalt surface.
2) Make certain that all water has drained out of the shell and bottom blowdown piping.
3) Plug all remaining open connections in the boiler shell and close all blowdown valves – bottom, water column, and surface.
4) Remove the manway cover and place trays of silica gel desiccant on the uppermost row of tubes. The condition of the desiccant should be checked weekly, and it should be replaced when it changes color.
5) The electrical enclosures and panels will also require silica gel in cloth bags to protect against condensation. These bags should also be checked weekly.
6) The entire boiler should be covered with a tarp, with emphasis on protection for the gas train, oil pump, air compressor, and low water cutoff junction box.

3524 East 4th Avenue
Hutchinson, KS 67501
PH: (620) 662-6693
FAX: (620) 662-7586
www.superiorboiler.com

PUTTING THE BOILER IN PLACE

See "BOILER UNLOADING INSTRUCTIONS" furnished with your boiler and in the original submittal.

THE BOILER ROOM

Local building codes and insurance requirements usually dictate the type of construction and the material to be used in the boiler room. The boiler room floor should be of adequate strength to support the weight of the boiler full of water. The boiler room floor should include a floor drain. It is advisable to use, when possible, wall and floor surfaces that permit hosing. Room should be provided in the boiler room to accommodate the boiler unit or units, boiler feedwater equipment, boiler water treatment equipment, fuel oil pumps, and any other equipment that may be required in the boiler room. Space should be provided at the rear of the boiler to completely open the rear door. Room must be provided at either the front or rear end of the boiler to permit re-tubing. If possible, re-tubing room should be provided at the burner end of the new boiler, as tube removal is considerably easier at this end.

Adequate space should be provided around each boiler to permit cleaning and inspection of all piping supplied with the boiler and attached to the boiler at the job site. Each boiler room must be provided with a combustion air opening. One square inch of free flow combustion air opening is required for each 14,000 BTU input rating of the boiler.

SETTING THE BOILER

After the boiler has been set in place, it is necessary that each unit be leveled. Once the boiler has been permanently installed and leveled, the skid bracket bolts should be loosened half a turn, but no more than one full turn, to allow for expansion of the boiler during operation.

CONNECTING THE STEAM LINE

Most states and jurisdictional agencies have adopted the A.S.M.E. Code, thus it is good practice to install the steam line as per this Code.

HIGH PRESSURE BOILER

Quoting from the A.S.M.E. Code: "Each discharge outlet, except safety valve, shall be fitted with a stop valve located at an accessible point in the steam delivery line, and as near the boiler nozzle as is convenient and practicable. When such outlets are over two inch (2") pipe size, the valve or valves used in the connections shall be of the outside screw and yoke, rising spindle type so as to indicate from a distance by the position of its spindle whether it is closed or open, and the wheel may be carried either on the yoke or attached to the spindle. A plug cock type valve may be used, provided the plug is held in place by a guard or gland, the valve is equipped to indicate from a distance whether it is closed or open, and the valve is equipped with a slow opening mechanism."

3524 East 4th Avenue
Hutchinson, KS 67501
PH: (620) 662-6693
FAX: (620) 662-7586
www.superiorboiler.com

TWO OR MORE HIGH PRESSURE BOILERS

"When boilers are connected to a common steam header, the connection from each boiler having a manhole opening shall be fitted with two (2) stop valves having an ample free flow drain between them. The discharge of this drain shall be visible to the operator while manipulating the valve. The stop valve shall consist preferably of one automatic valve of outside screw and yoke type or two (2) valves of the outside and screw and yoke type shall be used."

LOW PRESSURE HOT WATER BOILERS

Stop valve shall be placed in the supply and return pipe connections of a single hot water heating boiler installation to permit draining the boiler without emptying the system. When stop valves over two inches (2") are used, they shall be of the outside and screw yoke rising spindle type, or of such other type as to indicate at a distance by the position of its spindle or other operating mechanism whether it is closed or open. The wheel may be carried either on the yoke or attached to the spindle. If the valve is of the plug cock type, it shall be fitted with a slow opening mechanism and an indicating device, and the plug shall be held in place by a guard or gland. The steam design pressure of all valves used in water headers should equal or exceed the design pressure of the boilers they are attached to.

BLOWDOWN PIPING

Your new boiler is located with blowdown tappings on the bottom center line of the drum, a surface blowdown tapping approximately two o'clock on the drum, and the water column (if supplied) is equipped with a blowdown valve. Normally, the water column blowdown valve, the manual blowdown valve, and the surface blowdown valve are piped into a common header for discharge to a safe place. It is good practice to discharge blowdown to be exhausted through the roof of the boiler room, and the liquid of the blowdown to be discharged into a drain. In some instances, the blowdown prior to discharging into the separator is piped through a preheater located in the feedwater.

BLOWDOWN VALVES

The A.S.M.E. Code dictates the type of valve to be used on blowdown lines.

LOW PRESSURE BLOWDOWN AND DRAIN VALVES

Each boiler shall have a bottom blowoff or drainpipe connection fitted with a valve or cock connected to the lowest water space practicable.

HIGH PRESSURE BOILERS

"Straight run blow valves of the ordinary type, and valves of such type that dams or pockets can exist for the collection of sediment shall not be used for boiler blowdown service. Straight way "Y" type globe

3524 East 4th Avenue
Hutchinson, KS 67501
PH: (620) 662-6693
FAX: (620) 662-7586
www.superiorboiler.com

valves or angle valves may be used in vertical pipes, or they may be used in horizontal runs of piping provided they are so constructed or installed that the lowest edge of the opening through the seat is at least twenty-five percent (25%) of the inside diameter below the center line of the valve. Blowoff valves and pipe between them and the boiler shall be of the same size except where a larger pipe for return of condensation is used. If a blowoff cock is used, the plug shall be held in place by a guard or gland. The plug shall be distinctly marked in the line with the passage. On all boilers having working pressures exceeding 100 PSI, each bottom blowoff pipe shall have two (2) slow opening valves, or one (1) slow opening valve and a quick opening valve or cock." All blowoff valves must have a design pressure to or exceeding the design pressure of the boiler on which they are installed.

VENT CONNECTION

Your new boiler-burner unit is supplied with a forced draft burner which is capable of supplying all the air for combustion as well as draft. It is, therefore, necessary to supply only a simple stack through the boiler roof to convey the products of combustion to a point of safe discharge. For a boiler installation in a one-story building, the best and most economical stack is one of the same diameter as the stack outlet on the boiler directly through the boiler room roof.

WATER TREATMENT

Maximum trouble free boiler life is in most cases tied directly to proper boiler water treatment. Water treatment is a science of its own. The make up of water varies so much from one area to another, that there is no such thing as one treatment being effective in all areas. Treatment must be provided to prevent scale formation, oxygen corrosion, excess acidity, control of total dissolved solids, prevent caustic embrittlement, and so forth. We, therefore, recommend that you contact a reputable boiler treatment company operating in your area for advice in this field.

CALLING FOR INITIAL START-UP

The cost of start-up on your new unit has, in most cases, been included in the purchase price. In some instances, start-up has been quoted as a separate item. In either event, to prohibit you having to pay for this service twice, it is strongly recommended that you fill out the Superior Boiler Works, Inc. "Prestart-Up Inspection" (attached Form PSI-73) and mail it to your local Superior Boiler Works representative before asking for start-up service. This will eliminate the start-up man arriving at the job site before the unit is completely installed.

INITIAL START-UP

It is strongly recommended that only qualified personnel be allowed to work on your boiler. The design, manufacture, and assembly of your new unit is the result of years of engineering work and field testing. It is a sophisticated piece of equipment and can be properly serviced only by qualified people. We recommend that you contact your Superior Boiler Works representative for the name of experienced service personnel in your area.

3524 East 4th Avenue
Hutchinson, KS 67501
PH: (620) 662-6693
FAX: (620) 662-7586
www.superiorboiler.com

In initiating start-up, it is necessary that the boiler be filled with water to the proper water level, be supplied with the proper electrical voltage with the motors turning in the proper direction, have the proper fuels at the proper pressures piped to the burner to the unit, and have the boiler properly vented. All water lines must be connected and have the people trained in the operation of the unit present.

BOILER-BURNER MAINTENANCE

Periodically, the waterside surfaces of the boiler should be visually checked for scale formation, pitting, and corrosion. Scale collection should not be thicker than an eggshell, as scale is a good insulator and can considerably lower your boiler's overall efficiency. When lowering the water level or draining the boiler for inspection, caution must be used. DO NOT DRAIN A HOT BOILER QUICKLY. Good practice would dictate draining the boiler only after it has been out of service at least twenty-four (24) hours. IN NO CASE EVER FILL A WARM BOILER WITH COLD WATER. THIS WILL CAUSE TUBE LEAKAGE.

3524 East 4th Avenue
Hutchinson, KS 67501
Phone (620) 662-6693
Fax (620) 662-7586
www.superiorboiler.com

PRESTART-UP INSPECTION

Send to:_____

Address:_____

_____

Date:_____

Owner's Name_____ Location:_____

Boiler Model:_____ National Board No._____

1. Voltage of _____ connected to boiler_____
2. Make-up water connected to unit _____
3. Gas connected to burner Gas Pressure_____ _____
4. Fuel oil suction line tested and installed _____
5. Fuel oil tank filled with #_____ grade oil _____
6. Stack erected or connected to breeching _____
7. Steam or water lines connected to boiler _____
8. Condensate return tank vented _____

The above have been checked by:_____

as of the above date.

Requested Start-Up Date_____

Signed:_____

FORM PSI-73

3524 East 4th Avenue
Hutchinson, KS 67501
PH: (620) 662-6693
FAX: (620) 662-7586
www.superiorboiler.com

OPERATION AND MAINTENANCE INSTRUCTIONS

DAILY PROCEDURE

1. Blow primary LWCO down while burner is firing. Verify that feedwater pump cycles normally and that burner shuts off.
2. Observe burner starting sequence and flame characteristics to verify normal behavior. Check furnace for debris and sooting, also inspect refractory through flame.
3. If operating log is kept, enter reading; otherwise, conduct visual check of all pressure and temperature gauge readings.
4. Check safety valves, handholes and manway for signs of leakage.
5. If boiler is firing oil, check level in oil storage tank. If burner has an atomizing air compressor, check its lubricating oil level.
6. Check stack temperature. If temperature is higher than normal, check burner operation for over-firing or improper combustion.
7. Check temperature of water supplied to unit and if below 140 °F preheat return to about 165 °F.
8. Check water sample readings for proper chemical treatment.
9. Perform bottom blowdown at an interval set by Chemical Representative.

WEEKLY PROCEDURE

1. Check combustion control operation as outlined in check list section of service manual. Investigate and correct at once any failure.
2. Check the pressure limit shutdown. During this check, observe the operation of the programming control to make sure that the operation is as described in the sequence of operation section of the service manual.
3. Wipe the entire unit, particularly the operating parts, so that oil and dust do not accumulate.
4. If firing heavy oil, clean oil nozzle as detailed in burner manufacturer's instructions. Nozzle and electrode setting must be returned to original adjustments
5. Check chemical feed equipment against check list supplied by water treatment. company. Treatment should be introduced directly into the boiler or device located on discharge side of the feedwater pump.
6. Check auxiliary LWCO to verify that it shuts burner off.

MONTHLY PROCEDURE

1. Clean feedwater strainer between the pump and the condensate return tank.
2. Clean the air intake filter on the atomizing air, if air compressor is present. Replace filter oil with clean compressor lubricating oil.
3. Clean combustion air fan and air inlet assembly.
4. Check rear door for flue gas leaks and tighten bolts as required. Tighten bolts evenly - uneven tightening could cause leakage.
5. Check air flow and fuel pressure switches.
6. Manually blow boiler safety valves.
7. Clean scanner lens.

IF BURNER DOES NOT START CHECK FOR CONTROLLER FAULT CODE

1. Check all electric fuses.
2. Check water level in boiler.
3. Check limit controls to make sure they are making circuit.
4. Push motor or starter reset button.
5. Push reset button on the programming control.
6. Push reset on high and low gas pressure switches.
7. Push reset button(s) on LWCO and temperature devices.
8. If burner then fails to start, call a qualified service technician.

TO STOP BURNER

1. Switch off burner control switch or push emergency door switch.
2. Do not pull feedwater pump switch until boiler is cooled.

3524 East 4th Avenue
Hutchinson, KS 67501
PH: (620) 662-6693
FAX: (620) 662-7586
www.superiorboiler.com

SEMI-ANNUAL PROCEDURE

1. Cool boiler slowly to room temperature. (110°F minimum) **NOTE:** Failure to cool boiler slowly will possibly cause tubes to leak. This is very important! To assist cool down, use the Test/Run or Check/Run switch located on the programmer to run the blower.
2. Remove all the nuts and clamps around the front door flange, pry the door loose from the boiler and swing it away on the davits.
3. Using the flue brush and vacuum cleaner, brush through the tubes to the rear end of the boiler.
4. Soot and scale may be removed from the rear end of the boiler by removing the cleanout plug located at the bottom of the rear door and inserting vacuum cleaner hose. (Does not require large door to be opened.)
5. Check the rear door refractory and patch any cracks or spalled areas with high temperature cement. Refractory may be obtained from the factory.
6. Always replace the 1" ceramic fiber seal around the edge of the rear refractory with a new seal when rear door is opened and gasket is damaged.
7. Tighten front and rear door nuts evenly to take up any slack created through drying out.
8. Clean the peep sight glass or replace if required.
9. Flush air compressor as directed in service manual.
10. If boiler is used for a steam process with a high percentage of feedwater makeup, follow the Annual Procedure Items 2 & 3.
11. Clean & Adjust pilot Assy.

ANNUAL PROCEDURE

1. Follow steps 1 through 10 listed under Semi-Annual Procedure.
2. Clean water side of boiler as follows:
   - Open upper tri-cocks and any other available vent valves to prove that the boiler contains no steam.
   - Drain the boiler through the blow down valve. Start washing down tubes ASAP.
   - Wash down the inside (water side) of the boiler with a hose, making sure to get all sludge and scale out of bottom of boiler.
   - Remove all handhole covers and the manhole cover.
   - Inspect shell and tube surfaces for signs of corrosion or scale formation. If scale is forming (to any degree) on internal surfaces, chemical treatment is not correct. Consult chemical supplier.
   - Remove plugs from low water cutoff equalizer crosses and rod piping if scale is present. Remove low water cutoff head and clean float chamber. Reassemble with new gasket.
   - Using new gaskets, install the handhole covers and manhole cover.
   - Disconnect the piping on the discharge side of the feedwater pump and inspect for scale build up. Check stop and check valves for proper operation and replace if necessary.
   - Install new safety valves of proper pressure and capacity rating. If the safety valves have not been tested. Old valves may be refurbished by a reputable valve repair company in possession of a VR stamp and kept as spares.
   - Fill the boiler by means of the feedwater pump and reset the low water cutoff.
3. At the time of this yearly inspection and cleaning, it is recommended that the local State or insurance inspector, in addition to the SUPERIOR distributor, or agent, be called in to check the condition of the equipment. Chemical supplier should also be present.

3524 East 4th Avenue
Hutchinson, KS 67501
PH: (620) 662-6693
FAX: (620) 662-7586
www.superiorboiler.com

BOIL-OUT PROCEDURE

The following procedure is from "boiler water quality requirements and associated steam quality for industrial/commercial and institutional boilers" published by ABMA.

Boil Out of New Unit

The internal surfaces of a newly installed boiler will have oil, grease or other protective coatings used in manufacturing. Such coatings must be removed since these coatings lower the heat transfer rate and could lead to overheating of a tube and reduce unit operating efficiency. However, before boiling out procedures may begin, the burner should be ready for firing. The operator must be familiar with the procedure outlined in the boiler operating instruction manual.

Suggested procedure for boil out prior to initial operation:

1. *Trisodium phosphate and caustic soda* are the suggested chemicals for cleaning of newly installed boilers. The quantities will vary according to conditions, but an amount of one pound of each chemical per 50 gallons of water is suggested. Refer to boiler's manual for boiler water capacity.

2. When dissolving chemicals, the following should be observed:

(a) Use of suitable face mask, goggles, protective gloves and garments is required when handling or mixing caustic chemicals.
(b) Do not permit the dry chemical or solution to come in contact with skin or clothing.
(c) Always follow the safety precautions on the container's labeling, and be familiar with the contents of the Material Safety Data Sheets.
(d) Warm (80 to 100 °F) water should be put into a suitable container
(e) Slowly introduce the chemical into the water, stirring at all times until the chemical is completely dissolved.
(f) The chemical must be added slowly and in small amounts to prevent excessive heat and turbulence.

3. Before introducing the solution into the boiler, an overflow pipe should be attached to one of the top boiler openings and routed to a safe point of discharge.

CAUTION: Boiling out under pressure is not recommended for this class of boiler.
4. Water relief valves and steam safety valves must be removed before adding the boil out solution so that neither the solution nor surface contaminants will settle upon the valve seats. Use care in removing and reinstalling the valves.

3524 East 4th Avenue
Hutchinson, KS 67501
PH: (620) 662-6693
FAX: (620) 662-7586
www.superiorboiler.com

5. All valves in the piping to or from the system must be closed to prevent the boil out solution from getting into the system.

6. Gage glasses must be protected from contact with the boil out chemicals during procedure.

7. Fill pressure vessel with clean water until top of the tubes in a firetube/firebox boiler are covered. Add the cleaning solution and then fill to the top of the vessel. The temperature of the water used in this initial fill should be at ambient temperature and softened.

8. After filling, the boiler should then be fired intermittently at a low rate sufficient to hold solution just at the boiling point. Boil the water for at least five hours. **Do not produce steam pressure.**

9. After the five hour boil, begin to add a small amount of fresh water to create a slight overflow to carry off surface impurities. Continue boil and overflow until water clears. When water clears, shut burner off.

10. Let the boiler cool to 120°F, drain using caution that the water is discharged with safety.

11. Remove hand-hole covers and/or wash out opening and wash the waterside surfaces thoroughly using a high pressure water stream.

12. Inspect surfaces and if not clean, repeat the boil out.

13. After boil out, close all openings and reinstall safety or relief valves, gage glasses and other components. Fill the boiler with ambient treated water and fire unit at low fire until water temperature of at least 180°F is reached to drive off any dissolved gases.

14. Boiler is now ready for operation.

CAUTION: If boiler is not to be operated within 24 hours see section on lay-up.

<u>System Clean Out</u>
Many clean boilers have been ruined with system contaminants such as pipe dope, cutting oil, metal shavings or chips and other debris associated with installation. If these contaminants are not removed from the system, the debris will find its way back to the boiler.

3524 East 4th Avenue
Hutchinson, KS 67501
PH: (620) 662-6693
FAX: (620) 662-7586
www.superiorboiler.com

MAINTENANCE SCHEDULE

DAILY PROCEDURES

Blow primary LWCO down while burner is firing. Verify that feedwater pump cycles normally and that burner shuts off.

Observe burner starting sequence and flame characteristics to verify normal behavior.

If operating log is kept, enter readings; otherwise, conduct visual check of all pressure and temperature gauge readings.

Check safety valves, handholes and manway for signs of leakage.

WEEKLY PROCEDURES

Check function of auxiliary LWCO while burner is firing, verify proper response of alarms.

Check flame safety control's response to lack of flame with main gas off.

Standing Pilot – Shut pilot gas off, time relay response.

Intermittent Pilot – Start burner with pilot gas off, verify lockout.

Interrupted Pilot – Start burner with pilot gas on, verify lockout.

Determine that alarms are reacting to lockout.

During and after flame failure test, observe ignition spark and pilot flame for abnormalities.

Record pilot and main flame signals if proper meter is available.

If boiler is equipped with modulating burner, verify that adequate differential exists between operating and modulating controls to prevent short cycling.

Verify that main fuel valves are closing within specified timings; check valve position indicators.

MONTHLY PROCEDURES

Check air flow switches mechanically and electrically. Sail switches can remain stuck in closed position if shaft is dirty. Disconnect wire, start burner, verify that pilot does not light.

Check low fire start, proving switch circuit with voltmeter. Terminal must not be powered until motor returns to low fire position. If wire is disconnected, verify that pilot does not light.

3524 East 4th Avenue
Hutchinson, KS 67501
PH: (620) 662-6693
FAX: (620) 662-7586
www.superiorboiler.com

Check low fire start, proving switch circuit with voltmeter. Terminal must not be powered until motor returns to low fire position. If wire is disconnected, verify that pilot does not light.

Check open damper, proving switch circuit with voltmeter. Terminal must not be powered until motor reaches high fire position. If wire is disconnected, verify that motor remains at high position.

Test main gas valves for leakage. Close checking cock, connect hoses to open leak test valves, submerge hose ends in water, and watch for bubbling.

Test fuel pressure interlock switches. With burner in normal operation (preferably at high fire), raise low gas or oil pressure switch setpoint above available fuel pressure. Burner must shut off when visual indicator trips. Test high gas pressure switch by reducing setpoint below existing manifold pressure. Again, burner must shut off when indicator trips.

After returning to normal setpoints, burner must not restart until switches have been manually reset.

Test oil atomizing medium interlock by interrupting flow of compressed air or steam to burner. Oil valves must close, with subsequent flame safeguard lockout.

Manually lift safety valve with test lever while boiler is at normal operating pressure.

ANNUAL PROCEDURES

Since the LWCO wiring terminal strips tend to be at the highest operating temperatures found in the boiler control circuit, check wire insulation for brittleness, cracking, or missing patches.

Disassemble and clean all safety control related piping – LWCO equalizers, pressure control manifolds, and air flow switch tubes.

Check boiler pressure gauge against calibrated master gauge or with dead weight tester. New gauges are built to one percent (1%) accuracy.

Jumper operating control and run boiler under manual control at reduced load to determine if high limit control functions correctly.

Bypass both operating and high limit controls under manually controlled low load condition. Gradually bring boiler pressure up to safety valve setpoint. 15# valves must open at 15#. Valves rated 15 to 69# are permitted two percent (2%) tolerance, and 70 to 300# valves may vary by three percent (3%).

Remove gas line strainer basket and clean.

3524 East 4th Avenue
Hutchinson, KS 67501
PH: (620) 662-6693
FAX: (620) 662-7586
www.superiorboiler.com

THE FOLLOWING TWO PAGES ARE COPIES

OF THE

"MAINTENANCE, TESTING AND INSPECTION LOG"

FOR YOUR BOILER.

PLEASE REMOVE ONE TO MAKE

COPIES FOR YOUR USE.

Maintenance, Testing, and Inspection Log High/Low Pressure Steam Boilers	Building:	Month:	Year:
	Address:	Fuel Type:	
Person(s) to be notified in Emergency (Name and Telephone Number)		Boiler Number: Model Number:	

DAILY CHECKS

	1	2	3	4	5	6	7	8	9	10	11	12	13	14	15	16	17	18	19	20	21	22	23	24	25	26	27	28	29	30	31
(1) Observe Water Level																															
(2) Record Pressure																															
(3) Record Flue Gas Temp.																															

WEEKLY CHECKS (Enter Date)

	WEEK 1	WEEK 2	WEEK 3	WEEK 4
(1) Test Low Water Cutoff				
(2) Test Gate Glass				
(3) Observe Flame Condition				

MONTHLY CHECKS (Enter Date)

(1) Manual Lift Safety Valve				
(2) Review the Condition or Test Each Item	(A) Linkages		(F) Floor Drains	
	(B) Damper Controls		(G) Flame Detection Devices	
	(C) Stop Valves		(H) Limit Controls	
	(D) Refractory		(I) Operating Controls	
	(E) Flue Chimney Breeching		(J) Other:	
(3) Inspect Fuel Piping				
(4) Combustion Air Adequate/Unobstructed				

General Comments:

HIGH/ LOW PRESSURE STEAM BOILER
24 HOUR LOG

SUPERIOR BOILER, INC.
3524 EAST 4TH AVENUE HUTCHINSON, KS 67501
1 800 444 6693

BOILER NUMBER _____
DATE _____
National Board Number_____

CHECK EVERY ONE HOUR	TIME	WATER LEVEL	PRESSURE		TEMPERATURE			CHECK EVERY FOUR HOURS	FEED PUMP	CONDENSATE TANK	BURNER OPERATOR	FUEL SUPPLY		CHECK EVERY EIGHT HOURS	LWCO	LEVEL CONTROL	WATER COLUMN	GAUGE GLASS		CHECK EVERY SHIFT	WATER TREATMENT	BOILER BLOWDOWN	FEEDWATER MAKEUP	OPERATOR ON DUTY	REMARKS:
			STEAM	FEED PUMP	FEEDWATER	CONDENSATE	FLUE GAS																		

Maintenance, Testing, and Inspection Log High/Low Pressure Steam Boilers	Building:	Month:	Year:
	Address:	Fuel Type:	
Person(s) to be notified in Emergency (Name and Telephone Number)		Boiler Number: Model Number:	

DAILY CHECKS

	1	2	3	4	5	6	7	8	9	10	11	12	13	14	15	16	17	18	19	20	21	22	23	24	25	26	27	28	29	30	31
(1) Observe Water Level																															
(2) Record Pressure																															
(3) Record Flue Gas Temp.																															

WEEKLY CHECKS (Enter Date)

	WEEK 1	WEEK 2	WEEK 3	WEEK 4
(1) Test Low Water Cutoff				
(2) Test Gate Glass				
(3) Observe Flame Condition				

MONTHLY CHECKS (Enter Date)

(1) Manual Lift Safety Valve				
(2) Review the Condition or Test Each Item	(A) Linkages		(F) Floor Drains	
	(B) Damper Controls		(G) Flame Detection Devices	
	(C) Stop Valves		(H) Limit Controls	
	(D) Refractory		(I) Operating Controls	
	(E) Flue Chimney Breeching		(J) Other:	
(3) Inspect Fuel Piping				
(4) Combustion Air Adequate/Unobstructed				

General Comments:

HIGH/ LOW PRESSURE STEAM BOILER
24 HOUR LOG

SUPERIOR BOILER, INC.
3524 EAST 4TH AVENUE HUTCHINSON, KS 67501
1 800 444 6693

BOILER NUMBER _____
DATE _____
National Board Number_____

CHECK EVERY ONE HOUR	TIME	WATER LEVEL	PRESSURE		TEMPERATURE			CHECK EVERY FOUR HOURS	FEED PUMP	CONDENSATE TANK	BURNER OPERATOR	FUEL SUPPLY		CHECK EVERY EIGHT HOURS	LWCO	LEVEL CONTROL	WATER COLUMN	GAUGE GLASS		CHECK EVERY SHIFT	WATER TREATMENT	BOILER BLOWDOWN	FEEDWATER MAKEUP	OPERATOR ON DUTY	REMARKS:
			STEAM	FEED PUMP	FEEDWATER	CONDENSATE	FLUE GAS																		

3524 East 4th Avenue
Hutchinson, KS 67501
PH: (620) 662-6693
FAX: (620) 662-7586
www.superiorboiler.com

BOILER BLOWDOWN PROCEDURE

Proper boiler blowdown is an essential part of firetube boiler operating procedure. It is necessary to control the amount of total dissolved solids in the boiler water. The total dissolved solids should not exceed 3500 parts per million in a scotch marine boiler. If boiler blowdown is not controlled, excessive dissolved solids will have tendency to increase and concentrate to a point that will cause a foaming or a carry over condition which will contaminate the steam. High concentrations of total dissolved solids in firetube boilers have a tendency to collect as scale on the heat transfer surfaces. Scale is an excellent insulator and its collection on the heat transfer surfaces of a boiler considerably lessen the heat transfer capabilities. This results in overheating the boiler tubes and tubesheets which in turn will result in tube leakage. The following chart shows the loss of efficiency of various types and thickness of scale.

Thickness of Scale	Soft Carbonate	Hard Carbonate	Hard Sulphate
1/50”	3.5	5.2	3.0
1/32”	7.0	8.3	6.0
1/25”	8.0	9.9	9.0
1/20”	10.0	11.2	11.0
1/16”	12.5	12.6	12.6
1/11”	15.0	14.3	14.3
1/9”	-----	16.0	16.0

Boiler blowdown can be accomplished either manually or automatically. Manual blowdown involves the operating personnel opening the boiler blowdown valves for a predetermined length of time at regular intervals. Automatic blowdown can be accomplished by many methods. The most common method is the use of a surface blowdown skimmer attached to a calibrated blowdown valve which permits a continuous preset amount of boiler water to be blown down.

3524 East 4th Avenue
Hutchinson, KS 67501
PH: (620) 662-6693
FAX: (620) 662-7586
www.superiorboiler.com

The proper boiler blowdown rate can be easily figured when two things are known. It is necessary to know the total dissolved solids in the feedwater and it is also necessary to know the amount of make up water that the boiler is using. The amount of total dissolved solids in the feedwater can be determined from a water analysis. The amount of make up water being used is normally determined with the use of a water meter installed in the make up feedwater line. The correct amount of boiler blowdown as a percentage of feedwater can be figured with the following formula.

$$\text{Percentage of boiler blowdown} = \frac{\text{Total dissolved solids in the feedwater}}{\text{3500 – total dissolved solids in the feedwater}} \times 100$$

An example of the use of the above formula assuming the total dissolved solids in the feedwater at 200 parts per million is shown below.

Example: $\frac{200}{3500 - 200} \times 100 = 6\%$ of make up

BOILER WATER TREATMENT

Proper boiler water treatment is the most important factor toward extended trouble-free service from your new boiler. There are no universal treatments, as water can vary drastically from one source to another in the same area.

The most common cause of boiler tube failure is calcium and magnesium hardness which forms scale on the boiler, reducing heat transfer and causing overheating of the tubes. This eventually causes tube leakage. This can occur in a boiler using a high percentage of makeup water in a matter of days. For example, a 30 day period without treatment in some areas has resulted in the necessity of completely retubing a new boiler. The ultimate in boiler water treatment is completely de-mineralized water; however, the expense of de-mineralizing prohibits its use except in the larger boilers such as power plants, etc. The method of softening water most generally used for commercial boilers is with the Zeolite type water softeners. These softeners come in a variety of sizes and operating characteristics. The required softener size depends upon the hardness of the water being used, the size of your boiler, and the frequency of regeneration you desire. To give you some idea of the hardness in our water nationally, a map of the United States is below indicating hardness by area.

Lack of boiler blowdown closely follows hard water as a major cause of boiler tube failure. Most water contains minerals of several types, and when this water is heated to the point of making steam, these minerals are left behind in the boiler. It follows that in time the minerals have to be removed or soon they build up to the point (depending on the amount of minerals in your water) where the water in the boiler becomes thick and syrupy causing the boiler to foam, prime and pull water out with the steam. It is also factual that an overabundance of these minerals can keep the heat of the fire from transferring into the water, thus causing overheating and tube failure. Lack of boiler blowdown required the retubing of a new boiler in service only 4 months. Lack of boiler blowdown is also the cause of furnace tube replacements. The removal of these minerals is very simply achieved by a regular blowdown procedure, which can be accomplished either manually or automatically. The rate and frequency of blowdown again depends upon the size of your boiler, the amount of makeup water used, and the pressure at which your boiler is operated. Proper blowdown practice will maintain the total dissolved solids in your boiler below 3,5OO parts per million.

Hardness removal and proper blowdown are, in most cases, not sufficient for total treatment. The water in your boiler should be neither acid nor alkaline, sulfates, or Gyp water, when present, are a major cause of tube leakage, and oxygen, when present, must be removed to prevent internal corrosion.

We earnestly urge you to contact a reputable local water treatment firm to advise you on the proper treatment for your boiler. Water treatment is a science in itself and when properly applied to your boiler will save you many dollars that may otherwise be required for maintenance.

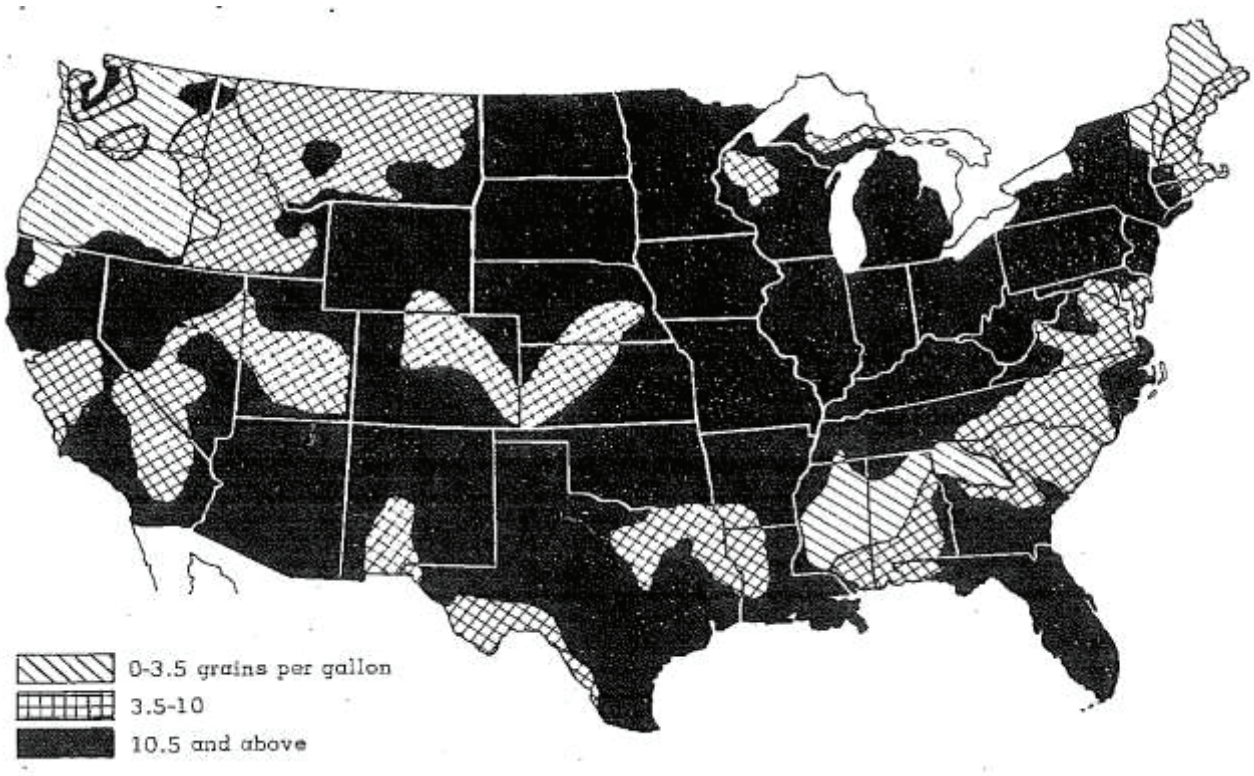

PROBLEM: Boiler blowdown removes a portion of the water from the boiler to lower the suspended and dissolved solids content of the system. Solids introduced with the boiler feedwater will tend to increase in concentration with time. How can you easily estimate the amount of blowdown required to keep boiler water solids concentration within recommended limits?

SOLUTION: First find allowable boiler water solids concentration from the table on page 3. Using the nomograph, place a straightedge connecting the allowable boiler water solids concentration on the left scale with feedwater solids concentration on the right scale, the answer in percentage of steam generated or feedwater flow is read directly from the center scale.

EXAMPLE: With a boiler operating at 800 psig, what would be the necessary blowdown, both as a percentage of steam generated and boiler feedwater flow, if there are 200 ppm total solids in the feedwater? (Note: From the chart, allowable solids concentration for a boiler operating at 800 psig is 1500 ppm.)

Ans.: 15.3% of steam generated; 13.2% of feedwater flow.

NOMOGRAPH

Boiler Blowdown

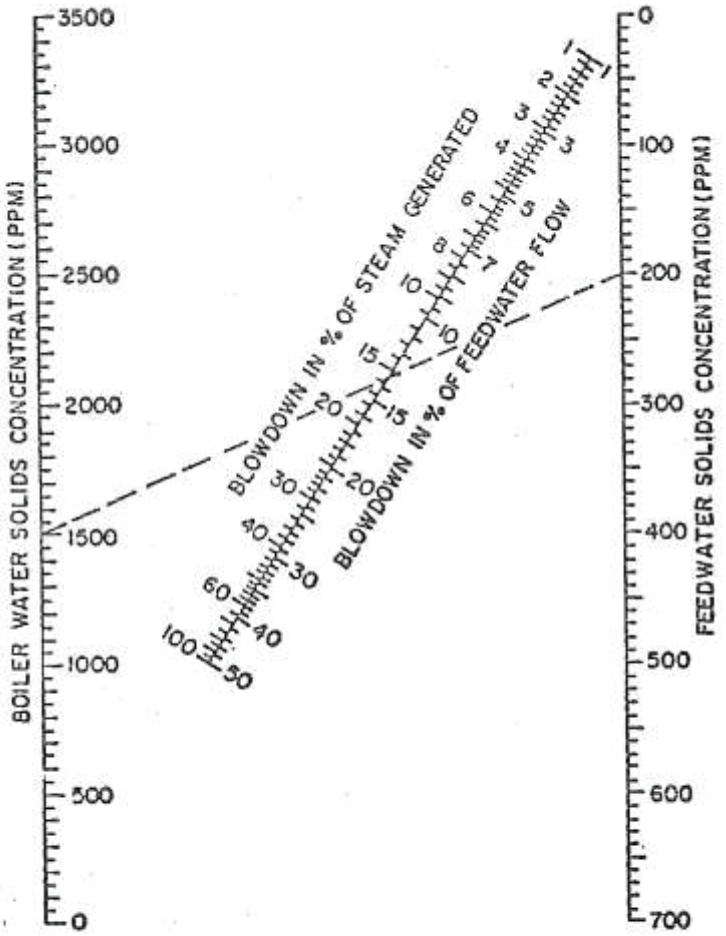

Boiler Outlet Pressure (psig)	Total Solids Concentration (ppm)
0-300	3500
301-450	3000
451-600	2500
601-750	2000
751-900	1500
901-1000	1250
1001-1500	1000

3524 E. 4TH Avenue
Hutchinson, KS 67501
PH: (620) 662-6693
FAX: (620) 662-7586
www.superiorboiler.com

FIRETUBE BOILERS WATER QUALITY ABMA RECOMMENDATIONS

BOILER WATER CONCENTRATION

Boiler Pressure psig	Total Dissolved Solids ppm	Total Alkalinity ppm as $CaCO_3$	Suspended Solids[2] Max. ppm	Silica[1] ppm	Total Iron[1] max. (FE) ppm
0-250	5000-3500	1200-900	100	150-100	10
251-350	4000-3000	900-700	25	120-100	8
351-450	3000-2500	800-600	10	80-50	5

NOTES:
1. Maximum values may not be achievable due to plant operating conditions or feedwater characteristics
2. Critically affected by operating conditions and year of boiler manufacturer

FEEDWATER LIMITS

Drum Pressure psi	Dissolved Oxygen (ppm)	Total Iron ppm	Total Copper ppm	Total Hardness ppm	pH	Nonvolatile TOC ppm	Oily Matter ppm
0 – 15	< 0.03	≤ 0.1	≤ 0.05	≤ 1.0	8.3 - 10.5	< 10	< 1
18 – 300	< 0.007	≤ 0.1	≤ 0.05	≤ 1.0	8.3 - 10.5	< 10	< 1
301 - 450	< 0.007	≤ 0.05	≤ 0.025	≤ 0.3	8.3 - 10.5	< 1	< 1

Bulletin SBW 10-2607- MM

3524 East 4th Avenue
Hutchinson, KS 67501
PH: (620) 662-6693
FAX: (620) 662-7586
www.superiorboiler.com

MAINTENANCE AND CARE RECOMMENDATIONS FOR YOUR NEW SCOTCH MARINE BOILER

With proper operation and maintenance you can expect years of trouble-free service from your new boiler. The procedure for correct operation and care of your unit is not complicated, nor is it time consuming; thus, we are outlining in this bulletin the function of each component of your unit and recommendations for its care.

PREPARATIONS PRIOR TO USE

It is necessary to clean the inside of the new boiler of oil and grease used as tube rolling lubricants. Failure to remove these materials will result in your unit foaming, priming, and pulling over. This cleaning operation is easily accomplished by following the practices as outlined below.

(a) Fill boiler to normal water line.
(b) Close valve in steam line.
(c) Remove safety relief valve(s).
(d) See “Boil-Out of a New Unit”.
(e) Connect a vent pipe to the safety relief valve port on the boiler and run this vent to a convenient drain.
(f) Fire the boiler at a low rate for three (3) to four (4) hours allowing the steam to discharge through the vent pipe installed in place of the safety relief valve.
(g) Drain the boiler while still warm. Remove top inspection plate, wash out handhole, and two (2) handhole plates in front of boiler. Wash interior of boiler with tap water at full pressure through a nozzle. Wash until all evidence of dirt, mud, and impurities are removed through the bottom handhole opening.

The boiler will be ready for service after replacing the safety valve and opening the steam valve.

The above cleaning operation also serves to dry the insulating refractory in your boiler.

BURNER CONTROLS AND OPERATION are found in the burner manufacturer’s instruction book.

3524 East 4th Avenue
Hutchinson, KS 67501
PH: (620) 662-6693
FAX: (620) 662-7586
www.superiorboiler.com

PRESSURE AND TEMPERATURE CONTROLS

Your boiler is operated automatically by a pressuretrol if a steam boiler, or aquastat if a water boiler. These operators serve two (2) functions; to shut the burner off when the desired pressure or temperature is reached and turn the burner on when the pressure or temperature drops below the desired level. The adjustment of the pressuretrol is made by rotating the larger of two (2) adjustment screws located on the top of the pressuretrol. Turn this screw until the indicator located on the side of the pressuretrol directly under the adjustment screw shows the desired pressure. This adjustment should be checked against the steam pressure gauge at the time the burner turns on. If the pressure gauge and the scale on the side of the pressuretrol do not agree, the scale on the pressuretrol should be moved up or down to agree with the pressure gauge. This is accomplished by loosening the four screws holding the scale to the pressuretrol. The second adjustment necessary for automatic operation is the adjustment of pressure at which the burner is to turn off. This is accomplished by rotating the smaller of the two (2) screws located on top of the unit and is read on the scale directly under this screw. This scale is calibrated as difference and indicates the pounds per square inch above the burner turn on point at which you want the burner to turn off.

On a water boiler, it is necessary only to adjust the aquastat to the desired operating temperature. This is indicated on the scale on the front of the aquastat. The unit then automatically maintains this preset temperature to within ten (10) degrees.

In all cases, the operating controls should be set at the lowest levels possible that will allow the boiler to do its assigned job. To set the operators higher than necessary wastes fuel.

LOW WATER CUTOFF

The function of this unit is to control the pump or solenoid supplying water to the boiler and to eliminate the possibility of firing the boiler without sufficient water.

Steam Boiler:

The low water cutoff is enclosed in the water column and is a float-operated mechanism. If the water level in the boiler drops, the float also drops. When the water level in the boiler drops three quarters of an inch (¾") below normal, the float operated mechanism turns on the device supplying water to the boiler. If for some reason water is not supplied (pump or solenoid inoperative, water not available, etc.), the low water cutoff breaks the electrical circuit to the burner and turns it off. The burner cannot be turned on until the water in the boiler is returned to the normal operating level. To insure proper operation of this unit, periodic blowdown of the water column is recommended. Blowdown is performed by rapidly opening the water column blowdown valve two (2) full turns and quickly closing the valve. The burner should be on when the blowdown is begun and should turn off during the blowdown. Should the burner continue to burn through the blowing down operation, the low water cutoff is not functioning properly,

3524 East 4th Avenue
Hutchinson, KS 67501
PH: (620) 662-6693
FAX: (620) 662-7586
www.superiorboiler.com

indicating that the float chamber should be cleaned. With a boiler supplying steam for processing, the water column should be blown down daily. With a heating boiler, blowdown should be performed weekly during the heating season.

Water Boiler:
The low water cutoff on a water boiler is a probe unit located on the top of the boiler. It has a probe extending down into the water in the boiler to within three inches of the top row of tubes. If the water level in the boiler drops below the probe, the burner electrical circuit is broken and the burner shuts off. The burner cannot light until the proper water level in the boiler is restored and a reset button on the low water cutoff is pushed.

BLOWDOWN

Heating Boilers:
Under your boiler near the back is a blowdown line and valve. The purpose of blowdown is to remove precipitates that collect in the boiler. With the average heating system, very little water has to be added to the boiler; thus, the same water is used over and over. The recommended boiler blowdown with a leak free heating system is the withdrawal of 2 gallons of water monthly from the boiler. In heating systems which require the addition of fresh water to the boiler frequently, it is good practice to blow the boiler down more frequently. This valve has a replaceable seat to facilitate repair in the event leakage appears.

Boilers Supplying Steam for Process:
The boiler blowdown operation is performed by opening the blowdown valve adjacent to the boiler all of the way, then rapidly opening and closing the second valve two (2) full turns. Blowdown should be performed while the boiler is under a light load. Daily blowdown is recommended for this type of service.

SAFETY VALVE

The purpose of this valve is to relieve any pressure in the boiler above its design limit. These valves are sized to relieve the BTU capacity of your boiler. It is good practice to manually open the safety relief valves on your boiler monthly if a heating boiler, or weekly if steam is used for processing. This is done by rapidly lifting and releasing the handle provided on the valve three (3) of four (4) times.

3524 East 4th Avenue
Hutchinson, KS 67501
PH: (620) 662-6693
FAX: (620) 662-7586
www.superiorboiler.com

INSPECTION AND WASHOUT PLATES

These openings are placed in the boiler to facilitate visual inspection, cleaning and re-tubing your boiler. Upon evidence of leakage, the plate should be tightened by taking up the nut holding it in place. It is not uncommon for a new unit or a newly gasketed plate to start seeping after being in use a short time inasmuch as the gasket softens a bit upon exposure to moisture and heat. This seepage can be stopped as pointed out above. It is good practice to always use new gaskets on these plates after they have been removed. Be sure there are no foreign particles on the seating surface of the plate or boiler before installing new gaskets. The use of oil, graphite paste or pipe dope on both sides of a new gasket aids in getting a leak proof seal. Do not tighten nuts with pressure on the boiler.

WATER TREATMENT

Heating Boilers:
Water treatment in a heating boiler is usually not a problem inasmuch as the same water is used over and over. Treatment is primarily to eliminate corrosion and pitting cause by alkalinity and oxygen. It is usually necessary to treat the water in a heating boiler once a year at the beginning of the heating season. Asking the advice of a competent water consultant about the treatment is recommended. The appearance of scale, corrosion or pitting is definite evidence that water treatment is needed.

Process Steam Boilers:
When the boiler supplies steam for processing, it is necessary to replace steam used with makeup water. Water treatment for boilers supplying process steam varies with analysis of water available. It is, therefore, strongly recommended that the owner secure the services of a reputable water chemist to run water analysis and recommend treatment.

PIPING

The piping on a boiler (water column – blowdown – safety relief valve vent) should be kept leak proof. A small leak, if allowed to continue, soon becomes a major problem. All vent and blowdown piping running vertically up should have means for draining the vertical run.

3524 E. 4th Avenue
Hutchinson, KS 67501
PH: (620) 662-6693
www.superiorboiler.com

BOILER LAY-UP PROCEDURE

FROM NBIC PUBLICATIONS

The primary purpose of laying up a boiler is to extend its life. A boiler should be shut down when not required to provide heat. We "lay-up" the boiler to prevent further corrosion on both the waterside and fireside, which enhances longevity. A secondary purpose of laying up a boiler – and an economic savings opportunity – is to perform an inspection of its condition during shutdown. This aids in evaluating the water treatment requirements on the waterside and the combustion efficiency on the fireside.

The recommended method of boiler lay-up is dictated by a boiler's type and size and by economic safety-oriented advantages achieved performing the lay-up.

There are different types of lay-up to be aware of. This article focuses dry lay-up and wet lay-up. Some factors in the selection of lay-up include length of shutdown time, size and type of boiler, and the amount of effort to refill and monitor the boiler with treated water.

Before beginning lay-up and cleaning of a boiler, be sure that the combustion system is performing efficiently. This will minimize creation of soot in a clean boiler when started in the fall.

Dry Lay-up:

Dry lay-up should be used when the boiler will be shut down for an extended period or when there is no urgency to restart (as with a standby boiler). This method also works in areas where the boiler may be exposed to subfreezing temperatures. Unlike the wet lay-up method, it requires a minimal amount of monitoring.

After performing a lock-out and tag-out of the system, the steps for dry lay-up can be as simple as:

1 – Draining the boiler

Perform a bottom blow-off on the boiler before and then after shutdown to remove sediment and scale and to drop the unit's pressure and temperature. Once the unit is at zero psi gage pressure and water temperature is under 140°F, open an air vent and boiler drain to empty the boiler. Do not use the safety valves for vents. If a vent is not installed, remove the plug or cap on the top cross-fitting of the water column and install one on the side of a tee. This will also allow venting of air during the refill of the boiler.

2 – Opening the fireside

When cleaning the boiler, remember that soot is easier to remove when it is warm and dry. Some technicians fire the boiler to the water and soot warm before cleaning. The method of removing the soot on the tubes must take into account tubes using extended heating surfaces or dimpled tubes. Manufacturer's instruction should be followed to the minimize removal on the tubes.

While cleaning the boiler's fireside, look for rust (orange) or scale (grayish-white) trails the pressure boundary wall. Mark those areas for further evaluation of leakage. Look for soot trails on fireside gaskets to evaluate possible short-circuiting of combustion gases, corrosion of the gasket seating surface, and overheating of air-cooled surfaces. Discolored or chalky paint is an indication of possible overheating.

3524 E. 4th Avenue
Hutchinson, KS 67501
PH: (620) 662-6693
www.superiorboiler.com

Inspect refractory and insulation on the fireside. Small cracks in refractory are normal due to expansion and contraction, especially where openings such as observation ports pass through the refractory.

3 – Opening the waterside
With the outlet, feed, and make-up valves locked and tagged closed, and air vent valve locked and tagged open, remove all inspection opening closures.

Look for signs of gasket leakage and potential corrosion of the gasket seating surface (which could prevent a good seal). Inspect all handhole and manway yoke bolts and nuts for deterioration (which could prevent uniform tightening of the gasket). Using a battery -operated light, inspect the waterside (in accordance with all applicable confined space entry procedures) and evaluate the scale and corrosion condition. Wash down the boiler and attempt to move all scale and sediment out of the washout openings at the bottom of the boiler. Any scale and sediment not removed will trap moisture and oxygen and corrode the boiler.

4 – Drying all surfaces
Depending on ambient air temperature, a fan can be used to blow dry the waterside. Electric air heaters can be used on the fireside to warm and dry out the waterside. It is not recommended to use fuel-fired air heaters because of the potential of adding moisture or getting petroleum products on the waterside or soot on the fireside.

5 – Performing examination
Closely examine all surfaces showing potential leakage. Dye-penetrant examination is an inexpensive method to check leaks for potential cracking. A pressure test may be required before startup. Refer to the *National Board Inspection Code,* Part RB-1000 through 5000, and the National Board Website for guidance.

6 – Determining if any repairs are required
Make repairs using an organization meeting jurisdictional requirements. In most cases, the jurisdiction will require an "R" stamp. A listing of "R" organizations can be found in the Manufacturer/Repair Directory.

After examinations and repairs are completed, fireside surfaces can be swabbed with neutral mineral oil to prevent further corrosion. It is important to remember that the initial light-off may be a little smoky until the oil is burn off or the boiler water is hot enough to evaporate the oil.

7 – Closing the dry boiler
If the ambient air is always dry, the boiler can remain open. However, if humidity and dew points get high, then the boiler should be closed. Before closing the boiler, place moisture absorbing material such as silica gel or lime (also called unslaked lime, quick lime, calcium oxide, burnt lime, calx, and caustic lime) in the waterside and fireside. (This is not required on the fireside if it is swabbed with mineral oil). Use a flat tray or pan to contain the material. Set it inside boiler and close all openings. This material should be renewed or re-dried every three months.

The stack should also be covered to eliminate moisture accumulating near the boiler stack connection. A sign or tag should be placed on the boiler power disconnect to warn of the stack cover. A stack damper does not provide sufficient seal from the main stack. If the main stack cannot be sealed, slip a piece of sheet metal between the boiler exhaust flange and stack flange.

3524 E. 4th Avenue
Hutchinson, KS 67501
PH: (620) 662-6693
www.superiorboiler.com

For smaller boilers, incandescent lights have been used to keep the boiler and/or control panel warm to prevent the collection of moisture. Electrical safety should be considered before placing light fixtures in a boiler.

Wet Lay-up

(Recommended for steel water boilers and cast-iron boilers, both steam and water). The steps of preparing a boiler for wet lay-up are essentially the same for dry lay-up. The exception is when a boiler is closed and prepared to be filled with water and water treatment chemicals. Perform dry lay-up steps 1-6 (except do not swab the fireside with mineral oil) and then follow the step 7 below.

7 – Filling the boiler with water and treatment chemicals

The alkalinity should be adjusted to greater than 400 ppm. This prevents acidic corrosion of the waterside. Tri-sodium phosphate or caustic soda has been used in the past to accomplish this (about 3 pounds/1000 gallons). Also add an oxygen-scavenging chemical such as sodium sulfite to a concentration greater than 200 ppm (about 5 pounds/1000 gallons) or sodium chromate (100 ppm steam, 300 ppm water boilers) or hydrazine (consult a water treatment company for concentration information).

Fill the boiler to its normal operating level with water hotter than 180°F. This temperature helps drive off dissolved gases. If hot water is not available, heat the water using the boiler's burner after the water level reaches the lowest permissible level as marked on the boiler. Vent the air and gases as needed. Since there no feed or condensate tank to introduce the treatment chemicals on water boilers, it is recommended the chemicals be premixed with water before being placed in the boiler. Fill the boiler, allowing air to continue to vent until the water boiler is full or until the steam boiler is at its normal operating level and warm.

When Wet Lay-up is Complete

It is strongly recommended boiler water be circulated periodically to prevent stratification of chemicals. The burner can be used to warm the water and induce natural circulation. A water boiler can use it's system circulator, but will change the concentration of chemicals when diluted by system water.
Monitor the chemical concentrations routinely while in lay-up. System leaks will cause make-up water to be introduced and with it more oxygen and carbon dioxide.
Before starting a steam boiler in wet lay-up, perform a bottom blow-off of the boiler to reduce the alkalinity (thus minimizing the chance of carryover). For all boilers, ensure all tags and locks are removed, and witness the system cycles for a minimum of three (3) cycles. This will help ensure proper operation of the boiler before leaving it in automatic mode.

3524 East 4th Avenue
Hutchinson, KS 67501
PH: (620) 662-6693
FAX: (620) 662-7586
www.superiorboiler.com

MODULATING CONTROL ADJUSTMENT PROCEDURE

STEAM BOILERS

Given the fact that the approximate desired plant operating steam pressure is known, review the factory firetest pressure control settings (shown on the Firetest Report) and make the indicated adjustment change on each control. In the initial phase of adjustment, the original factory set spread between control settings should be maintained. Typical factory set points are stated below.

Boiler Type	Limit	Operator	Modulator
Low Pressure	12#	10#	8#
150 PSIG MAWP	110#	100#	75#
200 PSIG MAWP	180#	170#	140#
250 PSIG MAWP	225#	215#	180#
300 PSIG MAWP	270#	260#	225#

Turning the larger main scale adjusting screw CW will raise the pressure, while CCV rotation will decrease it. The same convention also pertains to the smaller differential adjusting screw. The manual reset high limit control has no differential screw.

After the boiler has been started up, the burner adjusted, and the safety devices checked out, the boiler should be put on line to carry a normal steam load. Note that control adjustment will be difficult to complete accurately if the load is either too high or too low. Control settings are determined by observing the steam pressure gauge at the point of switch function as opposed to relying on the pointer indication on the scale plate.

There is no benefit in adjusting the manual reset high limit and operating control switch set points too close to each other. In fact, this practice can lead to nuisance tripping and lockout of the high limit. A 10 PSIG spread is practical. The manual reset high pressure limit should not, if at all possible, be set any higher than safety valve set pressure minus ten percent (10%), while the automatic reset operating control MUST NOT be set any higher than ninety percent (90%) of the safety valve set pressure.

The minimum proportional band available on the 150 and 300 PSI Honeywell L91B modulating control is 5 and 12 PSI, respectively, while the maximum is 23 and 48 PSI. This means that the spread between operating control set point and modulating control set point must be greater than the proportional band in order to keep the burner in a continuous and modulated firing mode of operation.

The steam pressure control incorporate a subtractive switch differential that will require a minimum decrease in steam pressure of 8 and 15 PSI, respectively, on the 150 and 300 PSI models before the burner can start. The arithmetic difference between the modulator throttling band and the pressure switch

3524 East 4th Avenue
Hutchinson, KS 67501
PH: (620) 662-6693
FAX: (620) 662-7586
www.superiorboiler.com

differential should be added to the throttling band in order to establish the proper spread between control and set points.

If the differential between the operating and modulating controls is too small, the burner will shut down on incremental load reduction before it reaches its minimum input at low fire. This mode of operation will cause wide steam pressure swings in the steam header and poor tracking of load changes. Fuel consumption will increase due to additional standby losses and increased cyclic pre- and post-purging of a hot boiler. Linkage and valve wear will increase due to a higher frequency of operation. Boiler life will also be shortened due to the stressing caused by alternate cold air purge and high fire burner operations, as well as thermal cycling of the vessel structure.

The spread between operating and modulating control set points should be maintained at the highest practical level (two to three times the actual modulating control proportional band). In most applications, it is reasonable to set the operating control differential and the modulating control proportional band near their respective minimums. If the burner firing rate constantly hunts up and down, the proportional band should be widened until the burner responds only to pressure changes visible on the pressure gauge.

The final check for proper pressure control adjustments should be to reduce boiler load to zero over a period of two (2) minutes. The burner will rapidly modulate to low fire and hold there until the operating control shuts it off. If the burner shuts off before it reaches low fire, further adjustments will be required.

The maximum practical operating steam pressure that a boiler can be adjusted for and be determined by subtracting the various control and valve differentials from the boiler's design pressure. An example for a 200 PSIG boiler is detailed below.

10% Safety Valve Cushion	20#
Modulator Differential	12#
Total	32#

Subtracting the total above from two hundred (200) gives 168 PSIG as the maximum shell pressure that can be maintained without incurring the risk of cyclic stress damage to the boiler vessel. Please note that these numbers are based on the minimum available differentials for both the modulating and operating controls. If either control is adjusted to a higher differential, the maximum shell pressure will have to be reduced accordingly.

3524 East 4th Avenue
Hutchinson, KS 67501
PH: (620) 662-6693
FAX: (620) 662-7586
www.superiorboiler.com

STACK VELOCITY ESTIMATE PROCEDURE

Standard flue gas flow rate per million BTUH for both gas and oil fired boilers is tabulated below for various excess air levels, along with ACFM at 400 F.
°

TABLE 1

EXCESS AIR	SCFM	ACFM
0	175	285
10	191	310
15	199	323
20	207	336
25	215	349
30	223	362

If the stack temperature differs materially from 400 , the following multipliers may be used to calculate the ACFM for a given stack temperature.
°F

TABLE 2

STACK TEMP.	TEMP. CORR.
285	.85
300	.88
325	.91
350	.94
375	.97
400	1.00
425	1.03
450	1.06
475	1.09
500	1.12

Actual stack volumetric flow is then the ACFM for a particular excess air level multiplied by the firing rate in millions of BTUH multiplied by the stack temperature correction factor from Table 2.

3524 East 4th Avenue
Hutchinson, KS 67501
PH: (620) 662-6693
FAX: (620) 662-7586
www.superiorboiler.com

The next step in determining stack velocity is to divide the ADFM figured from Tables 1 and 2 by the time-adjusted stack area factor from Table 3.

TABLE 3

STACK DIA.	FACTOR
6	11.78
7	16.04
8	20.94
8	26.51
10	32.72
12	47.12
14	64.14
16	83.78
18	106.03
20	130.90
22	158.39
24	188.50
26	221.22
28	256.56
30	294.52
32	235.10
34	378.30
36	424.12
38	472.55
40	523.60

The result is stack velocity in FT/SEC. For velocity in FT/MIN., multiply by 60.

3524 East 4th Street
Hutchinson, KS 67504-1567
PH: (620) 662-6693
FAX: (620) 662-7586
www.superiorboiler.com

Shutdown and Cool-Down Procedure

When the unit is taken out of service, good care of the boiler during the idle periods is mandatory to prevent unnecessary corrosion damage.

1- Gradually reduce burner load to low fire position. When the unit is at the low fire position, blow down the boiler along with water column gage glass.
2- Follow burner manufacturer's recommendations for normal burner shutdown sequence.
3- Do not shut feed-water pumps.
4- To assist cool-down, use the Test/Run or Check/Run switch located on the programmer to run the blower.

Cooling rate must not exceed 100°F per hour to avoid drum distortion and resulting strains on tubes joints. You can monitor cooling rate by using one thermometer at front tubes-sheet located around the hand-hole and another one at steel surface of clean-out plug at rear of boiler.

5- The steam pressure should be allowed to drop naturally without opening vents or other means of taking steam from the unit to speed-up the lowering of steam pressure.
6- When steam pressure drops to 15 psig, the stop valve on the steam line should be closed and vent valve fully opened **to prevent a vacuum from forming within the boiler.**
7- When pressure gauge reading shows 0 psig, wait for one hour then check boiler water temperature, if it is around 200 deg. F then globe valve of 3-valve by-pass should be opened, make sure feed-water pumps are turned on and drain valves can be opened to maintain a water level in gauge glass at not less than mid level and not higher than 2/3 of visible gauge glass, water level can be maintain by throttling feed-water globe valve and slow-opening blow-down valve.
8- When steel doors and front tube-sheet around hand-holes are less than110 deg. F, then you can open front and rear doors.

WARNING: DO NOT attempt to drain boiler until temperature is less than 110 deg. F.

3524 East 4th Avenue
Hutchinson, KS 67501
PH: (620) 662-6693
FAX: (620) 662-7586
www.superiorboiler.com

CARE OF IDLE BOILERS

Boilers that are used on a seasonal basis that will be idle for a long period of time (in excess of thirty (30) days) should be laid up either under a dry or wet method during the periods of inactivity.

Boilers Laid Up Dry

In the event that the boiler could be subject to freezing temperatures or if it is to be idle for an excessive period of time, the following preparations should be made and carried out so that the boiler is not damaged over its period of inactivity.

1. Drain and clean the boiler thoroughly (both fire and water sides) and dry the boiler out.
2. Place lime or another water absorbing substance in open trays inside the boiler shell and close the unit up tight to exclude all moisture and air.
3. All allied equipment such as condensate tanks, pumps, etc., should be thoroughly drained.

Boilers Laid Up Wet

In order to protect the boiler during short periods of idleness, the boiler should be laid up wet in the following manner.

1. Fill the boiler to overflowing with hot water. The water should be approximately 120°F to help drive out the free oxygen. Add enough caustic soda to the hot water to maintain approximately three hundred fifty (350) parts per million of alkalinity and also add enough sodium sulphite to produce a residue of fifty (50) to sixty (60) parts per million of this chemical.
2. Check all boiler connections for leaks and take a weekly water sample to make sure that the alkalinity and sulphite are stable.

While cleaning a boiler in preparation to laying up the boiler, the water side of the unit should be cleaned and then the unit fired to drive off gases. The fire side should then be cleaned. An oil coating of fire side metal surfaces is beneficial when the boiler is not used for extended periods of time. This will prevent oxidization of the metal. Fuel oil lines should be drained and flushed of residual oil and refilled with distillate fuel. If all boilers are to be laid up, care of oil tanks, lines, pumps and heaters is similarly required.

3524 East 4th Avenue
Hutchinson, KS 67501
PH: (620) 662-6693
FAX: (620) 662-7586
www.superiorboiler.com

EXTENDED OUTDOOR STORAGE

If newly delivered boilers are to be stored for a long period, the following steps are required:

1. The boiler should be placed on cross-ties under the legs, preferably on a concrete or asphalt surface.

2. Make certain that all water has drained out of the shell and all piping (i.e.: water column, surface blowdown, bottom blowdown, etc.)

3. Plug all remaining open connections in the boiler shell and close all blowdown valves – bottom, water column and surface.

4. Remove the manway cover and place trays of silica gel desiccant on the uppermost row of tubes. The condition of the desiccant should be checked weekly and it should be replaced when it changes color.

5. The electrical enclosures and panels will also require silica gel in cloth bags to protect against condensation. These bags should also be checked weekly.

6. The entire boiler should be covered with a tarp with emphasis on protection for the gas train, oil pump, air compressor, low water cut-off and junction box.

SUPERIOR BOILER WORKS, INC. WILL NOT BE RESPONSIBLE FOR DAMAGE TO THE UNIT DURING THE STORAGE PERIOD IF THE ABOVE PROCEDURE IS NOT FOLLOWED.

Form: SBWBOS

3524 East 4th Avenue
Hutchinson, KS 67501
PH: (620) 662-6693
FAX: (620) 662-7586
www.superiorboiler.com

COLD BOILER STARTUP & OPERATION

FIRING THE BOILER - PRELIMINARY STEPS AND WARM-UP

Ensure that an accurate stack thermometer has been installed into stack coupling (50-500°F on Scotch Marine boilers 100 HP or larger and 150-750°F on smaller Scotch Marine and most Firebox boilers). Also an accurate Steam Pressure or Water Temperature gauge should be installed in their appropriate locations.

The fuel train should be checked and lined up for operation. Also check and line up the feedwater system for steam boilers and turn on the circulating pump(s) for water boilers.

On steam boilers check the water sight glass to verify the water level is at the Normal Water Level (NWL), approximately three (3) inches of visible water in the glass.

If the burner is equipped for gas-oil combination firing, move fuel selector switch to the appropriate position.

Move manual-automatic modulation selector switch to manual position and turn the manual potentiometer to the minimum or closed position. Move the burner control switch to the ON position to start the pre-purge cycle.

Once burner fan starts, immediately observe behavior of main gas valves. If valves begin to open during pre-purge, shut burner switch and circuit breaker off until wiring or control error is corrected. Assuming the gas valves remain in their normally closed position let the burner continue its pre-purge cycle. If the burner is of modulated construction, observe the behavior and stroke limits of all linkage, watch for binding or jerking of the linkage.

After the burner has completed its open damper pre-purge, it will return to the low fire position for the pilot ignition trial. Once the pilot trial begins, lock the programmer into its TEST mode, refer to the burner controller specs for location and operation of the TEST/RUN switch, and observe pilot flame characteristics from the furnace sight port. Place the TEST/RUN switch in the RUN position to complete pilot trial and continue to main flame trial.

3524 East 4th Avenue
Hutchinson, KS 67501
PH: (620) 662-6693
FAX: (620) 662-7586
www.superiorboiler.com

Once main flame has been established, visually check the flame and note its appearance. The flame should be relatively small to achieve a slow warm-up. The main issue is stable combustion and slow, even heating of the boiler to minimize structural stresses.

NOTE: On water boilers, you must have the system circulating pump(s) running to evenly warm the boiler and heating loop(s) to avoid thermal shock to the boiler.

FIRING THE BOILER - DETERMINING TEMPERATURE

Water boilers are warm enough for higher firing rates when the water temperature reaches **160°F** and the bottom of the front tubesheet is hot to the fingertips.

Steam boilers may be taken slowly toward high fire after the shell temperature has reached **220°F**, but the bottom of the front tubesheet should be checked before proceeding. A magnetic thermometer can be placed directly on the boiler shell at the cutout in the jacketing material where the data has been stamped into the vessel. On large diameter boilers (94" and up), it will be necessary to wait until the bottom is hot.

NOTE: STEAM BOILER VESSEL TEMP. SHOULD BE 220°F MINIMUM BEFORE SLOWLY INCREASING THE FIRING RATE.

Remain fully aware of water temperature and flow rate or steam pressure and water level while operating the boiler at higher capacities.

Raise the burner firing rate in small increments until the steam pressure or water temperature is at least up to 2/3 of the normal operating pressure or temperature before placing the firing rate MANUAL/AUTO selector switch in AUTO.

Your boiler is now ready for normal operation. Refer to your Maintenance Instructions that came with the boiler for daily, weekly, etc. maintenance procedures. For a new copy of these procedures please contact a Superior representative in your area or the Superior Customer Service Department at (620) 662-6693.

Form SBWCBSO 1/19/05

The Topog-E Gasket Company

Installation of Topog-E® gaskets in steam boilers

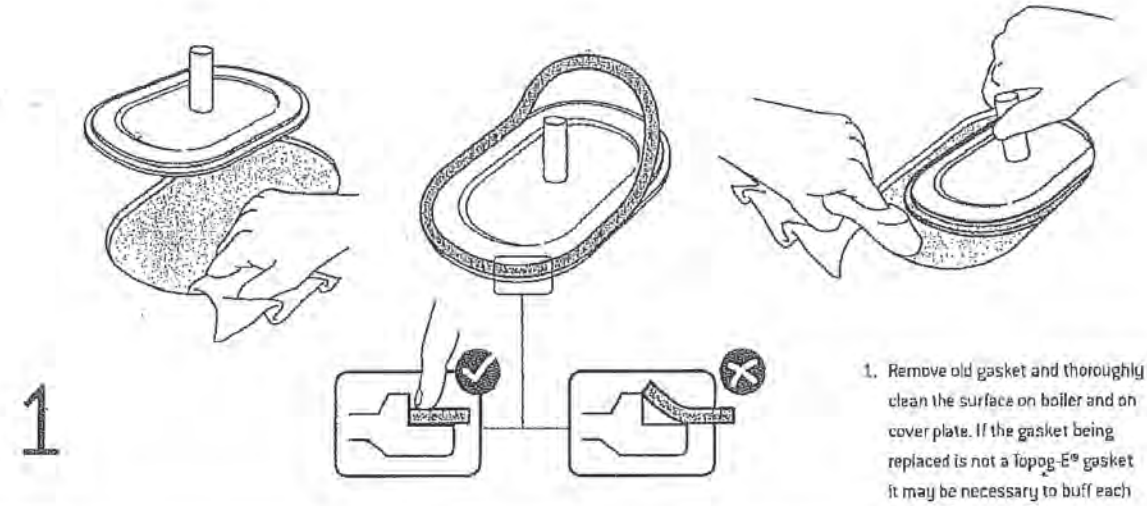

1

2

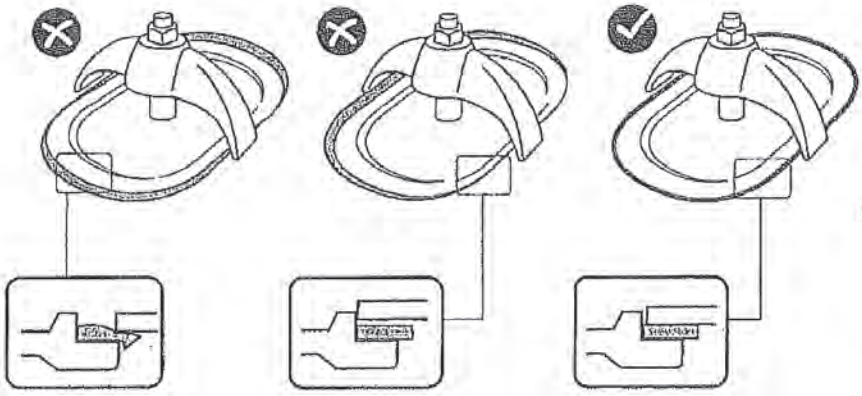

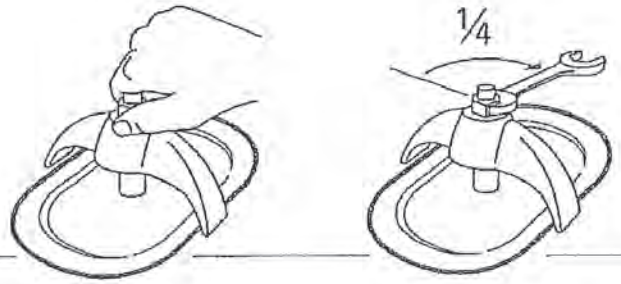

1. Remove old gasket and thoroughly clean the surface on boiler and on cover plate. If the gasket being replaced is not a Topog-E® gasket it may be necessary to buff each surface. Place new Topog-E® gasket on inspection cover plate, and make sure that the gasket is pushed down tight on the plate. Do not use any grease, lubricant or adhesive. When the cover plate is in the boiler and the gasket is in place, make one last cleaning swipe using a rag wrapped around your finger to ensure the mating surface in the boiler is clean.

2. Set crab, then center plate in opening and tighten nut enough to give a snug fit. Make it hand tight then increase pressure on the gasket with a quarter turn of wrench.

TOPOG-E
GASKET COMPANY
UNIQUE COMPOUND - RENOWNED PERFORMANCE

3

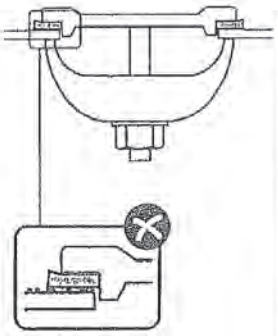

3. Gaskets on the bottom of a boiler shell are typically more difficult to install without leaking because small particles tend to become lodged between the mating surfaces after they have been cleaned. This can lead to over-tightening of the gasket to stop leakage. It is recommended to drain the boiler and start over or the gasket's service life may be shortened.

4

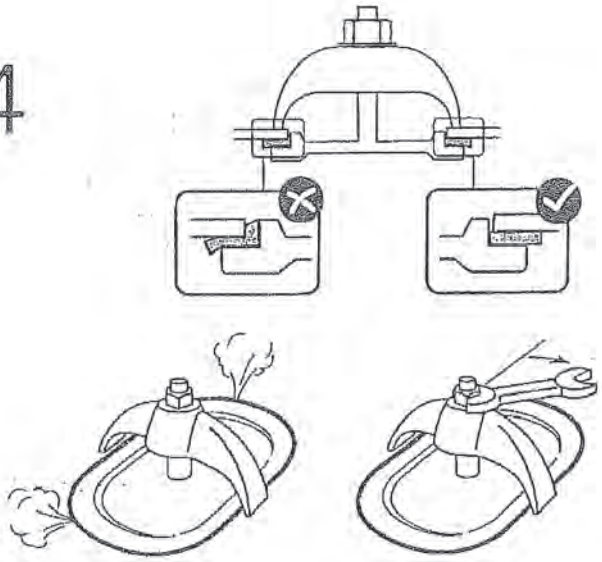

4. Do not over-tighten as it will over-compress the gasket and shorten its service life.

If gasket leaks while pressure is being built up, tighten only enough to stop leakage.

5. As pressure builds up to operating level in the boiler, the nut and crab will loosen as it typically takes several days for the gasket to reach its ultimate compression. It is important to keep the nut at least finger tight until it no longer loosens.

5

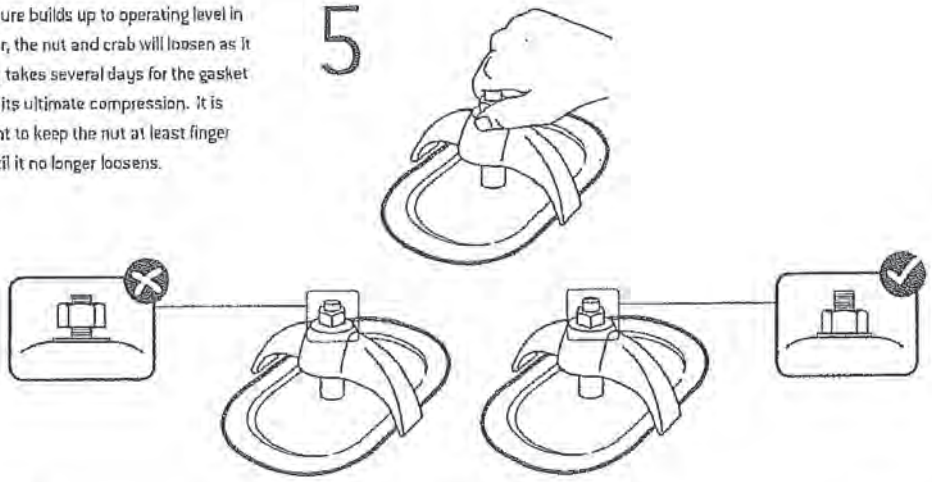

6. Never re-use a Topog-E® gasket!
7. Topog-E® bolt gaskets (when required) should be used with Topog-E® handhole gaskets.

Topog-E® gaskets are sold for use in steam, water, air, and other selected applications only. Recommendations for their use are based on tests believed to be reliable and on actual customer experience. Since their installation and use are beyond our control we cannot guarantee the results, whether or not such use is in accordance with instructions. We disclaim any responsibility.

© Copyright 2004 Topog-E® Gasket Company

TOPOG-E
GASKET COMPANY
UNIQUE COMPOUND · RENOWNED PERFORMANCE

1224 North Utica · Tulsa · Oklahoma 74110 · T: 918 587-6649 · F: 918 587-6961 · E: info@topog-e.com · W: www.topog-e.com

TOPOG-E GASKET

As a rough generalization it may be stated that the speed of a reaction doubles for each 10°C (18°F) rise in temperature. The pressure-temperature gradation is non-linear and this tubular presentation of steam (PSI) vs. temperature (°F) picks off four levels that are separated successively by 18°F increments, and relates these levels with survival terms for the gasket.

180 psi	380°F	1 year
225 psi	398°F	6 months
280 psi	416°F	3 months
335 PSI	432°F	1½ months

The Topog-E gasket material has specific and aggressive resistance to the hostile environment of live steam. If very low oxygen content is present in the steam, trouble rarely arises with a properly mounted Topog-E gasket inside the boiler.

From the exterior, however, the true difficulty arises. Here, we see an annulus of rubber beyond the cover plate. This rubber is exposed to the highly corrosive attack of an atmosphere that is 18% oxygen. The gas adjacent to the gasket is almost the temperature of the metal that is almost the temperature of the steam.

The situation is further complexed by the fact that rubber under stress degrades more rapidly than rubber not under stress. This may be verified by a rubber band in your desk drawer. Unperturbed, survival is measured in years. Stretched over a sheaf of papers - in months.

When stress is accompanied by extreme heat in the presence of oxygen, deteriorization of the rubber begins. These three agents, stress, heat, and oxygen prevent extended survival of a Topog-E gasket.

Any action that reduces the magnitude of one or more of these agents extends the service life of the gasket. Now, the heat varies with steam pressure, so it is immune to an action. Limiting the amount of oxygen that reaches the rubber is a possibility and work is being done now on impermeable barrier substrates.

The remaining element stress exists, and fortunately a good degree of adjustment is possible and available in proper mounting. The target is to never let the gasket witness a greater pressure than the steam pressure that it is to seal.

The gasket should be well centered on the opening and snubbed up with only enough pressure to hold it in place. Fire up the boiler. During the interval preceding steam pressure, the rubber is acting as a heat sink. As in all elastomeric vulcanizates it is undergoing stress-relazation. There is a reduction in modulus and a measurable change in resistance to compression deflection. Since the system is well within its elastic memory the system is unharmed. As heat mounts leakage will occur and further snubbing is necessary, but only to the extent of preventing serious leakage. The advent of steam will itself form the seal. The crab should be firmed and maintained firm since deactivating the boiler for night or weekend will create a negative pressure and interrupt the seal from within. Once the seal is broken it is difficult to reestablish.

Using this technique it is possible to exceed the charted terms by several magnitudes.

Low Water Cut-Offs – Mechanical
Combination Low Water Cut-Off/Pump Controllers for Steam Boilers

Series 194
Low Water Cut-Off/Pump Controllers

- For commercial, and industrial low or high pressure steam boilers
- Maintains consistent water level regardless of pressure
- For boilers of any steaming capacity
- Water column with integral tappings for gauge glass and tri-cock installations
- No. 5 Switch included
- Magnetic repulsion eliminates need for bellows
- Optional features
  – Manual reset
- 7B switch (135 ohm proportional signal) control to maintain constant boiler water level
- 1¼" NPT connections
- Maximum pressure 250 psi (17.6 kg/cm²)
- Ten bolt flange

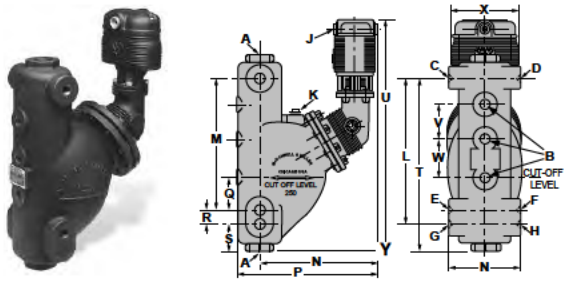

SERIES 194

Electrical Ratings
345 VA at 120 or 240 VAC

Ordering Information

Model Number	Part Number	Description	Weight lbs. (kg)
194	166600	Combination low water cut-off/ pump controller w/Series 5 switch	72.0 (32.7)
194-A	166700	194 w/alternate tappings	72.0 (32.7)
194-A-7B	167100	194-A w/Series 7B switch	72.0 (32.7)
194-M	166900	194 w/manual reset	72.0 (32.7)
194-7B	167200	194 w/Series 7B switch	72.0 (32.7)
194-7BM	167300	194-7B w/manual reset	72.0 (32.7)
194-B	166701	194 w/alternate tappings	72.0 (32.7

Dimensions, in. (mm)

Model	A NPT	B NPT	C NPT	D NPT	E NPT	F NPT	G NPT	H NPT	J NPT	K NPT
194	1¼	½	½	½	½	½	–	–	½	¾
194-A	1¼	½	½	½	–	–	½	½	½	¾
194-B	1¼	¾	¾	¾	–	–	¾	¾	½	¾

Model	L	M	N	P	Q	R	S
194	–	11⅝ (295)	6¾ (171.4)	13 1/16 (332)	2 13/16 (71)	1¼ (32)	2⅜ (60)
194-A	12⅞ (327)	–	6¾ (171.4)	13 1/16 (332)	2 13/16 (71)	1¼ (32)	2⅜ (60)
194-B	12⅞ (327)	–	6¾ (171.4)	13 1/16 (332)	2 13/16 (71)	1¼ (32)	2⅜ (60)

Model	T	U	V	W	X	Y
194	17¼ (438)	20½ (521)	3 (76)	3 (76)	6 (152)	10 13/16 (274)
194-A	17¼ (438)	20½ (521)	3 (76)	3 (76)	6 (152)	10 13/16 (274)
194-B	17¼ (438)	20½ (521)	3 (76)	3 (76)	6 (152)	10 13/16 (274)

ITT

McDonnell & Miller

Installation & Maintenance Instructions
MM-404(H)

Series 93/193 and Series 94/194

Low Water Cut-Off/Pump Controllers

For Steam Boilers and Level Control Applications

Typical Applications:

- Primary or secondary pump controller/ low water fuel cut-off for steam boilers
- Motorized valve controller
- Proportional valve controller
- Low water cut-off
- High water cut-off
- Alarm actuation

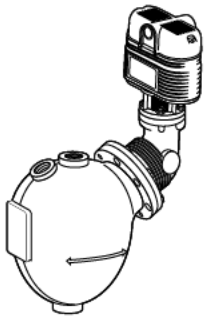

Series 93 or Series 94

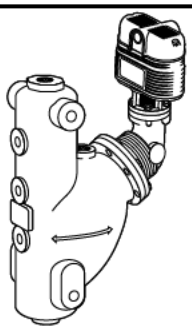

Series 193 or Series 194

⚠ WARNING



- Before using this product read and understand instructions.
- Save these instructions for future reference.
- All work must be performed by qualified personnel trained in the proper application, installation, and maintenance of plumbing, steam, and electrical equipment and/or systems in accordance with all applicable codes and ordinances.
- To prevent serious burns, the boiler must be cooled to 80˚F (27˚C) and the pressure must be 0 psi (0 bar) before servicing.
- To prevent electrical shock, turn off the electrical power before making electrical connections.
- This low water cut-off must be installed in series with all other limit and operating controls installed on the boiler. After installation, check for proper operation of all of the limit and operating controls, before leaving the site.
- We recommend that secondary (redundant) Low Water Cut-Off controls be installed on all steam boilers with heat input greater than 400,000 BTU/hour or operating above 15 psi of steam pressure. At least two controls should be connected in series with the burner control circuit to provide safety redundancy protection should the boiler experience a low-water condition. Moreover, at each annual outage, the low water cutoffs should be dismantled, inspected, cleaned, and checked for proper calibration and performance.
- To prevent serious personal injury from steam blow down, connect a drain pipe to the control opening to avoid exposure to steam discharge.
- To prevent a fire, do not exceed the switch contact rating.

Failure to follow this warning could cause property damage, personal injury or death.

Engineered for life

OPERATION

Maximum Pressure:
Series 93/193: 150 psi (10.5 kg/cm^2)
Series 94/194: 250 psi (17.6kg/cm^2)

Electrical Ratings

Models with 5 or 5-M Switch

Voltage	Pump and Burner Switch Contact Ratings Pilot Duty Only
120 VAC 240 VAC	345 VA

Models with 7B or 7B-M Switch

Switch Ratings		
Burner		Valve
120 VAC 240 VAC	345 VA	0 - 135 ohms @ 24 VAC

Switch Settings

Values are ± 1/8 " (3mm)

Models with 5 or 5-M Switches

Setting	Approximate Distance Above Cast Line In. (mm)	Differential In. (mm)
Pump Off	2 3/16 (56)	1 1/16 (27)
Pump On	1 1/8 (29)	
Burner On	1 3/8 (35)	1 3/8 (35)
Burner Off	0	

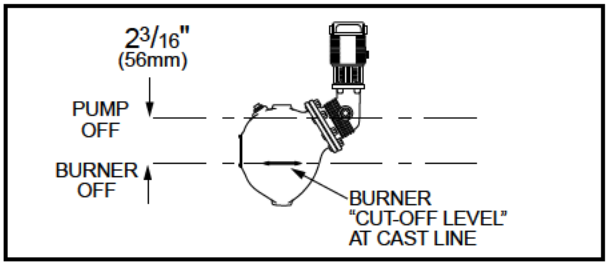

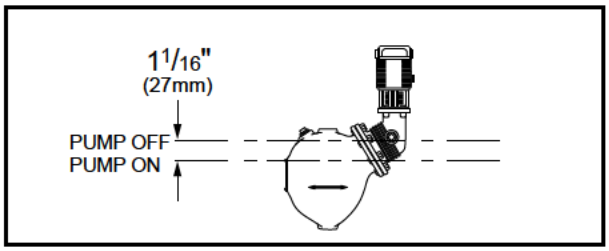

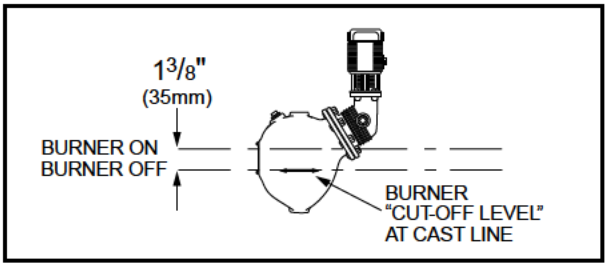

Models with 7B or 7B-M Switches

Setting	Approximate Distance Above Cast Line In. (mm)	Differential In. (mm)
Valve Full Closed	2 3/16 (56)	1 1/16 (27)
Valve Full Open	1 1/8 (29)	
Burner On	1 3/8 (35)	1 3/8 (35)
Burner Off	0	

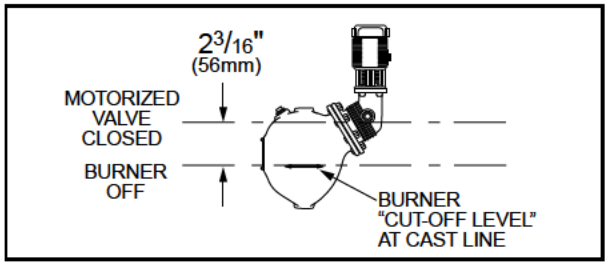

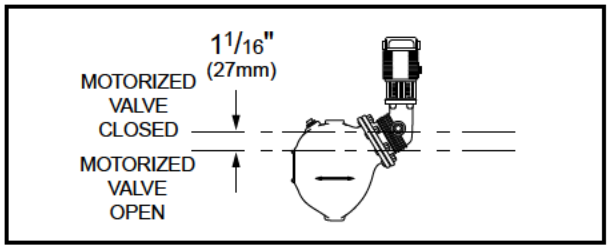

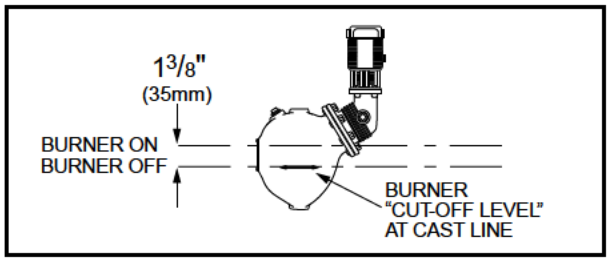

NOTE: Due to the slower operation of some motorized valves, complete valve opening or closing may occur at slightly different levels than indicated above.

INSTALLATION –

TOOLS NEEDED:
Two (2) pipe wrenches, one (1) flathead screw driver, and pipe thread dope.

IMPORTANT: Follow the boiler manufacturer's instructions along with all applicable codes and ordinances for piping, blow-down valve, water gauge glass, tri-cock and electrical requirements.

STEP 1 - Determine the Position of the Low Water Cut-Off/Pump Controller

If the control will be the primary low water fuel cut-off, size the steam (top) and water (bottom) equalizing pipe lengths so that the horizontal cast line on the body is **1 1/2" (38mm) below** the boiler's **normal** water level, **but not lower than the lowest safe permissible water level, as determined by the boiler manufacturer.**

OR

If the control will be the secondary low water fuel cut-off, size the steam (top) and water (bottom) equalizing pipe lengths so that the horizontal cast line on the body is **at or above the lowest safe permissible water level, as determined by the boiler manufacturer.**

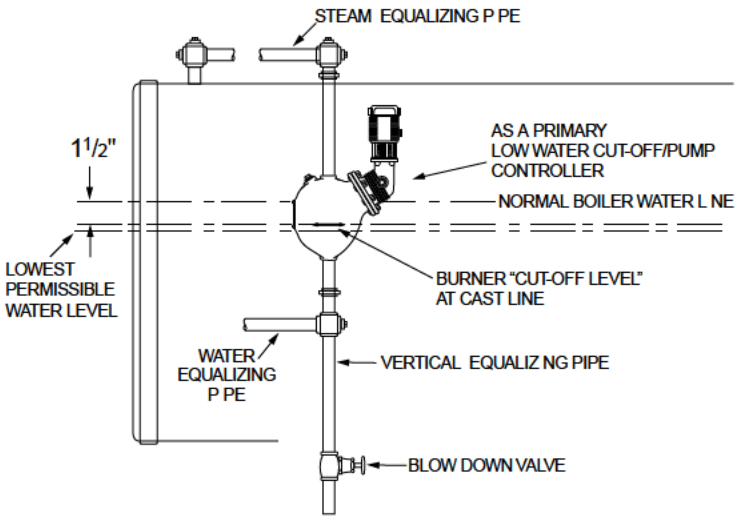

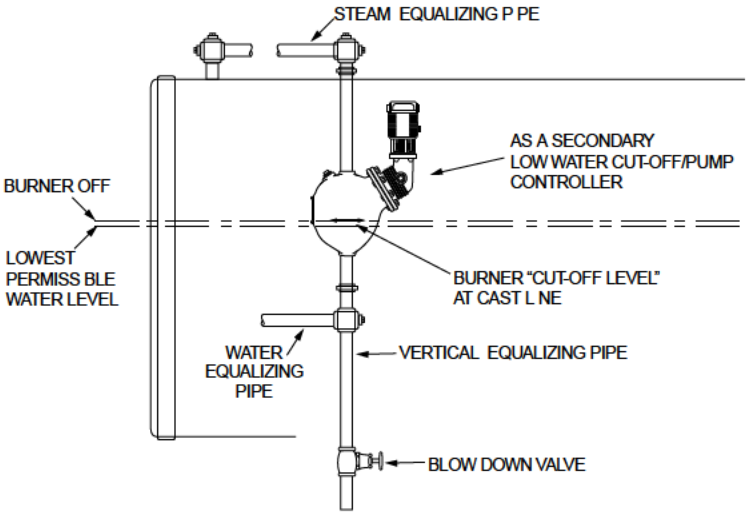

STEP 2 - Installing the Low Water Cut-Off/Pump Controller
For Series 93/193 or 94/194 (except 94-A, 193-D and 193-G Models)

a. Mount and pipe the control (**A**) on vertical equalizing pipes (**B**) at the required elevation as determined in Step 1.

Install a full-ported blow-down valve (**C**) directly below the lower cross.

NOTE:
1" (25mm) NPT tappings are provided on Series 93/193 controls.

1 1/4" (32mm) NPT tappings are provided for Series 94/194 controls and 193-B Model.

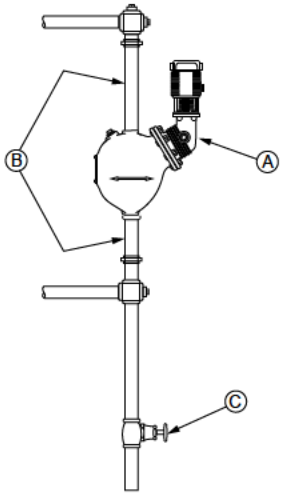

For 94-A and 193-G Models

a. Mount and pipe the control (**A**) with a vertical upper (**D**) and horizontal lower (**E**) equalizing piping at the required elevation as determined in Step 1.

Install a full-ported blow-down valve (**C**) on the lower body connection.

NOTE:
1 1/4" (32mm) NPT tappings are provided for 94-A Model control.

1" (25mm) NPT tappings are provided for 193-G Model control.

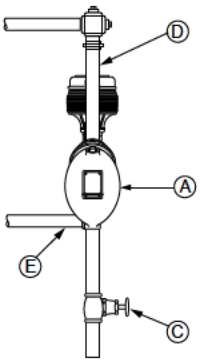

For 193-D Models

a. Mount and pipe the control (**A**) with a horizontal upper and lower (**G**) equalizing piping at the required elevation as determined in Step 1.

Install a full-ported blow-down valve (**C**) on the lower body connection.

NOTE:
1" (25mm) NPT tappings are provided for 193-D Model control.

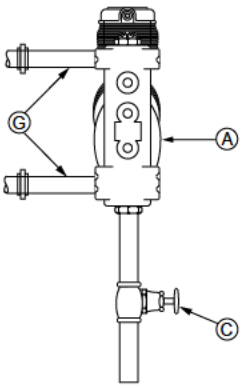

STEP 3 - Removing Float Blocking Plugs and Dowels

⚠ CAUTION

The plug and rod must be reinstalled before control is shipped installed on the boiler, and removed after boiler is placed and installed.

Failure to follow this caution may damage the float and operating mechanism.

a. Using a pipe wrench, remove the float blocking plugs (**I**) and dowels (**H**) from the control as shown below.

b. Using a pipe wrench, screw the pipe plugs provided with control into the open tappings.

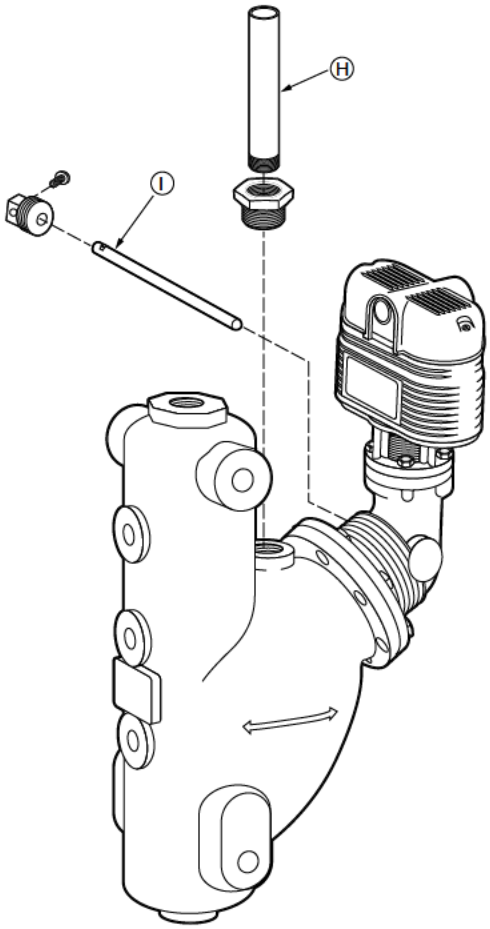

Series 193 / 194

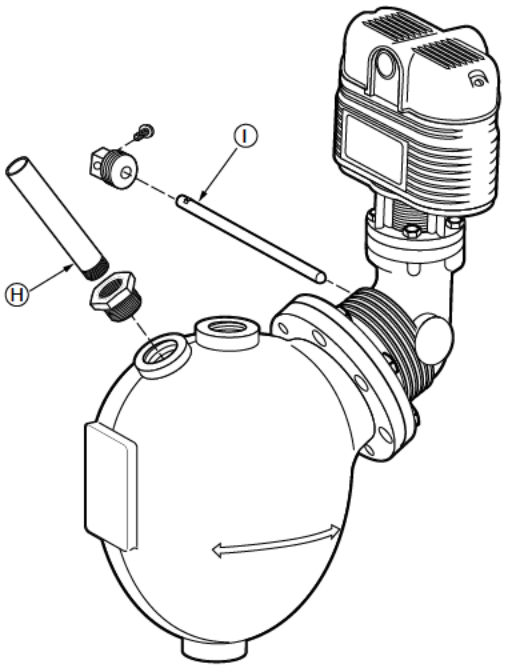

Series 93 / 94

STEP 4 - Installing a Water Gauge Glass and Tri-Cocks

NOTE: A separate water column for installation of gauge glass and tri-cocks may be required for boilers with a Series 93 or Series 94 control. Follow the manufacturer's instructions to install the water column.

a. Determine pipe size of tri-cock and sight glass tappings for the control being installed including center distance of sight glass tappings.

NOTE:
These items are not provided with control and must be purchased separately

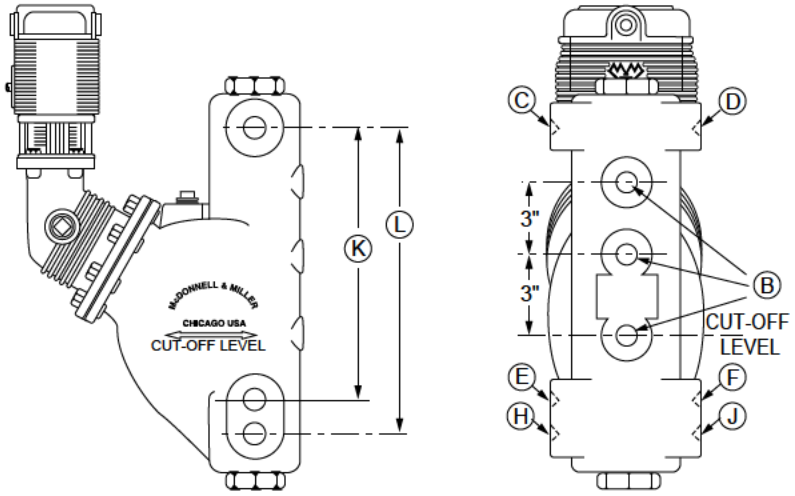

	Tri-Cock Tapping	Gauge Glass Tapping Pipe Size						Gauge Glass Tapping Center Distance	
Unit	B	C	D	E	F	H	J	K	L
193	½ (15)	½ (15)	½ (15)			½ (15)	½ (15)		12¾ (324)
193-A	½ (15)	½ (15)	½ (15)	½ (15)	½ (15)			11½ (292)	
193-B	¾ (20)	¾ (20)	¾ (20)			¾ (20)	¾ (20)		12¾ (324)
193-D	½ (15)		½ (15)		½ (15)			11½ (292)	
193-G	½ (15)		½ (15)		½ (15)			11½ (292)	
194	½ (15)	½ (15)	½ (15)	½ (15)	½ (15)			11⅝ (295)	
194-A	½ (15)	½ (15)	½ (15)			½ (15)	½ (15)		12⅞ (327)
194-B	¾ (20)	¾ (20)	¾ (20)			¾ (20)	¾ (20)		12⅞ (327)

b. Install tri-cocks and gauge glass following manufacturer's instructions.

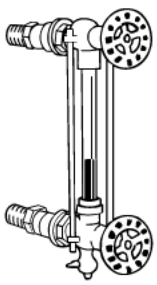

GAUGE GLASS
(TYPICAL)

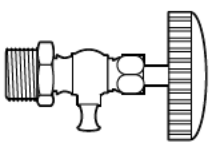

TRI-COCK
(TYPICAL)

STEP 5 - Electrical Wiring

⚠ WARNING

- **To prevent electrical shock, turn off the electrical power before making electrical connections.**
- **This low water cut-off must be installed in series with all other limit and operating controls installed on the boiler. After installation, check for proper operation of all of the limit and operating controls, before leaving the site.**

Failure to follow this warning could cause electrical shock, an explosion and/or a fire, which could result in property damage, personal injury or death.

Wiring Diagrams

NOTE: The following diagrams are provided for reference only. If available, manufacturer's wiring diagrams should always be followed to connect the device being operated.

Switch Operation
For Series 93/193 or 94/194 with 5 or 5-M Switch

Red switch terminals 1 and 2 are for burner circuit contacts, terminals 3 and 4 are for the low level alarm circuit contacts.

Blue switch terminals 3 and 4 are for feeder/pump control contacts, terminals 1 and 2 are for high level alarm circuit contacts.

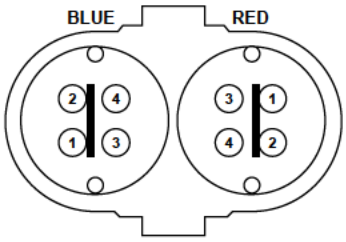

BOILER FEED PUMP OFF–
BURNER ON–ALARM OFF

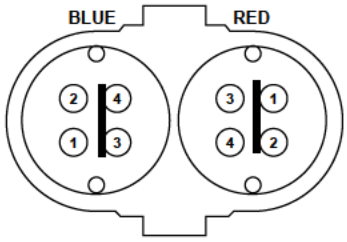

BOILER FEED PUMP ON–
BURNER ON–ALARM OFF

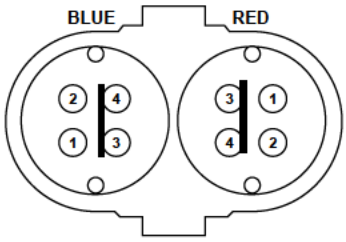

BOILER FEED PUMP ON–
BURNER OFF–ALARM ON

Pump Control, Low Water Cut-Off and Alarm

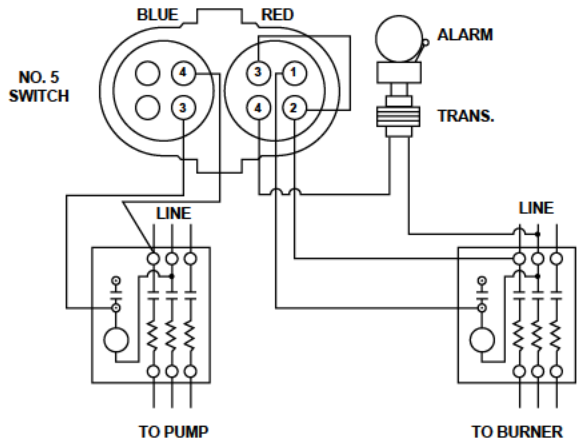

Low Water Cut-Off Only

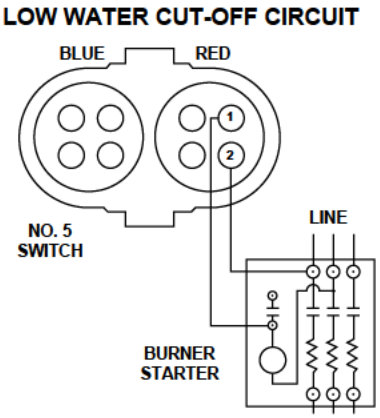

Pump Control Only

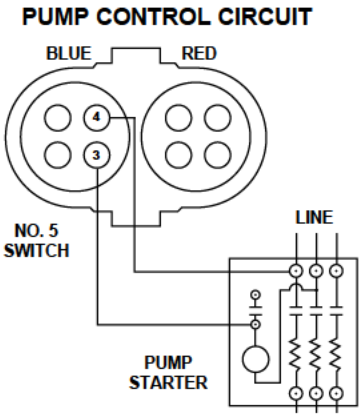

Low Water Alarm Only

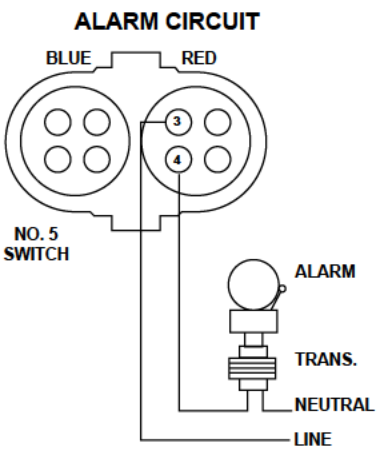

For Series 93/193 or 94/194 with 7B or 7B-M

Red terminals 1 and 2 are the burner circuit contacts, terminals 3 and 4 are the low level alarm circuit contacts.

Blue terminal 3 is the common contact, terminals 1 and 4 are the output contacts.

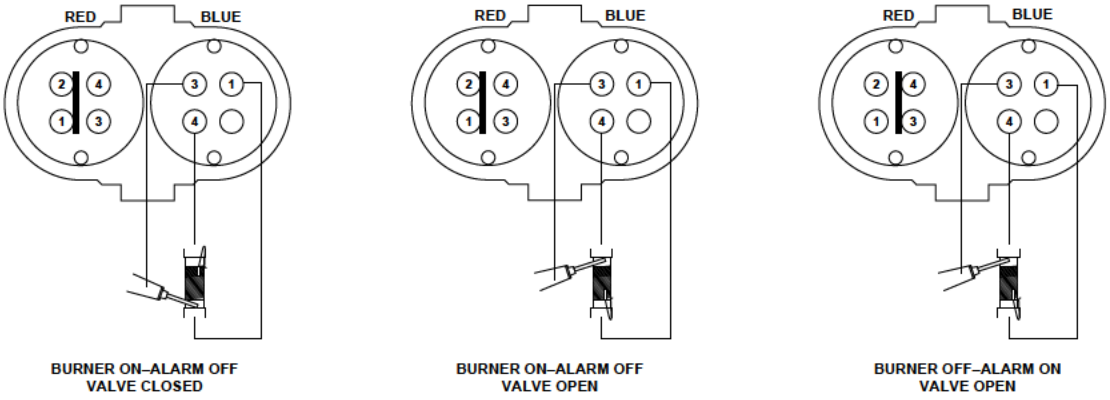

NOTE: The 7B switch is a 135 ohm potentiometer slide wire control for use with an electric valve operator with the same rating.

Proportional Control, Low Water Cut-Off and Alarm

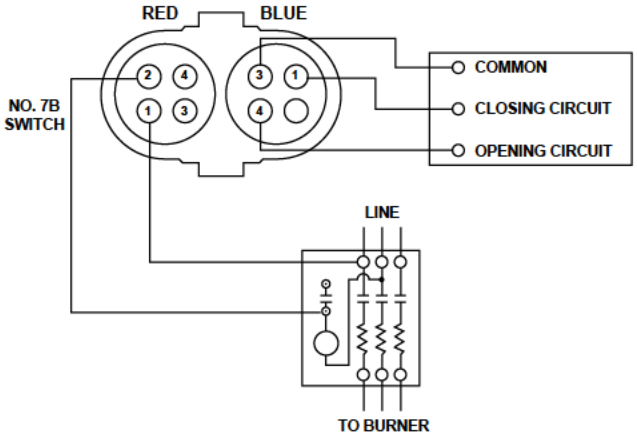

Wiring Connections

a. Remove two screws (**A**) and lift off switch cover.

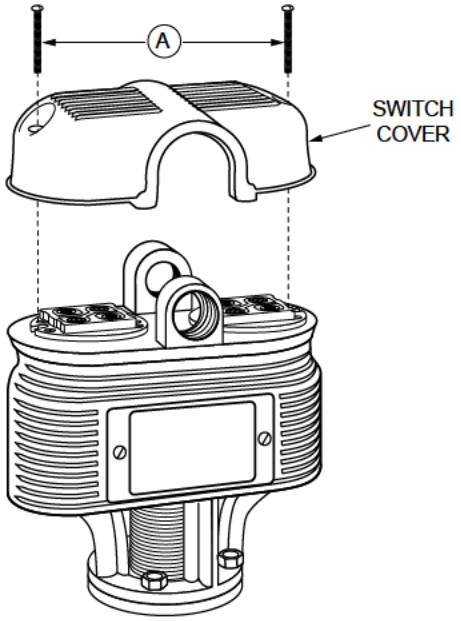

b. Connect BX armored cable or Thinwall electrical metal tubing to the integral fitting hub. Connect wires to terminals following appropriate wiring diagram from pages 8 and 9 for your application.

NOTE: Follow local codes and standards when selecting the types of electrical fittings and conduit to connect to control.

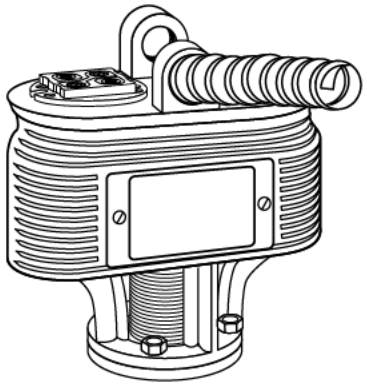

c. Replace switch cover and fasten with two screws (**A**).

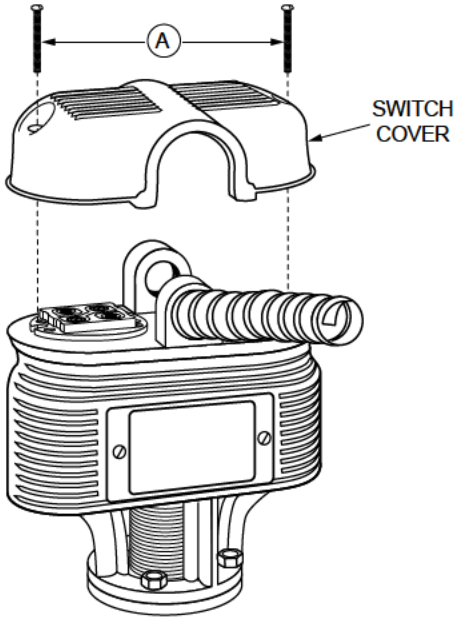

STEP 6 - Testing

– Dimensions shown are typical.
– The following testing procedure is only meant to serve as a verification of proper operating sequence.

a. Turn on power to boiler and pump circuits.
With the boiler empty, the pump should turn on (5 or 5-M switch models) or the valve open (7B or 7B-M switch models). The burner should remain off and boiler should begin to fill with water.

CAUTION
Immediately turn off all power if the burner turns on with no water in the gauge glass. Investigate further before continuing procedure.

b. For Automatic Reset Models
When water level in the gauge glass is approximately 1 3/8" (35mm) above the horizontal cast line, the burner should turn on.

For Manual Reset Models
When water level in the gauge glass is approximately 1 3/8" (35mm) above the horizontal cast line, press the manual reset button and the burner should turn on.

c. For 5 or 5-M Switch Models
When water level in the gauge glass is approximately 2 3/16" (56mm) above the horizontal cast line, the pump should turn off.

For 7B or 7B-M Switch Models
When water level in the gauge glass is approximately 2 3/16" (56mm) above the horizontal cast line, the valve should be closed.

CAUTION
If pump does not turn off or valve close, turn off water supply to boiler. Investigate further before continuing procedure.

d. With the water in the boiler at its normal level and burner on, SLOWLY open the blow-down valve until it is fully open. As the water level in the gauge glass begins to drop, verify that the following occurs.
For 5 or 5-M Switch Models
When water level drops to approximately 1 1/8" (29mm) above the horizontal cast line, the pump should turn on. When water level drops to the hori zontal cast line, the burner should turn off.

For 7B or 7B-M Switch Models
As the water level drops, the valve should begin to open. When the water level drops to approximately 1 1/8" (29mm) above the horizontal cast line, the valve should be full open.
When the water level drops to the horizontal cast line, the burner should turn off.

e. Close the blow-down valve after burner turns off and restore water level to normal operating level.

f. Repeat testing procedure several times to ensure proper operation of control.

g. After testing and verification of control operation, the boiler can be returned to service.

TROUBLESHOOTING

Erratic operation of the control is the most common symptom that occurs. Erratic operation can be defined as pump and/or burner switches not switching at proper levels. Refer to the following list of items to check if the control is not operating properly.

1. **Float Ball is Crushed**
Crushed floats are typically caused by improper blow-down. Drain piping from blow-down valve to drain should be checked for proper pitch and the blow-down procedure followed when blowing down the control. Purchase and install a new float ball after investigating and correcting the problem.
2. **Float Ball is Filled with Water**
The seam weld on the float can sometimes deteriorate. This can be caused by the type of chemical treatment used in the boiler. While this is a rare occurrence, the chemical treatment supplier should be consulted to determine if a reaction could occur. Purchase and install a new float ball after investigating and correcting the problem.
3. **Float Arm Springs are Bent**
The pivot springs located on either side of the float rod should be flat and straight. If they become bent, the usual cause is mishandling of the unit during installation or improper blow-down. The control should never be picked up by the float ball or allowed to hang from the bowl by the float. Drain piping from blow-down valve to drain should be checked for proper pitch and the blow-down procedure followed when blowing down control. Purchase and install new control or head mechanism after investigating and correcting the problem.
4. **Switch Contact Springs Broken**
The contact springs can break if the electrical rating is exceeded. Purchase and install new switch assembly or head mechanism after investigating and correcting the problem.
5. **Switch Contact Springs Misaligned**
Misalignment of the contact arms is usually associated with damage to the control during shipment or installation. Purchase and install new switch assembly or head mechanism after investigating and correcting the problem.
6. **Internal (Wetted) Parts Dirty**
The internal parts can operate improperly if dirt, scale or rust is allowed to build. This condition can be a result of not blowing down the control as recommended and/or improper boiler water chemical treatment. Purchase and install new control or head mechanism after investigating and correcting the problem.

MAINTENANCE

SCHEDULE:

Blow down control as follows when boiler is in operation.

- **Daily if operating pressure is above 15 psi.**
- **Weekly if operating pressure is below 15 psi.**

NOTE
More frequent blow-down may be necessary due to dirty boiler water and/or local codes.

- **Remove head assembly and inspect water side components annually.** Replace head assembly if any of the internal components are worn, corroded or damaged or if control no longer operates properly.
- **Inspect the float chamber and equalizing piping annually.** Remove all sediment and debris.

NOTE
The control may need to be inspected and cleaned more frequently on systems where there is the potential of excessive scale or sludge build-up. This includes systems: **• With high raw water make-up** **• With no condensate return** **• With untreated boiler water** **• Where significant changes have been made to the boiler-water chemical treatment process** **• With oil in the boiler water**

Replace head mechanism every 5 years.
More frequent replacement may be required when severe conditions exist.
Replacement parts are available from your local authorized McDonnell & Miller Distributor.
The use of parts or components other than those manufactured by McDonnell & Miller will void all warranties and may affect the units compliance with listings or regulating agencies.

BLOW DOWN PROCEDURE:

⚠ CAUTION
 **To prevent serious personal injury from steam pipe blow down, connect a drain pipe to the control opening to avoid exposure to steam discharge.** **Failure to follow this caution could cause personal injury.**

When blowing down a control at pressure, the blow down valves should be opened slowly. The piping needs to be warmed up and stagnant water in the drain piping needs to be pushed out. Suddenly opening a blow down valve causes steam to condense, which creates water hammer. Damage to components can occur when water hammer occurs due to improper blow down piping.
For these reasons, McDonnell & Miller recommends a dual valve blow-down system for each control.
Blow down the control when the water in the boiler is at its normal level and the burner is on.
NOTE: Refer to page 2 for switch operating points.

- Open upper valve (#1)
- Slowly open the lower valve (#2)
- Water in the sight glass should lower.
- As the water in the sight glass lowers, the pump should turn on.
- As the water continues to lower in the sight glass, the burner should turn off.
- Slowly close the lower valve (#2).
- Close the upper valve (#1)
- The water level in the sight glass should rise, first turning on the burner and then turning off the pump.

NOTE: On manual reset models, the reset button will need to be pressed after the water level has been restored before the burner will operate.

NOTE
If this sequence of operation does not occur as described, immediately close all the valves, turn off the boiler and correct the problem. Inspection/cleaning of the float mechanism may be required to determine why the control was not working properly. Retest the control after the problem has been identified and corrected.

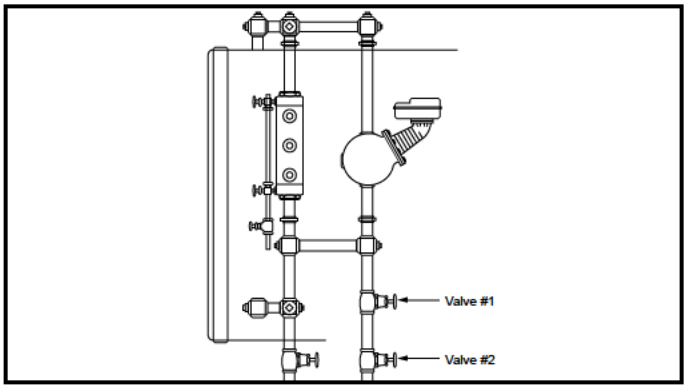

ITT
8200 N. Austin Ave.
Morton Grove, IL 60053
tel: 847-966-3700
fax: 847-966-9052
www.mcdonnellmiller.com

©2008 ITT Corporation
Printed in U.S.A. 12-08 246043

Form 266
Bulletin P/N 100204-2
Rev. J

Warrick® Series 26NM Control
Installation and Operation Bulletin

This bulletin should be used by experienced personnel as a guide to the installation of the Series 26NM Control. Selection or installation of equipment should always be accompanied by competent technical assistance. We encourage you to contact Gems Sensors or a representative if further information is required.

Specifications

Control Design: Solid-state components enclosed in a clear Lexan plug-in style housing. Not NEMA Rated.

Contact Design: 1 SPDT (1 form A), N.O. Non powered contacts.

Contact Ratings: 10A @120/240-VAC resistive (120°F), 1A @120/240VAC resistive (150°F), 1/3 Hp @ 120/240-VAC (120°F).

Contact Life: Mechanical -5 million operations Electrical - 100,000 operations minimum at rated load

Supply Voltage: Factory Configured: 24V, 120V, 220V, or 240V AC +10%/-15% of nominal, 50/60 Hz. Factory Configured: 208V/240V Model: 187V Min to 242V Max, VAC 50/60 Hz

Power Consumption: 24/120/220/240-VAC with relay energized ~ 4.4 VA.

Secondary Circuit: 2.3 VAC RMS voltage on probes, < 1 milliampere source capability.

Sensitivity: Factory programmed to 4.7K, 10K, 26K, 50K, or 100K Ohms

Operating Ambient Temperature Range: -40°F to +150°F (-40°C to +65°C)

Terminals: All connections made with screw-clamp terminals.

Time Delays: Standard LLCO, 0.5 sec. on rising level, 3 sec. on falling level. Optional 0-90 sec. time delays in 1-sec. increments for rising and falling.

Listings: Control carries U.L. Limit Control Listing (UL-353) for 24VAC and 120VAC Line Powered units only (220VAC, 240VAC, 208/240VAC units not rated).

Installation

1. Install octal socket in appropriate enclosure using two #6 or #8 screws.
2. Install rail mount socket on appropriate rail (DIN mount) in appropriate enclosure if applicable.
3. Wire control per wiring diagram following N.E.C and local codes.
4. Install control module in socket

Sensitivity vs. Maximum Probe Wire Distance*

SENSITIVITY CHARACTER	SENSITIVITY (K-OHMS)	Distance (FT)
A	4.7	900
B	10	600
C	26	250
D	50	100
E	100	50

* Based on type MTW or THHN wire, #14 or #16 AWG

Dimensional Drawing

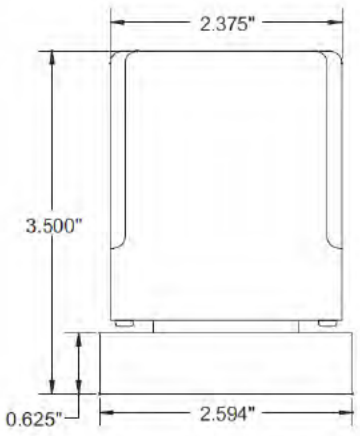

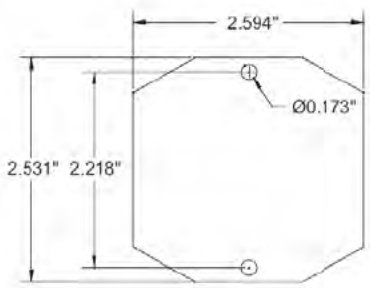

Mount the octal socket (base) on rigid vertical or horizontal surface using #6 or #8 screws. The control should be mounted within an enclosure of proper NEMA integrity.

Torque all terminals and socket mounting screws to 7 in-lb max.

Wiring Diagram

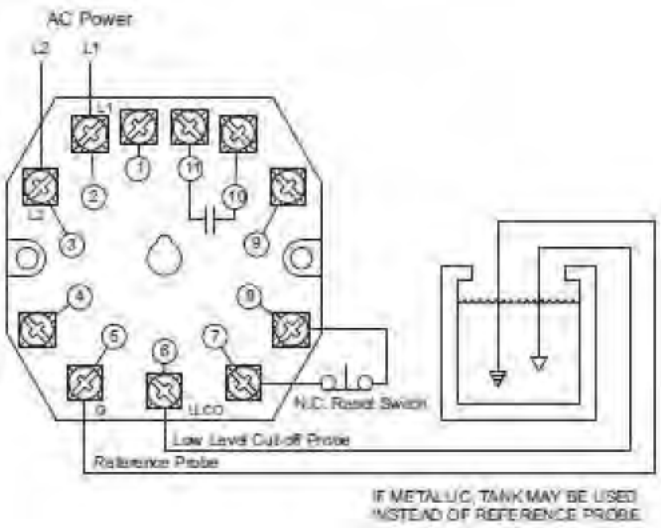

Operation

AUTOMATIC RESET (Reset Switch terminals not wired) When the liquid rises to the electrode on terminal LLCO, the control energizes, changing state of the load contacts. (LED will be lit) The control remains energized until the liquid level recedes below electrode on terminal LLCO. The control then de-energizes, (LED will not be lit) returning load contacts to original state. Unless otherwise specified, there is a three second time delay on decreasing level. Liquid must be below probe on terminal LLCO for a full three seconds before control de-energizes.

MANUAL RESET (Normally closed pushbutton installed across reset terminals) When the liquid rises to the electrode on terminal LLCO, the control will remain de-energized until the pushbutton is depressed. Upon Reset Switch activation, the control will energize, (LED will be lit) changing the state of the contacts. The control remains energized until the liquid level recedes below electrode on terminal LLCO. The control then de-energizes, (LED will not be lit) returning load contacts to their original state. Unless otherwise specified, there is a three second time delay on decreasing level. Liquid must be below probe on terminal LLCO for full three seconds before control de-energizes. **Operator to wait 5 full seconds after power is applied before pressing reset switch (if manual reset is used).**

MANUAL RESET OPTIONAL POWER OUTAGE FEATURE (Normally closed pushbutton across reset terminals) Control will auto-recover from a power loss. With liquid present on LLCO electrode at a power outage event, the control will de-energize and will automatically re-energize upon return of power with liquid present on the probe at power-up. However, if loss of liquid is sensed on power-up, the control will remain de-energized until liquid again rises to electrode and pushbutton is depressed. The control will not attempt to auto-recover from a power outage if no liquid was present on the probe at power loss.

TEST FEATURE

Allows LLCO circuit to be tested without the need to drop the water level in the boiler to create a dry probe condition. Holding down the reset button for 3 seconds will allow the LLCO circuit to trip, simulating a dry probe. The controller will return to normal operation once the reset button is pressed a second time.

LED STATUS INDICATOR In normal operation, the LED on the control will either be on or off depending on the controller state. On-board microprocessors continuously monitor for fault conditions. In the event a fault is detected, the LED will blink a pattern indicating the fault type. If you experience an inoperable control and the LED is blinking, attempt to leave the control in the blinking state and contact the factory for assistance.

26NMXXXXX-XX-XX

- **Time Delay Increasing Level:** 0-90 seconds, Blank = 0 seconds.
- **Time Delay Decreasing Level:** 0-90 seconds, Blank = 3 seconds.
- **Optional Character:** see Chart
- **Enclosure:** 0-None, 1-NEMA 1, 2-NEMA 4
- Socket Style: A-11 Pin Octal, B-Din Mount, M-NONE, Module Only
- **Supply Voltage:** 1-120VAC (+10%/-15%), 2-240VAC (+10%/-15%), 3-24VAC (+10%/-15%), 5-220VAC (+10%/-15%), 8-208/240VAC (187 to 242 VAC absolute Range)
- **Mode/Sensitivity:** A-4.7K, B-10K, C-26K, D-50K, E-100K

	N.C. Pushbutton	Power Outage	Test Feature
A	X	X	X
B			X
C	X		
E		X	
F	X	X	
Y	X		X
Z		X	X
0	No Option		

Warrick® Series 3C and 3K Electrode Fittings

Installation and Operation Bulletin

Each Series 3C and 3K water column electrode fitting is combined with one or more on/off conductance actuated liquid level controls on steam boilers or other pieces of equipment with a side chamber to provide one the following:

(a) On/off pump operation (b) Low water cutoff or alarm
(c) High level cutoff or alarm (d) A combination of a, b, and c

See literature provided with control for information concerning installation of that particular component.

The electrode lengths of the Series 3C and 3K are measured in inches and referenced to that surface common to the bottom of the blue terminal housing and top of the cast metal chamber. The electrode lengths are listed on the side of the blue terminal housing. **It is suggested that you check all electrode lengths before installation of the fitting on the boiler or tank to verify that the control functions will occur at the desired water levels.** This is easily accomplished by working through the drainpipe tapping in the bottom of the chamber. Measure the distance from the extreme lower end of the chamber to each electrode tip. Electrode lengths, referenced as mentioned above, may then be computed by subtracting each of those measurements from **7-3/8 inches for Series 3C** and from **16-1/8 inches for Series 3K** fitting.

After the fitting has been installed on the boiler, the blue terminal housing can be oriented in the most favorable of several positions, each 90° apart, for the purpose of receiving electrical conduit from the control box. To reorient the housing, simply remove the lid on the top of the housing, reposition the housing, and replace the screws. For high temperature applications, utilize wire with an oil resistance insulation rated at not less than 600 volts and 200° C (392°F). Teflon or silicone rubber insulated wire with those ratings is common and available from electrical supply houses.

CAUTION: Do not employ asbestos insulated wire. That material is hydroscopic (readily absorbs moisture) and is unsuitable for the application.

If the fitting chamber is to be used as the ground/reference, the ground/reference conductor is to be terminated in the housing by securing it beneath the head of the hex head screw provided for Grounding. (#10-32)

Common Specifications

Temperature/Pressure Limits:	250 psig, 406° F, Saturated Steam
Listings:	U/L Guide MBPR File MP 1430 & Guide MCUR2 File MP 2489.
	CSA Guide 184-N-13,90 File 11644
Terminal Housing:	Diecast aluminium with epoxy coat.
	1/2”-14 NPT tapped boss for conduit.

3C Specifications

Attachment to Vessel:	1”-11 ½ NPT tappings for equalizer piping.
Blowdown:	1-11 ½ NPT
Electrodes:	Length not less than 1½ inches or greater than 6 inches
Chamber Material:	Cast Iron or Red Brass

3K Specifications

Attachment to Vessel, Gauge Glass and Tricock Connection: *(See ordering information)*

Blowdown:	1-11 ½ NPT
Electrodes:	Length not less than 1-3/4 inches or greater than 13 inches
Chamber Material:	Cast Iron

Ordering Information

3K X X X X (Character assigned by Factory)

Electrode Lengths: inches
Length # 1 _____ Length # 2 _____
Length # 3 _____ Length # 4 _____

Size of Gauge & Equalizer Tappings:

	Gauge	Equalizer
1-	None	1"/ 11-1/2
2-	None	1-1/4"/ 11- 1/2
3-	1/2"-14	1"/ 11-1/2
4-	1/2"-14	1-1/4"/ 11- 1/2
5-	3/4"-14	1"/ 11-1/2
6-	3/4"-14	1-1/4"/ 11- 1/2

Size and Location of Tricock Tappings:

	NPT	*Location
A-	None	None
B-	1/2"-14	Left
C-	3/4"-14	Left
D-	1/2"-14	Right
E-	3/4"-14	Right

* Viewer facing gauge glass

Number of Electrodes:
1- One, 2- Two, 3- Three, 4- Four

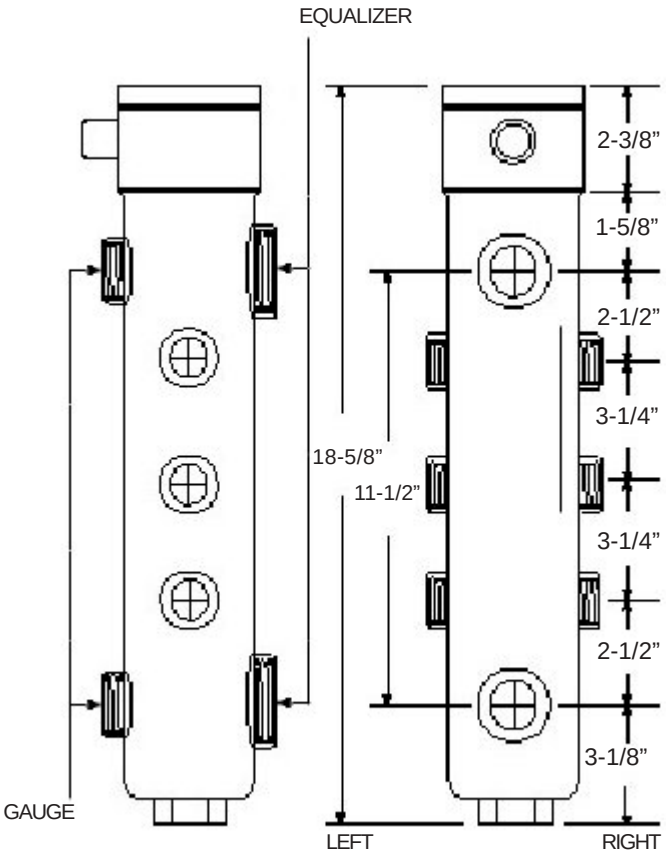

Ordering Information

3C X X X (Character assigned by Factory)

Electrode Lengths: inches
Length # 1 _____ Length # 2 _____
Length # 3 _____ Length # 4 _____

Chamber Material: A- Cast Iron, B- Red Brass

Number of Electrodes: 1- One, 2- Two, 3- Three, 4- Four

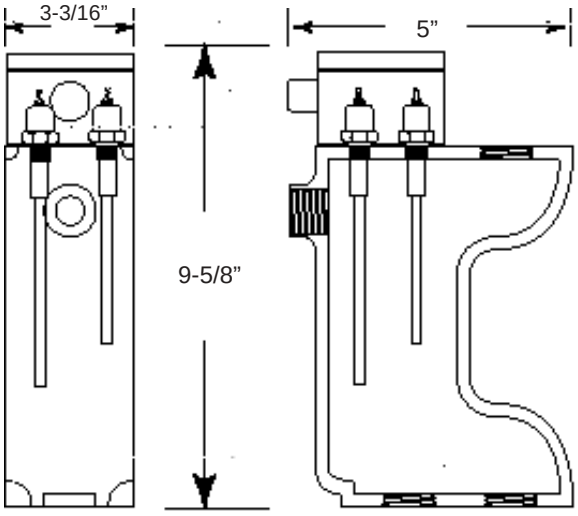

Gems Sensors Inc.
One Cowles Road
Plainville, CT 06062-1198
Tel: 860-793-4579
Fax: 860-793-4580

FLOWSERVE

Worcester Controls

PB 401-32

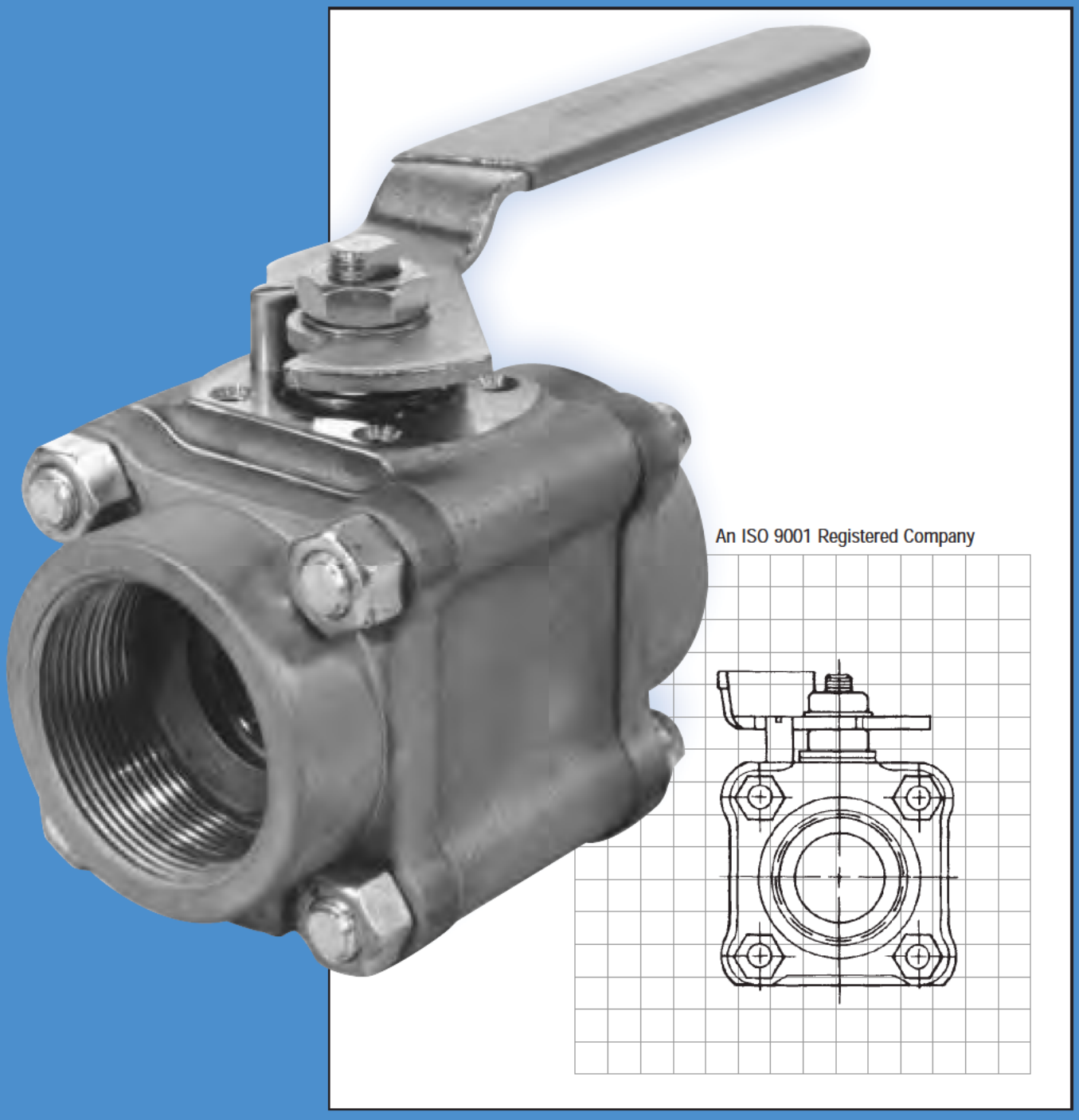

An ISO 9001 Registered Company

Series 44 Ball Valves

3-piece ball valves designed to meet all requirements of ANSI B16.34

THE NEW SERIES 44:

A quantum advance in ball valve durability, cycle life, leak tightness and automation.

Worcester's Series 44 three-piece ball valves, for many years the most respected ball valve design in the industry, are now better than ever. A major research, design, and testing program brings you a new valve, designed to ANSI B16.34 specifications with advanced seal technology and body mount bracket design. This means a very strong, tough valve that can handle pressure and unforseen piping strains with a stem seal that extends operational cycle life and a standardized overall design that keeps parts inventory to a minimum. Then there's documentation. B16.34 means complete traceability of assembly and testing procedures, heat codes, and foundry identification. Full CMTRS (Certified Material Test Reports) on pressure vessel parts are optionally available. Valve identification is provided on a stainless steel nameplate meeting MSS SP-25.

High Performance

An improved stem seal design, consisting of live-loaded PEEK and Polyfill® thrust bearings and seals, significantly increases valve cycle life over conventional ball valves and extends time between adjustments. In manual valves, the two spring washers are compressed by two retaining nuts. A single Nylon-insert locking nut and four spring washers are used on automated valves.

Body Mounted Actuator Design

Actuators for Worcester's Series 44 three-piece valves are mounted on rigid, precisely machined, box-style brackets bolted to the valve center section. This brings a number of advantages to the valve user:

- Actuator loads are on the valve body;
- Actuators and brackets can be removed for service without affecting valve or piping integrity;
- Easy access for stem seal adjustment;
- Inventory simplification. Mounting brackets are common to three-piece and equivalent flanged valves.

STEM SEALS

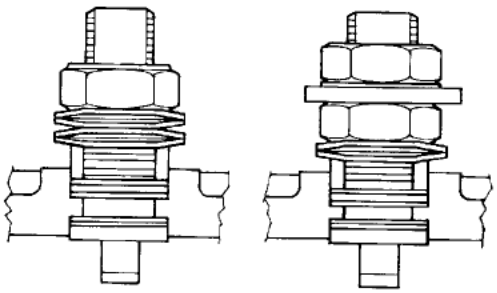

Automated Valve Manual Valve



1¼"–2" ¼"–1"

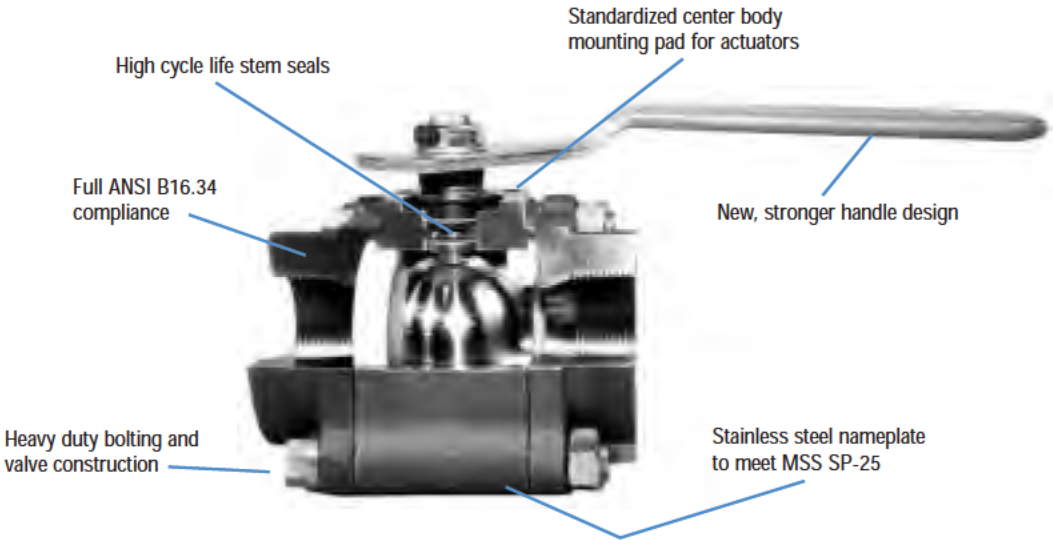

MULTIPLE END CONNECTIONS, SEAT AND SEAL COMBINATIONS

Available through a nationwide network of distributors, Series 44 quarter-turn ball valves and replacement parts are stocked and ready to be adapted to each individual application.

Features which make this tough, reliable ball valve so unique include tight shut-off, smooth two-way flow, advanced seat materials, a variety of interchangeable end connections, swing away three-piece construction, and a design ready for automation.

A variety of pipe ends, including socket weld, screw ends, butt weld or any combination of these, enables Series 44 valves to be adapted to fit standard and more unusual piping situations. **Series 44 (V67) valves can also be welded in place, fully assembled with "G" graphite-coated 316 stainless steel body seals and reinforced TFE, Polyfill, or High-per Fill® seats.**

The range of Worcester's seat materials is unmatched and includes Buna, Neoprene, TFE, Reinforced TFE, Polyfill, Lubetal™, High-per Fill and UHMWPE. These seats easily handle a great majority of industrial fluids with temperatures from -50°F to +600°F including steam, chemicals, petrochemicals, petroleum products, caustics and fluids containing solids, fibrous or abrasive materials.





SWING-OUT DESIGN FOR EASY MAINTENANCE

The Series 44 is especially well suited for use in piping systems where line breaks are required and total entry into the line is necessary. The center section can swing out, eliminating the need to cut a valve out of line and having to replace both the valve and the pipe. Because of this design, the seats, seals and ball can all be replaced quickly and easily without disturbing pipe alignment. Acting as both a valve and a union, the Series 44 eliminates the need for a separate union.



TIGHT SHUTOFF AND BI-DIRECTIONAL SEALING

Worcester's three-piece ball valves are designed to seal bi-directionally against resilient seats. Patented relief slots assist in downstream sealing and reduce torque. The ball is forced to the downstream side under pressure and forced against the downstream seat to effect and maintain a seal. Consequently, the valve will give bubble-tight shut-off throughout a long in-service life even with seats of relatively non-resilient materials such as TFE or Polyfill. The seats are also designed to perform a wiping action during each cycle—cleaning foreign materials off both the seat and ball, assuring leak-tight sealing.

The downstream sealing of Worcester's three-piece valves overcomes the two most common difficulties in the use of conventional ball valves: seat damage and high operating torque. A hole in the stem slot prevents any possibility of damage due to trapped cavity pressure when the ball is open. An optional ball cavity vent is available for specific applications. The Worcester design results in smoother, more efficient valve operation.

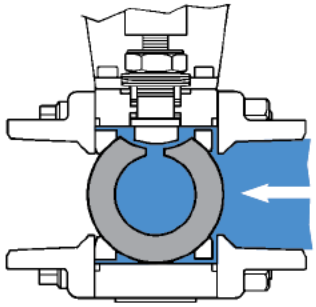



AUTOMATION

Worcester offers a complete line of pneumatic and electric automation packages for Series 44 valves. Both electric and pneumatic packages are offered for on/off or proportional control. Available options include:

FOR PNEUMATIC

- Failsafe operation
- End and top mounted limit switches
- Proximity switches
- Single and double acting pneumatic and electropneumatic positioners
- Pulsair® zero air bleed loop powered positioner
- ACCESS™ integral solenoid and limit switch packages

FOR ELECTRIC

- TYPE 4, 4x, 7 and 9 enclosures
- Remote position indication
- Electronic positioner
- Single loop, PID controller
- Computer interface
- Many more options for today's computer control applications.

SPECIFICATIONS

Series 44 Ball Valves

Valve Sizes: ¼", ⅜", ½", ¾", 1", 1¼", 1½", 2"

Valve Body Pressure Rating For Carbon Steel, Stainless Steel, Alloy 20 Valves: ANSI Class 600

¼" – 2"—Carbon Steel	1480 psi
¼" – 2"—Stainless Steel	1440 psi
¼" – 2"—Alloy 20®	1200 psi

Valve Body Pressure Rating for Brass Valves:
¼" – 1"—1500 psi
1¼" – 2"—1000 psi
This is the body pressure rating. Seat selection may lower the valve pressure rating. See page 5. Example: A ¾" Series 44 brass valve has a rating of 1500 psi at 70°F. Selection of TFE seats, operating at a fluid temperature of 160°F, limits total allowable pressure in the valve to 800 psi.

Body and Pipe End Materials:
Brass, Carbon Steel, 316 Stainless Steel, Alloy 20
See page 6 for material specifications

Ball: Brass, 316 Stainless Steel, Monel®, Alloy 20, Hastelloy C®

Design Specifications:
ANSI B16.34
ANSI B16.25 - Butt weld ends (weld end preparation)
ANSI B16.11
ANSI B1.20.1 - NPT pipe threads
MSS SP-25 - Valve marking
MSS SP-72 - Socket weld ball valves
NACE - MRO I-75 1984 Rev. Category 3

Seats: Buna, Neoprene, TFE, glass-reinforced TFE, UHMWPE (ultra high molecular weight polyethylene), Polyfill (carbon, graphite filled TFE), High-per Fill, Lubetal

Body Seals, Choice of:
Buna, Neoprene, Viton®, EPDM, TFE, UHMWPE, TFE coated 316 S.S., graphite coated 316 S.S.

Seals & Thrust Bearings:
PEEK, Graphite and Polyfill
See page 6 for individual parts identification and variations.

Temperature Range:
Dependent upon seal and seat choice, will operate from -50°F to +600°F.

Pressure Range: Valves will operate from 1 micron absolute to +1480 psi.

Seat/Seal Leakage:
Standard valves, less than 1×10^{-6} cc He/sec in board and through (bubble-tight is 1×10^{-4} cc He/sec). With preparation, leakage will be less than 2×10^{-9} cc He/sec. All valves 100% tested to bubble-tight standards.

Optional External Valve Trim:
300 Series stainless steel external components are available as an option on brass and carbon steel valves. They are standard on stainless steel and Alloy 20 valves.

S-7: Complete S.S. trim: handle, handle nut, lock washer, retaining nut, belleville washers, body bolts, nuts, stop pin.

Variations (V-numbers): Listing of V-Number Descriptions

V3	Upstream Relief Hole
V5	Hydrostatic Testing
V6	Source Inspection
V17	Grounding Thrust bearing
V20	Oxygen Service
V32	Oval Handle
V33	Oxygen Service without Source Inspect.
V36	Certificate of Compliance
V37	Certificate of Compliance and Hydro Testing
V38	Assemble without Lubricant
V46	Silicon-free Lubricant
V48	Extended Lever Handle
V58	B16.34 Compliance
V59	Extended Oval Handle
V60	OSHA Lockout
V66	Certificate of Compliance, European Valve Orders
V67	Weld-in-Place Valves

SPECIAL SERVICE AND APPROVALS

Underwriter Laboratory Listed

Flammable liquid shut-off (YRBX)
Gas shut-off (YRPV)
LP gas shut-off (YSDT)
Anhydrous ammonia shut-off (YQAR)
Compressed gas shut-off, including oxygen (YQNZ)
Trim and Drain Valves (VQGU)

Factory Mutual Approval for:

Fire Protection Systems (sprinkler systems, alarm check, dry pipe, deluge valve) Gas and Oil Safety Shut-off

Consult Worcester Controls when ordering approved valves.

Other Approvals

- U.S.C.G. - United States Coast Guard
- U.S.D.A. - United States Dept. of Agriculture

Valve Size	CV	Equivalent Length of Sched. 40 Pipe (ft.)
¼", ⅜"	8	0.9
½"	8	3.1
¾"	12	6.3
1"	32	3.1
1¼"	46	6.3
1½"	82	4.3
2"	120	7.5

SEAT PRESSURE/TEMPERATURE RATINGS

- Maximum Temperature for Seals:

UHMWPE: 200°F	Neoprene: 250°F
Buna: 250°F	EPR: 350°F
TFE: 400°F	Viton: 450°F
TFE coated S.S.: 650°F	Graphite coated S.S.: 1000°F

- "R" (Reinforced TFE) and "P" (Polyfill) seats may be used up to a maximum of 1480 psig as shown. Some decrease in optimum seat life may be expected in some cases above 1000 psig.
- TFE body seals are limited to 200°F temperature swings. (Thermal cycles)
- For high-pressure applications to 3000 psi, Worcester recommends the Series 4 three-piece valves with Lubetal seats. Refer to brochure no. PB-4. For pressures to 5000 psi, specify the Series H44 Dyn-O-Miser® valve with Lubetal or High-per Fill seats. Refer to brochure no. PB-950.

CAUTION: For high pressure media that are highly flammable, explosive or toxic, consult Worcester Controls.

NOTE: Standard Worcester valves are assembled with silicon based break-in lubricant. For other options, consult your distributor or Worcester Controls.

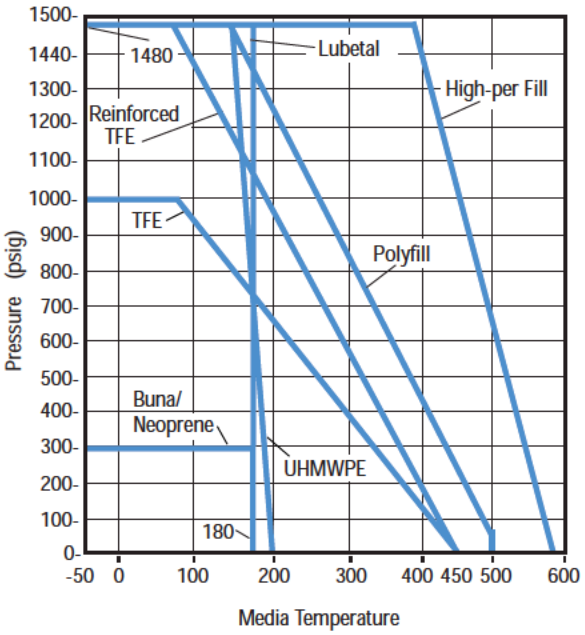

OPERATING TORQUE FOR AUTOMATED VALVES

Valve Torque:

Before the actuator can be sized for any given valve application, the operating torque required for the valve must be determined. The operating torque of the ball valve is influenced by a number of factors—some are design and materials related, others are application (service conditions) related. Design related factors include the type and material of the valve seats, while application factors include system pressure, media and frequency of operation.

For complete valve operating torque data, refer to Worcester's Actuator Sizing Manual (ASM). This eight page publication explains the concept of valve torque, presents torque curves for each seat material, and provides correction factors for media and the type of service such as on-off operation, cycle frequency, etc.



PARTS IDENTIFICATION

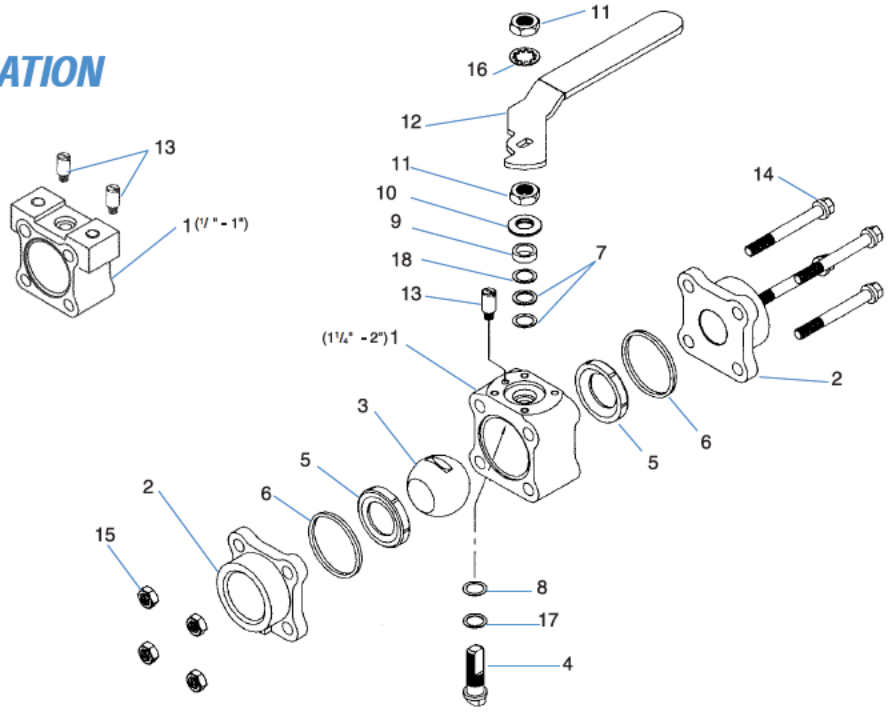

No.	Part	Qty	Material
1	Valve Body	1	Brass ASTM B283 Gr. C3770 Forged Carbon Steel ASTM A105 Forged or ASTM A216 Gr. WCB Cast Stainless Steel ASTM A351 Gr. CF8M Cast Alloy 20 ASTM A351 Gr. CN7M Cast
2	Pipe Ends**	2	Same as body material except stainless weld ends and Tri-Clamp® are Grade CF3M
3, 4	Ball and Stem Combinations	1	Brass ASTM B16 Gr. H02 Hard Chrome Plated ball; ASTM B16 Stem Stainless Steel ASTM A479 Gr. 316 S.S. Alloy 20 ASTM B473 Monel ASTM B164 Gr. N04400 Hastelloy C ASTM B574 Gr. N10276
5	Seats	2	Buna, Neoprene, TFE, Reinforced TFE, Polyfill, UHMWPE, High-per Fill, Lubetal
6	Body Seals	2	Buna, Neoprene, TFE, EPR, Viton, TFE Coated, 316 S.S. "S" gasket, UHMWPE, Graphite Coated 316 S.S. "S" Gasket
7	Stem Seal	2	Polyfill (UHMWPE with UHMWPE seats; Graphite with High-per Fill seats)
8	Thrust Bearing	1	Polyfill (UHMWPE with UHMWPE seats; PEEK with High-per Fill seats; Delrin with Lubetal seats)

No.	Part	Qty	Material
9	Stem Seal Follower	1	316 Stainless Steel
10	Belleville Washers†	2	Carbon Steel: Zinc Plated ANSI 301 Stainless Steel
11	Retaining Nut†	2	Carbon Steel: Zinc Plated; ANSI 300 Series Stainless Steel: Zinc Plated
12	Handle Assembly†	1	Carbon Steel: Zinc Plated ANSI 300 Series Stainless Steel Vinyl Covered
13	Stop Pin†	1 or 2	Carbon Steel: Zinc Plated S.S. ASTM A276 300 Series
14, 15	Body Bolts and Nuts†	4	Carbon Steel and Brass Valves Bolt — A193 Gr B7; Zinc Plated Nut — ASTM A194 Gr. 2H; Zinc Plated Stainless Steel and Alloy 20 Valves Bolt — ASTM A193 Gr. B8: Zinc Plated Nut — ASTM A194 Gr. 8 S7 Stainless Steel Externals Option Bolt — ASTM A193 Gr. B8: Zinc Plated Nut — ASTM A194 Gr. 8
16	Lockwasher†	1	Carbon Steel: Zinc Plated Stainless Steel 300 Series
17	Thrust Bearing Protector*	1	PEEK (UHMWPE with UHMWPE seats; Delrin with Lubetal seats)
18	Seal Protector*	1	PEEK
19	Name Plate (not shown)	1	Stainless Steel ANSI 304

†Stainless Steel standard on Series 4466 and 44AA valves.
*Oxygen Service Valves use Polyfill in place of PEEK.
**All stainless steel weld ends in 316L.

DIMENSIONS

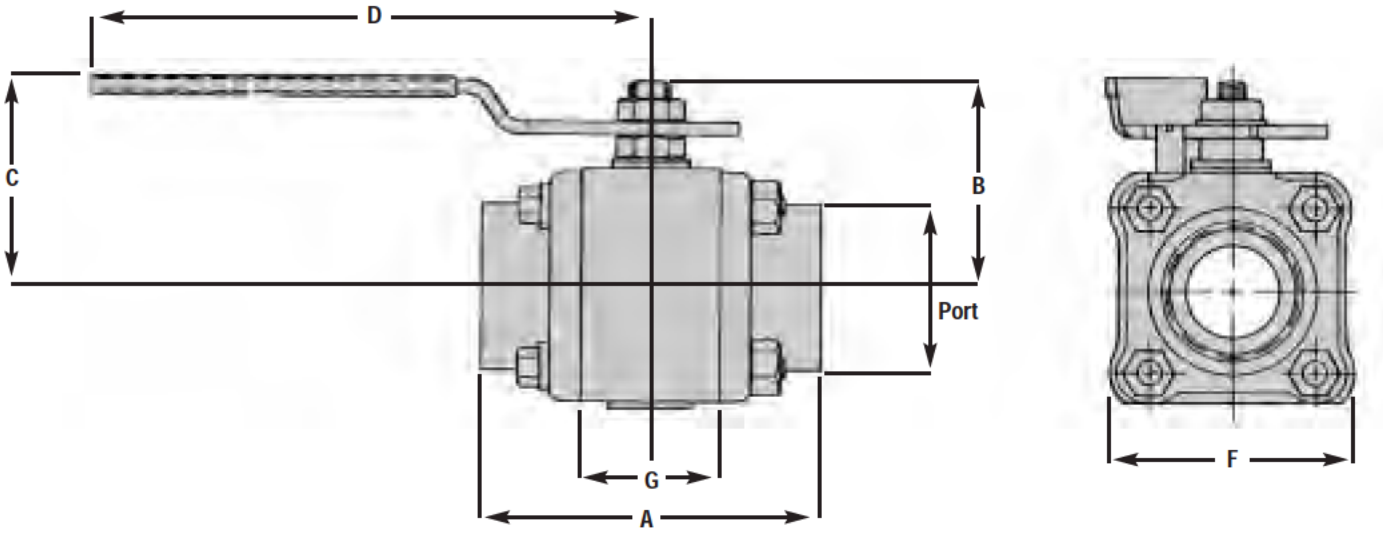

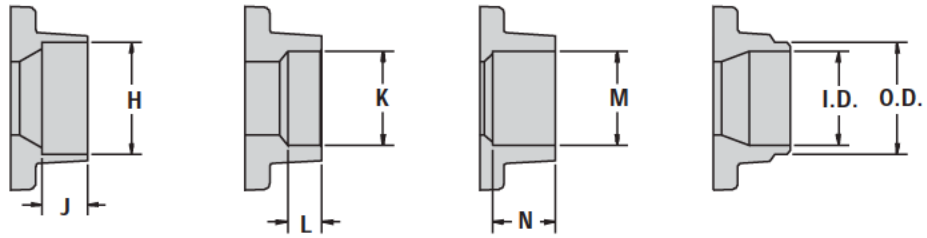

SOCKET WELD
SW

O.D. TUBE END
SWO

TUBE END TE
K, L, OR M
(Copper Tube)

BUTT WELD BW
SCH. 5, 10 (Stainless Steel)
SCH. 40, 80 (Carbon Steel)

**The inside configuration of O.D. tube pipe ends varies by size and material.*
**For XBO and TC ends, call Worcester Controls Corporation.*

Valve Size	A	B	C	D	F	G	Socket Weld SW		O.D. Tube End SWO		O.D. Tube End TE		Butt Weld Stainless Steel				Butt Weld Carbon Steel				Port	Approx. Weight lb. (kg)
													BW5 Sch. 5		BW1 Sch. 10		BW4 Sch. 40		BW8 Sch. 80			
							H	J	K	L	M	N	O.D.	I.D.	O.D.	I.D.	O.D.	I.D.	O.D	I.D.		
1/4"	2.54 (64.5)	1.55 (39.4)	1.76 (44.7)	5.53 (140)	1.75 (44.5)	.813 (20.7)	.555 (14.1)	.44 (11.2)	— —	— —	.378 (9.6)	.37 (9.4)	— —	— —	.55 (14.0)	.406 (10.3)	.550 (14.0)	.344 (8.7)	— —	— —	.44 (11.2)	1.10 (.50)
3/8"	2.54 (64.5)	1.55 (39.4)	1.76 (44.7)	5.53 (140)	1.75 (44.5)	.813 (20.7)	.690 (17.5)	.44 (11.2)	— —	— —	.503 (12.8)	.44 (11.2)	— —	— —	.67 (17.0)	.547 (13.9)	.670 (17.0)	.516 (13.1)	— —	— —	.44 (11.2)	1.10 (.50)
1/2"	2.54 (64.5)	1.55 (39.4)	1.76 (44.7)	5.53 (140)	1.75 (44.5)	.813 (20.7)	.855 (21.7)	.44 (11.2)	.510 (13.0)	.44 (11.2)	.628 (15.6)	.56 (14.2)	.840 (21.3)	.710 (18.0)	.84 (21.3)	.672 (17.1)	.840 (21.3)	.625 (15.9)	.840 (21.3)	.550 (14.0)	.44 (11.2)	1.10 (.50)
3/4"	2.76 (70.1)	1.64 (41.7)	1.86 (47 2)	5.53 (140)	2.00 (50.8)	.969 (24.6)	1.065 (27.1)	.56 (14.2)	.760 (19.3)	.56 (14.2)	.878 (22.3)	.81 (20.6)	1.05 (26.7)	.920 (23.4)	1.05 (26.7)	.875 (22.2)	1.05 (26.7)	.812 (20.6)	1.05 (20.6)	.753 (26.7)	.56 (14.2)	1.75 (.79)
1"	3.66 (93.0)	2.19 (55.6)	2.28 (57 9)	6.53 (166)	2.38 (60.5)	1.25 (31.8)	1.330 (33.8)	.72 (18.3)	1.01 (25.7)	.56 (14.2)	1.129 (28.7)	.97 (24.5)	1.31 (33.3)	1.18 (30.1)	1.31 (33.3)	1.09 (27.8)	1.31 (33.3)	1 05 (26.6)	1.31 (33.3)	.957 (24.3)	.81 (20.6)	3.10 (1.41)
1 1/4"	4.16 (105)	2.38 (60.5)	2.47 (62.7)	6.53 (166)	2.70 (68.6)	1.63 (41.3)	1.675 (42.5)	.72 (18.3)	1.26 (32.0)	.62 (15.8)	1.379 (35.0)	1.03 (26.2)	1.66 (42.2)	1.53 (38.9)	1.66 (42.2)	1.44 (36.5)	1.66 (42.2)	1.38 (35.1)	1.66 (42.2)	1.27 (32.3)	1.00 (25.4)	4.50 (2.04)
1 1/2"	4.50 (114)	2.88 (73.2)	2.83 (71 9)	8.03 (204)	3.16 (80.3)	1.91 (48.4)	1.915 (48.6)	.72 (18.3)	1.51 (38.4)	.62 (15.8)	1.629 (41.4)	1.15 (29.2)	1.91 (48.5)	1.77 (45.0)	1.91 (48.5)	1.67 (42.5)	1 91 (48.5)	1.59 (40.5)	1.91 (48.5)	1.52 (38.6)	1.25 (31.8)	6.20 (2.82)
2"	4.94 (126)	3.06 (77.7)	3.02 (76.7)	8.03 (204)	3.56 (90.4)	2.22 (56.3)	2.406 (61.1)	.84 (21.3)	2.01 (51.1)	.67 (17.0)	2.129 (54.1)	1.15 (29.2)	2.38 (60.5)	2.24 (57.0)	2.38 (60.5)	2.15 (54.5)	2.38 (60.5)	2 06 (52.4)	2.38 (60.5)	1.93 (48.9)	1.50 (38.1)	9.50 (4.31)

Dimensions are for reference only. For tolerances, consult Worcester Controls.

How to Order*

Valve Size (1¼")	Options	Product Series (44)	Body, Pipe Ends (6)	Ball & Stem (6)	Seats (T)	Body Seals	Ends (SW) (**)
1/4" 3/8" 1/2" 3/4" 1" 1 1/4" 1 1/2" 2"	**Blank** - Built with lever handle **E** - No handle valve built for automation **A** - No handle†† **B** - No handle†† **G** - Stem Grounding Spring **K** - Locking Handle **V** - Vacuum Service Prep **X** - Oxygen Service Prep	**44**	**1-** Brass **4-** Carbon Steel **6-** 316 S.S. **A-** Alloy 20	**1-** Brass (chrome plated) **4-** Carbon Steel (chrome plated) **6-** 316 S.S. **7-** Monel **A-** Alloy 20 **C-** Hastelloy C	**B-** Buna **N-** Neoprene **T-** TFE **R-** Reinforced TFE **P-** Polyfill **U-** UHMWPE **X-** High-per Fill **Y-** Lubetal	**B-** Buna **N-** Neoprene **T-** TFE **E-** EPR **V-** Viton **M-** TFE Coated 316 S.S. **G-** Graphite Coated 316 S.S. **U-** UHMWPE	**SE** - Screwed Pipe Ends (NPT) Any Sch. Pipe† Carbon Steel Stainless Steel Alloy 20 Butt Weld (BW) ends: **BW1** - Stainless Steel, Sch. 10 **BW4** - Carbon Steel, Sch. 40 **BW4** - Stainless Steel, Sch. 40 **BW5** - Stainless Steel, Sch. 5 **BW8** - Carbon Steel, Sch. 80 **TE** - Solder/Sweat Ends Brass - Type K, L, or M copper tube **SW** - Socket Weld Ends Any Sch. Pipe† Carbon Steel Stainless Steel Alloy 20 **SWO** - Socket Weld Ends O.D. Tube S.S.(not available in 1/4" and 3/8" sizes) **TC** - Quick Disconnect **XBO** - Extended Butt Weld **NP** - No Pipe Ends, body bolts and nuts

***TO ORDER V67 WELD-IN-PLACE VALVES:** Series 44 valves with "G" body seals and seats of Reinforced TFE (R), Polyfill (P), or High-per Fill (X), may be welded in a line in the assembled condition.

**Variations (V-Numbered Options) see page 4 for listing. Leave blank if no variations.

Add V58 to ordering code if full B16.34 compliance is required.
Full ANSI B16.34 compliance requires a hydrotest and certified material test reports.

ORDERING EXAMPLE: 1¼" Series 44 valve with 316 S.S. body, ball and stem, TFE seats and seals, and socket weld ends.

EXTERNALS: Externals, including handles, are normally constructed of zinc plated carbon steel. Handles are vinyl coated. When required, the body bolts, nuts, retaining nut, handle nut, lock-washer, stop pin and handle are also available in stainless steel by special order (S-7 suffix in ordering code), and come standard when ordering 4466 Stainless Steel or 44AA Alloy 20 valves.

†All IPS schedules of stainless, carbon and alloy steel pipe, S.P.S. copper pipe and red brass pipe.

††To order a Series 44 valve for use with:
34 or 36 actuators, use prefix ordering code "A". EXAMPLE: 1" A 4446 6 PMSE
39 or 75 actuators, use prefix ordering code "B".

Caution: Ball valves can retain pressurized media in the body cavity when closed. Use care when disassembling. Always open valve to relieve pressure prior to disassembly.
Due to continuous development of our product range, we reserve the right to alter the product specifications and information contained in this brochure as required.

Monel® is a registered trademark of Inco Alloys International.
Hastelloy® is a registered trademark of Haynes International.
Tri-Clamp® is a registered trademark of Ladish Co.
Viton® is a registered trademark of E.I. duPont.
Polyfill® is a registered trademark of Worcester Controls.
Lubetal™ is a trademark of Garlock, Inc.
ACCESS™ is a trademark of Worcester Controls.
Alloy 20® is a trademark of CRS Holdings, Inc.
Pulsair® is a registered trademark of Worcester Controls.
High-per Fill® is a registered trademark of Worcester Controls.
Dyn-O-Miser® is a registered trademark of Worcester Controls.
Worcester is a registered trademarks of Flowserve Corporation.
Invensys™ is a trademark of BTR Siebe plc.

Flowserve Corporation has established industry leadership in the design and manufacture of its products. When properly selected, this Flowserve product is designed to perform its intended function safely during its useful life. However, the purchaser or user of Flowserve products should be aware that Flowserve products might be used in numerous applications under a wide variety of industrial service conditions. Although Flowserve can (and often does) provide general guidelines, it cannot provide specific data and warnings for all possible applications. The purchaser/user must therefore assume the ultimate responsibility for the proper sizing and selection, installation, operation, and maintenance of Flowserve products. The purchaser/user should read and understand the Installation Operation Maintenance (IOM) instructions included with the product, and train its employees and contractors in the safe use of Flowserve products in connection with the specific application.

While the information and specifications contained in this literature are believed to be accurate, they are supplied for informative purposes only and should not be considered certified or as a guarantee of satisfactory results by reliance thereon. Nothing contained herein is to be construed as a warranty or guarantee, express or implied, regarding any matter with respect to this product. Because Flowserve is continually improving and upgrading its product design, the specifications, dimensions and information contained herein are subject to change without notice. Should any question arise concerning these provisions, the purchaser/user should contact Flowserve Corporation at any one of its worldwide operations or offices.

For more information about Flowserve Corporation, contact www.flowserve.com or call USA 1-800-225-6989.

FLOWSERVE CORPORATION
FLOW CONTROL DIVISION
1978 Foreman Drive
Cookeville, Tennessee 38501 USA
Phone: 931 432 4021
Facsimile: 931 432 5518

© 2003 Flowserve Corporation, Irving, Texas, USA. Flowserve and Worcester Controls are registered trademarks of Flowserve Corporation.

PB 401-32 02/03 Printed in USA

Honeywell

L404F,T,V
PressureTrol® Controllers

PRODUCT DATA



APPLICATION

L404F PressureTrol® Controllers provide operating control with automatic limit protection for pressure systems of up to 2070 kPa, or 300 psi.

L404T,V PressureTrol® Controllers are for use on oil burner systems for pressures up to 1035 kPa or 150 psi.

FEATURES

- **Models available in a series of control ranges, and pressure scales in kPa and psi.**
- **All models automatically reset and have an adjustable differential.**
- **Models have snap switch to open or close a circuit on a pressure rise.**
- **Case has a clear plastic cover so setpoints can be observed.**
- **1/4 inch—18 NPT connection for pipe on diaphragm assembly.**
- **Ground screw terminal.**

L404F:

- **Controllers may be used with steam, air, or noncombustible gases, or fluids noncorrosive to the pressure sensing element.**

L404T:

- **High pressure limits, break a circuit on oil pressure rise above setpoint.**

L404V:

- **Low pressure limits, makes a circuit on oil pressure rise above setpoint.**

Contents

Application 1
Features 1
Specifications 2
Ordering Information 2
Installation 4
Settings and Adjustments 6
Checkout 7

71-2429-06

SPECIFICATIONS

Model:
L404F,T,V PressureTrol® Controllers. See Table 1.

Table 1. Models with kPa—psi and Other Pressure Scales.

Model Number	Operating Ranges		Subtractive Differential[a]		Maximum Diaphragm pressure	
	kPa	psi	kPa	psi	kPa	psi
L404F1060	15 to 100	2 to 15	15 to 40	2 to 6	170	25
L404F1078	35 to 350	5 to 50	40 to 100	6 to 14	590	85
L404F1094	140 to 2070	20 to 300	140 to 345	20 to 50	2410	350[b]
L404F1102	70 to 1035	10 to 150	70 to 150	10 to 22	1550	225
L404F1219[c]	15 to 100	2 to 15	15 to 40	2 to 6	170	25
L404F1243[c]	35 to 350	5 to 50	40 to 100	6 to 14	590	85
L404F1227[c]	70 to 1035	10 to 150	70 to 150	10 to 22	1550	225
L404F1235[c]	140 to 2070	20 to 300	140 to 345	20 to 50	2410	350[b]
L404F1300[c]	415 to 1240	60 to 180	40 fixed	6.0 Fixed	1550	225
L404F1326	0 to 100	0 to 15	15 to 40	2 to 6	170	25
L404F1334	0 to 350	0 to 50	40 to 100	6 to 14	590	85
L404F1342	35 to 1000	5 to 145	70 to 150	10 to 22	1550	225
L404F1359	70 to 2000	10 to 290	140 to 345	20 to 50	2410	350[b]
L404F1367	7 to 55	1 to 8	5 to 14	0.75 to 2	170	25
L404F1375[d]	35 to 350	5 to 50	40 to 100	6 to 14	590	85
L404F1383[d]	70 to 1035	10 to 150	70 to 150	10 to 22	1550	225
L404F1391[d]	140 to 2070	20 to 300	140 to 345	20 to 50	2410	350[b]
L404F1409[d]	15 to 100	2 to 15	15 to 40	2 to 6	170	25
L404F1441	0.35 to 3.5 Kg/cm^2	5 to 50 psi	0.4 to 1.0 Kg/cm^2	6 to 14 psi	6 Kg/cm^2	85 psi
L404T1055	35 to 350	5 to 50	40 to 100	6 to 14	590	85
L404T1063	70 to 1035	10 to 150	70 to 150	10 to 22	1550	225
L404V1087[d]	70 to 1035	10 to 150	70 to 150	10 to 22	1550	225
L404V1095[d]	35 to 350	5 to 50	40 to 100	6 to 14	590	85

[a] Nominal at midscale operating range.

[b] Brass bellows instead of stainless steel diaphragm.

[c] Models with 1/4-19 BSPT thread instead of 1/4-18 NPT thread.

[d] Make-on-rise models with terminal B omitted for miswiring compliance.

ORDERING INFORMATION

When purchasing replacement and modernization products from your TRADELINE® wholesaler or distributor, refer to the TRADELINE® Catalog or price sheets for complete ordering number.

If you have additional questions, need further information, or would like to comment on our products or services, please write or phone:

1. Your local Honeywell Automation and Control Products Sales Office (check white pages of your phone directory).
2. Honeywell Customer Care
   1885 Douglas Drive North
   Minneapolis, Minnesota 55422-4386

In Canada—Honeywell Limited/Honeywell Limitée, 35 Dynamic Drive, Toronto, Ontario M1V 4Z9.
International Sales and Service Offices in all principal cities of the world. Manufacturing in Australia, Canada, Finland, France, Germany, Japan, Mexico, Netherlands, Spain, Taiwan, United Kingdom, U.S.A.

Table 2. Conversion Table.

Operating Range Conversions			Subtractive Differential Conversions		
kg/cm²	kPa	psi	kg/cm²	kPa	psi
0.1 to 1.05	15 to 100	2 to 15	0.15 to 0.4	15 to 40	2 to 6
0.4 to 3.5	35 to 350	5 to 50	0.4 to 1.0	40 to 100	6 to 14
0.7 to 10.0	70 to 1035	10 to 150	0.7 to 1.6	70 to 150	10 to 22
1.5 to 20.0	140 to 2070	20 to 300	1.5 to 3.5	150 to 300	20 to 50

Table 3. Switch Ratings (Amperes).

Switch State	120 Vac	240 Vac
Full Load	8.0	5.1
Locked Rotor	48.0	30.6

Pressure Sensing Element: Stainless steel diaphragm (140 to 2070 kPa models) has brass bellows.

Maximum Ambient Temperature: 66°C (150°F). Also, refer to note under Mounting.

Adjustment Means: Screws on top of control case. Scales are marked in psi or kPa.

Mounting Means: 1/4 inch-18 NPT connection on diaphragm assembly; or surface mounts using holes in back of case.

Dimensions: See Fig. 1.

Switching Action: Snap switch breaks R-B (closes R-W) on pressure rise. Make-on-rise devices omit terminal B.

Grounding Means: Ground screw terminal marked with a circled ground symbol.

Accessories:
50024585-001 Brass Steam Trap. (Please refer to the applicable Equipment/Application Standards for compliance.)
14026 Steel Steam Trap. (Please refer to the applicable Equipment/Application Standards for compliance.)
118023 Steel Steam Trap for BSPT Models.
33312B Knurled Knob—fits on top of adjusting screws.
4074BWJ Range Stop—range stop screw, Part No. 107194, and wrench, Part No. 23466, to limit setpoint range.

Approvals:
Underwriters Laboratories Inc. Listed: file no. MP466, vol. 10, guide no. MBPR.
Canadian Standard Association certified: file no. LR1620, guide no. 400E-0.

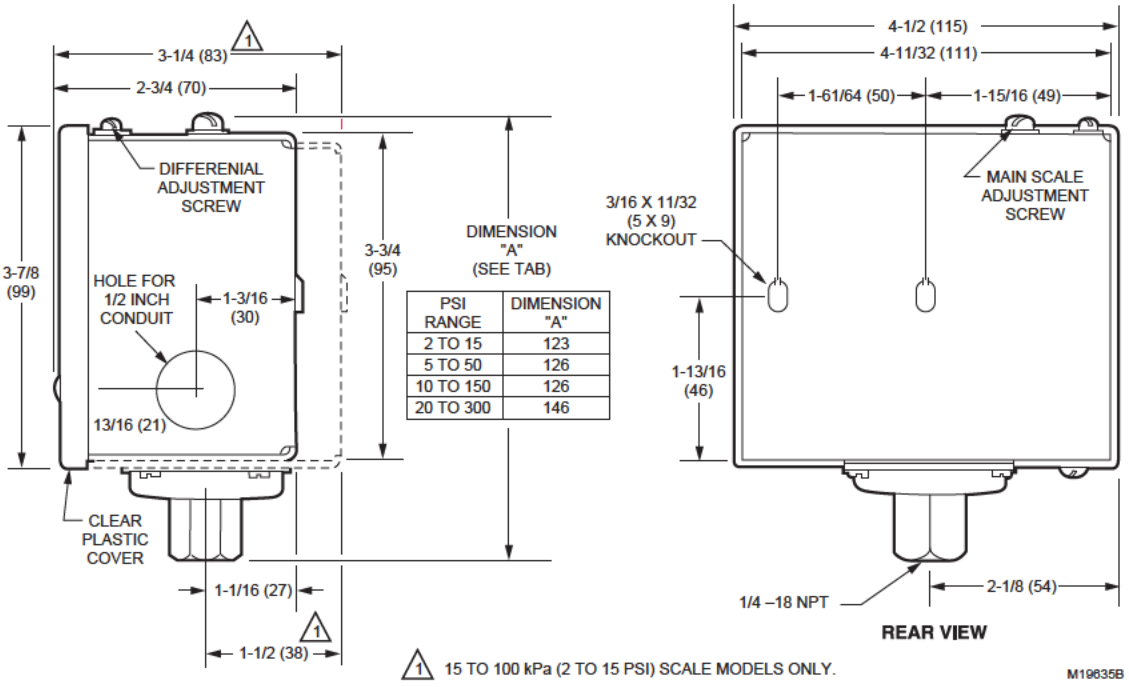

Fig. 1. L404F,T,V approximate dimensions in inches (millimeters in parentheses).

INSTALLATION

When Installing This Product…

1. Read these instructions carefully. Failure to follow them could damage the product or cause a hazardous condition.
2. Check on the ratings given in the instructions and marked on the product to make sure the product is suitable for your application.
3. Installer must be a trained, experienced service technician.
4. After installation is complete, check out the product operation as provided in these instructions.

IMPORTANT

When making pipe connections, use pipe dope sparingly to seal the joints; any excess dope may clog the small hole in the fitting and prevent the controller from operating properly.

Location and Mounting (L404F)

Locate the L404F where the ambient temperature will not exceed 66°C (150°F). The L404F can be mounted near the pressure gauge, at a remote location, in a fitting provided by the boiler manufacturer, or in a special mounting on low water cutoffs. The L404F should always be mounted above the water line in steam boiler applications.

NOTE: For accurate operation, supplemental heat should be added to installations where temperatures fall below -29°C (-20°F).

A steam trap must be connected between the L404F and the boiler (see Fig. 2) to prevent boiler scale and corrosive vapors from attacking the elbows or diaphragm.

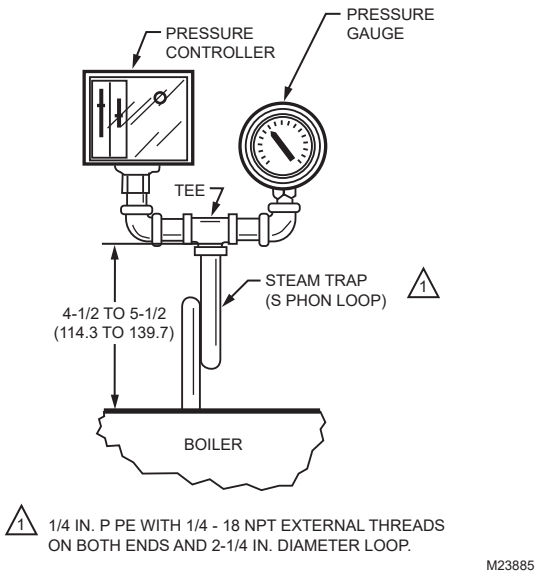

Fig. 2. Steam trap mounting.

Pressure Gauge Mounting

To mount beside a pressure gauge, remove the gauge, and install in its place the steam trap with a tee on top. Mount the PressureTrol® unit and pressure gauge on the side of the tee by means of nipples and elbows (see Fig. 2).

Remote Mounting

Excessive vibration at the boiler may affect the operation of the L404F. In these cases, the L404F should be remotely located, subject to the following:

1. All piping must be suitable and properly pitched to drain all condensation back to the boiler.
2. The remote mounting must be solid.
3. A steam trap must be used at one end of the piping.

Boiler Mounting

If it is not convenient to mount the L404F adjacent to the pressure gauge, install a steam trap at the location recommended by the boiler manufacturer, then screw the device directly to the steam trap.

Location and Mounting (L404T,V)

Location

NOTE: For most accurate operation, supplemental heat should be added to installations where the temperature falls below -20°F (-29°C).These controllers can be mounted at any location in the oil supply line, depending on the application. Typical locations are shown in Fig. 3. The low oil pressure controller should be located upstream from the safety shutoff valve(s). In a downstream location, there would be zero pressure when the burner is not running and the safety shutoff valve(s) is (are) closed. This could prevent startup or require manual reset every time the burner is started. The high oil pressure controller should be located as near to the burner as possible.

Mounting

Mount the oil pressure controller directly on the main pipe. Insert a tee in the pipe line, and connect a pipe nipple of appropriate size to the tee (see Fig. 4). Screw the hexagonal fitting (1/4-18 NPT internal thread) of the pressure controller to the pipe nipple. To avoid leaks and damage to the case, use a parallel jaw wrench on the hexagonal fitting close to the pipe nipple. Do not tighten the pressure controller by hand by holding the case.

Make all pipe connections in accordance with approved standards. Use only a small amount of pipe compound to seal the connection joints. Excess pipe compound may clog the orifice in the pipe fitting and prevent the controller from operating properly.

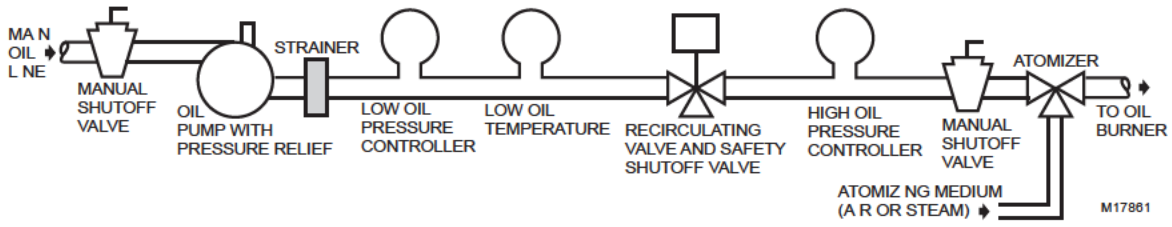

Fig. 3. Typical locations of pressure controllers in an oil burner system.

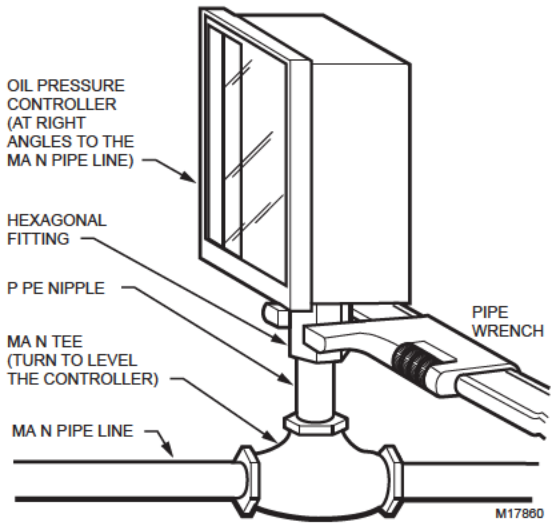

Fig. 4. Mounting an oil pressure controller directly on the main pipe.

Using with Preheated Oil

When used with preheated oil, a siphon loop must always be connected between the controller and the main pipe (see Fig. 5) to provide thermal buffering.

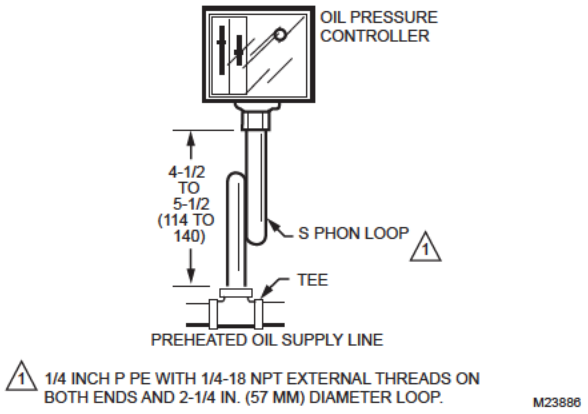

Fig. 5. Mounting of a siphon loop, with approximate dimensions in in. (mm).

WIRING

⚠ WARNING

Electrical Shock Hazard.
Can cause severe injury, death or property damage.
Disconnect the power supply before beginning wiring. More than one power supply disconnect may be required.

All wiring must comply with applicable codes and ordinances. All models have terminals (on the MicroSwitch® snap-acting switch) inside the cover and knockouts for conduit and cable. Refer to manufacturer installation and wiring instructions, if available, and to typical hookups shown in Fig. 6 to 10.

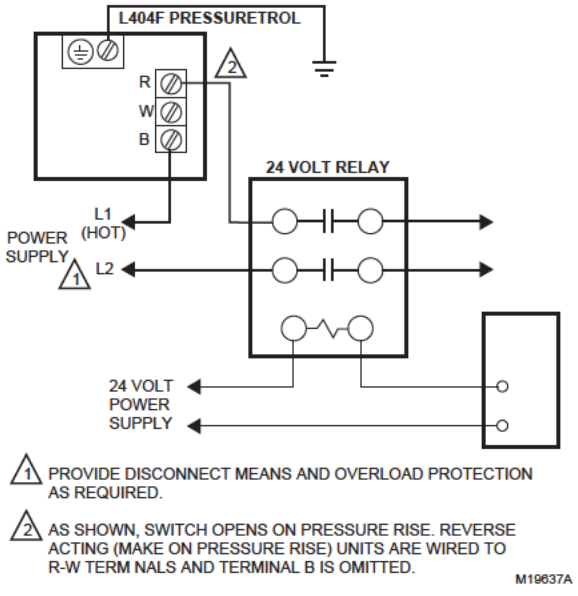

Fig. 6. L404F in low voltage relay circuit.

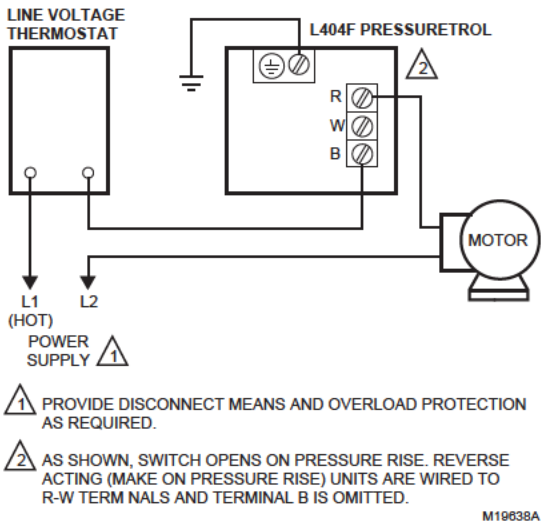

Fig. 7. L404F in a typical 2-wire control circuit.

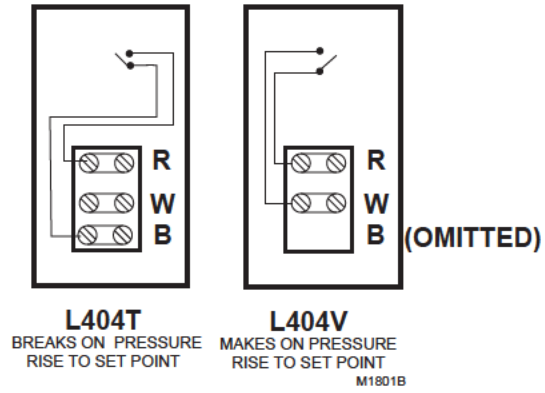

Fig. 8. L404T,V terminal blocks and internal schematics.

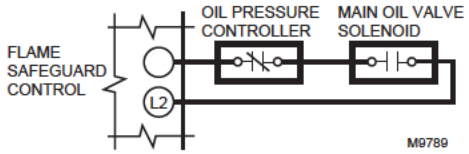

Fig. 9. Hookup of an oil pressure controller used on a single burner system with an integral oil pump.

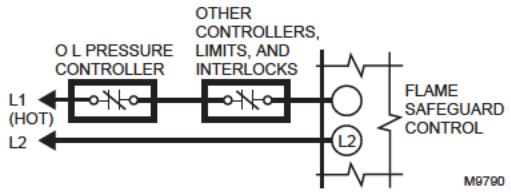

Fig. 10. Hookup of an oil pressure controller used on a single burner or multiburner system with an external oil pump.

SETTINGS AND ADJUSTMENTS

When the pressure at the control rises above the L404 setpoint, a circuit opens between the R-B terminals. During a pressure fall, R-B will close at the setpoint pressure minus the switch differential.

For example, if a controller is set to differential **B** (see Fig.11) with a controller setpoint of **A**, R-B will open when the pressure rises to **A**. Then during a pressure fall, the R-B terminals will close when the pressure drops to **C** (**A** minus differential **B**).

For make on rise applications, the switch is wired to R-W terminals. The R-W circuit will close on pressure rise to the setpoint. R-W will open again on a pressure drop past the switch differential.

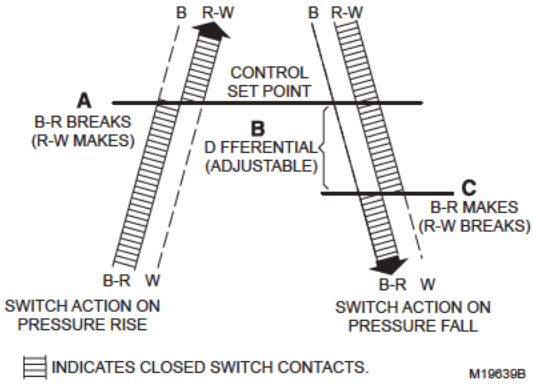

Fig. 11. Operation of switch on pressure rise and fall.

Setpoint Adjustment

Turn the pressure adjusting screw on the top of the controller (Fig. 12) to adjust the setpoint. Turn the differential adjusting screw to the desired pressure difference between switch opening and switch closing.

NOTE: When the main scale setting is at the lower end of the operating range, the differential range will be less than the differential setting by approximately 20 percent.

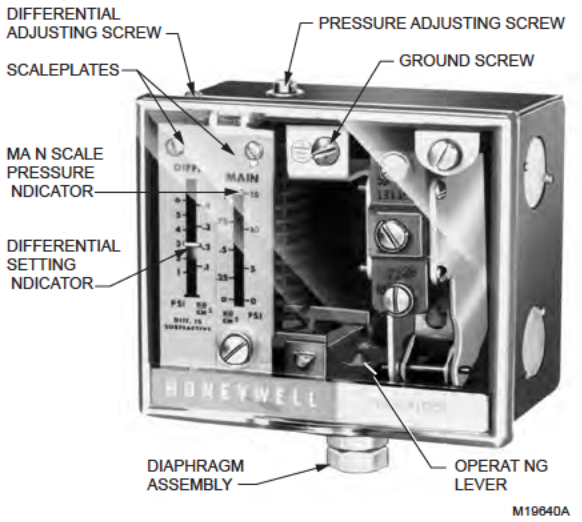

Fig. 12. view of L404 PressureTrol® Controller.

Scaleplate Adjustment

The L404F,T,V has been carefully calibrated during manufacture and should not require recalibration.

However, if recalibration is necessary, remove the cover and loosen the setscrews which hold the scaleplate. Adjust the plate up or down, as required, to bring the device into calibration. Tighten the setscrews securely and replace the cover.

CHECKOUT

After the controller has been installed, wired and adjusted, it should be tested with the system in operation. First, allow the system to stabilize. Then, observe the operation of the controller while raising and lowering its setpoint. Pressure should increase when the setpoint is raised and decrease when the setpoint is lowered.

Also, check the make and break points of the controller. If they do not agree with a separate, accurately calibrated pressure gauge, a slight adjustment of the scaleplate(s) may be necessary.

Use accurate pressure testing equipment when checking out the controller. Do not rely on inexpensive gauges. The controllers are carefully calibrated at the factory.

M9161, M9164, M9171, M9174 Modutrol IV™ Motors

SPECIFICATION DATA



- ❑ M9161
- ❑ M9164
- ❑ M9171
- ❑ M9174

APPLICATION

These Modutrol® Motors are reversing, proportional motors used to operate valves or dampers in electric (Series 90) modulating circuits.

FEATURES

- **Replace M934 Motors.**
- **Oil immersed motor and gear train for reliable performance and long life.**
- **Wiring box provides NEMA 3 weather protection.**
- **Quick-connect terminals standard—screw terminal adapter available.**
- **Adapter bracket for matching shaft height of older motors is standard with replacement motors.**
- **Die-cast aluminum housing.**
- **Internal auxiliary switches are available factory mounted or can be field added to TRADELINE® models.**
- **Field addable interface modules can be mounted in wiring box to upgrade actuator to Series 70 (electronic) control.**
- **Up to six motors can be paralleled from one Series 90 controller.**

® U.S. Registered Trademark
Copyright © 1996 Honeywell Inc. • All Rights Reserved

SPECIFICATIONS

TRADELINE® Models

TRADELINE models are selected and packaged to provide ease of stocking, ease of handling, and maximum replacement value. TRADELINE model specifications are the same as those of standard models unless otherwise specified. M9164D1009, M9174D1007 are TRADELINE models. TRADELINE models have auxiliary switch cams.

Standard Models:

M9161A,C
M9164A,B,C,D,V
M9171A,B,C
M9174B,C,D

N N N N

Control Type
91 is Series 90

Power Rating
6 is low torque: 5 lb-in.
7 is medium torque: 75 lb-in.

Output Drive
4 is dual-ended shaft, nonspring return
1 is single-ended shaft, nonspring return

Suffix Letter
A: Fixed stroke (90° or 160°), No auxiliary switches
B: Fixed stroke (90° or 160°), 1 auxiliary switch
C: Fixed stroke (90° or 160°), 2 auxiliary switches
D: Adjustable stroke (90° to 160°), No auxiliary switch
V: Fixed stroke (90° or 160°), No auxiliary switches

NOTE: Some motors furnished to HVAC equipment manufacturers have a single-ended shaft and/or no wiring box.

Electrical Ratings: (M9161, M9164)

M9161, M9164	Voltage (V at 50/ 60 Hz)	Current Draw (A)	Power Consump-tion (W)
Without Transformer[a]	24	0.62	14
With Internal Transformer	120	0.20	19
	220 (50 Hz)	0.12	19
	240	0.10	19

[a] Internal transformer can be field added.

Electrical Ratings: (M9171, M9174)

M9171, M9174	Voltage (V at 50/ 60 Hz)	Current Draw (A)	Power Consump-tion (W)
Without Transformer[a]	24	0.71	16
With Internal Transformer	120	0.22	21
	220 (50 Hz)	0.13	21
	240	0.11	21

[a] Internal transformer can be field added.

Controller Type:
Series 90 Control Circuit—135 ohm, Series 90 proportioning controller. Series 90 high or low limit controller with manual minimum position potentiometer (with a combined total resistance of up to 500 ohms) can also be used in the control circuit.

Motor Rotation:
The closed position is the limit of counterclockwise rotation as viewed from the power end of the motor. Motor opens clockwise (as viewed from the power end). These motors are shipped in the closed (fully counterclockwise) position.

Stroke:
Fixed at 90° or 160° or adjustable 90° to 160°.

Maximum Damper Rating:
M9161, M9164: 48 in. B dimension.
M9171, M9174: 100 in. B dimension.

Maximum Dead Weight Load on Shaft:
Power End: 100 lb (45.4 kg) maximum.
Auxiliary End: 100 lb (45.4 kg) maximum.

Crankshaft: 3/8 in. (9.5 mm) square.
M9164 and M9174 have dual-ended shaft.
M9161 and M9171 have single-ended shaft.

Auxiliary Switch Ratings (Amperes):
M9164B and M9174B have one spdt snap switch.
M9164C, M9171C and M9174C have two spdt snap switches.

One Contact Rating[a] Amps	120V	240V
Full Load	7.2	3.6
Locked Rotor	43.2	21.6

[a] 40 VA pilot duty, 120/240 Vac on opposite contact.

Dimensions:
See Fig. 1.

Ambient Temperature Ratings:
Maximum: 150°F (66°C) at 25% duty cycle.
Minimum: Minus 40°F (-40°C).

Underwriters Laboratories Inc. Listed:
File No. ED4436, Guide No. XAPX.

Canadian Standards Association Certified:
General Listing File No. LR1620, Guide 400-E.

Timing and Torque:

Model	Timing		Torque in lb-in (N•m)	
	90° Stroke Motors	160° Stroke Motors	Normal Running	Break-away[a]
M9161, M9164	30 sec	1 min	35 (4.0)	70 (8.0)
M9171, M9174	30 sec	1 min	75 (8.5)	150 (17.0)

[a] Breakaway torque is the maximum torque available to overcome occasional large loads such as a seized damper or valve. *Motor must not be used continuously at this rating.*

Accessories:

ES650117 Explosion-proof Housing: Encloses motor for use in explosive atmospheres. Not for use with Q601, Q618, and Q455 Linkages. To order, contact Nelson Electric, Order Services Dept., P.O. Box 726, Tulsa, OK 74101, (918) 627-5530 for name of nearest local representative. Requires Honeywell 7617DM Coupling.

Q607 External Auxiliary Switch: Controls auxiliary equipment as a function of motor position.

Internal Auxiliary Switch Kits: Can be field-installed on TRADELINE models.
- 220736A—One-switch Kit.
- 220736B—Two-switch Kit.

Q605 Damper Linkage: Connects motor to damper. *Includes motor crank arm.*

Q618 Linkage: Connects Modutrol motor to water or steam valve.

Q601 Bracket and Linkage Assembly: Connects Modutrol motor to water or steam valve.

Q100 Linkage: Connects Modutrol motor to butterfly valve.

Q209E,F Potentiometer: Limits minimum position of motor.

Q68 Dual Control Potentiometer: Controls 1 through 9 additional motors.

Q181 Auxiliary Potentiometer: Controls 1 or 2 additional motors.

221455A Infinitely Adjustable Crank Arm: Approximately 0.75 in. (19 mm) shorter than the 4074ELY Crank Arm. Can rotate through downward position and clear base of motor without requiring use of adapter bracket.

7617ADW Adjustable Crank Arm: Approximately 0.75 in. (19 mm) shorter than the 7616BR Crank Arm. Can rotate through the downward position and clear base of motor without requiring use of adapter bracket.

220741A Screw Terminal Adapter: Converts the standard quick-connect terminals to screws terminals.

Transformers: Mounted internally, provide 24 Vac power to motor.
- 198162JA—24 Vac; 50/60 Hz (for electrical isolation).
- 198162EA—120 Vac; 50/60 Hz.
- 198162GA—220 Vac; 50/60 Hz.
- 198162AA—120/208/240 Vac; 50/60 Hz.

Q7130A: Interface Module with selectable voltage ranges (4-7 Vdc, 6-9 Vdc, and 10.5-13.5 Vdc). Adapts motor to M71XX function.

Q7230A: Interface Module, selectable voltage or current control, with adjustable zero and span. Adapts motor to M72XX function.

Q7330A: Interface Module, for W936 Economizer applications. Adapts motor to M73XX function.

Q7630A: Interface Module, 14-17 Vdc control with minimum position capability. Adapts motor to M76XX function.

4074BYK: Controls up to 6 M91XX motors in unison from one Series 90 Controller.

4074EAU: Drives 2 or 3 M91XX motors from a W973 Single-zone Logic Panel or W7100 Discharge Air Controller.

4074EDC: Drives one M91XX motor from a 4-20 mA controller.

4074EED: Drives up to 4 M91XX motors from a 4-20 mA controller.

221508A Resistor Board—Plugs onto quick-connect terminals in wiring box of M91XX motor. Can be used in place of 4074BYK, EAU, EDC, or EED resistor kits (functions described above).

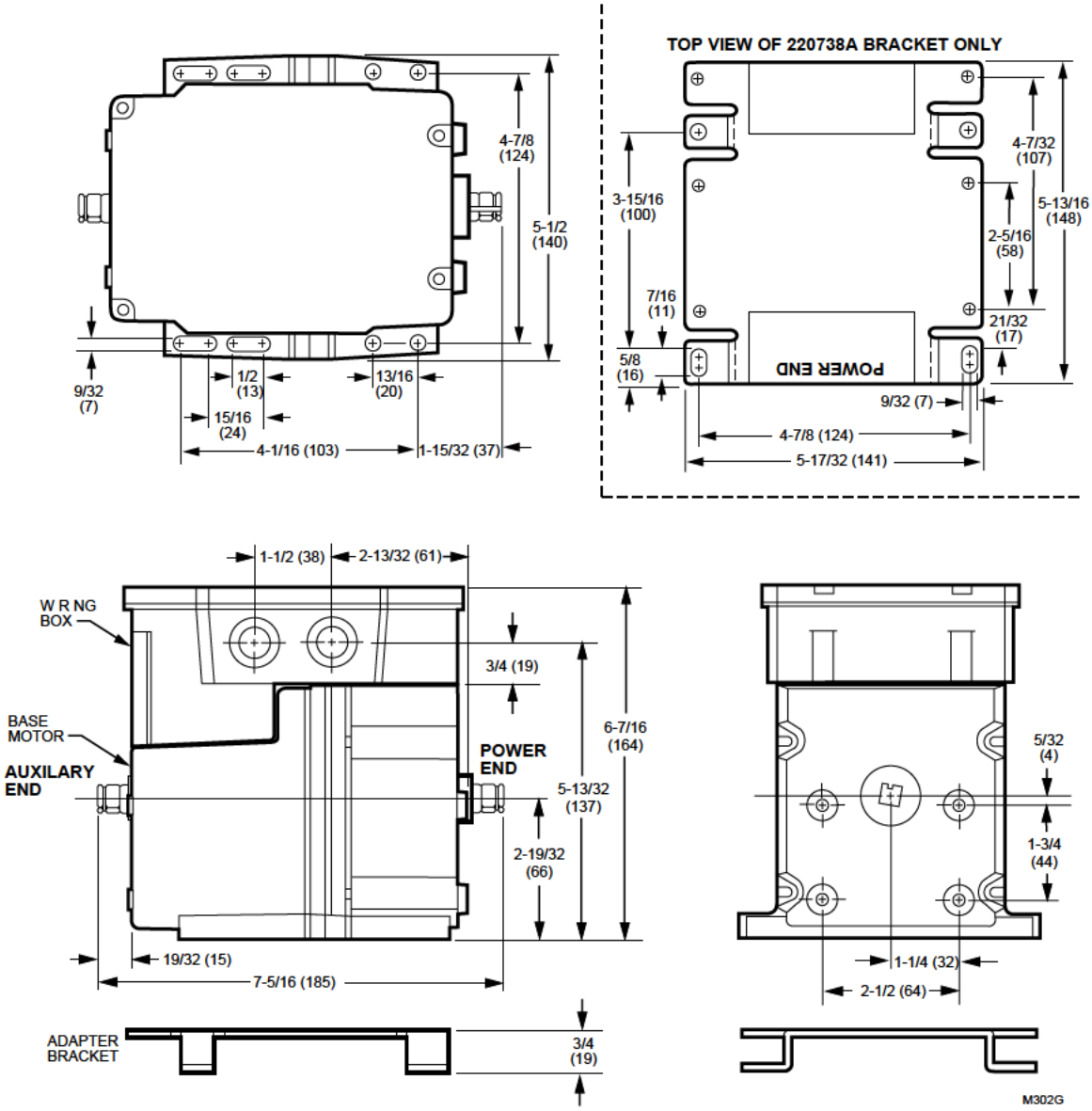

Fig. 1. M9164, M9174 dimensions in in. (mm)
NOTE: M9161, M9171 do not have auxiliary shaft. All other dimensions are the same.

Home and Building Control
Honeywell Inc.
Honeywell Plaza
P.O. Box 524
Minneapolis MN 55408-0524

Home and Building Control
Honeywell Limited-Honeywell Limitée
155 Gordon Baker Road
North York, Ontario
M2H 2C9

Honeywell Asia Pacific Inc.
Room 3213-3225
Sun Hung Kai Centre
No. 30 Harbour Road
Wanchai
Hong Kong

Honeywell Latin American Division
Miami Lakes Headquarters
14505 Commerce Way Suite 500
Miami Lakes FL 33016

Honeywell Europe S.A.
3 Avenue du Bourget
B-1140 Brussels Belgium

By using this Honeywell literature, you agree that Honeywell will have no liability for any damages arising out of your use or modification to, the literature. You will defend and indemnify Honeywell, its affiliates and subsidiaries, from and against any liability, cost, or damages, including attorneys' fees, arising out of, or resulting from, any modification to the literature by you.

Honeywell

Helping You Control Your World

63-1153—2 G.R. Rev. 5-96

Printed in U.S.A. on recycled paper
containing at least 10% post-consumer paper fibers

Honeywell

L4079A,B,W
PressureTrol® Limit Control

PRODUCT DATA



FEATURES

- **L4079A has two ganged spst switches; breaks two circuits (may be both sides of the power supply) simultaneously.**
- **L4079B has one spst switch.**
- **L4079W is the same as L4079B, but with seals for oil applications.**
- **MICRO SWITCH® snap-acting switches are visible through transparent cover.**
- **Switches open automatically, but must be reset manually.**
- **Trip-free reset mechanisms do not permit the limiting role of the PressureTrol® Control to be defeated by jamming the reset lever.**
- **Control does not need leveling.**
- **The L4079 is unaffected by moderate vibration.**

APPLICATION

The L4079A,B, and W PressureTrol® Limit Controls are high pressure limit switches which break electrical circuits when pressure rises to a preset value.

The L4079A and B can be used with steam, air, noncombustible gases, and fluids noncorrosive to the sensing element.

L4079W is for use on oil burner systems.

Contents

Application 1
Features 1
Specifications 2
Ordering Information 2
Installation 3
Wiring 3
Checkout 4

® U.S. Registered Trademark
© 2004 Honeywell International Inc.
All Rights Reserved

60-2156—1

SPECIFICATIONS

Models: See Table 1.
Pressure and Electrical Specifications:

Table 1. Pressure and Electrical Ratings.

Model Number	Range		Maximum Diaphragm Pressure		Ratings in Amperes			
					120 Vac		240 Vac	
	psi	kPa	psi	kPa	Full Load	Locked Rotor	Full Load	Locked Rotor
L4079A[a] and L4079B[b]	2 to 15	15 to 100	25	170	9.8	58.8	4.9	29.4
	5 to 50	35 to 350	85	590	9.8	58.8	4.9	29.4
	10 to 150	70 to 1035	225	1550	9.8	58.8	4.9	29.4
L4079B1066[b]	20 to 300	140 to 2070	350	2410	9.8	58.8	4.9	29.4
L4079W1000[b]	10 to 150	70 to 1035	225	1550	9.8	58.8	4.9	29.4

[a] Ratings apply to each of two separate circuits.
[b] One circuit only.

Switching Action:
L4079A—Snap-switch. Breaks two circuits automatically on pressure rise. Each circuit must be manually reset.
L4079B,W—Snap-switch. Breaks one circuit automatically on pressure rise. Circuit must be manually reset.

Adjustment means: External adjustment screw. Scale is calibrated in psi and kPa.

Maximum Ambient Temperature: 150°F (66°C).

Mounting Means:
Pipe fitting—1/4-18 NPT. Steam trap for mounting furnished on some models. These devices may be either boiler mounted directly to a boiler fitting, or may be surface mounted, such as on a wall, by using the knockouts in the case.

Approvals:
Underwriters Laboratories Inc. (UL) Listed: File No. MP466, Guide No. MBPR. For use in ambient temperatures normally prevailing in occupiable spaces, usually not higher than 77°F (25°C), but may be as high as 104°F (40°C) occasionally and for brief periods.

Accessories:
14026 Steam Trap.
33312B Knurled adjustment knob.

Dimensions: See Fig. 1.

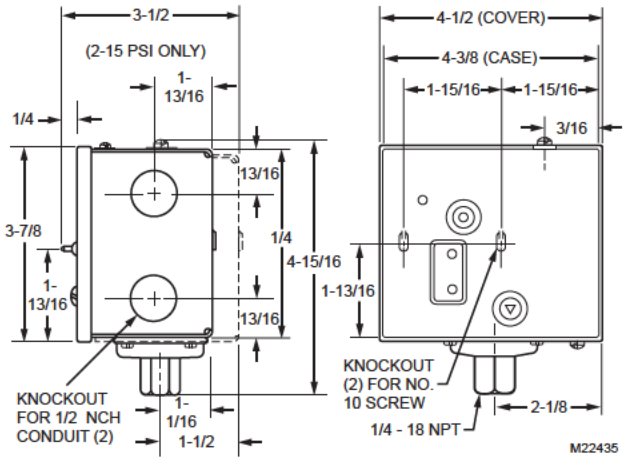

Fig. 1. L4079A,B,W PressureTrol® Limit Control dimensions in in.

ORDERING INFORMATION

When purchasing replacement and modernization products from your TRADELINE® wholesaler or distributor, refer to the TRADELINE® Catalog or price sheets for complete ordering number.

If you have additional questions, need further information, or would like to comment on our products or services, please write or phone:

1. Your local Honeywell Automation and Control Products Sales Office (check white pages of your phone directory).
2. Honeywell Customer Care
   1885 Douglas Drive North
   Minneapolis, Minnesota 55422-4386

In Canada—Honeywell Limited/Honeywell Limitée, 35 Dynamic Drive, Scarborough, Ontario M1V 4Z9.
International Sales and Service Offices in all principal cities of the world. Manufacturing in Australia, Canada, Finland, France, Germany, Japan, Mexico, Netherlands, Spain, Taiwan, United Kingdom, U.S.A.

INSTALLATION

When Installing This Product...

1. Read these instructions carefully. Failure to follow them could damage the product or cause a hazardous condition.
2. Check on the ratings given in the instructions and marked on the product to make sure the product is suitable for your application.
3. Installer must be a trained, experienced service technician.
4. After installation is complete, check out the product operation as provided in these instructions.

Location

PressureTrol® Limit Controllers must be mounted above the water line in steam boilers. They can be mounted alongside the pressure gauge, at a remote location, in a fitting provided by the boiler manufacturer, or in special mountings on low-water cutoffs.

Mounting

See Fig. 1 for mounting dimensions.

A steam trap must always be connected between the PressureTrol® unit and the boiler. The steam trap prevents boiler scale and corrosive vapors from attacking the diaphragm.

Pressure Gauge Mounting:

To mount the limit control beside a pressure gauge, remove the gauge and install in its place a steam trap with a tee on top. Mount the PressureTrol® unit and pressure gauge on the side of the tee by means of nipples and elbows.

Remote Mounting:

If excessive vibration seems likely to affect the operation of the control, it may be located remotely, as long as all piping is suitable and properly pitched to drain all condensation back to the boiler.

Boiler Mounting:

If it is not convenient to mount the control adjacent to the pressure gauge, install a steam trap at a location on the boiler recommended by the boiler manufacturer and screw the unit directly to the steam trap.

WIRING

⚠ WARNING

Electrical Shock Hazard.
Can cause severe injury, death or property damage.
Disconnect the power supply before beginning wiring. More than one power supply disconnect may be required.

All wiring must comply with local codes and ordinances. See Fig. 2 for internal schematics and wiring.

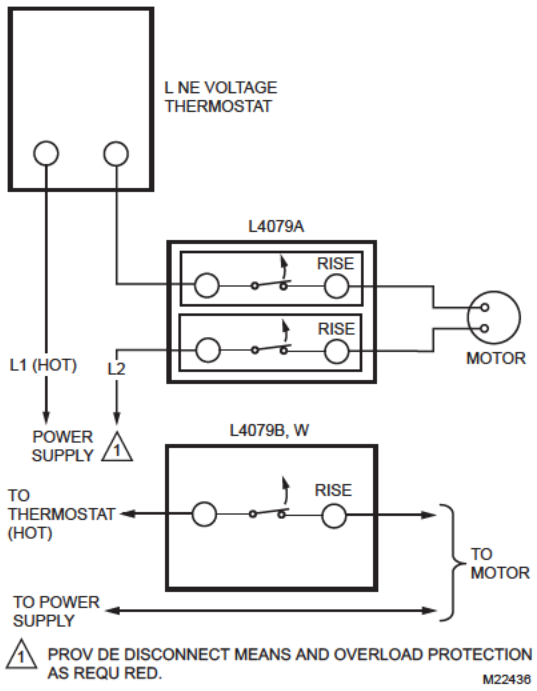

Fig. 2. Schematics and wiring. L4079A breaks both sides of power supply; L4079B,W breaks hot side only.

Setting

To set the control, turn the pressure adjusting screw (see Fig. 3) until the pressure setting indicator on the front of the case is in line with the required control pressure setpoint. The indicator setting is the point at which the switch breaks contact.

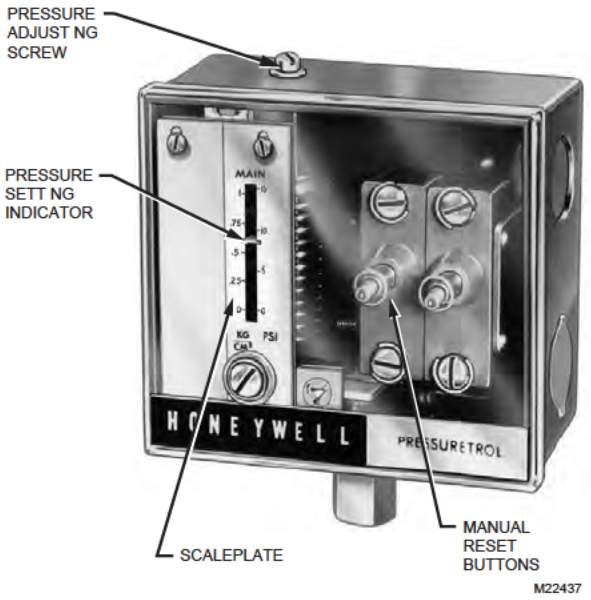

Fig. 3. Controls and indicators on L4079A. L4079B,W is the same except for having only one reset button.

Manual Resetting

When the circuits have broken automatically, they must be manually reset. After the pressure returns to normal, manually reset by depressing the manual reset button(s) firmly and releasing. The circuit is not complete until the reset button is released. The trip-free manual reset mechanism prevents the limit controller from operating as an automatic controller (self-resetting) even if the manual reset button has been tied down.

CHECKOUT

After the control has been installed and wired, test as follows:

Note the boiler pressure by checking the boiler pressure gauge (boiler pressure should be near the middle of the PressureTrol® pressure scale to perform this test properly).

Rotate the PressureTrol® pressure adjusting screw (see Fig. 3) until the pressure setting indicator on the front of the case corresponds to the boiler pressure gauge reading.

The limit control should break the control circuit(s) when the boiler pressure gauge reading equals or slightly exceeds the PressureTrol® pressure setting.

If the limit control is operating properly, manually reset it and adjust the pressure adjusting screw until the pressure setting indicator is in line with the required limit setpoint.

Honeywell

L91A,B,D Proportioning Pressuretrol® Controllers

PRODUCT DATA



APPLICATION

L91 Proportioning Pressuretrol® Controllers are Series 90 Modulating Pressure Controllers that provide direct control of modulating motors or valves used on automatic burners or steam heating systems.

FEATURES

- Models available for pressure systems up to 300 psi (2068 kPa).
- May be used with steam, air, noncombustible gases, or other fluids noncorrosive to brass or phos-bronze (300 psi model) bellows.
- When used with steam boilers, a steam trap (siphon loop) is recommended.
- Wiper on controller potentiometer moves in response to pressure changes.
- L91D has two potentiometers for unison control of two motors.
- L91B,D models have adjustable proportioning (throttling) range to allow selection of desired pressure control range.
- Adjustments made with screws on case top.
- Large, easily-read scaleplates in both U.S. customary (oz/sq. in., psi, or in. Hg) and metric (kPa, MPa, or mm Hg) units.
- Steel case with clear plastic cover to observe pressure settings and potentiometer action.
- Fitting with 1/4 -18 NPT threads allows rapid installation.
- Surface mount with screws through knockout holes in case back.

Contents

Application	1
Features	1
Specifications	2
Installation	5
Wiring	6
Checkout	8
Service Information	9

60-2152—08

SPECIFICATIONS

Table 1. Models available.

Operating Ranges[a]			Proportioning (Throttling) Range at Midscale				Maximum Surge Pressure	
Model	U. S. Customary Units	Metric Units	Potentiometer Part No.[b]	Adjustable	U. S. Customary Units	Metric Units	psi	kPa
L91A	0 to 15 psi	0 to 103 kPa	23176CB	No	0.5 psi	3.4 kPa 25	172	
	5 to 150 psi	0.03 to 1.03 MPa	23176CB	No	5 psi	0.03 MPa	225	1551
	10 to 300 psi[b]	0.07 to 2.07 MPa	23176CB	No	12 psi	0.08 MPa	350	2413
L91B	0 to 15 psi	0 to 103 kPa	23176CF	Yes	1.5 to 12 psi	10 to 83 kPa	25	172
	5 to 150 psi[c]	0.03 to 1.03 MPa	23176CB	Yes	5 to 23 psi	35 to 160 kPa	225	1551
	10 to 300 psi[c]	0.07 to 2.07 MPa	23176CB	Yes	12 to 48 psi	85 to 330 kPa	350	2413
	10 to 300 psi	0.07 to 2.07 MPa	23176CF	Yes	30 to 110 psi	0.21 to 0.76 MPa	350	2413
L91D	0 to 15 psi	0 to 103 kPa	23176CF	Yes	1.5 to 12 psi	10 to 83 kPa	25	172
	5 to 150 psi[c]	0.03 to 1.03 MPa	23176CF	Yes	13 to 52 psi	0.09 to 0.36 MPa	225	1551
	10 to 300 psi[c]	0.07 to 2.07 MPa	23176CF	Yes	30 to 110 psi	0.21 to 0.76 MPa	350	2413

Models (Table 1):
L91A: Single potentiometer; nonadjustable proportioning range.
L91B: Single potentiometer; adjustable proportioning range.
L91D: Two potentiometers allow unison control of motors; adjustable proportioning range.

Electrical Rating: 24 Vac.

Potentiometer Action: Wiper moves toward W on pressure rise, toward B on pressure fall. Potentiometer is field replaceable.

Potentiometer Resistance: 140 ohms (nominal) for L91A, B, and D models.

Pressure Sensing Element: Brass bellows, 10-300 psi models phos-bronze bellows.

Minimum Ambient Temperature: 32° F (0° C)

Maximum Ambient Temperature: 150° F (66° C)

Adjustment Means: Screws on controller case top; knurled knob for main scale setting on 10 to 300 psi (0.07 to 2.07 MPa) models.

Setpoint: At low pressure end of proportioning (throttling) range.

Main Scaleplate: Marked in both U.S. customary (oz/sq. in, psi, or in. Hg) and metric (kPa, MPa, or mm Hg) units.

Proportioning Range Scaleplate (L91B,D only): Graduated from A to F with a MIN (minimum) value below A. (See Table 2 for the value of each division.)

Mounting Means: Fitting on bellows has 1/4 - 18 NPT threads (external on 0 to 16 oz/sq. in., 0 to 4 psi, and 0 to 15 psi models; internal on all other models) for mounting on a pipe or steam trap (siphon loop).

NOTE: Some models are available with 1/4 - 19 BSP-TR internal threads; see Table 1.

Also can be surface mounted by screws through two knockout holes in case back.

ORDERING INFORMATION

When purchasing replacement and modernization products from your TRADELINE® wholesaler or distributor, refer to the TRADELINE® Catalog or price sheets for complete ordering number.

If you have additional questions, need further information, or would like to comment on our products or services, please write or phone:

1. Your local Honeywell Automation and Control Products Sales Office (check white pages of your phone directory).
2. Honeywell Customer Care
   1885 Douglas Drive North
   Minneapolis, Minnesota 55422-4386

In Canada—Honeywell Limited/Honeywell Limitée, 35 Dynamic Drive, Toronto, Ontario M1V 4Z9.
International Sales and Service Offices in all principal cities of the world. Manufacturing in Australia, Canada, Finland, France, Germany, Japan, Mexico, Netherlands, Spain, Taiwan, United Kingdom, U.S.A.

Electrical Connections: Internal screw terminals. Hole inside of case for 1/2 in. conduit.

Dimensions: See Fig. 1; see Fig. 2 for mounting steam trap (siphon loop).

Weight: 1 lb, 15 oz (0.88 kg).

Finish: Gray.

Replacement Parts:
129178 Thermoplastic Cover.
23176CB Potentiometer: For all L91A models and a few L91B models (see Table 1); 140 ohms (nominal); length of active winding is 7/64 in. (2.8 mm).
23176CF Potentiometer: For all L91D models and most L91B models (see Table 1); 140 ohms (nominal); length of active winding is 1/4 in. (6.4 mm).

Accessories:
50024585-001 Steam Trap (siphon loop): 1/4 in. brass pipe with 1/4 -18 NPT external threads on both ends.
14026 Steam Trap (siphon loop): 1/4 in. steel pipe with 1/4 -18 NPT external threads on both ends.
33312B Knurled Adjustment Knob: With setscrew; fits on main scale pressure adjusting screw.
4074BWJ Limit Stop Assembly: To limit setpoint ranges; includes 129564 Range Stop 107194 Range Stop Screw, and 23466 Wrench.

Table 2. Approximate value of each division (A to B, B to C, etc.) on proportioning (throttling) range scaleplate (L91B,D,F only)

Operating Range		Value of Each Division	
U.S. Customary Units	**Metric Units**	**U.S. Customary Units**	**Metric Units**
0 to 10 oz/sq in.	0 to 7 kPa	6.2 oz/ sq in.	2.7 kPa
0 to 15 psi	0 to 103 kPa	1.8 psi	12.4 kPa
5 to 150 psi (L91B)	0.03 to 1.03 MPa	7.8 psi	0.054 MPa
5 to 150 psi (L91D)	0.03 to 1.03 MPa	6.7 psi	0.046 MPa
10 to 300 psi (L91B with 7/64 in. potentiometer)	0.07 to 2.07 MPa	16.4 psi	0.113 MPa
10 to 300 psi (L91B,D with 1/4 in. potentiometer)	0.07 to 2.07 MPa	13.8 psi	0.095 MPa

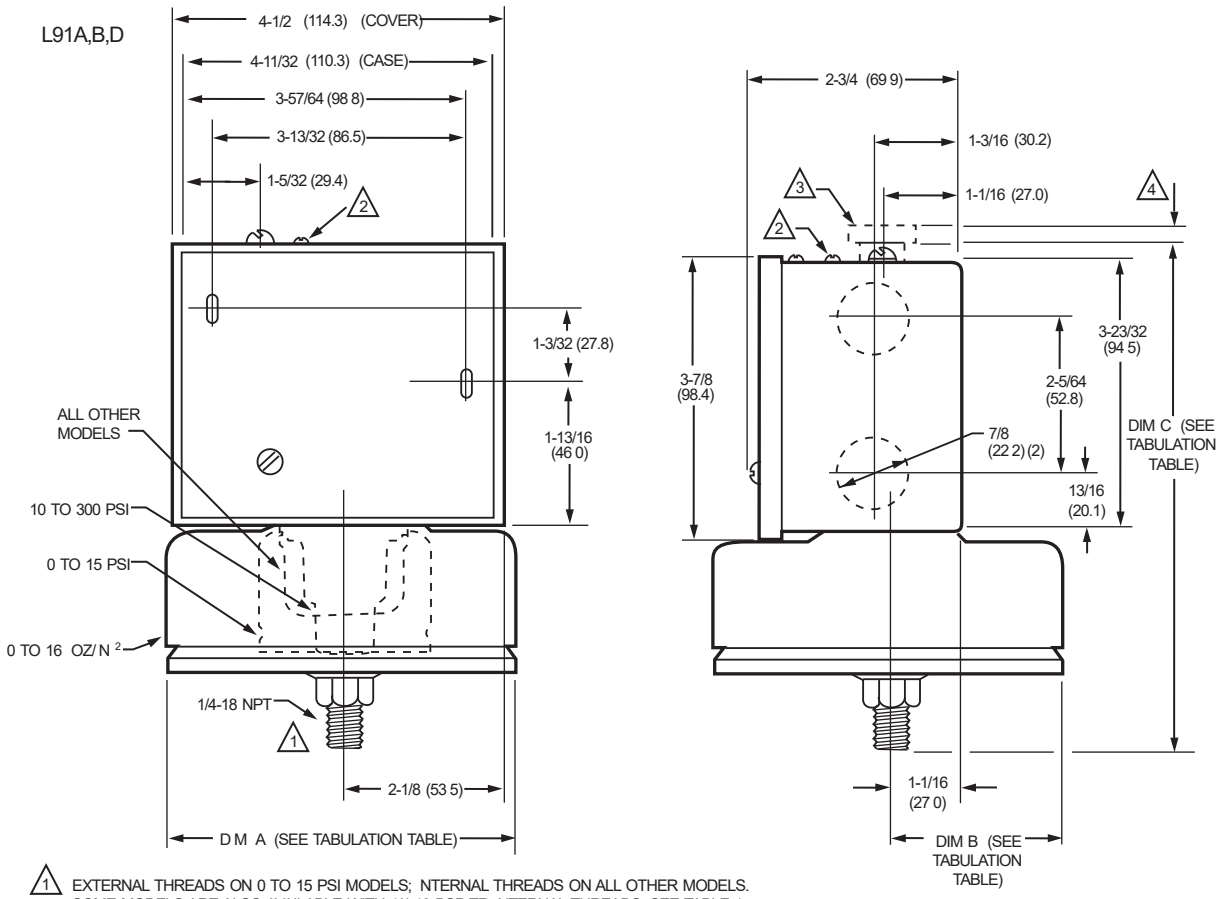

1 EXTERNAL THREADS ON 0 TO 15 PSI MODELS; NTERNAL THREADS ON ALL OTHER MODELS. SOME MODELS ARE ALSO AVAILABLE WITH 1/4-19 BSP-TR NTERNAL THREADS; SEE TABLE 1.

2 PROPORTIONING RANGE ADJUST NG SCREW ON L91B,D MODELS ONLY.

3 33312B KNURLED ADJUSTMENT SCREW KNOB, 7/8 N. [22 2 MM] DIAMETER,. KNOB IS NCLUDED WITH 10 TO 300 PSI [0.07 TO 07 MPa] MODELS; OPTIONAL ACCESSORY FOR OTHER MODELS.

4 FOR 10 TO 300 PSI [0 07 TO 2.07 MPa] MODELS. D M C NCLUDES THE KNURLED ADJUSTMENT KNOB.

TABULATION OF D MENSIONS A, B, AND C

OPERAT NG RANGE		D M A		D M B		D M C	
CUSTOMARY UNITS	METRIC UNITS	N.	MM	N.	MM	N.	MM
0 TO 15 PSI	0 TO 103 kPa	2-7/16	61 9	1-7/32	31 0	6-7/8	174 6
5 TO 150 PSI	0.03 TO 1.03 MPa	1-5/8	41 3	13/16	20 6	5-3/4	146.1
10 TO 300 PSI	0.07 to 2 07 MPa	1-1/4	31 8	5/8	15 9	6-1/16 4	154 0 4

M29781

Fig. 1. Mounting dimensions of the L91 Proportional Pressuretrol® Controllers, in in. (mm).

INSTALLATION

When Installing This Product...

1. Read these instructions carefully. Failure to follow them could damage the product or cause a hazardous condition.
2. Check the ratings given in the instructions and on the product to make sure the product is suitable for your application.
3. Installer must be a trained, experienced service technician.
4. After installation is complete, check out product operation as provided in these instructions.

⚠ WARNING

Electrical Shock Hazard.
Can cause severe injury, death or property damage.

1. Disconnect power supply before beginning installation to prevent electrical shock and equipment damage.
2. When using the controller with a compressor, install a dampening device (such as a needle valve, header, or surge tank) to dampen pulsations that can damage the controller or reduce its life.

IMPORTANT

1. *Locate the controller where the ambient temperature will not exceed 150° F (66° C).*
2. *When the controller is used on a boiler, be sure to connect a steam trap (siphon loop) between the controller and the boiler.*
3. *Before installing controller, be sure the siphon loop has enough water in it to fill lower trap.*
4. *Use pipe compound sparingly to avoid clogging the hole in the pipe or bellows fitting.*
5. *Do not tighten the controller by hand by holding onto the case and turning it.*

Location and Mounting

When used with steam boilers, always mount the controller above the water line in the boiler. A steam trap (siphon loop) must always be connected between the controller and the boiler (Fig. 2) to prevent boiler scale and corrosive vapors from attacking the bellows. Before installing controller, be sure the siphon loop has enough water in it to fill lower trap.

The controller can be mounted (1) beside the pressure gauge, (2) in a fitting on the boiler provided by the manufacturer, or (3) at a remote location in case of excessive vibration.

Make all pipe connections in accordance with approved standards. Use only a small amount of pipe compound to seal the connection joints. Excess pipe compound may clog the small hole in the fitting and prevent the controller from operating properly.

To avoid leaks and damage to the case, use a parallel jaw wrench on the controller fitting. Do not tighten the controller by hand by holding onto the case and turning it.

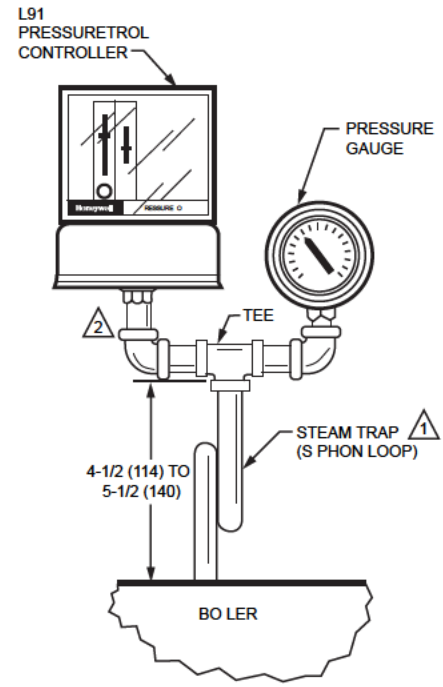

Fig. 2. Approximate dimensions in in. (mm) for mounting L91 Pressuretrol® Controller beside Pressure Gauge on Steam Trap (Siphon Loop).

Mounting Beside a Pressure Gauge

To mount the controller beside a pressure gauge (Fig. 2), remove the gauge. In its place, install a steam trap (siphon loop) with a tee on top. Using elbows and pipe nipples, mount the controller and pressure gauge on the ends of the tee.

Mounting on a Boiler

If it is not convenient to mount the controller beside the pressure gauge, install a steam trap (siphon loop) in the fitting provided by the boiler manufacturer. If there is no fitting, mount the steam trap at a location recommended by the boiler manufacturer. Screw the controller directly to the steam trap, if possible.

Mounting at a Remote Location

If there is excessive vibration at the boiler that may adversely affect the operation of the controller, mount the controller at a remote location. All piping from the boiler must be suitable and solidly mounted. The piping must be properly pitched to drain all condensation back to the boiler. If this causes the controller to be located at an inconvenient height (on large boilers), it may be mounted at a lower level if the connecting piping is filled with clean water. A steam trap (siphon loop) must be mounted between the remote piping and the controller.

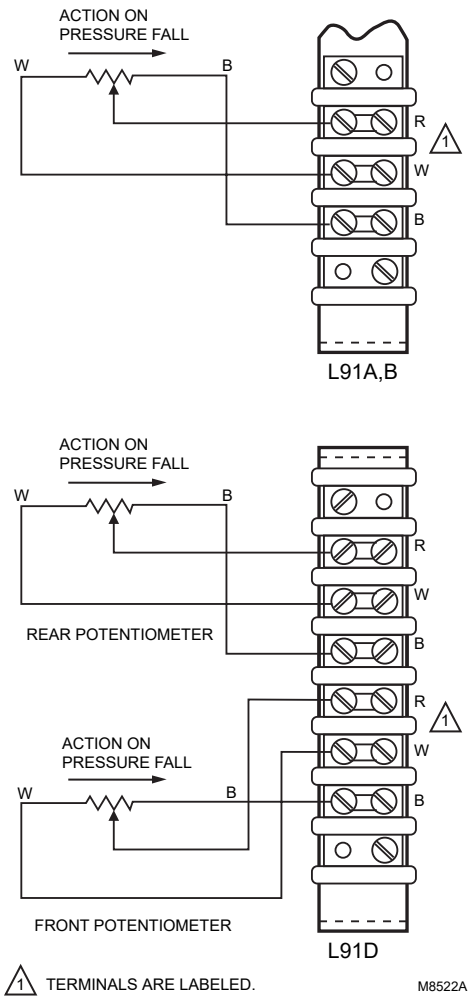

Fig. 3. L91 terminal blocks and internal schematics.

WIRING

1. Disconnect power supply before beginning installation to prevent electric shock and equipment damage. All wiring must comply with applicable electrical codes, ordinances, and regulations. Use NEC Class 1 (line voltage) wiring.
2. For normal installation, use moisture-resistant No. 14 wire suitable for at least 167°F (75°C) if you are using the controller with a flame safeguard primary control, or at least 194°F (90°C) if you are using it with a programming control.
3. For high temperature installations, use moisture-resistant No. 14 wire, selected for a temperature rating above the maximum operating temperature.
4. Disconnect the power supply before beginning wiring to prevent electrical shock and equipment damage.
5. All models have a terminal block inside the cover (Fig. 3) and two 7/8 in. (22.2 mm) holes in one side for 1/2 in. conduit, cable, or wires. Remove the front cover by loosening the screw at the bottom of the scaleplate.
6. Refer to Fig. 4 for typical hookup. W and B connections may be interchanged at the motor for reverse action (cooling). Follow the burner or boiler manufacturer's wiring diagram if provided. Also refer to the wiring diagrams in the motor instructions.
7. Replace the front cover when wiring is completed.

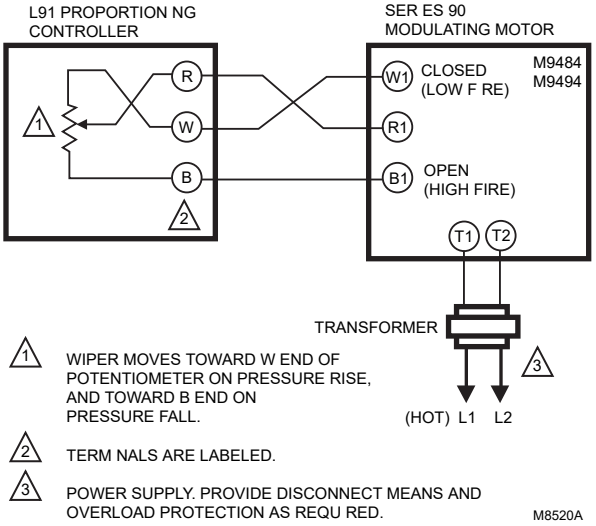

Fig. 4. Hookup of L91 Proportioning Pressuretrol® Controller to Series 90 Modulating Motor.

Setting

In all models, the proportioning range (also called throttling range) extends above the main scale setpoint (Fig. 5). The proportioning range is fixed on L91A models, but is adjustable on L91B,D models. (For values, refer to Table 1 in the Specifications section.)

Main Scale Set Point (All models)

Adjust the main scale setpoint for the desired operating pressure by turning the main scale adjusting screw (Fig. 7) or knurled adjustment knob on 10 to 300 psi (0.07 to 2.07 MPa) models, on the top of the case, until the main scale setting indicator is at the minimum pressure desired. The proportioning range extends above this value. The scaleplate is marked in both customary (oz/sq in., psi, or in. Hg) and metric (kPa, MPa, or mm Hg) units.

Use of L91 Proportioning Controller with Limit Controllers

The L91 main scale setpoint plus the value of the differential (proportioning range) must be less than or equal to the limit controller's (L404) main scale setpoint.

For example, to control system pressure between 70 and 80 psi: select an L91B, 5-150 psi operating range, adjustable differential (proportioning, throttling range) of 5 to 23 psi and an L404A, 10-150 psi, adjustable differential of 8 to 16 psi. Set the L404A main scale setpoint at 80 psi and its adjustable differential at 10 psi. The L404A settings will then provide boiler pressure limit control between 70 and 80 psi. An L91B differential (proportioning range) pressure of 5 psi is desired. Therefore, an L91B main scale setpoint of between 70 and 75 psi is required (L91 main scale setpoint plus its differential must be less than or equal to the limit controller main scale set

point). The L91B settings provide system modulation between 70 and 75 psi or between 75 and 80 psi, depending on the exact setting of the L91B main scale setpoint.

Due to device tolerances, the scaleplate settings are approximate and, therefore, the settings should be fine-tuned with the system operating.

Proportioning Range (L91B,D Only)

Adjust the proportioning range (throttling range) by turning the proportioning range adjusting screw (Fig. 6) on the top of the case until the proportioning range setting indicator is at the desired value. The proportioning range scale is graduated from A to F with a MIN (minimum) value below A. The value of each division depends on the operating range of the controller. Refer to Table 2 in the Specifications section.

Typical Operation

Pressure variations cause the bellows to expand or contract. Linkage between the bellows and the potentiometer wiper causes the wiper to move across the potentiometer windings. This varies the resistance between R and B, and between R and W, causing an unbalance in the circuit connected to the controller. See Fig 7.

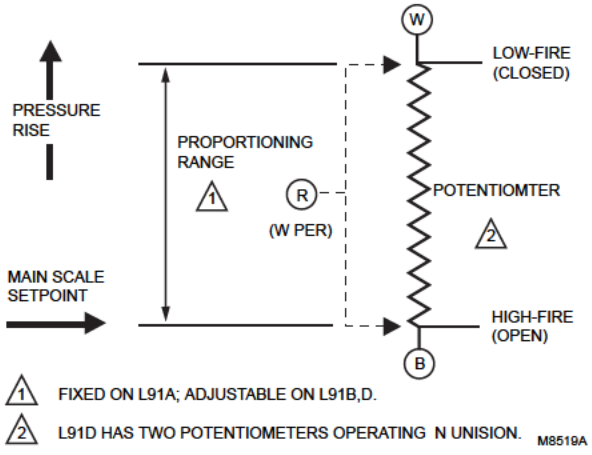

Fig. 5. L91A,B,D operating points.

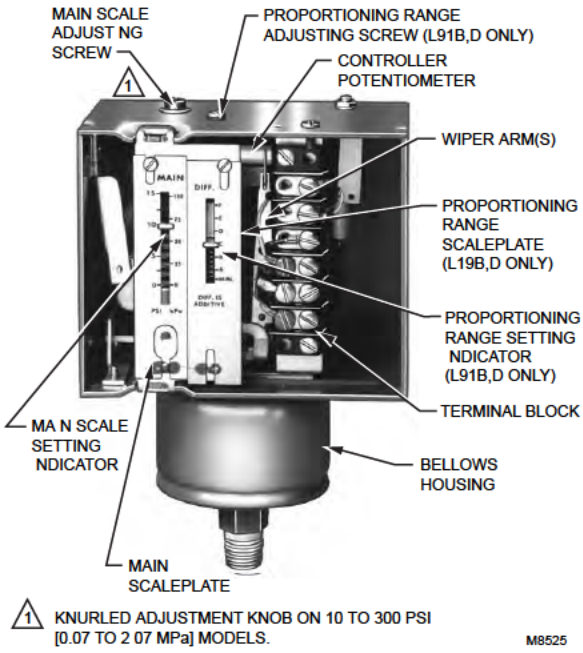

Fig. 6. Setting L91 Proportioning Pressuretrol® Controller.

A proportioning controller is used most often to regulate the firing rate of a burner by controlling a modulating motor (Fig. 4) or a modulating valve. The controller potentiometer, the feedback potentiometer in the motor (or in the valve actuator), and a balancing relay in the motor (or actuator) form an electric bridge circuit. As long as the pressure of the controlled medium remains at the setpoint of the controller, the circuit is balanced; that is, equal the relay contacts are open. When the circuit is balanced, the motor (or actuator) does not run.

If the pressure of the medium rises, the wiper in the controller moves toward W. This unbalances the circuit, so a larger current flows through one side of the balancing relay. The close contacts in the relay make, causing the motor (or valve actuator) to drive toward its closed position. As the motor (or actuator) runs, the wiper on the feedback potentiometer moves in a direction to balance the circuit. When the circuit is again in balance, the balancing relay contacts open and the motor (or actuator) stops. The valves and dampers connected to the motor or actuator will be partially closed, decreasing the firing rate and reducing the pressure.

Similarly, if the pressure of the controlled medium falls, the wiper on the controller potentiometer moves toward B, and the open contacts in the balancing relay make. The motor (or actuator) drives toward its open position until circuit balance is achieved. The valves and dampers will be opened wider and the firing rate will increase, thus increasing the pressure.

A small change in the pressure of the controlled medium will cause a change in the firing rate to compensate for it, thus keeping the pressure constant. This process is called modulation.

CHECKOUT

After the controller is installed, wired, and set, it should be tested with the system in operation. First, allow the system to stabilize. Then, observe the operation of the controller while raising and lowering its setpoint. Pressure should increase when the setpoint is raised and decrease when the setpoint is lowered. Use accurate pressure testing equipment when checking out the controller. Do not rely on inexpensive gauges. The controllers are carefully calibrated at the factory.

Make sure the modulating motor or modulating valve actuator reaches the low- and high-fire positions at the proper points. If the motor or actuator runs in the proper direction when the setpoint is adjusted, assume that the controller is operating properly. If it runs in the wrong direction, reverse the B and W wires. Observe the action of the motor or actuator until it stabilizes. If the motor or valve is moving constantly, widen the proportioning range (not adjustable on an L91A) incrementally until the system is stable.

If a Controller Seems to Operate Improperly

If the controller is suspected of operating improperly, it may be further checked by:

1. Leaving the controller installed where it is, but disconnecting all power to the controller motor or valve.
2. Loosening the cover screw below the main scaleplate and removing the cover.
3. Disconnecting the wires from the controller.
4. Connecting an ohmmeter between controller terminals B and W to measure the resistance for the potentiometer in the controller. The ohmmeter should read about 135 ohms for an L91A,B, or D.
5. Connecting the ohmmeter between controller terminals W and R (Fig. 8) and raising the setpoint of the controller above the actual pressure being measured. The ohmmeter should read the full value of the potentiometer measured in step 4 (135 ohms for an L91A,B, or D).
6. Slowly lowering the setpoint of the controller while observing the ohmmeter reading. The resistance should drop to zero at some setpoint below the actual pressure.
7. Making an approximation of the proportioning range by observing the change in setpoint required for a resistance change from zero to full value.
8. When the controller is operating properly, reconnecting the wires, replacing the cover, tightening the cover screw, and resetting the controller to the desired value.
9. Reconnecting power to the controlled motor or valve.

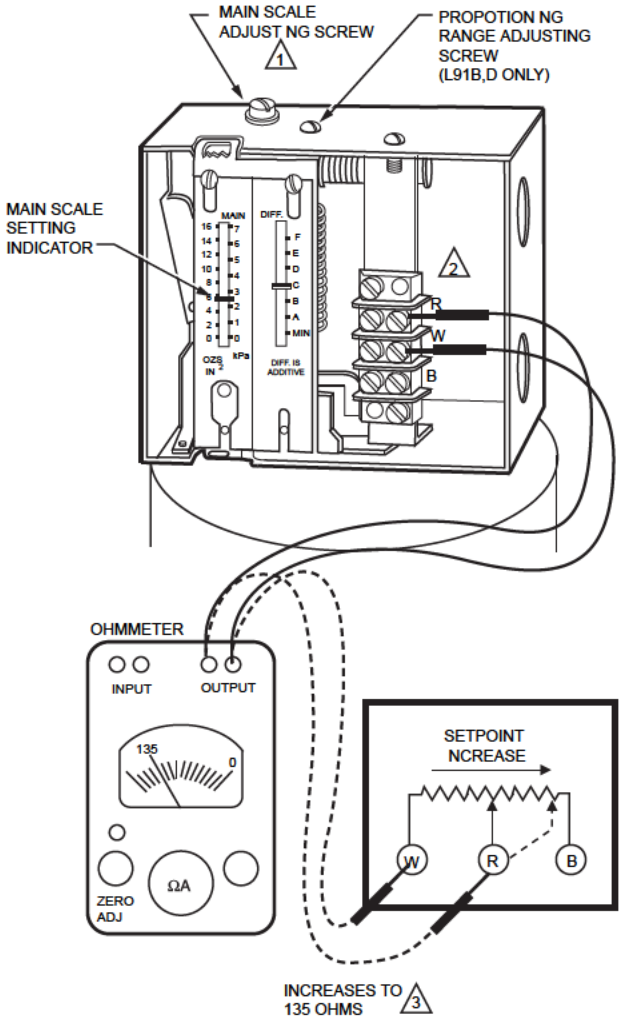

Fig. 7. Checking L91 Proportioning Pressuretrol® Controller.

⚠ CAUTION

Equipment Damage Hazard.
Failure to follow checkout instructions can damage components or systems.
Do not put the system into service until you have satisfactorily completed all applicable tests described in this Checkout section, all tests in the Checkout section of the applicable instructions, all tests for the flame safeguard control, and any tests required by the burner and boiler manufacturers.

SERVICE INFORMATION

⚠ CAUTION

Electrical Shock Hazard

1. Only qualified service technicians should attempt to service or repair flame safeguard controls and burner systems.
2. Disconnect power supply before cleaning the potentiometer windings or wiper, or before replacing the controller potentiometer.

Calibration

All controllers are carefully tested and calibrated at the factory under controlled conditions. If the actual operating pressure does not match the setpoint, move the main scaleplate slightly up or down until the setpoint agrees with the actual pressure.

Maintenance

Keep the cover of the controller in place at all times to protect the internal components from dirt, dust, and physical damage. Perform routine maintenance occasionally by inspecting and blowing or brushing away any accumulated dirt and dust. To assure proper functioning of the controller at all times, perform an operational check of the entire system during routine maintenance checks. Be sure to handle controllers carefully at the time of installation, during actual use, and during maintenance.

Cleaning the Potentiometer Windings or Wiper

Occasionally, the windings or wiper on the potentiometer (two on the L91D) may need cleaning. Disconnect the power supply before removing the cover from the controller and before cleaning the potentiometer.

IMPORTANT

1. *Use an electrical contact cleaner that does not contain solvents.*
2. *Use extreme care to avoid bending the wiper arm, changing the wiper tension and damaging the potentiometer windings.*
3. *Do not use an abrasion or burnishing tool to clean the potentiometer windings or wiper.*
4. *Do not use hard paper, such as a business card, or abrasive materials (sandpaper, emery boards, file, etc.) to clean the windings or wiper.*

Solvent-type electrical contact cleaners can deteriorate plastic components and wire insulation and leave an oily residue that accumulates particulate matter (dust, etc.). The residue can break down to form various carbonaceous substances that cause early potentiometer failure.

Use of abrasive materials results in wearing of the potentiometer windings and accumulation of particulate matter that changes the resistance between the windings and the wiper.

Replacing the Controller Potentiometer (Fig. 8–10)

IMPORTANT:

1. *Replace the controller potentiometer only when necessary to obtain proper operation.*
2. *When replacing the potentiometer, be very careful not to bend or damage the wiper arm, and not to change the wiper tension. Any damage or change in tension will decrease the life of the new potentiometer.*

1. Disconnect all power to the controller.
2. Loosen the cover screw below the main scaleplate and remove the cover.
3. Mark the wires to the external device (motor or valve actuator) and disconnect them from the terminal block.
4. Remove the screw holding the terminal block bracket to the top of the case (Fig. 8). Put this screw in a safe place because it will be needed later.
5. While careful not to damage the potentiometer wiper or any of the internal wiring, lift out the terminal block and bracket.
6. Before removing any potentiometer wires, carefully note and record (sketch) the position (off-center) of the active winding on the potentiometer and the location and connections of all wiring terminals. The new potentiometer must be inserted and connected the same.

Example: In Fig. 9, the active winding is on the left half of the potentiometer; the wire from the left end of the winding is connected to the (W) terminal on the terminal block, and the wire from the right end of the winding is connected to the (B) terminal on the terminal block.

7. Loosen the (W) and (B) screws on the terminal block, and remove the two wires to the active winding of the potentiometer. Leave the wire to the wiper arm intact.
8. Carefully unscrew the bolt that holds the potentiometer to the bracket. Make sure the potentiometer wires do not entangle with the wiper and bend it.
9. Carefully slide the old potentiometer off the bolt.
10. Carefully slide the bolt through the new potentiometer. Make sure that:
   a. The off-center position of the winding on the new potentiometer is the same as the old potentiometer. (Consult sketch in step 6.)
   b. The wiper will contact bare wires. (Rotate the potentiometer on the bolts so the surface of the winding where the brown enamel was removed is toward you.)
11. Screw the bolt into the potentiometer bracket. Make sure the wiper is contacting bare wires (step 10.b); then tighten the bolt.
12. Connect the two potentiometer wires to the (W) and (B) terminals on the terminal block and tighten the screws. Make sure these wires are connected to the same terminals as in the old potentiometer. (Consult sketch in step 6.)
13. Carefully fit the hole in the bottom of the terminal block bracket over the screw protruding upward from the bottom of the case (Fig. 10). Insert the screw (removed in step 4) through the hole in the top of the case (Fig. 8) and into the top of the bracket, and tighten it.
14. Reconnect the wires from the external device (motor or actuator) to the terminal block.
15. Replace the cover and tighten the cover screw.
16. Reconnect power to the controller.

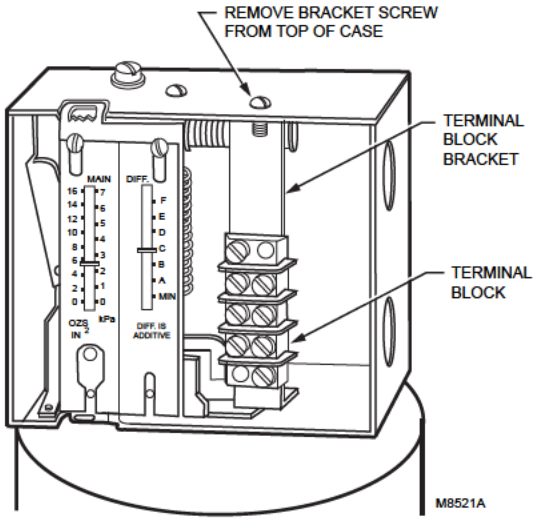

Fig. 8. Removing terminal block bracket.

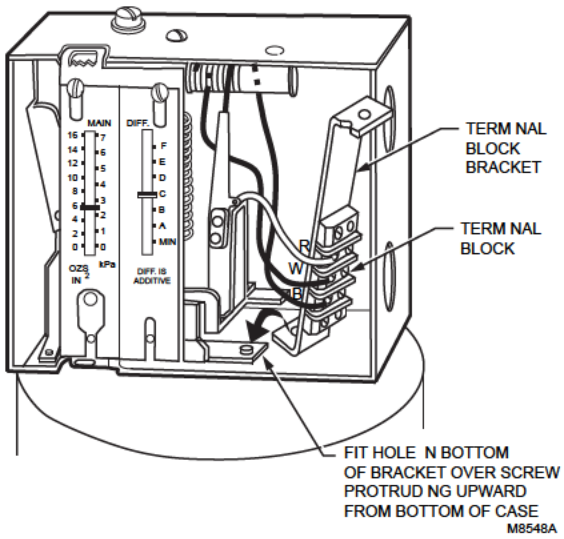

Fig. 10. Replacing terminal block bracket.

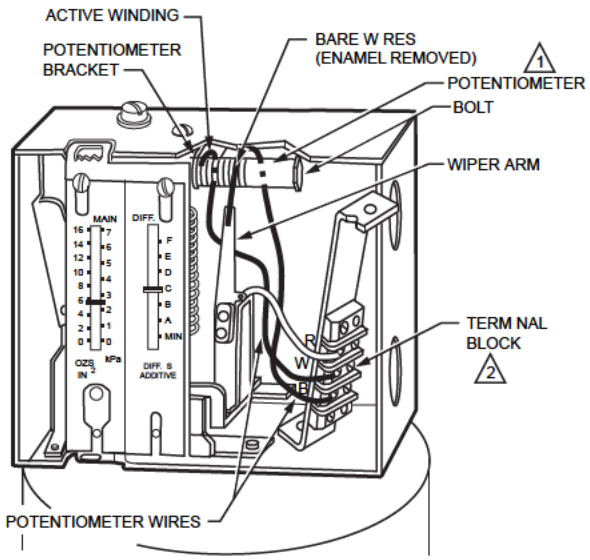

Fig. 9. Replacing potentiometer in L91.

EI Series Bimetal Thermometers



FEATURES

- *1% full span accuracy ASME B40.200 (ASME B40.3 Grade A)*
- *Maximum ambient temp. is 200°F (94°C)*
- *Hermetically sealed case to prevent entry of moisture, interior corrosion and coil freeze-up.*
- *External adjustment permits zero reset from outside the case.*
- *Maxivison® dial allows readability from any angle without parallax error.*
- *Silicone coil dampening (up to 400°F) provides vibration dampening and improves response time.*
- *All-welded stainless steel construction*
- *Heavy-Duty glass lens*
- *Protection NEMA 4X/IP66*
- *Five year limited warranty*

NEW OPTIONAL 316SS HOUSING & STEM AVAILABLE ON 5" EVERYANGLE

SPECIFICATIONS

Ashcroft® Series:	EI
Dial Sizes:	2,"3,"5"
Stem Length:	2½"-24" (1)
Case & Stem:	304 stainless steel, hermetically sealed
Stem Dia:	.250"
Window:	Heavy-duty glass, plastic or shatter-proof glass optional
Dial:	Maxivision®, black figures on white background
Pointer:	Black
Connection:	Plain, pointed plain, ¼ NPT, ½ NPT, ½ NPT union
Connection Location:	Everyangle™, Lower, Rear
Ranges:	–80/120°F-200/1000°F –50/50°C-100/500°C

Options:

Code	Description
C4	Individual calibration cert.
XCS	Dual scale(2)
XDM	Dial marking
XNH	Stainless steel tag
XNN	Paper tag
XPD	Plastic window
XSG	Shatter proof glass
X3B	⅜" stem dia. with ½ NPT
X02	¼ NPT when ½ NPT is standard
XS1	Silicone free
XYW	316SS Housing(4) and stem

(1) Special or longer length available, consult factory
(2) Dual scale avilable with 3" and 5" case only
(3) Only available on rear connection
(4) Only available on 5" Everyangle™ with 60" connection

Thermowells must be used on all pressure or velocity applications, to protect the stem of thermometer from corrosion and physical damage, and to facilitate removal of the thermometer without disturbing the process. Maximum ambient temperature is 200°F (95°C).

HOW TO ORDER

30 EI 60 R 040 0/250°F XNH

- **Dial Size:** 3" Code 30
- **Case Style:** EI
- **Stem Connection:** ½ NPT Code 60
- **Stem Location:** Rear Code R
- **Stem Length:** 4" Code 040
- **Range:** Code 0/250°F
- **Options:** Stainless steel tag

All specifications are subject to change without notice.
All sales subject to standard terms and conditions.
© Ashcroft Inc. 2015 06/2015

Ashcroft Inc., 250 East Main Street, Stratford, CT 06614 USA
Tel: 203-378-8281 • Fax: 203-385-0408
email: info@ashcroft.com • www.ashcroft.com

EI Series Bimetal Thermometers

EI Series selection table

Case Dial	Size Code	Style Code	Stem Conn.	Stem Code	Stem Location	Stem Lengths Available Code	"S" Length (inches)	Code	Temperature Range °F* Fahrenheit	°/Div.	Fig. Inter.	°C Celsius	°/Div.	Fig. Inter.
2″	20		Plain	40	Rear	R	2½	025	–80/120	2	20	–50/50	1	10
			Pointed	50					–20/120††			–20/120	2	20
			¼ NPT	60					30/130††	1	10	0/50††	1	5
3″	30		½ NPT Union	42	Everyangle	E	4	040	0/200	2	20	0/100	1	10
			½ NPT	60			6	060						
			½ NPT	60	Rear	R	9	090	0/250		50	10/150	2	20
					Lower	L	12	120	50/300			0/200		
5″	50		½ NPT Union	42	Everyangle	E	15	150	50/400	5	50	0/300††	5	50
			½ NPT	60			18	180	50/550			50/450**†		
							24	240	200/700†			100/500**†		
			½ NPT	60	Rear	R			100/800†					
					Lower	L			200/1000**†	10	100			

CONTACT FACTORY FOR ADDITIONAL STEM LENGTHS AND RANGES NOT LISTED

EI Dimensions

Case Series	Dial Size	Connection Location	A	B	C	D	E	G	H	S	NPT	Hex	Weight in ounces[3] S – 2½″
EI	2″	Rear (Plain)	2 3/32 (53)	3/8 (10)	3/8 (8)	–	–	–	–	–[2]	–	11/16	4½
EI	2″	Rear (Plain, pointed stem)	2 3/32 (53)	3/8 (10)	5/16 (8)	–	–	–	–	–[2]	–	11/16	4½
EI	2″	Rear (Threaded)	2 3/32 (53)	3/8 (10)	3/8 (8)	–	–	–	–	–[2]	¼	11/16	4½
EI	3″	Rear	3 5/32 (80)	19/32 (15)	3/8 (8)	–	–	–	–	–[2]	½	⅞	7
EI	3″	Lower	3 5/32 (80)	1 27/32 (47)	–	2⅝ (67)	¼ (6)	–	–	–[2]	½	⅞	11
EI	3″	Everyangle	3 5/32 (80)	19/32 (15)	–	–	–	1 21/32 (42)	3 1/32 (89)	–[2]	½	⅞	10
EI	5″	Rear	5 1/32 (128)	23/32 (18)	3/8 (8)	–	–	–	–	–[2]	½	⅞	16
EI	5″	Lower	5 1/32 (128)	1 15/16 (49)	–	3⅝ (92)	¼ (6)	–	–	–[2]	½	⅞	26
EI	5″	Everyangle	5 1/16 (128)	23/32 (18)	–	–	–	1⅛ (48)	3 21/32 (93)	–[2]	½	⅞	25

ΩΩΩΩΩΩ

1. Figures in parenthesis ( ) are in millimeters. All other dimensions are in inches.
2. Standard "S" dimensions are 2½, 4, 6, 9, 12, 15, 18 and 24 inches. Standard stem diameter is ¼ inch.
3. Add 1 oz. for every 2 inches of stem length.

EI Series dual scale ranges

Dual scales are available in 3″ and 5″ dial sizes in the following ranges:

Inner		Outer
80/120°F	and	60/50°C
40/120°F	and	40/50°C
40/160°F	and	40/70°C
20/120°F	and	30/50°C††
0/200°F	and	20/90°C
0/250°F	and	20/120°C
30/130°F	and	0/55°C††
50/300°F	and	10/150°C
50/400°F	and	10/200°C
50/550°F	and	10/290°C
100/800°F	and	50/400°C†
200/700°F	and	100/370°C†
200/1000°F	and	100/550°C**†

Overtemperature limits

Top of Range °F	Maximum Over TemperatuΩΩ
up to 250	100% of span
251/550	50% of span
551/1000	800°F **

*Dual scale ranges available for all standard °F ranges (3″ and 5″ case only)

**Satisfactory for continuous service up to 800°F or 425°C. Can be used for intermittent service from 800 to 1000°F, or 425 to 500°C. Use Ashcroft Duratemp® thermometers for ranges above and below those listed above.

†Minimum stem length for these ranges is 4″.

††Minimum stem length for lower connection and Everyangle is 4″.

DIMENSIONS

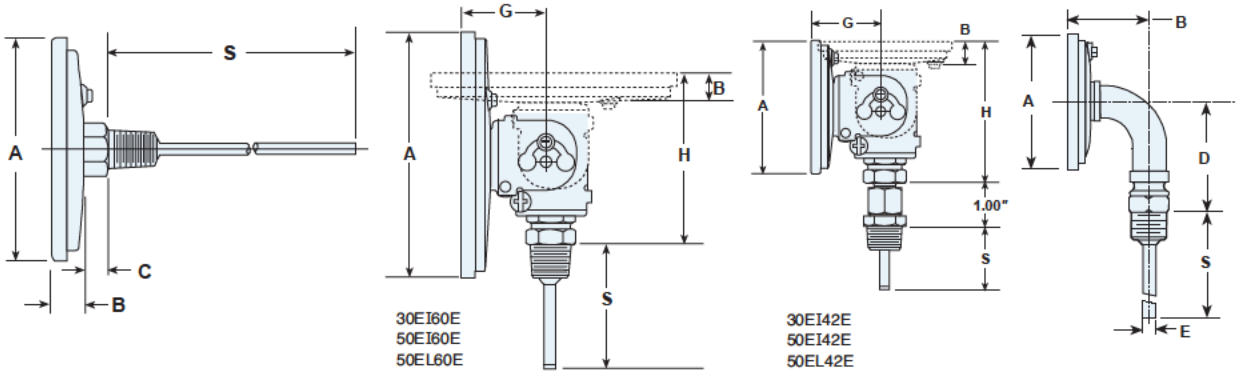

All specifications are subject to change without notice.
All sales subject to standard terms and conditions.
© Ashcroft Inc. 2015 06/2015

Ashcroft Inc., 250 East Main Street, Stratford, CT 06614 USA
Tel: 203-378-8281 • Fax: 203-385-0408
email: info@ashcroft.com • www.ashcroft.com

INSTALLATION AND MAINTENANCE INSTRUCTIONS FOR ASHCROFT® BIMETAL DIAL THERMOMETERS

ASHCROFT®

GENERAL

In removing the thermometer out of the packing box, handle it by the case or case outlet. Avoid handling it by the stem.

INSTALLATION OF THERMOMETERS

The thermometer should be mounted at any convenient location where it will be subjected to the average temperature variations to be indicated.

For an everyangle connection please refer to the reverse side of this document before beginning the installation.

Avoid bending the stem as this will cause misalignment of the internal parts, resulting in undue frictional errors.

To tighten the thermometer to the apparatus, use a wrench applied to the hexagon head of the threaded connection located just outside of the case.

INSTALLATION

Locate the stem so that at least two inches will be subjected to the average temperature to be measured.

Exposing the stem to a temperature in excess of the highest dial reading should be avoided.

The thermometer is normally provided with a threaded connection. To tighten the thermometer to the apparatus or into the well, use an open-end wrench applied to the hexagon head of the threaded connection.Turn until reasonably tight, then tighten still further in the same manner as a pipe elbow or similar pipe fitting until the scale is in the desired position for reading. DO NOT TIGHTEN BY TURNING THE THERMOMETER CASE. *Install the dry type thermometer so that the maximum case temperature is kept below 200°F at all times. Install the liquid filled type thermometer so that the maximum case temperature is kept below 150°F at all times.*

When a thermometer is equipped with a well, the well should be installed onto the apparatus first. The stem of the thermometer should then be coated with a heat conducting medium (a mixture of glycerin and graphite or vaseline or any other heavy lubricant may be used), after which the thermometer stem is inserted, and tightened into the well.

CAUTION:
Thermowells should be used on all pressurized applications, to protect the thermometer from corrosion or physical damage, and to facilitate removal of the thermometer without disturbing the process.

TESTING

Ashcroft Bimetal Dial Thermometers are carefully calibrated at the factory and under most operating conditions will retain their accuracy indefinitely. However, as in the case of all instruments, it is well to make periodic checks for accuracy against known standards.

ADJUSTMENT

If it is necessary to make an adjustment to the thermometer proceed as follows:

On thermometers fitted with an “External Adjustment” – Use a small wrench, small screwdriver or a coin to turn the slotted hexagon head in the back of the case until the pointer indicates the proper temperature on the dial.

MAINTENANCE OF DIAL THERMOMETERS

Aside from occasional testing, little or no maintenance is required.

Be sure that the gasketed glass cover is on the case at all times, as moisture and dirt inside the case will eventually cause the thermometer to lose its accuracy. (See caution note below.)

If the thermometer is used for measuring the temperature of a material that may harden and build up an insulating layer on the stem, the thermometer should be removed from the apparatus occasionally, and the stem cleaned. Observe this precaution to ensure the sensitivity of the instrument.

CAUTION:
Bimetal Thermometers operating below freezing must have a perfectly tight case to prevent entrance of moisture which eventually will condense and freeze inside the stem. This condition shows up as a failure of the thermometer to read accurately below 32°F or 0°C. For this reason it is important to avoid damage to the glass front while the stem temperature is at freezing or below. All thermometers are hermetically sealed in a dry atmosphere at the factory and require no further maintenance.

© 2011 Ashcroft Inc., 250 East. Main Street, Stratford, CT 06614-5145, USA Tel: 203-378-8281, Fax: 203-385-0499, www.ashcroft.com
All sales subject to standard terms and conditions of sale. I&M008-10187 Rev 05/11

Installation and Maintenance Instructions for ASHCROFT® Bimetal Thermometer with EVERYANGLE™ Conn.

ASHCROFT®

This thermometer was designed to be positioned to face the direction of easiest reading.

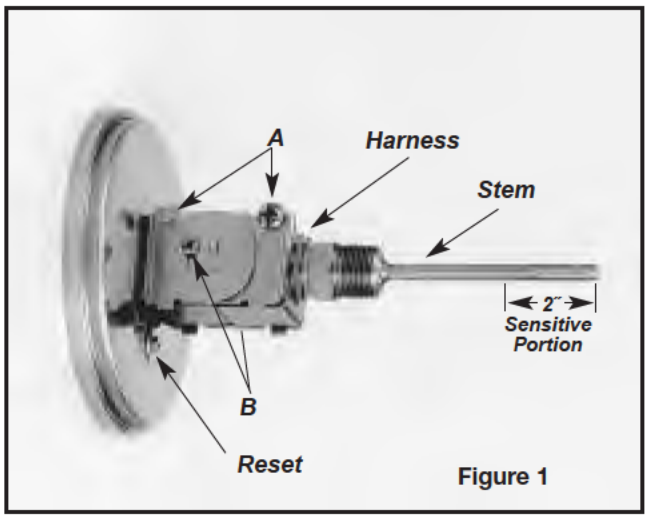

Figure 1

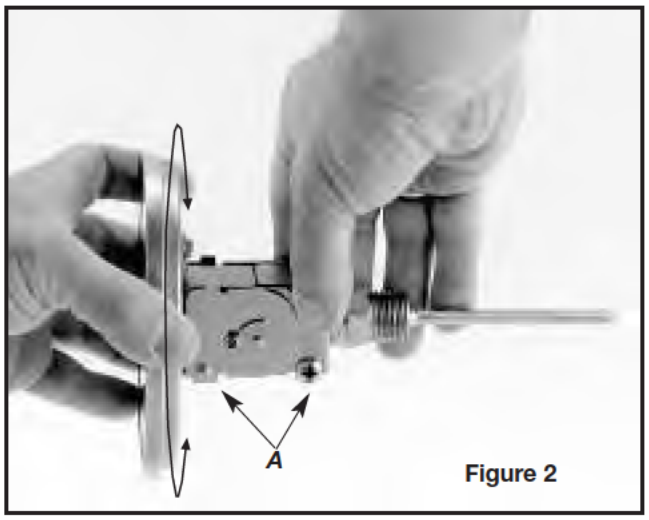

Figure 2

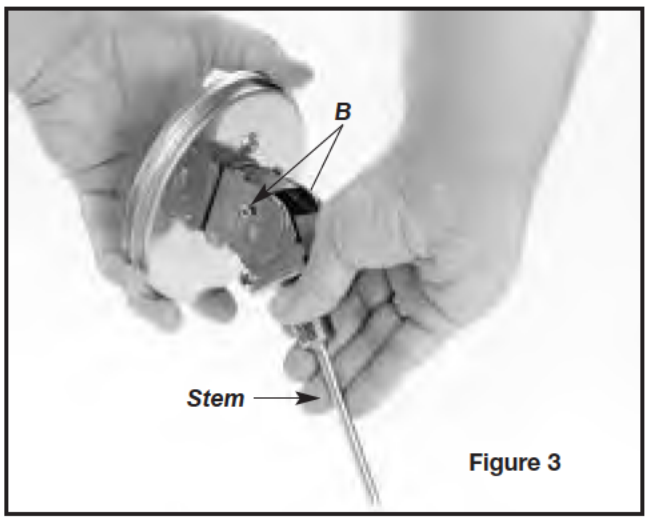

Figure 3

CAUTION: *To assure longest life, the "EVERY-ANGLE" joint should be operated only when necessary during installation or removal of the thermometer.*

POSITIONING THE STEM

Before installation, the stem should be set to the desired angle as follows:

Figure 1: Loosen the four screws labeled "A" and "B" in Figure 1, until the harness revolves freely without twisting the flexible housing.

Figure 2: While holding the case, revolve the harness clockwise or counterclockwise, as indicated by arrows in Figure 2, to place the harness in a position that will permit flexing the stem in the desired direction with respect to the case. Then lock the two screws labeled "A."

Figure 3: Flex the stem to the desired angle with respect to the face of the thermometer, as shown in Figure 3, then lock the two screws labeled "B."

INSTALLATION

The lower 2″ of the stem is the sensitive portion. Be sure this part of the stem is exposed to the temperature to be measured.

Tighten the thermometer to the apparatus or into the thermometer well, using an open-end wrench applied to the hexagon head of the connection bushing. Turn until reasonably tight, then tighten further (in the same manner as a pipe fitting) until the scale is in the desired position for reading.

DO NOT TIGHTEN BY TURNING THE THERMOMETER CASE OR THE HARNESS. INSTALL THE DRY TYPE EVERYANGLE THERMOMETER SO THAT THE MAXIMUM CASE TEMPERATURE IS KEPT BELOW 200°F. INSTALL THE LIQUID-FILLED TYPE EVERYANGLE THERMOMETER, SO THAT THE MAXIMUM CASE TEMPERATURE IS KEPT BELOW 150°F.

THERMOMETER WELLS

When the thermometer is equipped with a well, the well should first be removed from the thermometer and screwed into the apparatus.

© 2011 Ashcroft Inc., 250 East. Main Street, Stratford, CT 06614-5145, USA Tel: 203-378-8281, Fax: 203-385-0499, www.ashcroft.com
All sales subject to standard terms and conditions of sale. I&M008-10187 Rev 05/11

ASHCROFT®
Trust the shield.®

Type 1379 Duragauge® Pressure Gauge Available With *PLUS!™* Performance Option



- *4½″ full-size Bourdon tube*
- *Patented Duratube™ with as welded tube construction controls stress for longer life*
- *"Round Cap Tip" construction lowers stresses for longer life*
- *Micrometer adjustable pointer.*
- *Exclusive Teflon coated 400 series stainless steel rotary movement for longer life*
- ***PLUS!™** Performance Option:*
  - *Liquid-filled performance in a dry gauge*
  - *Fights vibration and pulsations without liquid-filled headaches*
  - *Order as option XLL*
- *Epoxy-coated system for superior corrosion resistance*

Type 1379 Duragauge® pressure gauge is offered in 4½,″ 6″ and 8½″ dials sizes.This rugged, solid-front aluminum case gauge is tops in its field. It is available as a weatherproof hermetically sealed or liquid-filled version in 4½″ and 6″ sizes in pressures to 30,000 psi. Like the 1279, it can be easily field converted from the weatherproof version to either the sealed or liquid-filled version using an optional kit. Ranges 50,000, 80,000 and 100,000 psi are available in 6″ hermetically sealed and liquid-filled cases. All cases are coated with black epoxy which will withstand most environmental conditions.

PRODUCT SPECIFICATIONS

Model Number:	1379
Accuracy:	½% full scale (Grade 2A, ASME B40.100)
Ranges:	Vacuum 100,000 psi*
Dial Size:	4½″, 6″, 8½″ diameter
Case Material:	Black, aluminum, solid front Ring:
4½″ & 6″ Dial:	Threaded reinforced black polypropylene
8½″ Dial:	Hinged, aluminum, black epoxy coated
Back Cover:	Polycarbonate
Weather Protection:	Dry Case: IP54 Liquid filled or hermetically sealed case: IP65
Window:	Glass
Dial:	Aluminum, white background, black pressure scale
Bourdon Tube (A)[1]	C510 Phos. bronze/brass
and Socket:	316L SS/Steel (R)[2] 316L SS/316L SS (S)[2] K Monel/ Monel (P)[2] Inconel 718 (WW)[2][3]
Pointer:	Micrometer adjustable
Movement:	Rotary, 400 SS, Teflon® coated pinion gear and segment
Conn. Size:	¼″, ½″ NPT, ¼″ high pressure for gauges 20,000 psi and above
Conn. Location:	Lower or back

PRODUCT OPTIONS

Fill:	L-Glycerin-Standard XGV-Silicone-Optional XGX-Halocarbon-Optional
PLUS!™	
Performance:	XLL
Hermetically Sealed, IP65:	H
Flush Mounting Ring:	X56
Receiver Gauge:	XPR
Shatter Proof Glass Window:	XSG
Acrylic Window:	XPD
Red Set Hand:	XSH
Max. Pointer:	XEP

[1] Joints silver brazed, [2] Joints welded, [3] See Bulletin DU-5 1379 HP

TEMPERATURE LIMITS

	Ambient	Process	Storage
Dry	–20/200°F[1] (–29/93°C)	–20/250°F[1] (–29/121°C)	–40/250°F (–40/121°C)
PLUS!	–40/150°F (–40/66°C)	–40/200°F (–40/93°C)	–40/150°F (–40/66°C)
LF (glycerin)	20/150°F (7/66°C)	20/150°F (7/93°C)	0/150°F (–18/66°C)
(silicone)	–40/150°F (–40/66°C)	–40/200°F (–40/93°C)	–40/150°F (–40/66°C)
(halocarbon)	–40/150°F (–40/66°C)	–40/200°F (–40/93°C)	–40/150°F (–40/66°C)

(1) Available for temperatures below –20°F, see Product Information page ASH/PI-21B for details.

Note: Other than discoloration of the dial and hardening of the gasketing that may occur as ambient or process temperatures exceeds 150°F, non-liquid-filled gauges with standard glass windows, can withstand continuous operating temperatures up to 250°F (121°C). Liquid-filled gauges can withstand 200°F (93°C) but glycerin fill and acrylic window will tend to yellow. Accuracy at temperatures above or below the reference ambient temperature of 68°F (20°C) will be affected by approximately .4% per 25°F. Gauges with welded joints will withstand 750°F (450°F (232°C) with silver brazed joints) for short times without rupture, although other parts of the gauge will be destroyed and calibration will be lost. For continuous use and for process or ambient temperatures above 250°F (121°C), a diaphragm seal or capillary or siphon is recommended.

STANDARD RANGE TABLE**

Pressure – psi		
Range	**Figure interval**	**Minor Graduation**
0/15	1	0.1
0/30	5	0.2
0/60	5	0.5
0/100	10	1
0/160	20	2
0/200	20	2
0/300	50	2
0/400	50	5
0/600	50	5
0/800	100	10
0/1000	100	10
0/1500	200	20
0/2000	200	20
0/3000	500	20
0/5000	500	50
0/6000	500	50
0/10,000	1000	100
0/20,000	2000	200
0/30,000	5000	200
0/50,000***	5000	500
0/80,000	10,000	1000
0/100,000	10,000	1000

*50,000, 80,000, & 100,000 psi ranges available with 6″ dial size only

**Full standard and metric equivalent range table available on our web site.

***See Bulletin DU-5 1379 HP

All specifications are subject to change without notice.
All sales subject to standard terms and conditions.
© Ashcroft Inc. 2017 Rev. A 06/17

Ashcroft Inc., 250 East Main Street, Stratford, CT 06614 USA
Tel: 203-378-8281 • Fax: 203-385-0408
email: info@ashcroft.com • www.ashcroft.com

Type 1379 Duragauge® Pressure Gauge Available With *PLUS!™* Performance Option

Compound				
Range	Figure Interval		Minor Grads	
	in Hg	psi	in Hg	psi
30˝ Hg/15 psi	5	3	0.5	0.2
30˝ Hg/30 psi	10	5	1	0.5
30˝ Hg/60 psi	10	10	1	1
30˝ Hg/100 psi	10	10	2	1
30˝ Hg/150 psi	10	20	5	2
30˝ Hg/200 psi	30	20	5	2
30˝ Hg/300 psi	30	50	5	2

Vacuum		
Range	Figure Interval	Minor Grads
30/0 in. Hg 34/0 ft H_2O	5 in 5 ft	0.2 in 0.5 ft

TYPE 1278M SERIES FLUSH MOUNTING RING

Used to flush mount gauge case. Standard finish is black; optional polished stainless steel finish is available.

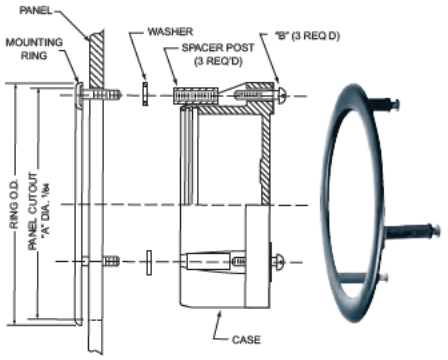

GAUGE SIZE	RING O.D.	"A" DIA.	"B" Size of 3 Screws	"C" Size of Washers	Spacer
4½	6 (152)	5⅝ (148)	#10-24 x 1⅝	7/16 x 17/64 x ⅝	1
6	7¾ (197)	7⅜ (185)	#¼-20 x 1	17/64 x ½ x 1/16	1 13/32

Dimensions

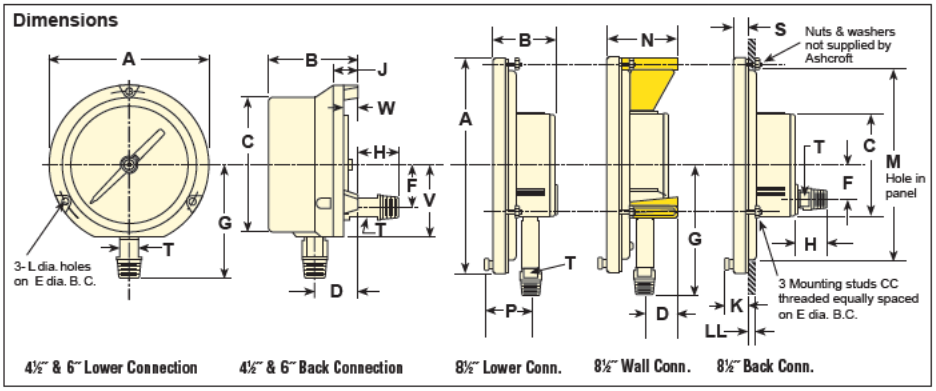

4½˝ & 6˝ Lower Connection | 4½˝ & 6˝ Back Connection | 8½˝ Lower Conn. | 8½˝ Wall Conn. | 8½˝ Back Conn.

Dial Size Inches	A	B	C	D	E	F	G	H	J	K	L	M	P	S	T	V	CC	LL	Wgt (lbs)
4½	5 13/16 (148)	3⅜ (86)	4⅞ (124)	1⅝ (41)	5⅜ (137)	1½ (42)	3 15/16 (100)	⅞ (20)	1 1/16 (27)	—	.218 (6)	—	2⅛ (54)	—	⅝ (16)	2⅝ (67)	—		2.5 (Dry) 3.5 (LF)
6	7 9/16 (192)	3½ (89)	6⅜ (162)	1⅝ (41)	7 (178)	1½ (42)	4½ (114)	⅞ (20)	1 1/16 (27)	—	.218 (6)	—	2⅛ (54)	—	⅝ (16)	2⅝ (67)	—	¼-½ (3)(13)	3.0 (Dry) 4.0 (LF)
8½	10 1/16 (256)	2⅞ (73)	4¾ (121)	1 1/16 (27)	9⅝ (244)	1⅝ (41)	6 (152)	1⅜ (35)	—	1 1/16 (27)	—	9 (228)	—	1 1/16 (17)	—	—	#10-24		4.5 (Dry) 5.5 (LF)

Order Coding Example

45	1379	S	S	04	L	XEPNH	100	#

SIZE	TYPE	SYSTEM (TUBE & SOCKET)	CASE DESIGN SOLID FRONT	PROCESS CONNECTION SIZE	CONNECTION LOCATION	OPTIONS (X VARIATIONS)(1)	RANGE	ENGINEERING UNITS(1)
(45) 4½ (60) 6 (85) 8½	1379	(A) Bronze tube, Brass socket(1) (P) K-Monel tube, Monel 400 socket(2) (R) 316L SS tube, steel socket (S) 316L(2) (1) Max pressure 1000psi (2) Max pressure 30,000psi	(S) Dry(IP54) (SH) Dry, Hermetically Sealed, Field Fillable (IP65) (SL) Liquid filled (glycerin standard) (IP65)	(02) 1/4 NPT male(1) (04) 1/2 NPT male(1) (09) 9/16-18 UNF-2B Aminco (standard for high pressure >20,000psi) (1) Max pressure 20,000psi	(B) Back (D) Side (3:00) (E) Side (9:00) (L) Lower (T) Top (12:00)	(GV) Silicone case fill (GX) Halocarbon case fill (NH) St. St. Wired Tag (TS) Throttle screw(2) (6B) Oxygen service (PD) Acrylic window (SG) Safety glass (EP) Maximum pointer, adjustable (SH) Red set hand, stationary (LL) *PLUS!* Performance (56) Flush mounting ring (C4) Individual calibration chart (1) Others on request (2) Standard with hermetically sealed or liquid filled gauge	See website for most common ranges offered	(#) PSI (BR)) Bar (KG) Kilograms/CM2 (KP) Kilopascal (IMV) Inches of Mercury Vacuum (1) See website for more units of measure

All specifications are subject to change without notice.
All sales subject to standard terms and conditions.
© Ashcroft Inc. 2017 Rev. A 06/17

Ashcroft Inc., 250 East Main Street, Stratford, CT 06614 USA
Tel: 203-378-8281 • Fax: 203-385-0408
email: info@ashcroft.com • www.ashcroft.com

ASHCROFT®

PRESSURE GAUGE INSTALLATION, OPERATION AND MAINTENANCE



I&M008-10098-5/02 (250-1353-L) Rev. 12/15

CONTENTS

		Page
1.0	**Selection and Application**	
1.1	Range	4
1.2	Temperature	4
1.3	Media	4
1.4	Oxidizing media	4
1.5	Pulsation/Vibration	4
1.6	Gauge fills	4
1.7	Mounting	4
2.0	**Temperature**	
2.1	Ambient Temperature	4
2.2	Accuracy	4
2.3	Steam service	4
2.4	Hot or very cold media	4
2.5	Diaphragm seals	5
2.6	Autoclaving	5
3.0	**Installation**	
3.1	Installation Location	5
3.2	Gauge reuse	5
3.3	Tightening of gauge	5
3.4	Process isolation	5
3.5	Surface mounting	5
3.6	Flush mounting	5
4.0	**Operation**	
4.1	Frequency of inspection	5
4.2	In-service inspection	5
4.3	When to check accuracy	5
4.4	When to recalibrate	5
4.5	Other considerations	5
4.6	Spare parts	5
5.0	**Gauge Replacement**	5
6.0	**Accuracy: Procedures/Definitions**	6
6.1	Calibration - Rotary movement gauges	7
7.0	**Diaphragm Seals**	
7.1	General	8
7.2	Installation	8
7.3	Operation	8
7.4	Maintenance	8
7.5	Failures	8
8.0	**Dampening Devices**	
8.1	General	8
8.2	Throttle Screws & Plugs	8
8.3	Ashcroft Pulsation Dampener	8
8.4	Ashcroft Pressure Snubber	8
8.5	Ashcroft Needle Valves	8
8.6	Chemiquip® Pressure Limiting Valves	8
9.0	**Test Equipment & Tool Kits**	
9.1	Pressure Instrument Testing Equipment	9
9.2	Tools & Tool Kits	9
9.3	Kits to Convert a Dry Gauge to a Liquid Filled or Weather Proof Case Gauge	9
9.4	2½ & 3½ 1009 Duralife® Gauge Tools	10
Appendix		
	Type 1188 Bellows Gauge Calibration Procedure	11
	Type 1009 Calibration Procedure (Vacuum-Previous Style)	12
	Type 1009 Calibration Procedure (Pressure-Previous Style)	13
	Type 1009 Calibration Procedure (Pressure & Vacuum-Current Style)	14
	Type 1279 & 1379 I&M Liquid Fill Conversion Instruction	15-16
	Type 1082 Calibration Procedure	17-18

Cover photo courtesy of Johnson/Yokogawa Co.

Chemiquip® is a registered trademark of Chemiquip Products Co. Inc.

1.0 SELECTION & APPLICATION

Users should become familiar with ASME B40.100 (Gauges – Pressure Indicating Dial Type – Elastic Element) before specifying pressure measuring gauges. That document – containing valuable information regarding gauge construction, accuracy, safety, selection and testing – may be ordered from:

ASME International
Three Park Avenue
New York, N.Y. 10016-5990
800-843-2763 (US/Canada)
001-800-843-2763 (Mexico)
973-882-1170 outside North America
email: infocentral@asme.org
www.asme.org

WARNING: To prevent misapplication, pressure gauges should be selected considering media and ambient operating conditions. Improper application can be detrimental to the gauge, causing failure and possible personal injury, property damage or death. The information contained in this manual is offered as a guide in making the proper selection of a pressure gauge. Additional information is available from Ashcroft Inc.

The following is a highlight of some of the more important considerations:

1.1 Range – The range of the instrument should be approximately twice the maximum operating pressure. Too low a range may result in (a) low fatigue life of the elastic element due to high operating stress and (b) susceptibility to overpressure set due to pressure transients that exceed the normal operating pressure. Too high a range may yield insufficient resolution for the application.

1.2 Temperature – Refer to Section 2 of this manual for important information concerning temperature related limitations of pressure gauges, both dry and liquid filled.

1.3 Media – The material of the process sensing element must be compatible with the process media. Use of a diaphragm seal with the gauge is recommended for process media that (a) is corrosive to the process sensing element; (b) contain heavy particulates (slurries) or (c) are very viscous including those that harden at room temperature.

1.4 Oxidizing media – Gauges for direct use on oxidizing media should be specially cleaned. Gauges for oxygen service should be ordered to variation X6B and will carry the ASME required dial marking "USE NO OIL" in red letters. Gauges for direct use on other oxidizing media may be ordered to variation X6W. They will be cleaned but carry no dial marking. *PLUS!*™ Performance gauges or Halocarbon filled gauge or diaphragm fill is required for use with oxidizing media; order variation XCF.

1.5 Pulsation/Vibration – Pressure pulsation can be dampened by several mechanisms; the patented *PLUS! Performance* gauge will handle the vast majority of applications. One exception to this is high frequency pulsation which is difficult to detect. The only indication may be an upscale zero shift due to movement wear. These applications should be addressed with a liquid filled gauge, or in extreme cases, a remotely mounted liquid filled gauge connected with a length of capillary line. The small diameter of the capillary provides excellent dampening, but can be plugged. The Ashcroft 1106 pulsation dampener and 1112 snubber are auxiliary devices which dampen pulsation with less tendency to plug.

1.6 Gauge fills. – Once it has been determined that a liquid filled gauge is in order, the next step is selecting the type of fill. **Glycerin** satisfies most applications. While being the least expensive fill, its usable temperature range is 20/180°F. **Silicone** filled gauges have a broader service range: –40/250°F. Oxidizing media require the use of **Halocarbon,** with a service range of –40/250°F. Pointer motion will be slowed at the low end of the low end of these temperature ranges.

1.7 Mounting – Users should predetermine how the gauge will be mounted in service: stem (pipe), wall (surface) or panel (flush). Ashcroft wall or panel mounting kits should be ordered with the gauge. See Section 3.

2.0 TEMPERATURE

2.1 Ambient Temperature – To ensure long life and accuracy, pressure gauges should preferably be used at an ambient temperature between –20 and +150°F (–30 to +65°C). At very low temperatures, standard gauges may exhibit slow pointer response. Above 150°F, the accuracy will be affected by approximately 1.5% per 100°F. Other than discoloration of the dial and hardening of the gasketing and degradation of accuracy, non-liquid filled Type 1279 (phenolic case) and 1379 (aluminum case) Duragauge® gauge, with standard glass windows, can withstand continuous operating temperatures up to 250°F. Unigauge models 2½″ and 3½″ 1009 and 1008S liquid filled gauges can withstand 200°F but glycerin fill and the acrylic window of Duragauge® gauges will tend to yellow. Silicone fill will have much less tendency to yellow. Low pressure, liquid filled Types 1008 and 1009 gauges may have some downscale errors caused by liquid fill expansion. This can be alleviated by venting the gauge at the top plug (pullout the blue plug insert). To do this the gauge must be installed in the vertical position.

Although the gauge may be destroyed and calibration lost, gauges can withstand short times at the following temperatures: gauges with all welded pressure boundary joints, 750°F (400°C); gauges with silver brazed joints, 450°F (232°C) and gauges with soft soldered joints, 250°F (121°C). For expected long term service below –20°F (–30°C) Duragauge® and 4½″ 1009 gauges should be hermetically sealed and specially lubricated; add "H" to the product code for hermetic sealing. Add variation XVY for special lubricant. Standard Duralife® gauges may be used to –50°F (–45°C) without modification.

2.2 Accuracy – Heat and cold affect accuracy of indication. A general rule of thumb for **dry gauges** is 0.5% of full scale change for every 40°F change from 75°F. Double that allowance for gauges with hermetically sealed or liquid filled cases, except for Duragauge® gauges where no extra allowance is required due to the elastomeric, compensating back. Above 250°F there may exist very significant errors in indication.

2.3 Steam service – In order to prevent live steam from entering the Bourdon tube, a siphon filled with water should be installed between the gauge and the process line. Siphons can be supplied with ratings up to 4,000 psi. If freezing of the condensate in the loop of the siphon is a possibility, a diaphragm seal should be used to isolate the gauge from the process steam. Siphons should also be used whenever condensing, hot vapors (not just steam) are present. Super heated steam should have enough piping or capillary line ahead of the siphon to maintain liquid water in the siphon loop.

2.4 Hot or very cold media – A five foot capillary line assembly will bring most hot or cold process media within the recommended gauge ambient temperature range. For media above

750°F (400°C) the customers should use their own small diameter piping to avoid possible corrosion of the stainless steel. The five foot capillary will protect the gauges used on the common cryogenic (less than –300°F (200°C) gases, liquid argon, nitrogen, and oxygen.) The capillary and gauge must be cleaned for oxygen service. The media must not be corrosive to stainless steel, and must not plug the small bore of the capillary.

2.5 Diaphragm seals – A diaphragm seal should be used to protect gauges from corrosive media, or media that will plug the instrument. Diaphragm seals are offered in a wide variety of designs and corrosion resistant materials to accommodate almost any application and most connections. Visit www.ashcroft.com for details.

2.6 Autoclaving – Sanitary gauges with clamp type connections are frequently steam sterilized in an autoclave. Gauges equipped with polysulfone windows will withstand more autoclave cycles than those equipped with polycarbonate windows. Gauges equipped with plain glass or laminated safety glass **should not be autoclaved.** Gauge cases should be vented to atmosphere (removing the rubber fill/safety plug if necessary) **before** autoclaving to prevent the plastic window from cracking or excessively distorting. If the gauge is liquid filled, the fill should be drained from the case and the front ring loosened before autoclaving.

3.0 INSTALLATION

3.1 Location – Whenever possible, gauges should be located to minimize the effects of vibration, extreme ambient temperatures and moisture. Dry locations away from very high thermal sources (ovens, boilers etc.) are preferred. If the mechanical vibration level is extreme, the gauge should be remotely located (usually on a wall) and connected to the pressure source via flexible tubing.

3.2 Gauge reuse – ASME B40.100 recommends that gauges not be moved indiscriminately from one application to another. The cumulative number of pressure cycles on an in-service or previously used gauge is generally unknown, so it is generally safer to install a new gauge whenever and wherever possible. This will also minimize the possibility of a reaction with previous media.

3.3 Tightening of gauge – Torque should never be applied to the gauge case. Instead, an open end or adjustable wrench should always be used on the wrench flats of the gauge socket to tighten the gauge into the fitting or pipe. NPT threads require the use of a suitable thread sealant, such as pipe dope or teflon tape, and must be tightened very securely to ensure a leak tight seal.

CAUTION: Torque applied to a diaphragm seal or its attached gauge, that tends to loosen one relative to the other, can cause loss of fill and subsequent inaccurate readings. Always apply torque **only** to the wrench flats on the lower seal housing when installing filled, diaphragm seal assemblies or removing same from process lines.

3.4 Process isolation – A shut-off valve should be installed between the gauge and the process in order to be able to isolate the gauge for inspection or replacement without shutting down the process.

3.5 Surface mounting – Also known as wall mounting. Gauges should be kept free of piping strains. The gauge case mounting feet, if applicable, will ensure clearance between the pressure relieving back and the mounting surface.

3.6 Flush mounting – Also known as panel mounting. The applicable panel mounting cutout dimensions can be found at www.ashcroft.com

4.0 OPERATION

4.1 Frequency of inspection – This is quite subjective and depends upon the severity of the service and how critical the accuracy of the indicated pressure is. For example, a monthly inspection frequency may be in order for critical, severe service applications. Annual inspections, or even less frequent schedules, are often employed in non-critical applications.

4.2 In-service inspection – If the accuracy of the gauge cannot be checked in place, the user can at least look for (a) erratic or random pointer motion; (b) readings that are suspect – especially indications of pressure when the user believes the true pressure is 0 psig. Any gauge which is obviously not working or indicating erroneously, should be immediately valved-off or removed from service to avoid a possible pressure boundary failure.

4.3 When to check accuracy – Any suspicious behavior of the gauge pointer warrants that a full accuracy check be performed. Even if the gauge is not showing any symptoms of abnormal performance, the user may want to establish a frequency of bench type inspection.

4.4 When to recalibrate – This depends on the criticality of the application. If the accuracy of a 3-2-3% commercial type gauge is only 0.5% beyond specification, the user must decide whether it's worth the time and expense to bring the gauge back into specification. Conversely if the accuracy of a 0.25% test gauge is found to be 0.1% out of specification then the gauge should be recalibrated.

4.5 Other considerations – These include (a) bent or unattached pointers due to extreme pressure pulsation; (b) broken windows which should be replaced to keep dirt out of the internals; (c) leakage of gauge fill; (d) case damage – dents and/or cracks; (e) any signs of service media leakage through the gauge including its connection; (f) discoloration of gauge fill that impedes readability.

4.6 Spare parts – As a general rule it is recommended that the user maintain in inventory one complete Ashcroft® instrument for every ten (or fraction thereof) of that instrument type in service.

5.0 GAUGE REPLACEMENT

It is recommended that the user stock one complete Ashcroft® instrument for every ten (or fraction thereof) of that instrument type in service. With regard to gauges having a service history, consideration should be given to discarding rather than repairing them. Gauges in this category include the following:

a. Gauges that exhibit a span shift greater than 10%. It is possible the Bourdon tube has suffered thinning of its walls by corrosion.

b. Gauges that exhibit a zero shift greater than 25%. It is likely the Bourdon tube has seen significant overpressure leaving residual stresses that may be detrimental to the application.

c. Gauges which have accumulated over 1,000,000 pressure cycles with significant pointer excursion.

d. Gauges showing any signs of corrosion and/or leakage of the pressure system.

e. Gauges which have been exposed to high temperature or exhibit signs of having been exposed to high temperature – specifically 250°F or greater for soft soldered systems; 450°F or greater for brazed systems; and 750°F or greater for welded systems.

f. Gauges showing significant friction error and/or wear of the movement and linkage.

g. Gauges having damaged sockets, especially damaged threads.

h. Liquid filled gauges showing loss of case fill.

NOTE: ASME B40.100 does not recommend moving gauges from one application to another. This policy is prudent in that it encourages the user to procure a new gauge, properly tailored by specification, to each application that arises.

6.0 ACCURACY: PROCEDURES/DEFINITIONS

Accuracy inspection – Readings at approximately five points equally spaced over the dial should be taken, both upscale and downscale, before and after lightly rapping the gauge to remove friction. **A pressure standard with accuracy at least four times greater than the accuracy of the gauge being tested is recommended.**

Equipment – A finely regulated pressure supply will be required. It is critical that the piping system associated with the test setup be leaktight. The gauge under test should be positioned as it will be in service to eliminate positional errors due to gravity.

Method – ASME B40.100 recommends that **known** pressure (based on the reading from the pressure standard used) be applied to the gauge under test. Readings including any error from the nominal input pressure, are then taken from the gauge under test. The practice of aligning the pointer of the gauge under test with a dial graduation and then reading the error from the master gauge ("reverse reading") can result in inconsistent and misleading data and should NOT be used.

Calibration chart – After recording all of the readings it is necessary to calculate the errors associated with each test point using the following formula: ERROR in percent = 100 times (TRUE VALUE minus READING) ÷ RANGE. Plotting the individual errors (Figure 1) makes it possible to visualize the total gauge characteristic. The plot should contain all four curves: upscale – before rap; upscale – after rap; downscale – before rap; downscale – after rap. "*Rap*" means lightly tapping the gauge **before** reading to remove friction as described in ASME B40.100.

Referring to Figure 1, several classes of error may be seen:

Zero – An error which is approximately equal over the entire scale. This error can be manifested when either the gauge is

FIG. 1

TYPICAL CALIBRATION CHART

INDICATED VALUE (PSI)

True Value – PSI	Increasing – Without RAP	Increasing – With RAP	Decreasing – Without RAP	Decreasing – With RAP
0	–.4	0	–.4	0
40	+.8	+1.0	+1.4	+1.1
80	+.4	+.5	+1.2	+1.0
120	–.4	–1.0	+.8	+.6
160	–.8	–.5	+.6	+.4
200	+.4	+.8	+.4	+.4

ERROR (% OF FULL SCALE)

True Value – % of Range	Increasing – Without RAP	Increasing – With RAP	Decreasing – Without RAP	Decreasing – With RAP
0	–.20	0	–.20	0
20	+.40	+.50	+.70	+.55
40	+.20	+.25	+.60	+.50
60	–.20	–.05	+.40	+.30
80	–.40	–.25	+.30	+.20
100	+.20	+.40	+.20	+.20

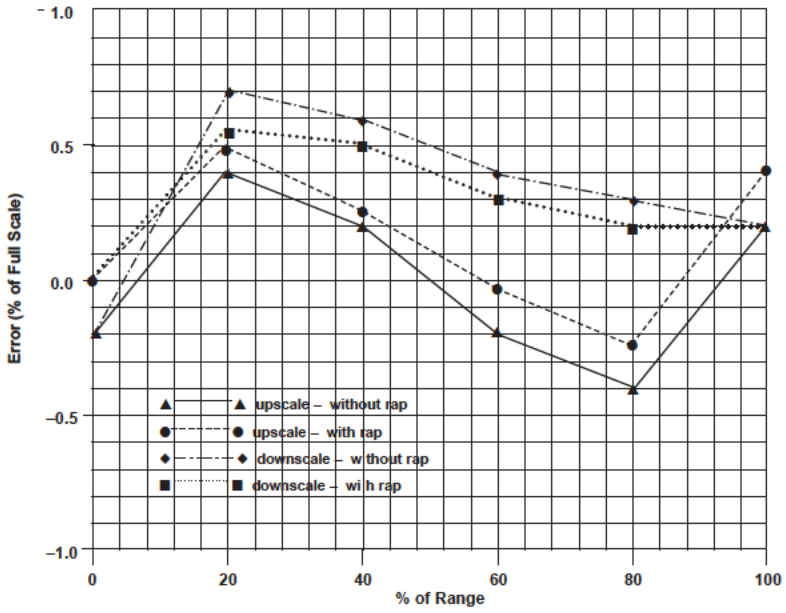

dropped or overpressured and the Bourdon tube takes a permanent set. This error may often be corrected by simply repositioning the pointer. Except for test gauges, it is recommended that the pointer be set at midscale pressure to "split" the errors.

Span – A span error exists when the error at full scale pressure is different from the error at zero pressure. This error is often proportional to the applied pressure. Most Ashcroft gauges are equipped with an internal, adjusting mechanism with which the user can correct any span errors which have developed in service.

Linearity – A gauge that has been properly spanned can still be out of specification at intermediate points if the response of the gauge as seen in Figure 1 (Typical Calibration Chart) is not linear. The Ashcroft Duragauge® pressure gauge is equipped with a rotary movement feature which permits the user to minimize this class of error. Other Ashcroft gauge designs (e.g., 1009 Duralife®) require that the dial be moved left or right prior to tightening the dial screws.

Hysteresis – Some Bourdon tubes have a material property known as hysteresis. This material characteristic results in differences between the upscale and downscale curves. This class of error can **not** be eliminated by adjusting the gauge movement or dial position.

Friction – This error is defined as the difference in readings before and after lightly tapping the gauge case at a check point. Possible causes of friction are burrs or foreign material in the movement gearing, "bound" linkages between the movement and the bourdon tube, or an improperly tensioned hairspring. If correcting these potential causes of friction does not eliminate excessive friction error, the movement should be replaced.

6.1 Calibration – Rotary Movement Gauges and Type 1259 Gauges – Inspect gauge for accuracy. Many times gauges are simply "off zero" and a simple pointer adjustment using the micrometer pointer is adequate. If inspection shows the gauge warrants recalibration to correct span and/or linearity errors, proceed as follows:

a. Remove ring, window and, if solid front case, the rear closure assembly.

b. Pressurize the gauge **once** to full scale and back to zero.

c. Refer to Figure 2 (Ashcroft System Assembly w/Rotary Gear Movement) for a view of a typical Ashcroft rotary system assembly with component parts identified. Refer to Figure 2A for link configuration of Type 1259 gauge.

FIG. 2 ASHCROFT SYSTEM ASSEMBLY W/ROTARY GEAR MOVEMENT

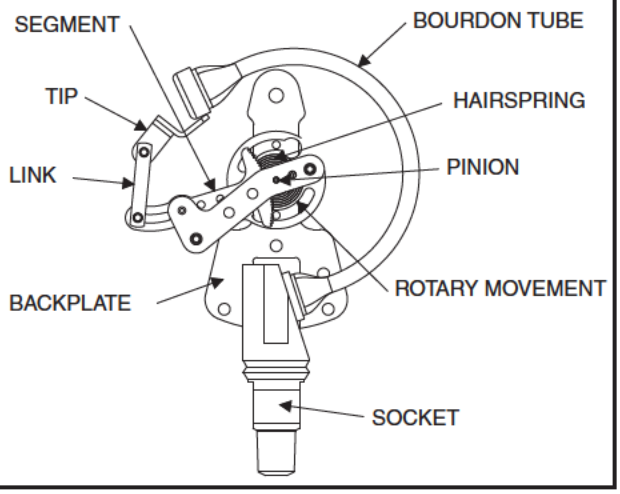

FIG. 2A ASHCROFT TYPE 1259 SYSTEM ASSEMBLY

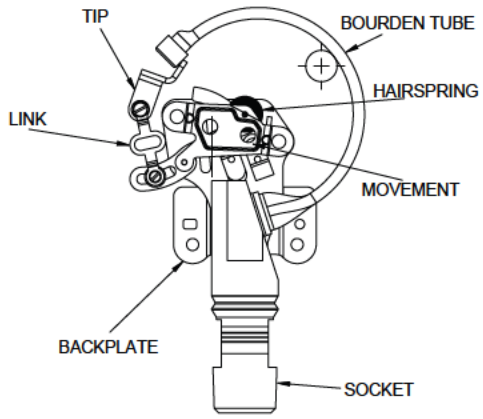

d. Adjust the micrometer pointer so that it rests at the true zero position. For open front gauges the pointer and dial must also be disassembled and the pointer should then be lightly pressed onto the pinion at the 9:00 o'clock position.

e. Apply full scale pressure and note the magnitude of the span error. With open front gauges, ideal span (270 degrees) will exist when at full scale pressure the pointer rests exactly at the 6:00 o'clock position.

f. If the span has shifted significantly (span error greater than 10%), the gauge should be replaced because there may be some partial corrosion inside the Bourdon tube which could lead to ultimate failure. If the span error exceeds 0.25%, loosen the lower link screw and move the lower end of the link toward the movement to increase span or away to decrease span. An adjustment of 0.004 inch will change the span by approximately 1%. This is a repetitive procedure which often requires more than one adjustment of the link position and the subsequent rechecking of the errors at zero and full scale pressure.

g. Apply midscale pressure and note error in reading. Even though the gauge is accurate at zero and full scale, it may be inaccurate at the midpoint. This is called linearity error. For corrections to linearity with the Type 1259 gauges refer to Figure 2B. For rotary movement gauges, note the following: if the error is positive, the movement should be rotated counter clockwise. Rotating the movement one degree will change this error by approximately 0.25%. Rotating the movement often affects span and it should be subsequently rechecked and readjusted if necessary according to step 6.1e and 6.1f.

FIG. 2B LINEARITY ADJUSTMENT & LINK CONFIGURATION FOR ASHCROFT TYPE 1259

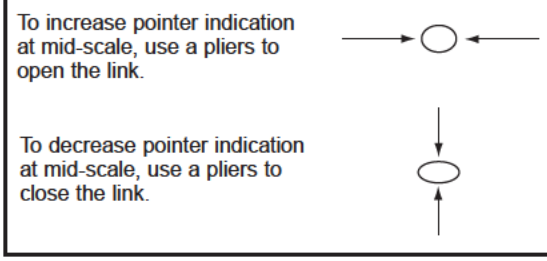

h. While recalibrating the gauge, the friction error – difference in readings taken with and without rap – should be

noted. This error should not exceed the basic accuracy of the gauge. If the friction error is excessive, the movement should be replaced. One possible cause of excessive friction is improper adjustment of the hairspring. The hairspring torque,or tension, must be adequate without being excessive. The hairspring should also be level, unwind evenly (no turns rubbing) and it should never tangle.

NOTES:

1 For operation of test gauge external zero reset, refer to page 17.

2 For test gauge calibration procedure, refer to Figure 2 on page 18.

7.0 DIAPHRAGM SEALS

7.1 General – A diaphragm seal (isolator) is a device which is attached to the inlet connection of a pressure instrument to isolate its measuring element from the process media. The space between the diaphragm and the instrument's pressure sensing element is solidly filled with a suitable liquid. Displacement of the liquid fill in the pressure element, through movement of the diaphragm, transmits process pressure changes directly to a gauge, switch or any other pressure instrument. When diaphragm seals are used with pressure gauges, an additional 0.5% tolerance must be added to the gauge accuracy because of the diaphragm spring rate.

Used in a variety of process applications where corrosives, slurries or viscous fluids may be encountered, the diaphragm seal affords protection to the instrument where:

- The process fluid being measured would normally clog the pressure element.
- Pressure element materials capable of withstanding corrosive effects of certain fluids are not available.
- The process fluid might freeze due to changes in ambient temperature and damage the element.

7.2 Installation – Refer to bulletin OH-1 for information regarding (a) seal configurations; (b) filling fluids; (c) temperature range of filling fluids; (d) diaphragm material pressure and temperature limits; (e) bottom housing material pressure and temperature limits; (f) pressure rating of seal assembly; (g) accuracy/temperature errors of seal assembly; (h) diaphragm seal displacement. The volumetric displacement of the diaphragm must at least equal the volumetric displacement of the measuring element in the pressure instrument to which the seal is to be attached.

It is imperative that the pressure instrument/diaphragm seal assembly be **properly** filled prior to being placed in service. Ashcroft diaphragm seal assemblies should only be filled by a seal assembler certified by Ashcroft Inc. Refer to section 3.3 for a cautionary note about not applying torque on either the instrument or seal relative to the other.

7.3 Operation – All Ashcroft® diaphragm seals, with the exception of Type 310 mini-seals, are continuous duty. Should the pressure instrument fail, or be removed accidentally or deliberately, the diaphragm will seat against a matching surface preventing damage to the diaphragm or leakage of the process fluid.

7.4 Maintenance – Clamp type diaphragm seals – Types 100, 200 and 300 – allow for replacement of the diaphragm or diaphragm capsule, if that ever becomes necessary. The Type 200 top housing must also be replaced with the diaphragm. With all three types the clamping arrangement allows field disassembly to permit cleaning of the seal interior.

7.5 Failures – Diaphragm failures are generally caused by either corrosion, high temperatures or fill leakage. Process media build-up on the process side of the diaphragm can also require seal cleaning or replacement. Consult Customer Service, Stratford CT for advice on seal failures and/or replacement.

WARNING: All seal components should be selected considering process and ambient operating conditions to prevent misapplication. Improper application could result in failure, possible personal injury, property damage or death.

8.0 DAMPENING DEVICES

8.1 General – Some type of dampening device should be used whenever the pressure gauge may be exposed to repetitive pressure fluctuations that are fairly rapid, high in magnitude and especially when transitory pressure spikes exceeding the gauge range are present (as with starting and stopping action of valves and pumps). A restricted orifice of some kind is employed through which pressure fluctuations must pass before they reach the Bourdon tube. The dampener reduces the magnitude of the pressure pulse thus extending the life of the Bourdon tube and movement. This reduction of the pressure pulsation as "seen" by the pressure gauge is generally evidenced by a reduction in the pointer travel. If the orifice is very small the pointer may indicate the average service pressure, with little or no indication of the time varying component of the process pressure.

Commonly encountered media (e.g. – water and hydraulic oil) often carry impurities which can plug the orifice over time thus rendering the gauge inoperative until the dampener is cleaned or replaced.

Highly viscous media and media that tend to periodically harden (e.g., asphalt) require a diaphragm seal be fitted to the gauge. The seal contains an internal orifice which dampens the pressure fluctuation within the fill fluid.

8.2 Throttle Screws & Plugs – These accessories provide dampening for the least cost. They have the advantage of fitting completely within the gauge socket and come in three types: (a) a screwed-in type which permits easy removal for cleaning or replacement; (b) a pressed in, non-threaded design and (c) a pressed in, threaded design which provides a highly restrictive, helical flow path. Not all styles are available on all gauge types.

8.3 Ashcroft Pulsation Dampener – Type 1106 Ashcroft pulsation dampener is a moving pin type in which the restricted orifice is the clearance between the pin and any one of five preselected hole diameters. Unlike a simple throttle screw/plug, this device has a self-cleaning action in that the pin moves up and down under the influence of pressure fluctuations.

8.4 Ashcroft Pressure Snubber – The heart of the Type 1112 pressure snubber is a thick porous metal filter disc. The disc is available in four standard porosity grades.

8.5 Ashcroft Needle Valves – Type 7001 thru 7004 steel needle valves provide varying degrees of dampening. These devices, in the event of plugging, can easily be opened to allow the pressure fluid to clear away the obstruction.

8.6 Chemiquip® Pressure Limiting Valves – Model PLV-255, PLV-2550, PLV-5460, PLV-5500 and PLV-6430, available with and without built-in snubbers, automatically "shut off" at adjustable preset values of pressure to protect the gauge from damage to overpressure. They are especially useful on hydraulic systems wherein hydraulic transients

(spikes) are common.

9.0 TEST EQUIPMENT & TOOL KITS

See our website www.ashcroft.com for more details

9.1 Pressure Instrument Testing Equipment

Type 1305D Deadweight Tester

Type 1327D Pressure Gauge Comparator

Type 1327CM "Precision" Gauge Comparator

9.2 Tools & Tool Kits For Recalibration of 4½" and Larger Gauges

Type 2505 universal carrying case for 1082 test gauge

Type 266A132-01 span wrench for 1082 test gauge

Type 1281 socket O-Ring kit for 1279/1379 lower connect

Type 1285 4½" ring wrench for 1279/1379 lower & back connect

Type 1286 6" ring wrench for 1379 lower & back connect

Type 3220 pointer puller (all gauges except 1009 Duralife®)

Type 3530 pinion back-up tool for 1009 Duralife®

Type 3220 Handjack set

Type 1105 Tool Kit

9.3 Kits to Convert a Dry Gauge to a Liquid Filled or Weather Proof Case Gauge

Type 1280 conversion kit for 4½" lower connect 1279/1379

Type 1283 conversion kit for 4½" back connect 1279/1379

Type 1284 conversion kit for 6" lower & back connect



TYPE 1105
TOOL KIT



TYPE 3220
HAND JACK SET

9.4 2½ & 3½ 1009 Duralife® Gauge Tools

Description	Part No.
Pointer Puller Screw/Pin[2][3][4]	112A381-01
Pointer Puller Body[2][3][4]	292A133-01
Pointer Staker[2][4]	188A101-01
Span Wrench[2][5] (to adjust span)	266A137-01
Ring Wrench 3½″[1][5] (for ring removal) (35 1009)	266B134-01
Ring Wrench 2½″[1][5] (for ring removal) (25 1009)	266B135-01
Nest 2½″ & 3½″[1][5] (to hold gauge for ring removal) (25/35 1009)	266B136-01
Ring Removal Tool[6] (25 1009)	101B221-02
Ring Removal Tool[6] (35 1009)	101B221-01
Nest 2½″[6] (to hold gauge for ring removal) (25 1009)	101B220-02
Nest 3½″[6] (to hold gauge for ring removal) (35 1009)	101B220-01
Type 1230 throttle plug insertion (¼ NPT) for 1009 Duralife®)	1230
Type 1231 throttle plug insertion (½ NPT) for 1009 Duralife® (body only)	1231
Tool to open orifice on push-in throttle plug	101A206-01

(1) Formerly 1206T Tool Kit.
(2) Formerly some parts in 1205T Tool Kit.
(3) Both parts must be purchased together.
(4) Previous and current design.
(5) Previous design only.
(6) Current design only.

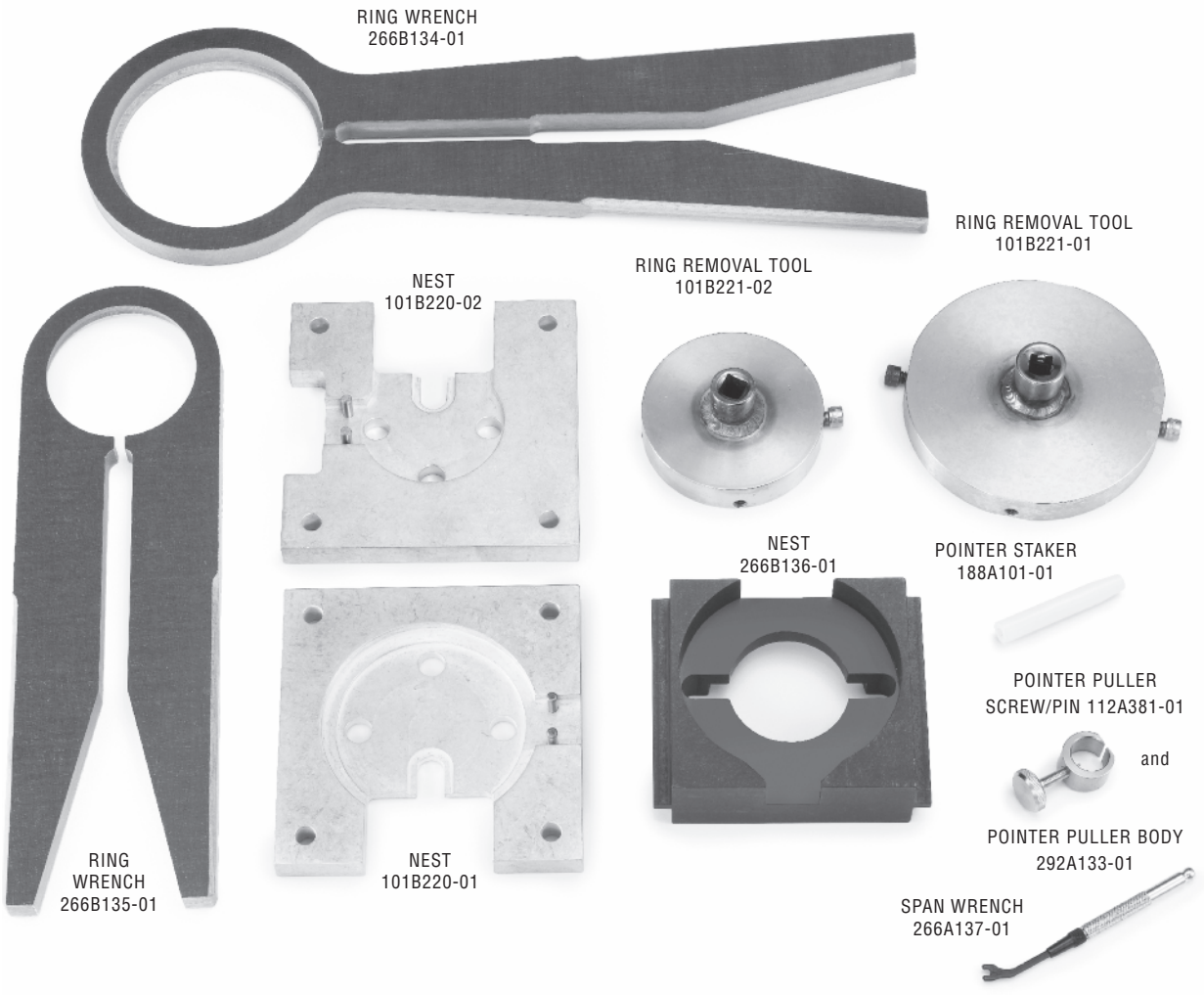

ASHCROFT® Type 1188 Bellows Gauge Calibration Procedure

CALIBRATION & TROUBLE CORRECTION DIAGRAM

- **RANGE SPAN ADJUSTMENT**
  - **RANGE TOO SHORT** — Adjust slide "S" inward
  - **RANGE TOO LONG** — Adjust slide "S" outward
- **POINTER JUMPING**
  - **STICKY PARTS** — Clean all bearings and gear teeth
  - **LOOSE HAIRSPRING** — Remove backlash by disengaging pinion & rotate to tighten
  - **COUNTER BALANCE RUBBING** — Bend if necessary to clear socket in travel
- **SLUGGISH MOVEMENT**
  - **TIGHT HAIRSPRING** — Loosen by disengaging pinion & rotate
- **NON LINEAR**
  - **NON LINEAR FIRST 3RD.** → **ADJ. ANGLE OF PULL BY INCREASING ANGLE "A"**
  - **NON LINEAR LAST 3RD.** → **ADJ. ANGLE OF PULL BY DECREASING ANGLE "A"**

NOTE: After adjusting range span, set both movement stops. Set the underload stop so that the pointer will stop at zero. Set the overload stop so that the pointer will pass the maximum range approximately 5˝.

After adjusting span re-zero pointer by removing from pinion and re-assembling at the proper dial mark.

NOTE: To increase or decrease angle "A," bend tip inward or outward as required. Doing this may run the movement segment off the pinion. This can be corrected by cutting off one end off the link "E" decreasing its length, or makin a new length from .032 dia. phos. bronze wire.
Caution: When reproducing link end, follow figure 44 very closely. this will prevent too much play, or, binding in operation.

REF: Replacing System Bellows

After assembling bellows to the gauge socket securely, subject system to 30 psi for five minutes, allowing bellows to travel approximately 1/8˝ against the overload stop. After this, heat treat system for 15 hours at 250°F, this procedure is necssary to prevent gauge drift.

SLIDE AND LINK (angle "A")
Enlarged view of slide and link

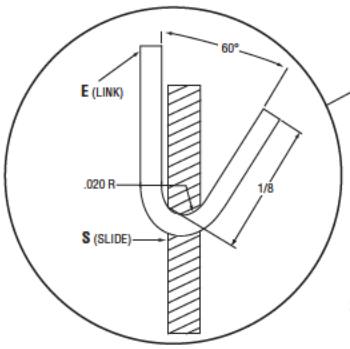

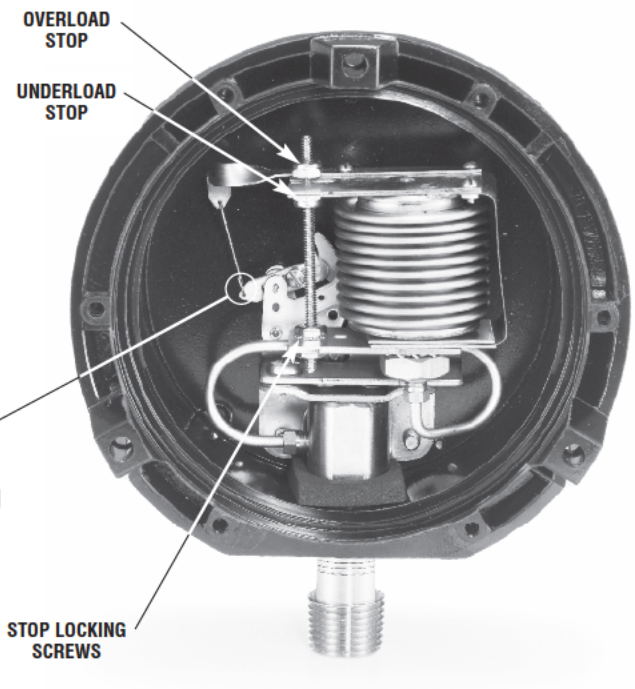

© Ashcroft Inc., 250 E. Main St., Stratford, CT 06614-5145, Tel: 203-378-8281, Fax: 203-385-0499, www.ashcroft.com
All sales subject to standard terms and conditions of sale. I&M008-10173-3/10 (1188)

ASHCROFT® Previous Type 1009 Duralife® Calibration Procedure – Vacuum Range

1. Remove ring, window and gasket pointer.
2. Using a pencil, refer to dial and mark the 0 and 25˝ Hg positions on the case flange.
3. Remove dial.
4. Apply 25˝ Hg vac.
5. Lightly press pointer onto pinion carefully aligning it with the 25˝ Hg vac. mark on the flange.
6. Release vacuum fully.
7. Note agreement of pointer to zero mark on flange.
8. If span is high or low, turn span block as shown in Figure 1.

Figure 1 –

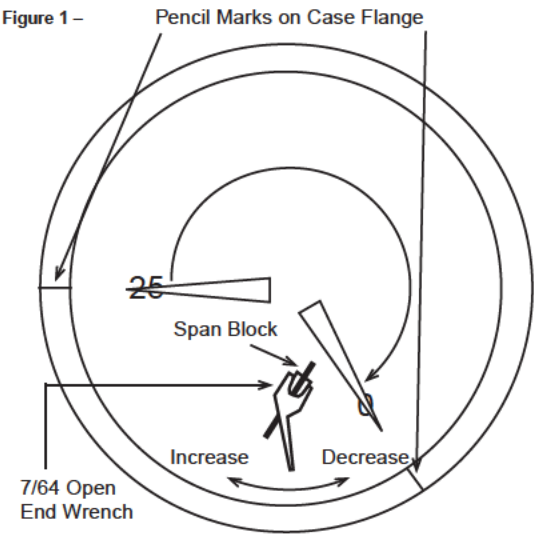

9. Repeat steps 4 through 8 until span is correct.
10. Remove pointer.
11. With 25˝ Hg vac applied, reassemble dial, dial screws (finger tight) and point.
12. Apply 15˝ Hg vac. and note accuracy of indication. If required, slide dial left or right to reduce error to 1% maximum.
13. Firmly tighten dial screws.
14. Firmly tap pointer onto pinion.
15. recheck accuracy at 15 and 25˝ Hg vac. (Figure 2).
16. Reassemble window, gasket and ring.

Figure 2 –

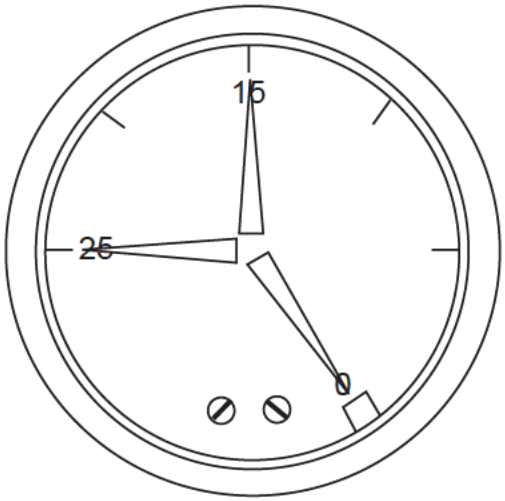

Notes: See page 10 for any tools required to calibrate.

For models produced prior to September 2008 for 2½˝ version and December 2008 for 3½˝ version.
Back of gauge will have a date code sticker.

© 2010 Ashcroft Inc., 250 East Main Street, Stratford, CT 06614-5145, USA, Tel: 203-378-8281, Fax: 203-385-0499, www.ashcroft.com
All sales subject to standard terms and conditions of sale. I&M008-10077 9/01 AMR 05/10

ASHCROFT® Previous Type 1009 Duralife® Calibration Procedure – Pressure Range

Step 1. With the dial off, install pointer at 9 o'clock "lightly," Figure 3.

Figure 3 –

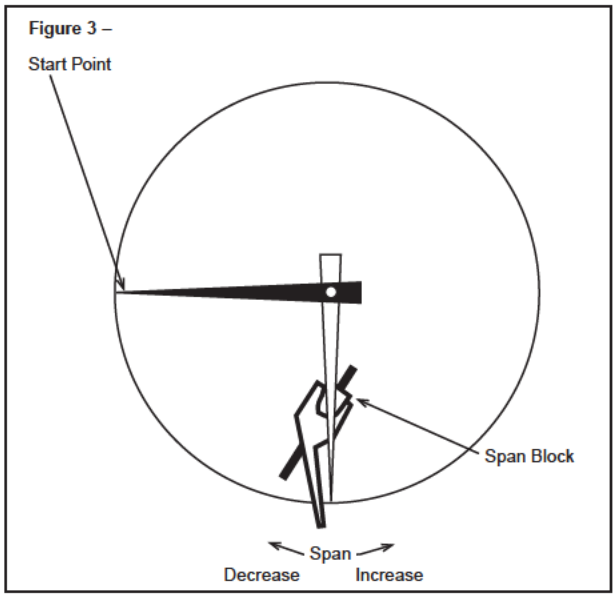

Step 2. Go to full scale pressure…rotate span block with tool until pointer rests at 6 o'clock.

Step 3. Go to zero pressure (9 o'clock)…if pointer has not moved away from start point, go to Step 4. If pointer has moved, repeat Step 1 until span is correct.

Step 4. Install dial with screws snug.

Figure 4 –

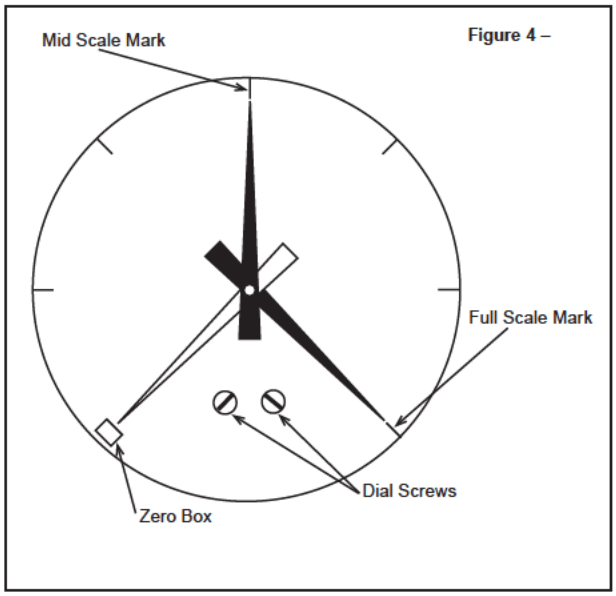

Step 5. Install pointer centered in zero box, Figure 4.

Step 6. Go to full scale pressure…check that pointer is within 1% of full scale mark. If not, remove pointer and dial and return to step 1, Figure 4.

Step 7. Go to mid-scale pressure…rotate dial until mid-scale mark is aligned with pointer, Figure 4.

Step 8. Tighten dials screws and stake on pointer.

Step 9. Check zero and full scale. Reassemble window, gasket and ring.

Notes: See page 10 for any tools required to calibrate.

For models produced prior to September 2008 for 2½˝ version and December 2008 for 3½˝ version.
Back of gauge will have a date code sticker.

© 2010 Ashcroft Inc., 250 East Main Street, Stratford, CT 06614-5145, USA, Tel: 203-378-8281, Fax: 203-385-0499, www.ashcroft.com
All sales subject to standard terms and conditions of sale. I&M008-10077 9/01 AMR 05/10

ASHCROFT® Current Type 1009 Duralife® Calibration Procedure – Pressure and Vacuum Range

Calibration – 1009 Duralife® Gauge –
Inspect gauge for accuracy. At times gauges are simply "off zero" and opening the ventable plug at the top of the gauge will relieve internal gauge pressure and correct the offset. If this is not adequate and inspection shows that the gauge warrants recalibration to correct zero, span and/or linearity errors, proceed as follows:

Remove ring, window, and gasket using Ashcroft Ring Removal Tools P/N 101B220-02 and 101B221-02 for 2½" gauges and 101B220-01 and 101B221-01 for 3½" gauges.

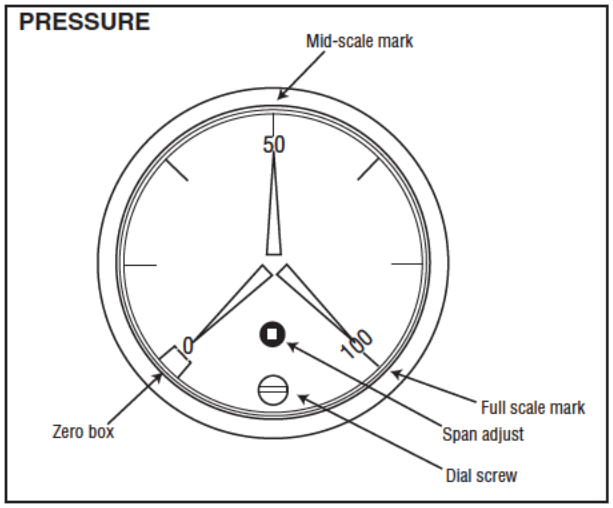

Positive Pressure Ranges –

1. Adjust pointer with a slotted screwdriver until it is in the center of the zero box. This is often all that is required it correct calibration issues.
2. Apply full scale pressure. If error exceeds 1% rotate the black span adjustment device with a #0 square drive bit. Clockwise increases span, counterclockwise decrease span.
3. Fully exhaust pressure and check that pointer still is still in the zero box. If not, repeat step 1 and 2
4. Once 0 and full scale are within tolerance, pressurize gauge to mid-scale.
5. If gauge is within 1%, calibration is complete. If not loosen the dial screw and rotate dial left or right to adjust midpoint. Retighten dial screw.
6. If an adjustment was made in step 5, recheck the gauge at zero and full scale, adjust accordingly until zero, mid and full scale points are in tolerance.

Vacuum Range –

1. Adjust pointer with a slotted screwdriver until it is in the center of the zero box. This is often all that is required it correct calibration issues.
2. Apply 25 inches Hg vacuum. If the error exceeds 1% adjust pointer with a slotted screwdriver until gauge is within tolerance.

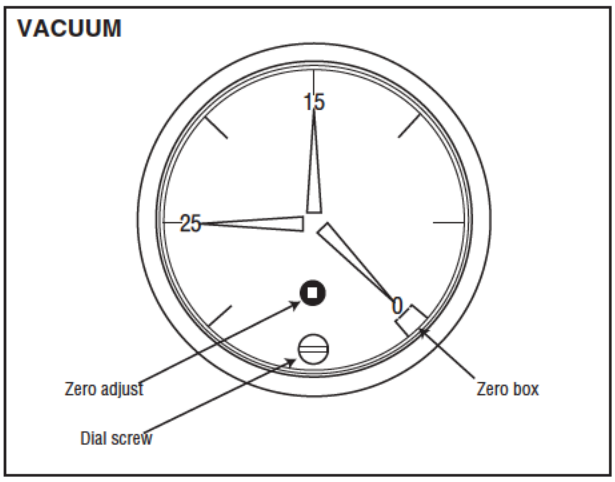

3. Vent to 0 pressure and check pointer position in the zero box. If error exceeds 1% rotate the black span adjustment device with a #0 square drive bit. Clockwise rotation moves pointer clockwise, counterclockwise rotation moves the pointer counterclockwise.
4. Repeat step 1 and 2 until 0 and 25 inches of Hg are within gauge tolerance.
5. Apply 15 inches Hg vacuum. If gauge is within 1%, calibration is complete. If not loosen the dial screw and rotate dial left or right to adjust midpoint. Retighten dial screw.
6. If an adjustment was made in step 4, recheck the gauge at zero and 25 inches of Hg vacuum, adjust accordingly until zero, 15 and 25 inches Hg are in tolerance.
7. Continue below.

   Re-assemble window and ring to gauge:

a. If plastic window is used, push window back into front of gauge, ensure the o-ring does not roll out of window groove (lubricate if necessary). Align the tabs of the window with the tabs of the case front. Once window is in place, install ring and tighten with tools referenced above and shown on page 10.

b If safety glass is used, reinstall window, gasket, and ring. Ensure that the gasket is seated properly under all four tabs of the ring and does not wrinkle when ring is tightened.

Note: Tighten ring: Apply 120-200inlb of torque. Rotate ring clockwise to tighten. Warning: over tightening of safety glass may induce cracking.

Notes: See page 10 for any tools required to calibrate.

For models produced after September 2008 for 2½˝ version and December 2008 for 3½˝ version.
Back of gauge will have a date code sticker.

© 2010 Ashcroft Inc., 250 East Main Street, Stratford, CT 06614-5145, USA, Tel: 203-378-8281, Fax: 203-385-0499, www.ashcroft.com
All sales subject to standard terms and conditions of sale. I&M008-10081-05/10 AMR 05/10

TYPE 1279 & 1379 SOLID FRONT DURAGAUGE® PRESSURE GAUGE CONVERSION INSTRUCTIONS TO:

- **Convert A Standard Dry Gauge To A Liquid Filled Gauge**
- **Convert A Standard Dry Gauge To A Dry, Weatherproof IP66 Gauge**

ASHCROFT®

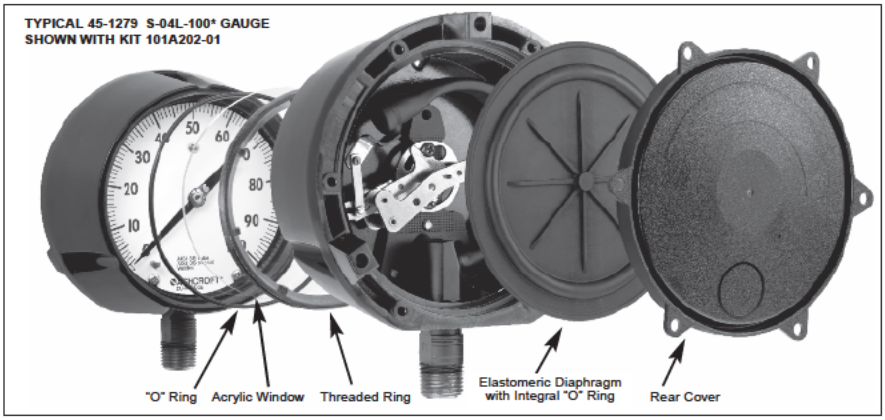

	1279		1379		
	4½˝ LOWER	4½˝ BACK	4½˝ LOWER	4½˝ BACK	6˝ LOWER & BACK
KIT PART NO.	101A202-01	101A203-01	1280	1283	1284
	QUANTITY INCLUDED				
ACRYLIC WINDOW	1	1	1	1	1
FRONT O-RING	1	1	1	1	1
DIAPHRAGM(1)	1	1	1	1	2(1-LC:1-BC)
REAR COVER	1	1	1	1	2(1-LC:1-BC)
COVER SCREWS	4	4	-	-	-
THROTTLE SCREWS	2	2	2	2	2
GARTER SPRING	–	1	1	1	1
FILL IDENTIFICATION	1	1	1	1	1
THREADED RING	–	–	1	1	1
TOP FILL PLUG	–	–	1	1	–

1. When Halocarbon fill is a requirement, rear case diaphragm bladder material is Viton instead of the standard Buna diaphragm bladder. Consult factory for part number.

TEMPERATURE LIMITS[1]				60 psi and Under Down Scale Zero Shift Required
	Ambient	Process	Storage	
Dry (IP66)	–20/200°F (–29/93°C)	–20/250°F(1) (–29/121°C)	–40/250°F (–40/121°C)	NONE
LF (glycerin)	20/150°F (7/66°C)	20/200°F (7/93°C)	0/150°F (–18/66°C)	NONE
(silicone)	–40/150°F (–40/66°C)	–40/200°F (–40/93°C)	–40/150°F (–40/66°C)	.12 psi
(halocarbon)	–40/150°F (–40/66°C)	–40/200°F (–40/93°C)	–40/150°F (–40/66°C)	.12 psi

Note: Other than discoloration of the dial and hardening of the gasketing that may occur as ambient or process temperatures exceeds 150°F, non-liquid-filled gauges with standard glass windows, can withstand continuous operating temperatures up to 250°F (121°C). Liquid-filled gauges can withstand 200°F (93°C) but glycerin fill and acrylic window will tend to yellow. Accuracy at temperatures above or below the reference ambient temperature of 68°F will be affected by approximately .4% per 25°F. Gauges with welded joints will withstand 750°F (450°F (232°C) with silver brazed joints) for short times without rupture, although other parts of the gauge will be destroyed and calibration will be lost. For continuous use and for process or ambient temperatures above 250°F (121°C), a diaphragm seal or capillary or siphon is recommended.
(1) Available for temperature below –20°F, see Production Information page ASH-PI-21B for details

1. Unscrew front threaded ring (turn CCW). Remove and discard glass window. For range spans 60 psi and under, shift pointer down scale by the amount shown in the table. With either the glass or plastic window, replace the O-ring with one furnished in the kit.
2. Remove protective paper from acrylic plastic window taking care not to scratch window. Assemble window in gauge.
3. Moisten face of threaded ring with silicone oil or silicone grease where ring bears up against window. Replace front threaded ring and tighten firmly hand tight. See instructions on reverse side for applying proper torque to ring to establish desired squeeze on O-ring seal. **(Fig. 4).**

It is important to hold gauge **rigidly**, otherwise ring lugs may be damaged during removal or assembly process.

4. From rear of gauge, remove and discard these parts: rear cover and cover gaskets from case.
   Note: Disregard Step Nos. 5a and 5b if converting to hermetically sealed version.
   When converting a 45-1379 with the top fill hole configuration, p/n 256A176-01 fill plug is required and must be ordered separately.
5. **Filling Procedures:**
   a. **Manual Filling Procedure:** Place gauge face down on bench and **tip gauge** by blocking up front with a ⅜ inch block at the 12 o'clock dial position. Tipping of the gauge is necessary so fluid will flow into front cavity of the case. Pour in fill liquid to within about 1/16 inch of rear seal lip. When bubbles stop rising, front cavity is filled. Remove ⅜ inch block and pour in liquid until level is about 1/16 inch below rear sealing lip.
   Note: An alternative method of filling is to fill the front dial cavity, adding the front window, etc., as in Step No. 3. Then fill the rear of the gauge. This method eliminates the need to tip the gauge.
   b. **Vacuum Pump Fill Procedure:** (This procedure is recommended when filling a large number of gauges.) Place gauge face down and insert a ⅛ inch diameter tube, connected to a vacuum pump, through the 12 o'clock position hole in the rear, solid front portion of the case **(see Fig. 5).** Evacuate the air from the front dial cavity while pouring in the fill fluid through the case back. The vacuum will displace the air with fluid. When the dial cavity is solidly filled, remove the tubing and continue to pour the fill fluid to within 1/16 inch BELOW the O-ring channel lip.
   Pre-measuring fill amount is not necessary with above methods. For reference, amount of fill is approximately 400 ml. or 14 fluid oz. (4½˝ GA.) and 455 ml. or 16 fluid oz. (6˝ GA.).
   c. **Note:** The liquid fill level should be ⅜˝ (±⅛) as measured from the inside of the ring at the 12:00 o'clock position.
6. On lower connection gauges, assemble rear seal diaphragm to case.
   For back connection gauges see instructions on reverse side. **(Fig. 2/4).**
7. **For 1279:**
   Assemble rear cover and six self tapping screws in a criss-cross pattern and torque to 12 in lbs. (±2 in lbs.)
   For 1379:
   - Thread rear ring and torque to 200 in lbs
   - Install stainless steel back cover using two screws. Torque screws to 14 in lbs. (±2 in lbs.)
8. Assemble throttle screw to threaded hole in socket.
   Note: If system is monel (socket wrench flat stamped "PHS" or "PH") use monel throttle screw.
9. Check appropriate box on fill identification label, and peel off label back, and attach fill label to gauge case.
10. If gauge is to be repackaged:
    a. Include enclosed instruction sheet inside carton.
    b. Change type number on carton label to:
    (1) Hermetically Sealed – 1279(*)SH.
    (2) Liquid Filled – 1279(*)SL.
    *Bourdon Tube System Code

Glycerin or silicone should not be used in applications involving Oxygen, Chlorine, Nitric Acid, Hydrogen Peroxide or other strong oxidizing agents, because of danger of spontaneous chemical reaction, ignition or explosion. Halocarbon should be specified. Products with this fill can be ordered from factory.

The use of fluids other than those listed in the table above (for example, Hydrocarbon-based oils) may result in leakage caused by a reaction between the fluid and the elastomeric seals. Consult the factory before filling with any other fluid.

© 2015 Ashcroft Inc., 250 East Main Street, Stratford, CT 06614 USA, Tel: 203-378-8281, Fax 203-385-0402 www.ashcroft.com
All sales subject to standard terms and conditions of sale. All rights reserved. I&M008-10090 (84B276) Rev 10/15

TYPE 1279 & 1379 SOLID FRONT DURAGAUGE® PRESSURE GAUGE CONVERSION INSTRUCTIONS TO:

- **Convert A Standard Dry Gauge To A Liquid Filled Gauge**
- **Convert A Standard Dry Gauge To A Dry, Weatherproof IP66 Gauge**

ASHCROFT®

INSTRUCTIONS FOR USING CONE TOOL AND RING WRENCH

Garter Spring & Diaphragm Assembly (Back Connection Gauge Only)

A. Place cone tool over socket shank as shown.

B. Moisten lip of socket and outer O-ring surface with silicone oil or grease.

C. Place diaphragm with rib side facing upward over cone into case grove.
Diaphragm O-ring must be completely in socket-shank grove.

D. Place garter spring over cone as shown and slide onto diaphragm in socket grove

E. Assemble rear cover with screws per step 7.

Front Ring Assembly (All Gauges)

A. Assemble ring to case by hand to start.

B. Place ring on wrench as shown

C. Use ½˝ drive extension and torque ring to 200 in. lb

Alternate Method

A. Tighten ring snugly by hand

B. Mark case and ring.

C. Turn ring another 100 to 120 degrees (slightly less than ½ turn) using the ring wrench and ½˝ drive socket wrench or place the blunt end of a wooden or plastic dowel against a ring lug and tap with a hammer.

BACK CONNECTION ASSEMBLED GAUGE

Fig. 2

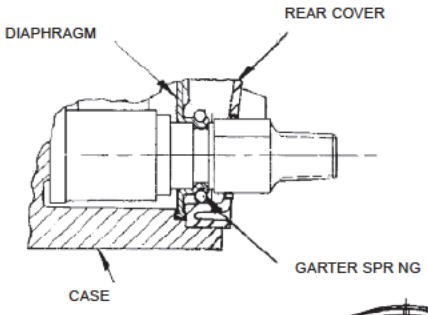

Fig. 3

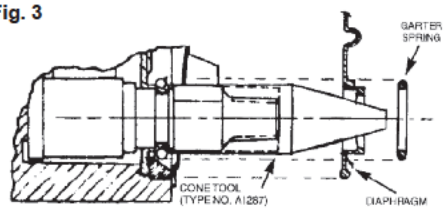

Fig. 4

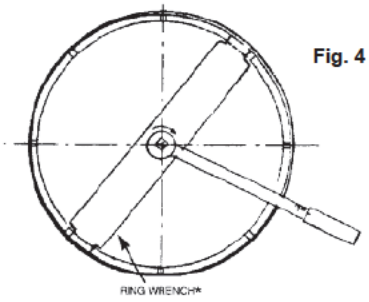

INSTRUCTIONS FOR LIQUID FILLING ASHCROFT® TYPE 1279 AND 1379 SOLID FRONT DURAGAUGE® PRESSURE GAUGES USING A VACUUM PUMP

A. Insert a length of ⅛ ˝ diameter tubing through the 12 o'clock position hole in the rear, solid front portion of the case, as shown.

B. Evacuate the air from the front dial cavity while pouring in the fill fluid through the case back. The vacuum will displace the air with fluid.*

C. When the dial cavity is solidly filled, remove the tubing and continue to pour the fill fluid to within 1/16 ˝ below the o-ring channel lip, as shown.

D. When converting a 45-1379 with the top fill hole configuration, p/n 256A176-01 fill plug is required and must be ordered separately.

*To prevent breakage, reduce vacuum to 15 in. Hg for plain glass and safety glass.

Fig. 5

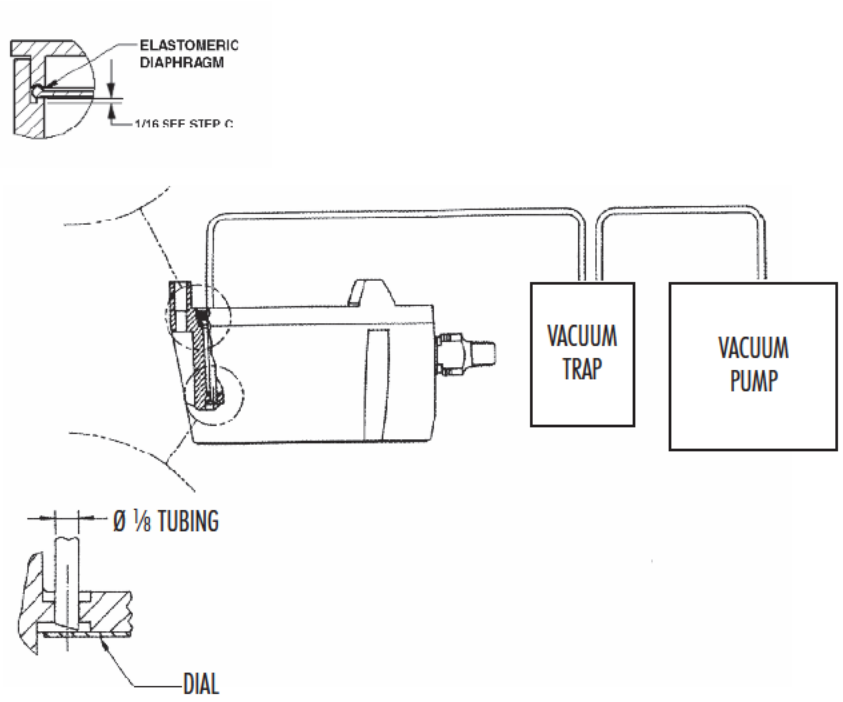

© 2015 Ashcroft Inc., 250 East Main Street, Stratford, CT 06614 USA, Tel: 203-378-8281, Fax 203-385-0402 www.ashcroft.com
All sales subject to standard terms and conditions of sale. All rights reserved. I&M008-10090 (84B276) Rev 10/15

INSTRUCTIONS FOR USE OF EXTERNAL EASY ZERO™ ADJUST FEATURE*

Fig. 1

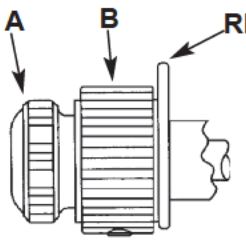

1. LOOSEN RING-LOCKING SCREW **A**.
2. OBTAIN REQUIRED ADJUSTMENT BY ROTATING KNOB **B** CLOCKWISE OR COUNTER-CLOCKWISE.
3. TIGHTEN SCREW **A** DOWN ON KNOB **B**.

*Applicable only for test gauge with hinged ring design.

ADDITIONAL CALIBRATION INSTRUCTIONS

1) "Standards shall have nominal errors no greater than ¼ of these permitted for the gauge being tested." *(Ref: ASME B40=100-1998)*
2) The instrument used as the calibration standard should have a maximum range no greater than 2x that of the gauge being tested. (i.e. Do not use a 400psi standard to test a 15psi gauge.)
3) "Known pressure shall be applied at each test point on increasing pressure (or vacuum) from one end to the other end of the scale. At each test point the gauge shall be . . .
lightly tapped, and then read . . ."
(*Ref: ASME B40.1 ¶ 6.2.4.1*)
4) To read gauge indication, move eye over red pointer tip at OD of printed dial until red reflection in mirror band is no longer visible, and then read the pointer position in reference to the dial.

© Ashcroft Inc., 250 E. Main St., Stratford, CT 06614-5145, Tel: 203-378-8281, Fax: 203-385-0499, www.ashcroft.com
All sales subject to standard terms and conditions of sale. I&M008-10082 11/01 RevB (250-2917-4) AMR 10/07

Fig. 2

THIS TEST GAUGE IS PROVIDED WITH A MICROSPAN™ ADJUSTMENT TO SIMPLIFY CALIBRATION. THE FLOW CHART BELOW OUTLINES THE RECOMMENDED CALIBRATION PROCEDURE

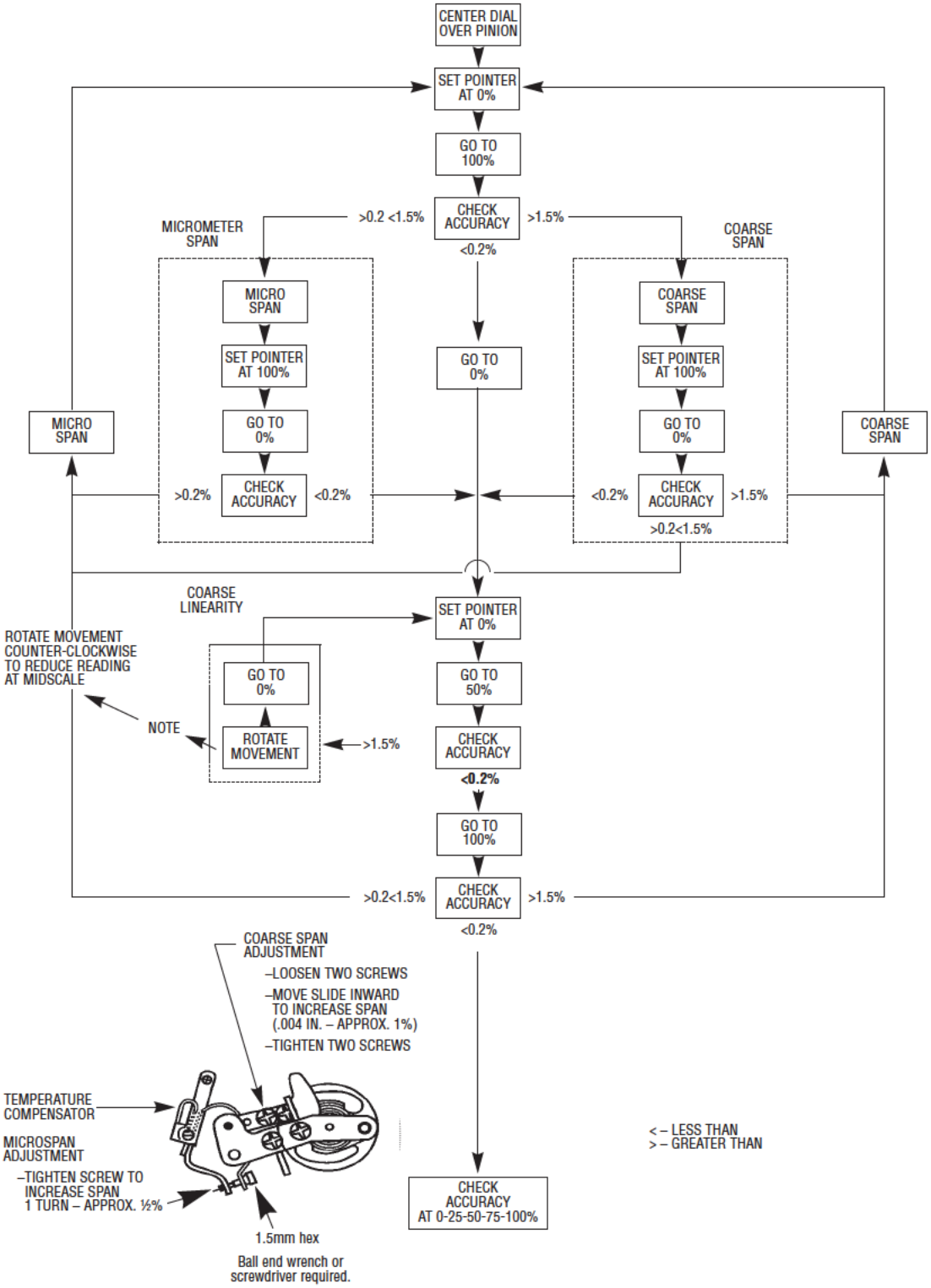

© Ashcroft Inc., 250 E. Main St., Stratford, CT 06614-5145, Tel: 203-378-8281, Fax: 203-385-0499, www.ashcroft.com
All sales subject to standard terms and conditions of sale. I&M008-10082 11/01 Rev C (250-2917-4) 12/15

Steam Valves

70-140-64 SERIES



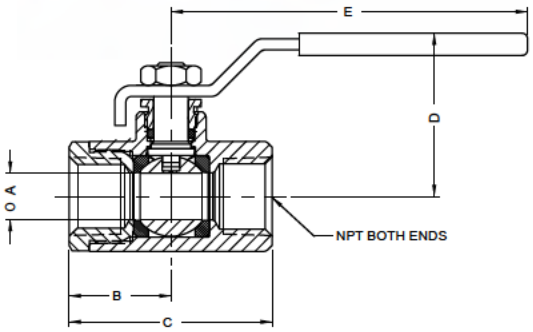

250 LB. BRONZE STEAM BALL VALVE

Designed for reliable operation on high pressure steam systems and with fluids of widely varying temperatures. Stainless steel slot vented ball and stem standard.

FEATURES

- Heavy cast bronze body
- ASTM B584 bronze body
- Slot vented stainless steel ball
- Special high-temperature MTFE seats and stem packing
- 250 SWP rating
- Red handle graphics for identification
- American-made bronze casting

Model Number	Size (in.)	Dimensions (in.)				
		A	B	C	D	E
70-141-64	1/4	0.37	1.03	2.06	1.75	3.87
70-142-64	3/8	0.37	1.03	2.06	1.75	3.87
70-143-64	1/2	0.50	1.12	2.25	1.75	3.87
70-144-64	3/4	0.68	1.50	3.00	2.12	4.87
70-145-64	1	0.87	1.68	3.37	2.25	4.87
70-146-64	1-1/4	1.00	2.00	4.00	2.62	5.50
70-147-64	1-1/2	1.25	2.18	4.37	3.06	8.00
70-148-64	2	1.50	2.34	4.68	3.25	8.00
70-140-64	3	2.50	3.37	6.75	4.12	8.00

(Also available in 71 & 77 Series)

Bronze Ball Valves for Steam Boiler Service

70B-140 SERIES



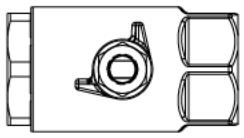

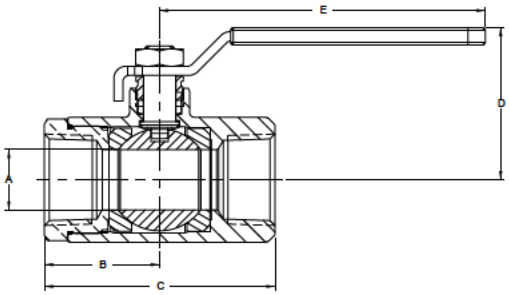

B31.1 POWER PIPING BRONZE BALL VALVE

The Apollo® 70B series offers the same rugged features as the standard 70 series valves but with materials of construction that meet the latest requirements of the ASME B31.1 Power Piping Code for steam service. This valve provides proven performance and Code compliance for B31.1 Power Piping applications.

FEATURES

- ASTM B62 Bronze body and retainer
- Stainless Steel ball & stem
- Body is marked "250 SWP" and "B62"
- Pressure balanced slot-vented ball
- Blow-out proof stem design
- Premium MPTFE seats and stem packing
- 100% factory tested
- Made in USA

Model Number	Size (in.)	Dimensions (in.)					Wt. (lb.)
		A	B	C	D	E	
70B-141-64	1/4"	0.37	1.03	2.06	1.75	3.87	0.60
70B-142-64	3/8"	0.37	1.03	2.06	1.75	3.87	0.56
70B-143-64	1/2"	0.50	1.12	2.25	1.75	3.87	0.63
70B-144-64	3/4"	0.68	1.50	3.00	2.12	4.87	1.39
70B-145-64	1"	0.87	1.68	3.37	2.25	4.87	1.72
70B-146-64	1-1/4"	1.00	2.00	4.00	2.62	5.50	3.26
70B-147-64	1-1/2"	1.25	2.18	4.37	3.06	8.00	4.61
70B-148-64	2"	1.50	2.34	4.68	3.25	8.00	6.06

KUNKLE SERIES 6000 SAFETY VALVES

SAFETY AND RELIEF PRODUCTS

Bronze safety valves to ASME section I and VIII, steam, 'V' and 'UV'; section VIII, air/gas, 'UV' National Board certified including models to ASME section IV, steam 'HV'. PED certified for non-hazardous gas



MODEL 6010

FEATURES

- O-ring seats available for exceptional leak-free performance, reduced maintenance cost, multiple cycles with tight shutoff and improved seating integrity.
- Heavy duty casting.
- Wide hex on valve nozzle provides clearance for easy installation.
- Seats lapped to optical flatness.
- Dual control rings offer easy adjustability for precise opening with minimum pre-open or simmer and exact blowdown control.
- Pivot between disc and spring corrects misalignment and compensates for spring side thrust.
- Grooved piston type disc reduces sliding area and friction.
- Heavy duty lift lever assembly.
- Each valve tested and inspected for pressure setting and leakage.

GENERAL APPLICATION

These valves are suitable for use on steam boilers and generators, reciprocating or rotary, portable or stationary air/gas compressors, intercoolers and aftercoolers. Also for pressure vessels containing steam, air or non-hazardous gas and on pressure reducing stations.

TECHNICAL DATA

Connections:	Threaded NPT
Temperature range[1]:	-60° to 425°F (-51° to 219°C)
Pressure range[1]:	3 to 300 psig (0.2 to 20.7 barg)
Code:	ASME I, IV, VIII and PED

V HV UV

NOTE

1. See page 2 for more temperature and pressure range information.

© 2017 Emerson. All rights reserved.

MODELS OVERVIEW

Model 6010: Side outlet. Full nozzle design with bronze/brass trim. Available with O-ring seats.
Model 6021: As model 6010 with Teflon® (PFA) disc insert (use on steam only).
Model 6030: As model 6010 except stainless steel (SS) trim (nozzle and disc). Available with O-ring seats.
Model 6182: Top outlet. Full nozzle design with bronze/brass trim. O-ring seat available.
Model 6121: As model 6182 with Teflon® (PFA) disc insert (use on steam only).
Model 6130: As model 6182 except SS trim (nozzle and disc). Available with O-ring seats.
Model 6186: Top outlet. Full nozzle design with bronze/brass trim. 150 psig (10.3 barg) maximum set pressure. Replaces Model 86 (original equipment only). For air service only.
Model 6283: Over-sized side outlet. Full nozzle design bronze/brass trim.
Model 6221: As model 6283 with Teflon® (PFA) disc insert (use on steam only).
Model 6230: As model 6283 except SS trim (nozzle and disc).
Model 6933: As model 6010 except certified for ASME code Section IV. Low pressure steam heating boilers set at 15 psig (1.0 barg) only.
Model 6934: As model 6021 except certified for ASME code Section IV. Low pressure steam heating boilers set at 15 psig (1.0 barg) only.
Model 6935: As model 6030 except certified for ASME code Section IV. Low pressure steam heating boilers set at 15 psig (1.0 barg) only.

NOTE

1. Resilient seats determine temperature range (see Specifications section).
2. Viton® and Teflon® are registered trademarks of E.I. du Pont de Nemours and Company.

PRESSURE AND TEMPERATURE LIMITS[1]

Models 6010, 6021, 6182, 6121, 6283, 6221

Steam service: 3 to 250 psig (0.2 to 17.2 barg) -60° to 406°F (-51° to 208°C)
Air/gas service: 3 to 300 psig (0.2 to 20.7 barg) -60° to 406°F (-51° to 208°C)

Models 6030, 6130, 6230

Steam and air/gas service: 3 to 300 psig (0.2 to 20.7 barg) -60° to 425°F (-51° to 218°C)

SPECIFICATIONS

SERVICE RECOMMENDATIONS FOR SERIES 6000 RESILIENT SEAT/SEAL MATERIALS

Seat/seal materials	Service recommendation
Viton® A (FKM) (-15 to 406°F [-26 to 208°C])	Air and gas
Ethylene propylene (-70 to 425°F)[-57 to 218°C]	Steam
Teflon® (PFA)	Steam

Parts and materials

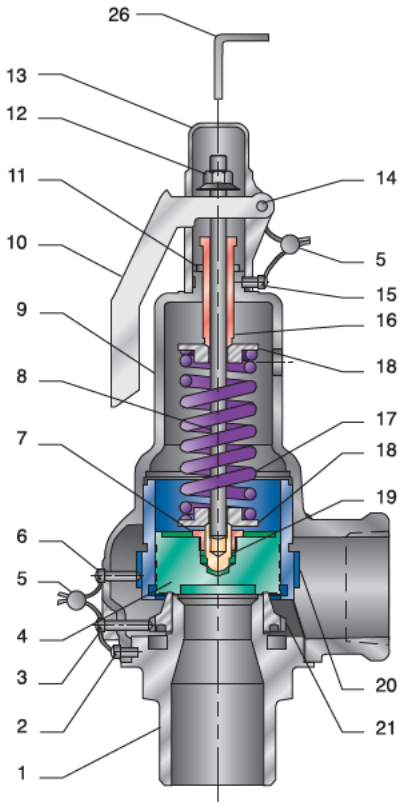

MODELS 6010, 6030, 6283, 6230, 6933, 6935

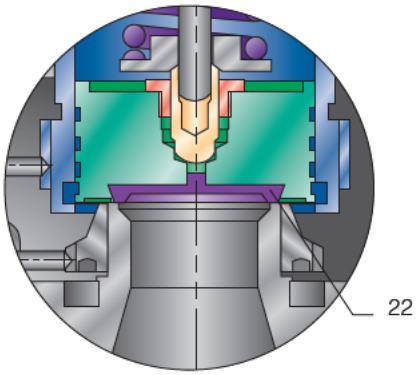

MODELS 6021, 6121, 6221, 6934
Teflon® (PFA) seat configuration

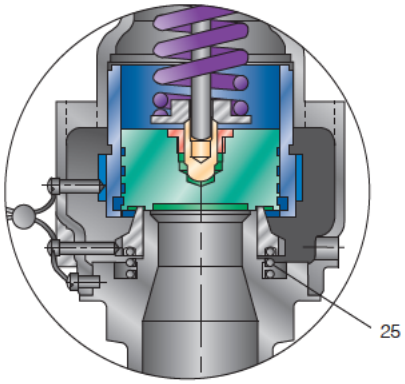

MODELS 6182, 6121, 6130, 6186
Top outlet configuration

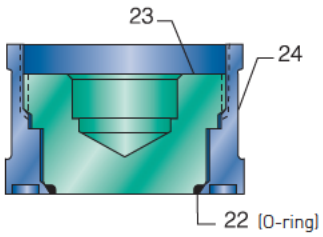

MODELS 6010, 6030, 6182, 6130, 6186, 6283, 6230
Optional soft seat

PARTS AND MATERIALS

No.	Part name	Materials
1	Nozzle	BRS B283-C48500 or BRZ SB62[3]
2	Body set screw	SS 18-8
3	Warn ring set screw	SS 18-8
4	Disc	BRS B21 C48500[4]
5	Wire and seal	SS wire and lead seal
6	Guide set screw	SS 18-8
7	Retainer nut[2]	BRS B16
8	Stem	SS A582-303 for D orifice SS A582-416 for E thru J orifice
9	Body	BRZ B584-C84400
10	Lever	STL A109 or JIS SPCC equivalent/ZN plated yellow
11	Jam nut	BRS B16
12	Lift nut	STL A108-1018/ZN plated
13	Cap	Aluminum, anodized
14	Lever pin	STL A108-12L14
15	Cap set screw	SS 18-8
16	Compression screw	BRS B16
17	Spring	ASTM A-313 TY 631
18	Spring step	BRS B16
19	Stem retainer	BRS B16
20	Guide	BRS B16 for D and E orifice BRS B283-C37700 for F through J orifice
21	Warn ring[7]	BRS B16
22	Seat	Note 1
23	Seat retainer	BRS B16[5]
24	Disc[8]	BRS B21 C48500[5]
25	Warn ring spring[6]	SS A313-302/316
26	Gag screw[9]	STL A108-1018/ZN plated

NOTES

1. Models 6021, 6121, 6221 and 6934 Teflon® (PFA), optional O-ring seat available for all others (except Models 6933 and 6935 - metal seat only).
2. Section IV only.
3. Models 6030, 6130, 6230 and 6935 are SS SA351-CF8.
4. Models 6030, 6130, 6230 and 6935 are SS SA479-304 (D through H orifice) or SS SA479-316 (J orifice).
5. Models 6030, 6130, 6230 and 6935 are SS SA479-304.
6. Variation 02 (vibration dampening) only.
7. Soft seat 'D', 'E' and 'F' orifice require special warn ring (notch on O.D. of fins).
8. Applies only to elastomer soft seat options.
9. Applies only to gag options. Remove when valve is in service. Failure to remove gag screw may cause serious damage to equipment, person injury and death.

SPECIFICATIONS

		Connections ANSI standard				Valve dimensions inch (mm)						Approximate weight	
		Inlet		Outlet									
Model number[1]	Orifice	inch	(mm)	inch	(mm)	A		B		C		lb	(kg)
60**DC#	D	½	(12.7)	¾	(19.0)	2⅛	(54)	1⅝	(41)	6½	(165)	1½	(0.7)
60**DD#[2]	D	¾	(19.0)	¾	(19.0)	2⅛	(54)	1⅝	(41)	6½	(165)	1¾	(0.8)
61**DC#	D	½	(12.7)	-	-	-	-	-	-	6½	(165)	1¼	(0.6)
60**ED#	E	¾	(19.0)	1	(25.4)	2⅜	(60)	1¾	(44)	7½	(191)	2½	(1.1)
60**EE#[2]	E	1	(25.4)	1	(25.4)	2½[4]	(64)	1¾	(44)	7⅝[5]	(194)	2¾	(1.2)
61**ED#	E	¾	(19.0)	-	-	-	-	-	-	7½	(191)	2¼	(1.0)
62**ED#	E	¾	(19.0)	1¼	(31.75)	2⅞	(73)	1¾	(44)	7½	(191)	2¾	(1.2)
60**FE#	F	1	(25.4)	1¼	(31.8)	2⅝	(67)	2	(51)	8½	(216)	3½	(1.6)
60**FF#[2]	F	1¼	(31.8)	1¼	(31.8)	2⅞	(73)	2	(51)	8¾	(222)	3¾	(1.7)
61**FE#	F	1	(25.4)	-	-	-	-	-	-	8½	(222)	3¼	(1.5)
62**FE#	F	1	(25.4)	1½	(38.0)	2⅞	(73)	2	(51)	8½	(222)	3¾	(1.7)
60**GF#	G	1¼	(31.8)	1½	(38.0)	3⅛	(79)	2⅜	(60)	9⅝	(244)	5½	(2.5)
60**GG#[2]	G	1½	(38.0)	1½	(38.0)	3⅜	(86)	2⅜	(60)	10	(254)	5¾	(2.6)
61**GF#	G	1¼	(31.8)	-	-	-	-	-	-	9⅝	(244)	5	(2.3)
62**GF#	G	1¼	(31.8)	2	(51.0)	3⅜	(86)	2¼	(57)	9⅝	(244)	5¾	(2.6)
60**HG#	H	1½	(38.0)	2	(51.0)	3⅝	(92)	2¾	(70)	10⅝	(270)	7¾	(3.5)
60**HH#[2]	H	2	(51.0)	2	(51.0)	4⅛	(105)	2¾	(70)	11⅛	(283)	8	(3.6)
61**HG#	H	1½	(38.0)	-	-	-	-	-	-	10⅝	(270)	7¼	(3.3)
62**HG#	H	1½	(38.0)	2½	(64.0)	3⅞	(98)	3	(76)	10⅝	(270)	8	(3.6)
60**JH#	J	2	(51.0)	2½	(64.0)	4¼	(108)	3⅜	(86)	13⅝	(346)	15½	(7.0)
60**JJ#[2]	J	2½	(64.0)	2½	(64.0)	4½	(114)	3⅜	(86)	14	(356)	15¾	(7.2)
61**JH#	J	2	(51.0)	-	-	-	-	-	-	13⅝	(346)	15	(6.8)
62**JH#	J	2	(51.0)	3	(76.0)	4⅝	(117)	3⅜	(86)	13⅝	(345)	15½	(7.0)

Dimensions are for reference only.

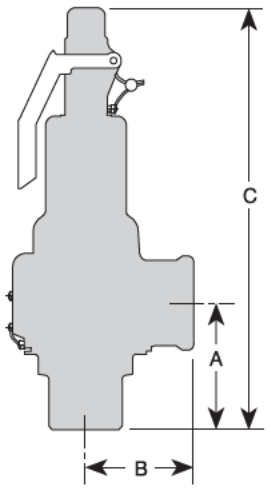

NOTES

1. Replace asterisks with desired model number. Replace # with desired seat material.
2. Model 6030 and 6935 available only ½ x ¾" (12.7 x 19 mm), ¾ x 1" (19 x 25.4 mm), 1 x 1¼" (25.4 x 31.8 mm), 1¼ x 1½" (31.8 x 38 mm), 1½ x 2" (38 x 51 mm) and 2 x 2 ½" (51 x 64 mm).
3. Models 6933, 6934 and 6935 have same dimensions as model 6010.
4. 2¼" for BSP (57).
5. 7⅜" for BSP (192.5).

Capacities

NON-CODE[1] AND ASME SECTION VIII AIR (SCFM) Flow Coefficient = 0.878

	Orifice area, in²					
Set pressure (psig)	D (0.121)	E (0.216)	F (0.336)	G (0.554)	H (0.863)	J (1.414)
3	28	50	77	127	198	325
4	32	57	89	146	228	374
6	39	70	108	178	278	456
8	45	80	124	205	319	523
10	50	89	138	228	355	582
15	64	114	177	292	454	744
20	73	131	204	336	524	858
25	83	148	231	381	593	972
30	93	166	258	425	663	1086
35	104	185	288	474	739	1211
40	114	204	317	523	815	1336
45	125	223	347	572	892	1461
50	136	242	377	621	968	1586
55	146	261	407	671	1045	1711
60	157	281	436	720	1121	1837
65	168	300	466	769	1197	1962
70	179	319	496	818	1274	2087
75	189	338	526	867	1350	2212
80	200	357	555	916	1426	2337
85	211	376	585	965	1503	2462
90	221	395	615	1014	1579	2588
95	232	414	645	1063	1656	2713
100	243	434	674	1112	1732	2838
105	254	453	704	1161	1808	2963
110	264	472	734	1210	1885	3088
115	275	491	764	1259	1961	3213
120	286	510	793	1308	2038	3339
125	296	529	823	1357	2114	3464
130	307	548	853	1406	2190	3589
135	318	567	883	1455	2267	3714
140	329	586	912	1504	2343	3839
145	339	606	942	1553	2420	3964
150	350	625	972	1602	2496	4090
160	371	663	1031	1700	2649	4340
170	393	701	1091	1798	2802	4590
180	414	739	1150	1897	2954	4841
190	436	778	1210	1995	3107	5091
200	457	816	1269	2093	3260	5341
210	478	854	1329	2191	3413	5592
220	500	892	1388	2289	3566	5842
230	521	931	1448	2387	3718	6092
240	543	969	1507	2485	3871	6343
250	564	1007	1567	2583	4024	6593
260	586	1045	1626	2681	4177	6843
270	607	1084	1686	2779	4329	7094
280	628	1122	1745	2877	4482	7344
290	650	1160	1805	2975	4635	7594
300	671	1198	1864	3074	4788	7845

NOTE

1. No code stamp or 'NB' on nameplate below 15 psig set.

Capacities - metric units

NON-CODE[1] AND ASME SECTION VIII AIR (Nm³/h) Flow Coefficient = 0.878

	Orifice area, cm²					
Set pressure (barg)	D (0.781)	E (1.394)	F (2.168)	G (3.574)	H (5.567)	J (9.123)
0.2	44	78	121	199	311	509
0.3	53	95	148	243	379	621
0.4	61	109	170	280	436	715
0.6	74	133	206	340	530	869
1.0	95	169	263	433	675	1106
1.5	123	219	340	561	874	1433
2.0	145	259	403	664	1035	1696
2.5	170	303	471	777	1210	1982
3.0	195	347	540	890	1386	2272
3.5	219	391	609	1004	1563	2562
4.0	244	436	678	1117	1740	2851
4.5	269	480	746	1231	1917	3141
5.0	294	524	815	1344	2094	3431
5.5	319	569	884	1458	2270	3721
6.0	343	613	953	1571	2447	4010
6.5	368	657	1022	1685	2624	4300
7.0	393	701	1091	1798	2801	4590
7.5	418	746	1160	1912	2978	4880
8.0	443	790	1228	2025	3154	5169
8.5	467	834	1297	2139	3331	5459
9.0	492	878	1366	2252	3508	5749
9.5	517	923	1435	2366	3685	6039
10.0	542	967	1504	2479	3862	6328
10.5	567	1011	1573	2593	4038	6618
11.0	591	1056	1642	2706	4215	6908
11.5	616	1100	1710	2820	4392	7197
12.0	641	1144	1779	2933	4569	7487
12.5	666	1188	1848	3047	4746	7777
13.0	691	1233	1917	3160	4922	8067
13.5	715	1277	1986	3274	5099	8356
14.0	740	1321	2055	3387	5276	8646
14.5	765	1365	2124	3501	5453	8936
15.0	790	1410	2192	3614	5630	9226
16.0	839	1498	2330	3841	5983	9805
17.0	889	1587	2468	4068	6337	10385
18.0	939	1675	2605	4295	6690	10964
19.0	988	1764	2743	4522	7044	11543
20.0	1038	1852	2881	4749	7398	12123

NOTE

1. No code stamp or 'NB' on nameplate below 1.0 barg set.

Capacities

NON-CODE[1] AND ASME SECTION VIII STEAM (lb/h) Flow Coefficient = 0.878

	Orifice area, in²					
Set pressure (psig)	D (0.121)	E (0.216)	F (0.336)	G (0.554)	H (0.863)	J (1.414)
3	87	155	242	398	621	1017
4	100	178	277	457	711	1166
6	121	215	335	552	860	1409
8	137	245	382	629	980	1606
10	152	271	422	695	1083	1775
15	179	319	497	819	1276	2091
20	206	368	573	944	1471	2410
25	234	417	649	1070	1666	2730
30	261	466	725	1195	1861	3050
35	291	520	808	1333	2076	3401
40	321	573	892	1470	2291	3753
45	351	627	975	1608	2505	4105
50	381	681	1059	1746	2720	4456
55	411	734	1143	1884	2934	4808
60	442	788	1226	2022	3149	5160
65	472	842	1310	2159	3364	5511
70	502	896	1393	2297	3578	5863
75	532	949	1477	2435	3793	6215
80	562	1003	1560	2573	4008	6566
85	592	1057	1644	2710	4222	6918
90	622	1110	1727	2848	4437	7270
95	652	1164	1811	2986	4651	7621
100	682	1218	1895	3124	4866	7973
105	712	1272	1978	3262	5081	8325
110	742	1325	2062	3399	5295	8676
115	773	1379	2145	3537	5510	9028
120	803	1433	2229	3675	5725	9380
125	833	1487	2312	3813	5939	9731
130	863	1540	2396	3950	6154	10083
135	893	1594	2479	4088	6368	10434
140	923	1648	2563	4226	6583	10786
145	953	1701	2647	4364	6798	11138
150	983	1755	2730	4502	7012	11489
160	1043	1863	2897	4777	7442	12193
170	1104	1970	3064	5053	7871	12896
180	1164	2077	3232	5328	8300	13599
190	1224	2185	3399	5604	8729	14303
200	1284	2292	3566	5879	9159	15006
210	1344	2400	3733	6155	9588	15709
220	1404	2507	3900	6430	10017	16413
230	1465	2615	4067	6706	10446	17116
240	1525	2722	4234	6981	10876	17819
250	1585	2829	4401	7257	11305	18523
260	1645	2937	4569	7533	11734	19226
270	1705	3044	4736	7808	12163	19929
280	1766	3152	4903	8084	12592	20632
290	1826	3259	5070	8359	13022	21336
300	1886	3367	5237	8635	13451	22039

NOTE

1. No code stamp or 'NB' on nameplate below 15 psig set.

Capacities - metric units

NON-CODE[1] AND ASME SECTION VIII STEAM (kg/h) Flow Coefficient = 0.878

	Orifice area, cm²					
Set pressure (barg)	D (0.781)	E (1.394)	F (2.168)	G (3.574)	H (5.567)	J (9.123)
0.2	39	69	108	177	276	453
0.3	47	84	131	215	335	549
0.4	54	96	149	246	383	628
0.6	65	115	180	296	461	756
1.0	81	144	224	370	576	944
1.5	98	175	272	448	698	1144
2.0	116	207	322	530	826	1354
2.5	135	242	376	620	966	1582
3.0	155	277	431	711	1107	1814
3.5	175	312	486	801	1248	2045
4.0	195	348	541	892	1389	2276
4.5	215	383	596	982	1530	2508
5.0	234	419	651	1073	1671	2739
5.5	254	454	706	1164	1812	2970
6.0	274	489	761	1254	1954	3201
6.5	294	525	816	1345	2095	3433
7.0	314	560	871	1435	2236	3664
7.5	333	595	926	1526	2377	3895
8.0	353	631	981	1617	2518	4127
8.5	373	666	1036	1707	2659	4358
9.0	393	701	1091	1798	2800	4589
9.5	413	737	1146	1888	2942	4820
10.0	432	772	1201	1979	3083	5052
10.5	452	807	1255	2070	3224	5283
11.0	472	843	1310	2160	3365	5514
11.5	492	878	1365	2251	3506	5746
12.0	512	913	1420	2341	3647	5977
12.5	531	949	1475	2432	3788	6208
13.0	551	984	1530	2523	3929	6439
13.5	571	1019	1585	2613	4071	6671
14.0	591	1055	1640	2704	4212	6902
14.5	611	1090	1695	2795	4353	7133
15.0	630	1125	1750	2885	4494	7365
16.0	670	1196	1860	3066	4776	7827
17.0	710	1267	1970	3248	5059	8290
18.0	749	1337	2080	3429	5341	8752
19.0	789	1408	2190	3610	5623	9215
20.0	828	1479	2300	3791	5905	9678

NOTE

1. No code stamp or 'NB' on nameplate below 1.1 barg set.

Capacities

ASME SECTION I STEAM (lb/h) Flow Coefficient = 0.878

	Orifice area, in²					
Set pressure (psig)	D (0.121)	E (0.216)	F (0.336)	G (0.554)	H (0.863)	J (1.414)
15	173	310	482	794	1237	2027
20	201	358	558	919	1432	2346
25	228	407	634	1045	1627	2666
30	256	456	710	1170	1822	2986
35	283	505	785	1295	2017	3306
40	310	554	861	1420	2213	3625
45	338	603	937	1546	2408	3945
50	365	651	1013	1671	2603	4265
55	392	700	1089	1796	2798	4584
60	420	749	1165	1921	2993	4904
65	447	798	1241	2047	3188	5224
70	475	848	1319	2174	3387	5550
75	503	898	1397	2303	3588	5879
80	531	948	1475	2432	3789	6208
85	559	999	1553	2561	3990	6538
90	588	1049	1632	2690	4191	6867
95	616	1099	1710	2819	4392	7196
100	644	1150	1788	2948	4593	7525
105	672	1200	1866	3077	4794	7855
110	700	1250	1945	3206	4995	8184
115	728	1300	2023	3335	5196	8513
120	757	1351	2101	3464	5397	8842
125	785	1401	2179	3593	5598	9172
130	813	1451	2258	3722	5799	9501
135	841	1502	2336	3851	6000	9830
140	869	1552	2414	3980	6201	10160
145	898	1602	2492	4109	6402	10489
150	926	1653	2571	4238	6603	10818
160	982	1753	2727	4497	7004	11477
170	1038	1854	2884	4755	7406	12135
180	1095	1954	3040	5013	7808	12794
190	1151	2055	3197	5271	8210	13452
200	1208	2156	3353	5529	8612	14111
210	1264	2256	3510	5787	9014	14769
220	1320	2357	3666	6045	9416	15428
230	1377	2457	3823	6303	9818	16087
240	1433	2558	3979	6561	10220	16745
250	1489	2659	4136	6819	10622	17404
260	1546	2759	4292	7077	11024	18062
270	1602	2860	4448	7335	11426	18721
280	1658	2960	4605	7593	11828	19379
290	1715	3061	4761	7851	12230	20038
300	1771	3162	4918	8109	12632	20696

Capacities - metric units

ASME SECTION I STEAM (kg/h) Flow Coefficient = 0.878

	Orifice area, cm²					
Set pressure (barg)	D (0.781)	E (1.394)	F (2.168)	G (3.574)	H (5.567)	J (9.123)
1.5	95	170	265	437	680	1115
2.0	113	202	315	519	809	1325
2.5	131	235	365	601	937	1535
3.0	149	267	415	684	1065	1746
3.5	167	299	465	766	1193	1956
4.0	185	331	515	849	1322	2166
4.5	203	363	565	931	1450	2376
5.0	222	396	616	1015	1581	2592
5.5	240	429	667	1100	1714	2808
6.0	259	462	719	1185	1846	3025
6.5	277	495	770	1270	1978	3241
7.0	296	528	822	1355	2110	3458
7.5	315	561	873	1440	2242	3675
8.0	333	595	925	1524	2374	3891
8.5	352	628	976	1609	2507	4108
9.0	370	661	1028	1694	2639	4324
9.5	389	694	1079	1779	2771	4541
10.0	407	727	1131	1864	2903	4757
10.5	426	760	1182	1949	3035	4974
11.0	444	793	1233	2033	3167	5191
11.5	463	826	1285	2118	3300	5407
12.0	481	859	1336	2203	3432	5624
12.5	500	892	1388	2288	3564	5840
13.0	519	925	1439	2373	3696	6057
13.5	537	959	1491	2458	3828	6273
14.0	556	992	1542	2542	3960	6490
14.5	574	1025	1594	2627	4092	6707
15.0	593	1058	1645	2712	4225	6923
15.5	611	1091	1697	2797	4357	7140
16.0	630	1124	1748	2882	4489	7356
16.5	648	1157	1800	2967	4621	7573
17.0	667	1190	1851	3052	4753	7789
18.0	704	1256	1954	3221	5018	8223
19.0	741	1323	2057	3391	5282	8656
20.0	778	1389	2160	3561	5546	9089

Capacities

ASME SECTION IV STEAM, LB/H (kg/h) - Models 6933, 6934 and 6935

	Orifice, area in² (cm²)					
Set pressure psig (barg)	D 0.121 (0.781)	E 0.216 (1.394)	F 0.336 (2.168)	G 0.554 (3.574)	H 0.863 (5.567)	J 1.414 (9.123)
15 (1.0)	190 (86)	339 (153)	527 (239)	869 (394)	1353 (613)	2217 (1004)

ASME section I and VIII, steam, ASME section VIII, air/gas National Board Certified. Models 6933, 6934, 6935 ASME section IV, National Board Certified

SELECTION GUIDE

Example:				**6010**	**H**	**G**	**M**	**01**	**-**	**A**	**M**	**0015**
Model												
6010	**6130**	**6230**										
6021	**6186**	**6933**										
6030	**6283**	**6934**										
6182	**6221**	**6935**										
6121												
Orifice												
D	**G**											
E	**H**											
F	**J**											
Inlet size												
C	½" (12.7)	**G**	1 ½" (38.1)									
D	¾" (19.0)	**H**	2" (50.8)									
E	1" (25.4)	**J**	2 ½" (63.5)									
F	1¼" (31.8)											
Seat material												
M	Metal											
E	EPR											
V	Viton® (FKM)											
T	Teflon® (PFA) (models 6021, 6121, 6221, 6934 only)											
Variation (01 to 99)												
01	Plain lever											
02	Plain lever with vibration dampener											
03	Plain lever with gag											
60	BSP threads											
Design revision												
Indicates non-interchangeable revision												
Dash (-) if original design												
Valve service												
A	Steam ASME section I											
K	Air/gas ASME section VIII											
L	Steam ASME section VIII											
G	Steam ASME section IV (models 6933, 6934, 6935 only)											
P	Steam, non-code											
N	Air, non-code											
Spring material												
M	SS											
Set pressure												
0015	15 psig (1.0 barg) only for models 6933, 6934, 6935											

API 602 GATE VALVES

FORGED CARBON, STAINLESS STEE OR ALLOY STEEL
1/4" - 2" (6 - 50 mm)
ASME CLASSES 150 -2680

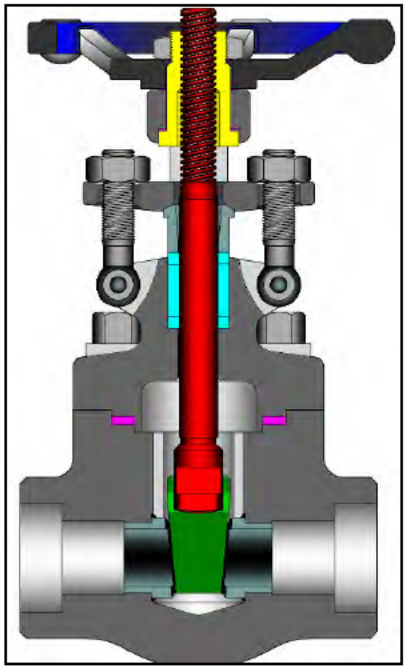

Class	Bore	Fig. No.
150	Standard	GA01
	Full	GAL1
300	Standard	GA03
	Full	GAL3
600	Standard	GA06
	Full	GAL6
800	Standard	GA08
	Full	GAL8
1500	Standard	GA15
	Full	GAL5
1680	Standard	GA16
2500	Standard	GA25
2690	Standard	GA26

STANDARD MATERIALS (Other materials available)

PART	MATERIALS			
Body	A105	A182 F11	A182 F22	A182F316 (1)
Bonnet	A105	A182 F11	A182 F22	A182 F316
Wedge	SST 420			A182 F316
Seat Ring	SST 410 + Stellite 6 Faced			SST 316
Stem	A182 F6a			A182 F316
Stem Bushing	A 439 Ductile NI-Resist Gr. D2			
Gland Flange	A105			Series 300 SST
Eye Bolt	A193 Gr. B7	A193 Gr. B16		A193 Gr. B8M
Eye Bolt Nut	A194 Gr. 2H	A194 Gr. 7		A194 Gr.8M
Gland	SST 420			SST 316
Packing	Graphite			PTFE
Packing Washer / Packing Spacer	SST 410			SST 316
Gasket (2)	Spiral Wound SST with Graphite			Spiral Wound SST with PTFE
Hand Wheel	Malleable Iron or Steel			
Hand Wheel Nut	Malleable Iron or Steel			
Key	Steel			
Body / Bonnet Bolting (2)	A193 Gr. B7	A193 Gr. B16		A193 Gr. B8M
Identification Plate	Series 300 SST			

1. Threaded and weld end valve bodies A182 F316L
2. Welded bonnet design also available.

Design Specifications

Item	Applicable Specification
Wall thickness	API 602
Pressure - temperature ratings	ASME B16.34
General valve design	API 602 & B16.34
End to End dimensions	ASME B16.10
Flange design	ASME B16.5
Thread design	ASME B1.20.1
Butt Weld design	ASME B16.25
Socket Weld design	ASME B16.11
Materials	ASTM

NOTE: See page 43 for flow, safety and maintenance information.

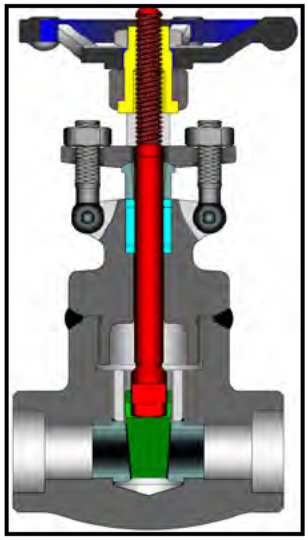

Welded Bonnet Design

DESIGN FEATURES:

- Wedges are accurately guided thru the entire stroke.
- Standard trim is stellite faced seat rings, 13% chrome wedge seat surfaces, and 13% chrome stem (API trim 8). Other trims available on request.
- Seat faces lapped for smooth finish and superior sealing.
- Stems are non-rotating with surface finish to maximize packing seal for low fugitive emissions.
- Each valve is shell, seat and backseat pressure tested per industry standard API 598.
- Gland is two piece gland / gland flange design for optimal alignment and uniform packing compression.
- End Flanges have the following raised faces per ASME B16.5:
  Classes 150-300: 1/16" (2mm).
  Classes 600: 1/4" (7mm).
- Weld ends are available per ASME B16.25/B16.11 or per customer's specification.
- Extended body ends available on gate valves.
- Other available options as follows:
  - » Alternate valve materials such as chrome and stainless steel alloys
  - » Alternate trim materials
  - » NACE service
  - » Special cleaning for applications such as oxygen or chlorine
  - » Other options available as specified.

GATE VALE DIMENSIONS CLASS 150 - 800

SIZE	ASME 150 Bolted Bonnet Standard Bore				ASME 300 Bolted Bonnet Standard Bore				ASME 600 Bolted Bonnet Standard Bore			
in / mm	A FE	C	D	E	A FE	C	D	E	A FE	C	D	E
½	4.25	6	0.5	3.9	5.5	6	0.5	3.9	6.5	6	0.5	3.9
13	108	153	13	100	140	153	13	100	165	153	13	100
¾	4.62	6	0.5	3.9	6	6	0.5	3.9	7.5	6	0.5	3.9
19	117	153	13	100	152	153	13	100	190	153	13	100
1	5	7.3	0.71	4.9	6.5	7.3	0.71	4.9	8.5	7.3	0.71	4.9
25	127	185	18	125	165	185	18	125	216	185	18	125
1¼	5.5	8.7	0.94	6.3	7	8.7	0.94	6.3	9	8.7	0.94	6.3
32	140	222	24	160	178	222	24	160	229	222	24	160
1½	6.5	9.4	1.14	6.3	7.5	9.4	1.14	6.3	9.5	9.4	1.14	6.3
38	165	240	29	160	190	240	29	160	241	240	29	160
2	7	11	1.46	7.1	8.5	11	1.46	7.1	11.5	11	1.46	7.1
50	178	279	37	180	216	279	37	180	292	279	37	180

SIZE	ASME 800 Bolted Bonnet Standard Bore				ASME 800 Bolted Bonnet Full Bore				ASME 800 Welded Bonnet Standard Bore				ASME 800 Welded Bonnet Full Bore			
in / mm	A WE	C	D	E	A WE	C	D	E	A WE	C	D	E	A WE	C	D	E
¼	3.11	5.9	0.31	3.9	-	-	-	-	3.11	6.2	0.31	3.9	-	-	-	-
6	79	149	8	100	-	-	-	-	79	157	8	100	-	-	-	-
3/8	3.11	5.9	0.39	3.9	-	-	-	-	3.11	6.2	0.39	3.9	-	-	-	-
10	79	149	10	100	-	-	-	-	79	157	10	100	-	-	-	-
½	3.11	6	0.5	3.9	3.62	6	0.5	3.9	3.11	6.3	0.5	3.9	3.62	6.3	0.5	3.9
13	79	153	13	100	92	153	13	100	79	161	13	100	92	161	13	100
¾	3.62	6	0.5	3.9	4.37	7.3	0.71	4.9	3.62	6.3	0.5	3.9	4.37	7.5	0.71	4.9
19	92	153	13	100	111	185	18	125	92	161	13	100	111	190	18	125
1	4.37	7.3	0.71	4.9	4.72	8.7	0.94	6.3	4.37	7.5	0.71	4.9	4.72	8.7	0.94	6.3
25	111	185	18	125	120	222	24	160	111	190	18	125	120	220	24	160
1¼	4.72	8.7	1.14	6.3	4.72	9.4	1.14	6.3	4.72	8.7	1.14	6.3	4.72	9.4	1.14	6.3
32	120	222	29	160	120	240	29	160	120	220	29	160	120	240	29	160
1½	4.72	9.4	1.14	6.3	5.51	11	1.46	7.1	4.72	9.4	1.14	6.3	5.51	11	1.46	7.1
38	120	240	29	160	140	279	37	180	120	240	29	160	140	279	37	180
2	5.51	11	1.46	7.1	6.3	13.1	1.89	7.9	5.51	11	1.46	7.1	6.3	12.6	1.89	7.9
50	140	279	37	180	160	333	48	200	140	279	37	180	160	319	48	200

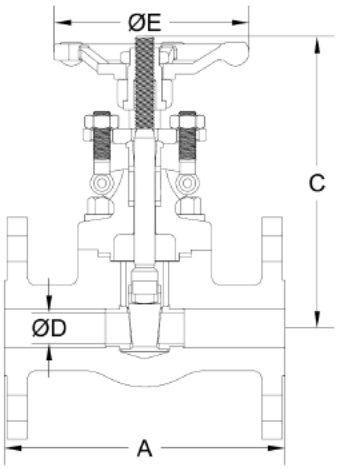

Bolted Bonnet Flanged Ends Design

WE = Socket Weld / Threaded Ends
FE = Flanged ends

C = Center to top open

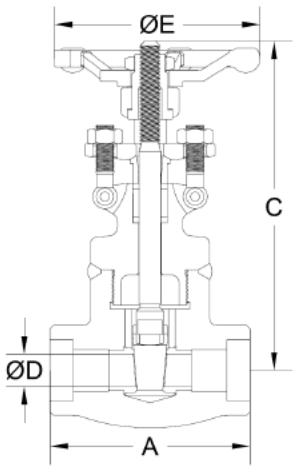

Welded Bonnet Socket Weld Ends Design

ADDITIONAL SIZES, MATERIALS AND CLASSES AVAILABLE UPON REQUEST.

GATE VALVE DIMENSIONS (CLASS 1500 - 2680)

SIZE	ASME 1500 & 1690																
	Bolted Bonnet									Welded Bonnet							
	Standard Bore					Full Bore				Standard Bore				Full Bore			
in	A		C	D	E	A	C	D	E	A	C	D	E	A	C	D	E
mm	FE	WE				WE				WE				WE			
¼	-	3.11	6.9	0.31	3.9	-	-	-	-	3.11	6.9	0.31	3.9	-	-	-	-
6	-	79	175	8	100	-	-	-	-	79	175	8	100	-	-	-	-
3/8	-	3.62	7	0.5	3.9	-	-	-	-	3.62	6.9	0.5	3.9	-	-	-	-
10	-	92	178	13	100	-	-	-	-	92	175	13	100	-	-	-	-
½	8.5	3.62	7.1	0.5	4.9	4.37	7.1	0.5	4.9	3.62	7.1	0.5	4.9	4.37	7.1	0.5	4.9
13	216	92	181	13	125	111	181	13	125	92	181	13	125	111	181	13	125
¾	9	4.37	7.1	0.5	4.9	4.72	8.6	0.71	6.3	4.37	7.1	0.5	4.9	4.72	8.6	0.71	6.3
19	229	111	181	13	125	120	218	18	160	111	181	13	125	120	218	18	160
1	10	4.72	8.6	0.71	6.3	4.72	9.3	0.94	6.3	4.72	8.6	0.71	6.3	4.72	9.3	0.94	6.3
25	254	120	218	18	160	120	237	24	160	120	218	18	160	120	237	24	160
1¼	11	4.72	9.3	0.94	6.3	5.51	10.8	1.14	7.1	4.72	9.3	0.94	6.3	5.51	10.8	1.14	7.1
32	279	120	237	24	160	140	274	29	180	120	237	24	160	140	274	29	180
1½	12	5.51	10.8	1.14	7.1	6.3	12.6	1.46	7.9	5.51	10.8	1.14	7.1	6.3	12.6	1.46	7.9
38	305	140	274	29	180	160	319	37	200	140	274	29	180	160	319	37	200
2	14.5	6.3	12.6	1.46	7.9	9.1	13.6	1.89	7.9	6.3	12.6	1.46	7.9	9.1	13.6	1.89	7.9
50	368	160	319	37	200	230	345	48	200	160	319	37	200	230	345	48	200

SIZE	ASME 2500 & 2680							
	Bolted Bonnet				Welded Bonnet			
	Standard Bore				Standard Bore			
in	A	C	D	E	A	C	D	E
mm	WE				WE			
½	5.91	11.2	0.55	6.3	5.91	10	0.55	6.3
13	150	284	14	160	150	253	14	160
¾	5.91	11.2	0.55	6.3	5.91	10	0.55	6.3
19	150	284	14	160	150	253	14	160
1	6.69	12.9	0.75	7.9	6.69	11.5	0.75	7.9
25	170	327	19	200	170	291	19	200
1¼	7.87	14.7	1	9.8	7.87	13.3	1	9.8
32	200	374	25	250	200	339	25	250
1½	7.87	14.8	1.1	9.8	7.87	13.5	1.1	9.8
38	200	377	28	250	200	342	28	250
2	9.84	17.1	1.38	11.8	9.84	15.7	1.38	11.8
50	250	434	35	300	250	398	35	300

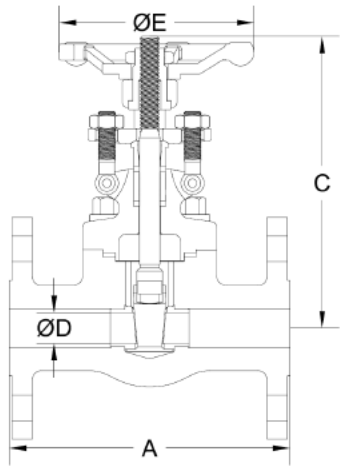

Bolted Bonnet Flanged Ends Design

WE = Socket Weld / Threaded Ends
FE = Flanged ends

C = Center to top open

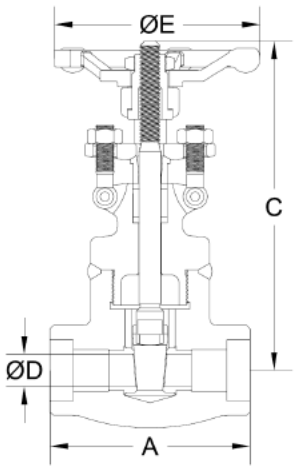

Welded Bonnet Socket Weld Ends Design

ADDITIONAL SIZES, MATERIALS AND CLASSES AVAILABLE UPON REQUEST.

API 602 GATE VALVES

FORGED CARBON, STAINLESS STEEL OR ALLOY STEEL
1/4" - 2" (6 - 50 mm)
ASME CLASSES 150 - 2680

SIZE	ASME 150			ASME 300			ASME 600			ASME 800								
	Bolted Bonnet			Bolted Bonnet			Bolted Bonnet			Bolted Bonnet						Welded Bonnet				
	Standard Bore			Standard Bore			Standard Bore			Standard Bore			Full Bore			Standard Bore			Full Bore		
in	WT	LB	CV	WT	LB	CV	WT	LB	CV	WT	LB	CV	WT	LB	CV	WT	LB	CV	WT	LB	CV
mm	FE	KG		FE	KG		FE	KG		WE	KG		WE	KG		WE	KG		WE	KG	
¼	-		-	-		-	-		-	4.2		5	-		-	3.7		5	-		-
6	-			-			-			1.9			-			1.7			-		
3/8	-		-	-		-	-		-	4.2		8	-		-	3.7		8	-		-
10	-			-			-			1.9			-			1.7			-		
½	6.6		13	7.9		13	9.3		13	4.4		13	7.3		13	4		13	7.1		13
13	3			3.6			4.2			2			3.3			1.8			3.2		
¾	7.7		13	10.8		13	12.8		13	4.9		13	8.4		25	4.4		13	8.2		25
19	3.5			4.9			5.8			2.2			3.8			2			3.7		
1	12.1		30	15.4		30	19.4		30	7.9		30	12.8		45	7.5		30	12.6		45
25	5.5			7			8.8			3.6			5.8			3.4			5.7		
1¼	15		70	20.7		70	26.7		70	13.7		70	14.8		70	11.7		70	14.6		70
32	6.8			9.4			12.1			6.2			6.7			5.3			6.6		
1½	22.9		70	29.3		70	34.4		70	13.7		70	22.7		110	13.2		70	22.5		110
38	10.4			13.3			15.6			6.2			10.3			6			10.2		
2	31.7		120	39.7		80	43		120	21.4		120	33.5		220	20.9		120	33.3		220
50	14.4			18			19.5			9.7			15.2			9.5			15.1		

SIZE	ASME 1500 & 1690												ASME 2500 & 2680					
	Bolted Bonnet						Welded Bonnet						Bolted Bonnet			Welded Bonnet		
	Standard Bore				Full Bore		Standard Bore			Full Bore			Standard Bore			Standard Bore		
in	WT	LB	WT	LB	CV	WT	LB	CV	WT	LB	CV	WT	LB	CV	WT	LB	CV	WT	LB	CV
mm	FE	KG	WE	KG		WE	KG		WE	KG		WE	KG		WE	KG		WE	KG	
¼	-		6.6		5	-		-	6.2		5	-		-	-		-	-		-
6	-		3			-			2.8			-			-			-		
3/8	-		7.1		13	-		-	6.6		13	-		-	-		-	-		-
10	-		3.2			-			3			-			-			-		
½	15.9		7.7		13	9.5		13	7.3		13	9.3		13	21.6		20	15		20
13	7.2		3.5			4.3			3.3			4.2			9.8			6.8		
¾	25.4		8.8		13	13.9		25	8.2		13	13.7		25	22		20	15.4		20
19	11.5		4			6.3			3.7			6.2			10			7		
1	34.4		13.2		25	16.1		45	12.6		25	15.9		45	49.6		25	22		25
25	15.6		6			7.3			5.7			7.2			22.5			10		
1¼	35.7		15.4		45	24.7		70	14.8		45	24.5		70	69.9		55	43.4		55
32	16.2		7			11.2			6.7			11.1			31.7			19.7		
1½	49.8		23.8		70	35.1		110	23.1		70	34.8		110	70.5		70	57.3		70
38	22.6		10.8			15.9			10.5			15.8			32			26		
2	62.2		34.2		120	36.4		220	33.5		120	36.2		220	83.8		120	69.9		120
50	28.2		15.5			16.5			15.2			16.4			38			31.7		

FE = Flanged Ends
WE = Socket Weld / Threaded Ends

WT = Weight
CV = Flow Coefficient

API 602 SWING CHECK VALVES

FORGED CARBON, STAINLESS STEEL OR ALLOY STEEL
1/4" - 2" (6 - 50mm), ASME CLASSES 150 - 2680

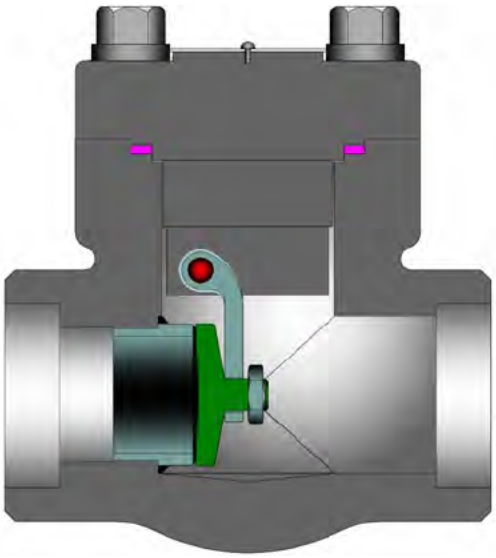

Class	Bore	Fig. No.
150	Standard	SW01
	Full	SWL1
300	Standard	SW03
	Full	SWL3
600	Standard	SW06
	Full	SWL6
800	Standard	SW08
	Full	SWL8
1500	Standard	SW15
	Full	SWL5
1680	Standard	SW16
2500	Standard	SW25
2690	Standard	SW26

STANDARD MATERIALS (Other materials available)

PART	MATERIALS			
Body	A105	A182 F11	A182 F22	A182 F316 (1)
Cap	A105	A182 F11	A182 F22	A182 F316
Disc	A276 T420			A276 T316
Seat Ring	SST 410 + Stellite 6 Faced			316 SST
Gasket (2)	Spiral Wound SST with Graphite			Spiral Wound SST with PTFE
Carrier	304 SST			316 SST
Carrier Pin	304 SST			316 SST
Disc Nut	A182 F304 or A194 Gr. 8			A182 F316 or A194 Gr. 8M
Body / Cap Bolting (2)	A193 Gr. B7	A193 Gr. B16		A193 Gr. B8M
Identification Plate	Series 300 SST			

1. Threaded and weld end valve bodies A182 F316L
2. Welded bonnets also available.

NOTE: See page 43 for flow, safety and maintenance information.

Design Specifications

Item	Applicable Specification
Wall thickness	API 602
Pressure - temperature ratings	ASME B16.34
General valve design	API 602 & B16.34
End to End dimensions	ASME B16.10
Flange design	ASME B16.5
Thread design	ASME B1.20.1
Butt Weld design	ASME B16.25
Socket Weld design	ASME B16.11
Materials	ASTM

DESIGN FEATURES:

- Standard trim is stellite faced seat rings and 13% chrome disc (API trim 8). Other trims available on request.
- Seat faces lapped for smooth finish and superior sealing.
- Wall thickness per heavy wall API 602 requirements.
- Swivel disc for improved seat alignment and longer life.
- Each valve is shell and seat pressure tested per industry standard API 598.
- Check valve are suitable for service in horizontal line with cap vertical or in a vertical line with flow upward.
- Carrier Pin is confined within the body wall and is not accessible from the exterior, thus no side body penetrations, eliminating a common leak path.
- End Flanges have the following raised faces per ASME B16.5:
  Classes 150-300: 1/16" (2mm).
  Classes 600: 1/4" (7mm).
- Other available options as follows:
  - » Alternate valve materials such as chrome and stainless steel alloys
  - » Alternate trim materials
  - » NACE service
  - » Special cleaning for applications such as oxygen or chlorine
  - » Other options available as specified

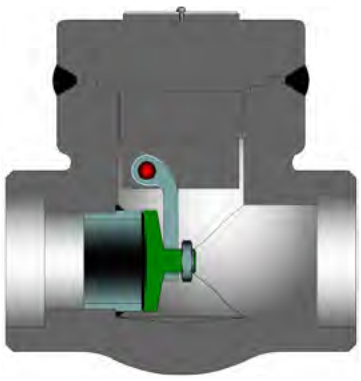

Welded Bonnet Design

SWING CHECK VALVE DIMENSIONS

(CLASSES 150 - 800)

SIZE	ASME 150 Bolted Bonnet Standard Bore			ASME 300 Bolted Bonnet Standard Bore			ASME 600 Bolted Bonnet Standard Bore		
in	A	C	D	A	C	D	A	C	D
mm	FE			FE			FE		
½	4.25	2.2	0.39	6	2.2	0.39	6.5	2.2	0.39
13	108	55	10	152	55	10	165	55	10
¾	4.62	2.2	0.5	7	2.2	0.5	7.5	2.2	0.5
19	117	55	13	178	55	13	190	55	13
1	5	2.8	0.69	8	2.8	0.69	8.5	2.8	0.69
25	127	72	18	203	72	18	216	72	18
1¼	5.5	3.2	0.91	8.5	3.2	0.91	9	3.2	0.91
32	140	81	23	216	81	23	229	81	23
1½	6.5	3.6	1.12	9	3.7	1.12	9.5	3.7	1.12
38	165	91	29	229	94	29	241	94	29
2	8	4.4	1.26	10.5	4.4	1.38	11.5	4.4	1.38
50	203	112	32	267	112	35	292	112	35

SIZE	ASME 800 Bolted Bonnet Standard Bore			ASME 800 Bolted Bonnet Full Bore			ASME 800 Welded Bonnet Standard Bore			ASME 800 Welded Bonnet Full Bore		
in	A	C	D	A	C	D	A	C	D	A	C	D
mm	WE			WE			WE			WE		
¼	3.11	2.2	0.26	-	-	-	3.11	2.2	0.26	-	-	-
6	79	55	7	-	-	-	79	55	7	-	-	-
3/8	3.11	2.2	0.39	-	-	-	3.11	2.2	0.39	-	-	-
10	79	55	10	-	-	-	79	55	10	-	-	-
½	3.11	2.2	0.39	3.62	2.2	0.5	3.11	2.2	0.39	3.62	2.2	0.5
13	79	55	10	92	55	13	79	55	10	92	55	13
¾	3.62	2.2	0.5	4.37	3	0.69	3.62	2.2	0.5	4.37	3	0.69
19	92	55	13	111	72	18	92	55	13	111	72	18
1	4.37	3	0.69	4.72	3.2	0.91	4.37	3	0.69	4.72	3.2	0.91
25	111	72	18	120	81	23	111	72	18	120	81	23
1¼	4.72	3.2	0.91	4.72	3.7	1.12	4.72	3.2	0.91	4.72	3.7	1.12
32	120	81	23	120	94	29	120	81	23	120	94	29
1½	4.72	3.7	1.12	5.51	4.4	1.4	4.72	3.7	1.12	5.51	4.4	1.42
38	120	94	29	140	112	36	120	94	29	140	112	36
2	5.51	4.4	1.38	6.3	5.2	1.85	5.51	4.4	1.38	6.3	5.2	1.85
50	140	112	35	160	132	47	140	112	35	160	132	47

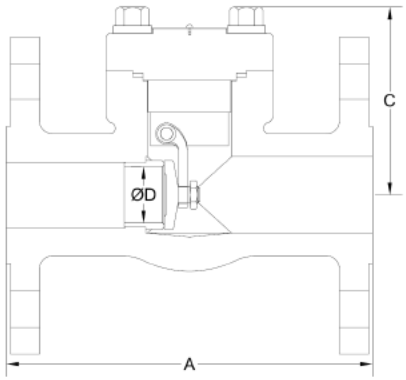

Bolted Bonnet Flanged Ends Design

WE = Socket Weld / Threaded Ends
FE = Flanged Ends

C = Center to top

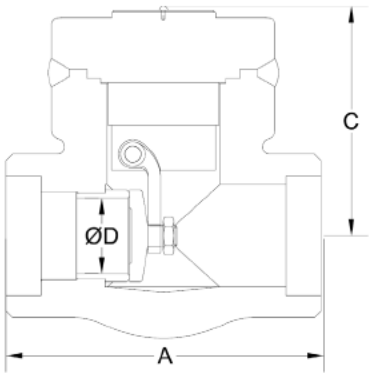

Welded Bonnet Socket Weld Ends Design

ADDITIONAL SIZES, MATERIALS AND CLASSES AVAILABLE UPON REQUEST.

SWING CHECK VALVE DIMENSIONS

(CLASSES 1500 - 2860)

SIZE	ASME 1500 & 1690												
	Bolted Bonnet							Welded Bonnet					
	Standard Bore				Full Bore			Standard Bore			Full Bore		
in	A		C	D	A	C	D	A	C	D	A	C	D
mm	FE	WE			WE			WE			WE		
¼	-	3.11	2.9	0.26	-	-	-	3.11	2.9	0.39	-	-	-
6	-	79	73	7	-	-	-	79	65	10	-	-	-
3/8	-	3.11	2.9	0.39	-	-	-	3.11	2.9	0.5	-	-	-
10	-	79	73	10	-	-	-	79	65	13	-	-	-
½	8.5	3.62	2.9	0.39	4.37	2.9	0.5	3.62	2.9	0.39	4.37	2.9	0.5
13	216	92	73	10	111	73	13	92	65	10	111	65	13
¾	9	4.37	2.9	0.5	4.72	3.3	0.69	4.37	2.9	0.51	4.72	3.3	0.69
19	229	111	73	13	120	84	18	111	65	13	120	77	18
1	10	4.72	3.3	0.69	4.72	3.8	0.91	4.72	3.3	0.69	4.72	3.8	0.91
25	254	120	84	18	120	97	23	120	77	18	120	89	23
1¼	11	4.72	3.8	0.91	5.51	4.5	1.12	4.72	3.8	0.91	5.51	4.5	1.12
32	279	120	97	23	140	115	29	120	89	23	140	103	29
1½	12	5.51	4.5	1.12	6.3	5.2	1.38	5.51	4.5	1.12	6.3	5.2	1.38
38	305	140	115	29	160	132	35	140	103	29	160	115	35
2	14.5	6.3	5.2	1.38	8.66	5.2	1.85	6.3	5.2	1.38	8.66	5.2	1.85
50	368	160	132	35	220	152	47	160	115	35	220	132	47

SIZE	ASME 2500 & 2680					
	Bolted Bonnet			Welded Bonnet		
	Standard Bore			Standard Bore		
in	A	C	D	A	C	D
mm	WE			WE		
½	5.91	3.4	0.55	5.91	3.4	0.55
13	150	87	14	150	87	14
¾	5.91	3.6	0.55	5.91	3.4	0.55
19	150	92	14	150	87	14
1	6.69	4.4	0.75	6.69	3.6	0.75
25	170	113	19	170	92	19
1¼	7.87	4.4	1.1	7.87	4.4	1.1
32	200	113	28	200	113	28
1½	7.87	5.2	1.1	7.87	4.4	1.1
38	200	131	28	200	113	28
2	9.84	5.9	1.5	9.84	5.2	1.5
50	250	151	38	250	131	38

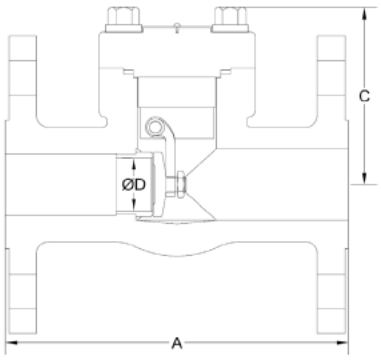

Bolted Bonnet Flanged Ends Design

WE = Socket Weld / Threaded Ends
FE = Flanged Ends

C = Center to top open

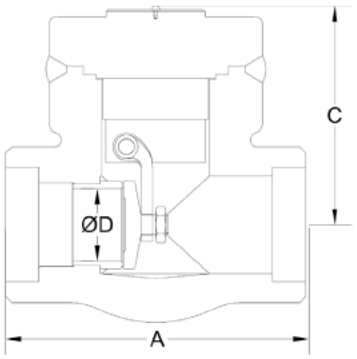

Welded Bonnet Socket Weld Ends Design

ADDITIONAL SIZES, MATERIALS AND CLASSES AVAILABLE UPON REQUEST.

API 602 SWING CHECK VALVES

FORGED CARBON, STAINLESS STEEL OR ALLOY STEEL
1/4" - 2" (6 - 50mm), ASME CLASSES 150 - 2680

SIZE	ASME 150			ASME 300			ASME 600			ASME 800								
	Bolted Bonnet			Bolted Bonnet			Bolted Bonnet			Bolted Bonnet						Welded Bonnet				
	Standard Bore			Standard Bore			Standard Bore			Standard Bore			Full Bore			Standard Bore			Full Bore		
in	WT	LB	CV	WT	LB	CV	WT	LB	CV	WT	LB	CV	WT	LB	CV	WT	LB	CV	WT	LB	CV
mm	FE	KG		FE	KG		FE	KG		WE	KG		WE	KG		WE	KG		WE	KG	
¼	-		-	-		-	-		-	2.9		0.7	-		-	2.9		0.7	-		-
6	-			-			-			1.3			-			1.3			-		
3/8	-		-	-		-	-		-	2.9		1.5	-		-	2.9		1.5	-		-
10	-			-			-			1.3			-			1.3			-		
½	7.1		1.5	7.7		1.5	7.1		1.5	2.6		1.5	3.7		2.6	2.6		1.5	3.7		2.6
13	3.2			3.5			3.2			1.2			1.7			1.2			1.7		
¾	9.3		2.7	10.1		2.7	12.3		2.7	3.7		2.7	5.3		4.9	3.7		2.7	5.3		4.9
19	4.2			4.6			5.6			1.7			2.4			1.7			2.4		
1	17.6		5.1	19		5.1	20.5		5.1	5.3		5.1	8.8		8.9	5.3		5.1	8.8		8.9
25	8			8.6			9.3			2.4			4			2.4			4		
1¼	19.2		9.1	20.7		9.1	22.5		9.1	8.8		9.1	11.2		13.7	8.8		9.1	11.2		13.7
32	8.7			9.4			10.2			4			5.1			4			5.1		
1½	26		14	29.8		14	34		14	11.2		14	19.2		21.9	11.2		14	19.2		21.9
38	11.8			13.5			15.4			5.1			8.7			5.1			8.7		
2	31.1		22.4	38.8		22.4	53.6		22.4	19.4		22.4	33.7		40	19.4		22.4	33.7		40
50	14.1			17.6			24.3			8.8			15.3			8.8			15.3		

SIZE	ASME 1500 & 1687												ASME 2500 & 2680					
	Bolted Bonnet							Welded Bonnet					Bolted Bonnet			Welded Bonnet		
	Standard Bore				Full Bore			Standard Bore			Full Bore		Standard Bore			Standard Bore		
in	WT	LB	WT	LB	CV	WT	LB	CV	WT	LB	CV	WT	LB	CV	WT	LB	CV	WT	LB	CV
mm	FE	KG	WE	KG		WE	KG		WE	KG		WE	KG		WE	KG		WE	KG	
¼	-		4.9		0.7	-		-	4.4		0.7	-		-	-		-	-		-
6	-		2.2			-			2			-			-			-		
3/8	-		4.4		1.5	-		-	4.4		1.5	-		-	-		-	-		-
10	-		2			-			2			-			-			-		
½	20.3		4.9		1.5	6		1.5	4.4		1.5	6		1.5	16.1		1.8	14.3		3
13	9.2		2.2			2.7			2			2.7			7.3			6.5		
¾	24.3		6		2.7	9.5		2.7	6		2.7	9.5		2.7	16.1		1.9	14.3		3.1
19	11		2.7			4.3			2.7			4.3			7.3			6.5		
1	31.3		9.7		5.1	13.7		5.1	9.7		5.1	13.7		5.1	25.4		3.2	23.1		6
25	14.2		4.4			6.2			4.4			6.2			11.5			10.5		
1¼	34.8		13.9		9.1	22.5		9.1	13.9		9.1	22.5		9.1	41.7		4.3	38.6		10.5
32	15.8		6.3			10.2			6.3			10.2			18.9			17.5		
1½	47		22.7		14	33.7		14	22.7		14	33.7		14	41.7		10.7	38.6		13.5
38	21.3		10.3			15.3			10.3			15.3			18.9			17.5		
2	61.3		33.7		22.4	36.8		22.4	33.7		22.4	36.8		22.4	58.9		14.2	62.8		22.4
50	27.8		15.3			16.7			15.3			16.7			26.7			28.5		

FE = Flanged Ends
WE = Socket Weld / Threaded Ends
WT = Weight
CV = Flow Coefficient

API 602 GLOBE VALVES

FORGED CARBON, STAINLESS STEEL OR ALLOY STEEL
1/4" - 2" (6 - 50 mm), ASME CLASSES 150 - 2680

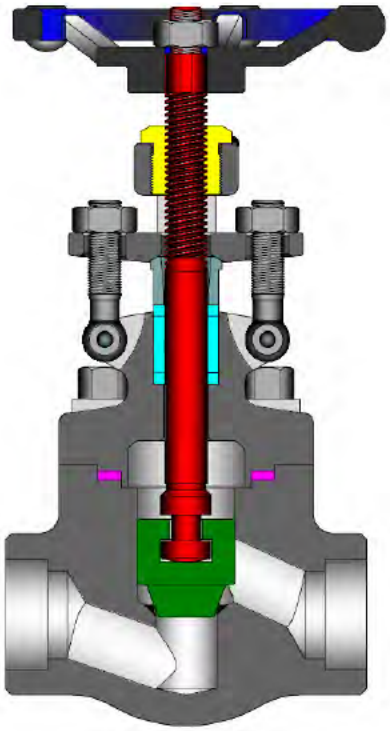

STANDARD MATERIALS (Other materials available)

PART	MATERIALS			
Body	A105 + Stellite 6 Faced	A182 F11 + Stellite 6 Faced	A182 F22 + Stellite 6 Faced	A182 F316 (1)
Bonnet	A105	A182 F11	A182 F22	A182 F316
Disc	SST 420			A182 F316
Stem	A182 F6a			A182 F316
Gland Flange	A105			A182 F316
Eye Bolt	A193 Gr. B7	A193 Gr. B16		A193 Gr. B8M
Eye Bolt Nut	A194 Gr. 2H	A194 Gr. 7		A194 Gr. 8M
Gland	SST 420			Series 300 SST
Packing	Graphite			PTFE
Gasket (2)	Spiral Wound SST with Graphite			Spiral Wound SST with PTFE
Hand Wheel	Malleable Iron or Steel			
Hand Wheel Nut	Malleable Iron or Steel			
Body / Bonnet Bolting (2)	A193 Gr. B7	A193 Gr. B16		A193 Gr. B8M
Identification Plate	Series 300 SST			

1. Threaded and weld end valve bodies A182 F316L
2. Welded bonnet design also available.

Class	Bore	Fig. No.
150	Standard	GL01
	Full	GLL1
300	Standard	GL03
	Full	GLL3
600	Standard	GL06
	Full	GLL6
800	Standard	GL08
	Full	GLL8
1500	Standard	GL15
	Full	GLL5
1680	Standard	GL16
2500	Standard	GL25
2690	Standard	GL26

NOTE: See page 43 for flow, safety and maintenance information.

Design Specifications

Item	Applicable Specification
Wall thickness	API 602
Pressure - temperature ratings	ASME B16.34
General valve design	API 602 & B16.34
End to End dimensions	ASME B16.10
Flange design	ASME B16.5
Thread design	ASME B1.20.1
Butt Weld design	ASME B16.25
Socket Weld design	ASME B16.11
Materials	ASTM

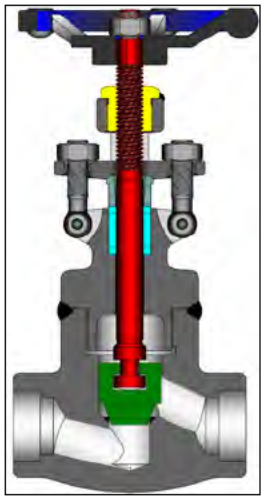

Welded Bonnet Design

DESIGN FEATURES:

- Standard trim is stellite faced seats integral to the body, 13% chrome disc, and 13% chrome stem (API trim 8). Other trims available on request.
- Wall thickness per heavy wall API 602 requirements.
- Seat faces lapped for smooth finish and superior sealing.
- Swivel disc for optimal seating and longer seat life are non-rotating.
- Stems of hand wheel operated design are rotating / rising design.
- Each valve is shell, seat and backseat pressure tested per industry standard API 598.
- Gland is two piece gland / gland flange design for optimal alignment and uniform packing compression.
- End Flanges have the following raised faces per ASME B16.5:
  Classes 150-300: 1/16" (2mm)
  Classes 600: 1/4" (7mm)
- Weld ends are available per ASME B16.25/B16.11 or per customer's specification.
- Other available options as follows:
  - » Alternate valve materials such as chrome and stainless steel alloys
  - » Alternate trim materials
  - » NACE service
  - » Special cleaning for applications such as oxygen or chlorine
  - » Other options available as specified

GLOBE VALVE DIMENSIONS CLASS 150 - 800

SIZE	ASME 150 Bolted Bonnet Standard Bore				ASME 300 Bolted Bonnet Standard Bore				ASME 600 Bolted Bonnet Standard Bore			
in	A	C	D	E	A	C	D	E	A	C	D	E
mm	FE				FE				FE			
½	4.25	6	0.39	3.9	6	6.2	0.39	3.9	6.5	6.2	0.39	3.9
13	108	153	10	100	152	158	10	100	165	158	10	100
¾	4.62	6.2	0.5	3.9	7	6.2	0.5	3.9	7.5	6.2	0.5	3.9
19	117	158	13	100	178	158	13	100	190	158	13	100
1	5	7.6	0.69	4.9	8	7.6	0.69	4.9	8.5	7.6	0.69	4.9
25	127	192	18	125	203	192	18	125	216	192	18	125
1¼	5.5	8.9	0.91	6.3	8.5	8.9	0.91	6.3	9	5	0.91	6.3
32	140	227	23	160	216	227	23	160	229	127	23	160
1½	6.5	9.4	1.12	6.3	9	9.4	1.12	6.3	9.5	9.4	1.12	6.3
38	165	240	29	160	229	240	29	160	241	240	29	160
2	8	11	1.38	7.1	10.5	11	1.38	7.1	11.5	11	1.38	7.1
50	203	279	35	180	267	279	35	180	292	279	35	180

SIZE	ASME 800 Bolted Bonnet Standard Bore				Bolted Bonnet Full Bore				Welded Bonnet Standard Bore				Welded Bonnet Full Bore			
in	A	C	D	E	A	C	D	E	A	C	D	E	A	C	D	E
mm	WE				WE				WE				WE			
¼	3.11	6.1	0.26	3.9	-	-	-	-	3.11	6.1	0.26	3.9	-	-	-	-
6	79	154	7	100	-	-	-	-	79	154	7	100	-	-	-	-
3/8	3.11	6.1	0.39	3.9	-	-	-	-	3.11	6.1	0.39	3.9	-	-	-	-
10	79	154	10	100	-	-	-	-	79	154	10	100	-	-	-	-
½	3.11	6.2	0.39	3.9	3.62	6.2	0.5	6.3	3.11	6.1	0.39	3.9	3.62	6.2	0.5	3.9
13	79	158	10	100	92	158	13	160	79	154	10	100	92	158	13	100
¾	3.62	6.2	0.5	3.9	4.37	7.6	0.69	4.9	3.62	6.2	0.5	3.9	4.37	7.6	0.69	4.9
19	92	158	13	100	111	192	18	125	92	158	13	100	111	192	18	125
1	4.37	7.6	0.69	4.9	4.72	8.9	0.91	6.3	4.37	7.6	0.69	4.9	4.72	8.9	0.91	6.3
25	111	192	18	125	120	227	23	160	111	192	18	125	120	227	23	160
1¼	4.72	8.9	0.91	6.3	5.98	9.4	1.12	6.3	4.72	8.9	0.91	6.3	5.98	9.4	1.12	6.3
32	120	227	23	160	152	240	29	160	120	227	23	160	152	240	29	160
1½	5.98	9.4	1.12	6.3	6.77	11	1.4	7.1	5.98	9.4	1.12	6.3	6.77	11	1.42	7.1
38	152	240	29	160	172	279	36	180	152	240	29	160	172	279	36	180
2	6.77	11	1.38	7.1	8.66	12.8	1.85	7.9	6.77	11	1.38	7.1	8.66	12.8	1.85	7.9
50	172	279	35	180	220	325	47	200	172	279	35	180	220	325	47	200

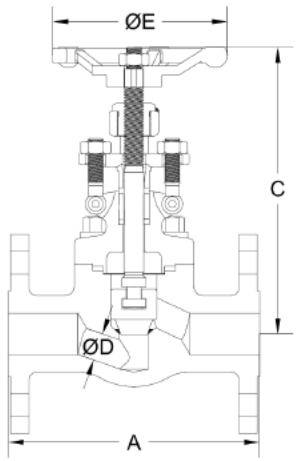

Bolted Bonnet Flanged Ends Design

WE = Socket Weld / Threaded ends
FE = Flanged Ends

C = Center to top open

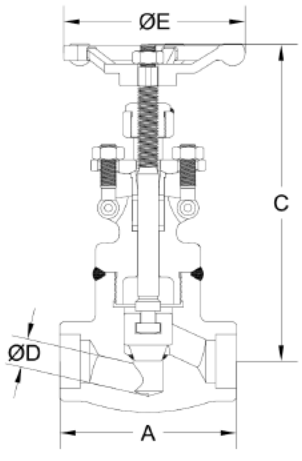

Welded Bonnet Socket Weld Ends Design

ADDITIONAL SIZES, MATERIALS AND CLASSES AVAILABLE UPON REQUEST.

GLOBE VALVE DIMENSIONS CLASS 1500 - 2680

SIZE	ASME 1500 & 1690																
	Bolted Bonnet									Welded Bonnet							
	Standard Bore					Full Bore				Standard Bore				Full Bore			
in	A		C	D	E	A	C	D	E	A	C	D	E	A	C	D	E
mm	FE	WE				WE				WE				WE			
¼	-	3.11	6.9	0.26	3.9	-	-	-	-	3.11	6.2	0.39	3.9	-	-	-	-
6	-	79	175	7	100	-	-	-	-	79	158	10	100	-	-	-	-
3/8	-	3.62	7	0.39	4.9	-	-	-	-	3.62	6.2	0.5	3.9	-	-	-	-
10	-	92	178	10	125	-	-	-	-	92	158	13	100	-	-	-	-
½	8.5	3.62	7.4	0.39	4.9	4.37	7.4	0.5	4.9	4.37	7.4	0.39	4.9	4.37	7.4	0.5	4.9
13	216	92	187	10	125	111	187	13	125	111	187	10	125	111	187	13	125
¾	9	4.37	7.4	0.5	4.9	4.72	8.9	0.69	6.3	4.37	7.4	0.5	4.9	4.72	8.9	0.69	6.3
19	229	111	187	13	125	120	227	18	160	111	187	13	125	120	227	18	160
1	10	4.72	8.9	0.69	6.3	5.98	9.5	0.91	6.3	4.72	8.9	0.69	6.3	5.98	9.5	0.91	6.3
25	254	120	227	18	160	152	242	23	160	120	227	18	160	152	242	23	160
1¼	11	5.98	9.5	0.91	6.3	6.77	10.9	1.12	7.1	5.98	9.5	0.91	6.3	6.77	10.9	1.12	7.1
32	279	152	242	23	160	172	278	29	180	152	242	23	160	172	278	29	180
1½	12	6.77	10.9	1.12	7.1	8.66	12.8	1.38	7.9	6.77	10.9	1.12	7.1	8.66	12.8	1.38	7.9
38	305	172	278	29	180	220	325	35	200	172	278	29	180	220	325	35	200
2	14.5	8.66	12.8	1.38	7.9	9.84	14	1.85	7.9	8.66	12.8	1.38	7.9	9.84	14	1.85	7.9
50	368	220	325	35	200	250	355	47	200	220	325	35	200	250	355	47	200

SIZE	ASME 2500 & 2680							
	Bolted Bonnet				Welded Bonnet			
	Standard Bore				Standard Bore			
in	A	C	D	E	A	C	D	E
mm	WE				WE			
½	5.91	11.5	0.43	6.3	5.91	9.8	0.55	6.3
13	150	293	11	160	150	249	14	160
¾	5.91	11.5	0.43	6.3	5.91	9.8	0.55	6.3
19	150	293	11	160	150	249	14	160
1	6.69	13.5	0.55	7.9	6.69	11.5	0.75	7.9
25	170	344	14	200	170	292	19	200
1¼	7.87	15.1	0.63	9.8	7.87	12.9	0.98	9.8
32	200	383	16	250	200	327	25	250
1½	7.87	15.1	0.98	9.8	7.87	12.9	1.1	9.8
38	200	383	25	250	200	327	28	250
2	9.84	17.4	1.1	11.8	9.84	15	1.38	11.8
50	250	442	28	300	250	381	35	300

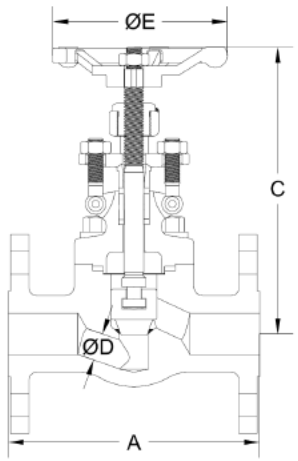

Bolted Bonnet Flanged Ends Design

WE = Socket Weld / Threaded ends
FE = Flanged Ends

C = Center to top open

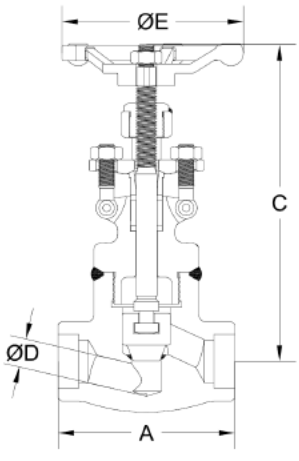

Welded Bonnet Socket Weld Ends Design

ADDITIONAL SIZES, MATERIALS AND CLASSES AVAILABLE UPON REQUEST.

API 602 GLOBE VALVES

FORGED CARBON, STAINLESS STEEL OR ALLOY STEEL
1/4" - 2" (6 - 50mm), ASME CLASSES 150 - 2680

SIZE	ASME 150			ASME 300			ASME 600			ASME 800								
	Bolted Bonnet			Bolted Bonnet			Bolted Bonnet			Bolted Bonnet						Welded Bonnet				
	Standard Bore			Standard Bore			Standard Bore			Standard Bore			Full Bore			Standard Bore			Full Bore		
in	WT	LB	CV	WT	LB	CV	WT	LB	CV	WT	LB	CV	WT	LB	CV	WT	LB	CV	WT	LB	CV
mm	FE	KG		FE	KG		FE	KG		WE	KG		WE	KG		WE	KG		WE	KG	
¼	-		-	-		-	-		-	4.6		0.7	-		-	4.4		0.7	-		-
6	-			-			-			2.1			-			2			-		
3/8	-		-	-		-	-		-	4.6		1.5	-		-	4.4		1.5	-		-
10	-			-			-			2.1			-			2			-		
½	9.9		1.5	10.6		1.5	12.3		1.5	4.4		1.5	4.9		2.6	4.2		1.5	4.6		2.6
13	4.5			4.8			5.6			2			2.2			1.9			2.1		
¾	15.2		2.7	17		2.7	17.2		2.7	4.9		2.7	8.4		4.9	4.6		2.7	8.2		4.9
19	6.9			7.7			7.8			2.2			3.8			2.1			3.7		
1	21.6		5.1	24.3		5.1	27.6		5.1	5.5		5.1	12.1		8.9	8.2		5.1	11.9		8.9
25	9.8			11			12.5			2.5			5.5			3.7			5.4		
1¼	29.8		9.1	37		9.1	37.5		9.1	12.1		9.1	15.4		13.7	11.9		9.1	15.2		13.7
32	13.5			16.8			17			5.5			7			5.4			6.9		
1½	43		14	46.5		14	51.8		14	15.4		14	25.4		21.9	15.2		14	25.1		21.9
38	19.5			21.2			23.5			7			11.5			6.9			11.4		
2	61.7		22.4	68		22.4	71.9		22.4	25.4		22.4	26.5		40	25.1		22.4	26.2		40
50	28			31			32.6			11.5			12			11.4			11.9		

SIZE	ASME 1500 & 1687												ASME 2500 & 2680					
	Bolted Bonnet						Welded Bonnet						Bolted Bonnet			Welded Bonnet		
	Standard Bore				Full Bore		Standard Bore			Full Bore			Standard Bore			Standard Bore		
in	WT	LB	WT	LB	CV	WT	LB	CV	WT	LB	CV	WT	LB	CV	WT	LB	CV	WT	LB	CV
mm	FE	KG	WE	KG		WE	KG		WE	KG		WE	KG		WE	KG		WE	KG	
¼	-		6.6		0.7	-		-	6.2		0.7	-		-	-		-	-		-
6	-		3			-			2.8			-			-			-		
3/8	-		7.7		1.5	-		-	6.6		1.5	-		-	-		-	-		-
10	-		3.5			-			3			-			-			-		
½	24.3		7.7		1.5	8.8		1.5	7.3		1.5	8.6		1.5	23.8		1.8	16.1		3
13	11		3.5			4			3.3			3.9			10.8			7.3		
¾	29.1		8.8		2.7	13.9		2.7	8.4		2.7	13.7		2.7	24.3		1.9	18.7		3.1
19	13.2		4			6.3			3.8			6.2			11			8.5		
1	38.4		13.9		5.1	17.6		5.1	13.4		5.1	17.4		5.1	26.8		3.2	27.6		6
25	17.4		6.3			8			6.1			7.9			12.1			12.5		
1¼	41.9		17.6		9.1	27.6		9.1	17.2		9.1	27.3		9.1	47.8		4.3	45.6		10.5
32	19		8			12.5			7.8			12.4			21.7			20.7		
1½	54		27.6		14	43		14	27.1		14	42.8		14	48.5		10.7	46.3		13.5
38	24.5		12.5			19.5			12.3			19.4			22			21		
2	85.5		43		22.4	44.1		22.4	42.5		22.4	43.9		22.4	81.6		14.2	79.4		22.4
50	38.8		19.5			20			19.3			19.9			37			36		

FE = Flanged Ends
WE = Socket Weld / Threaded Ends

WT = Weight
CV = Flow Coefficient

API 600 GATE VALVES
BOLTED BONNET, ASME CLASSES 150 TO 1500
CAST CARBON, STAINLESS STEEL OR ALLOY STEEL

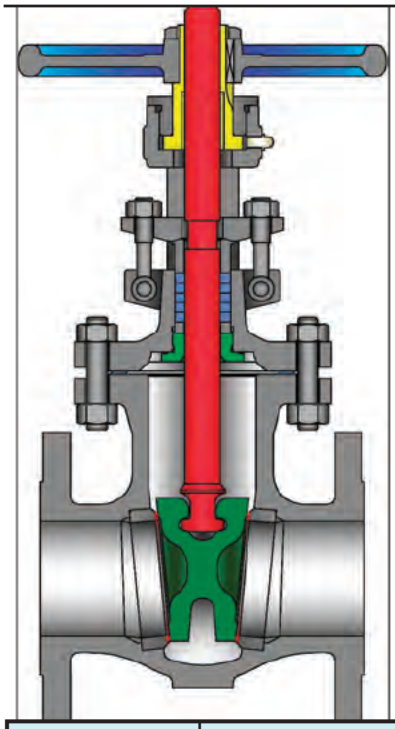

Class	Fig. No.
150	1503
300	3003
600	6003
900	9003
1500	1303

STANDARD MATERIALS (Other materials available)

PART	MATERIALS			
Body	A216 Gr. WCB (STANDARD)	A217 Gr. WC6	A217 Gr. WC9	A351 Gr. CF8M (1)
Bonnet / Yoke arm	A216 Gr. WCB	A217 Gr. WC6	A217 Gr. WC9	A351 Gr. CF8M
Wedge	A217 Gr CA15 or WCB + 13% CR Faced	WC6 + Stellite 6 Faced	WC9 + Stellite 6 Faced	A351 Gr. CF8M
Seat Ring	Carbon Steel + Stellite 6 Faced	A182 F11 + Stellite 6 Faced	A182 F22 + Stellite 6 Faced	SST 316
Stem	SST 410			SST 316
Stem Bushing	A 439 Ductile NI-Resist Gr. D2			
Stem Bushing Lock Nut	Steel			SST 316
Gland Flange	Carbon Steel			Series 300 SST
Eye Bolt	A193 Gr. B7			A193 Gr. B8
Eye Bolt Nut	A194 Gr. 2H			A194 Gr.8
Groove Pin	Steel			Series 300
Gland	SST 410			SST 316
Packing	Graphite			PTFE
Packing Washer / Packing Spacer	SST 410			SST 316
Gasket	Class 150: Corrugated SST Encapsulated w/ Graphite Class 300 to 600: Spiral Wound SST with Graphite Class 900-1500: RTJ			Class 150: PTFE Class 300-600: Spiral Wound SST with PTFE
Back Seat	SST 410			SST 316
Hand Wheel	Malleable Iron or Steel			
Hand Wheel Nut	Malleable Iron or Steel			
Key	Steel			
Lubricant Fitting	Steel			
Body / Bonnet Stud	A193 Gr. B7	A193 Gr. B16		A193 Gr. B8
Body / Bonnet Nut	A194 Gr. 2H	A194 Gr. 7		A194 Gr.8
Bearing Cap	Carbon Steel			Series 300 SST
Cap Screws	Steel			
Identification Plate	Series 300 SST			

(1) Weld end valve body A351 Gr. CF3M

NOTE: See page 52 for flow, safety and maintenance information.

DESIGN FEATURES:

- **Flexible Wedge** for improved seating and ease of operation, especially in high temperature service. Wedges are accurately guided thru the entire stroke.
- **Standard trim** is API trim 8 for carbon steel valves, API trim 5 for chrome alloy valves, and API trim 10 for CF8M (T316) valves for optimal performance under normal conditions. Other trim materials available on request.
- **Seat faces** lapped for smooth finish and superior sealing.
- **Stems** are non-rotating with surface finish to maximize packing seal for low fugitive emissions.
- **Bonnet and Yoke arms** designed for ease of gear, motor or cylinder actuator adaptation.
- **Each** valve is shell, seat and backseat pressure tested per industry standard API 598.
- **Gland** is two piece gland / gland flange design for optimal alignment and uniform packing compression.

Design Specifications

Item	Applicable Specification
Wall thickness	API 600
Pressure - temperature ratings	ASME B16.34
General valve design	API 600 & B16.34
End to End dimensions	ASME B16.10
Flange design	ASME B16.5
Butt Weld design	ASME B16.25
Materials	ASTM

- **End Flanges** have the following raised faces per ASME B16.5:
  Classes 150-300: 1/16" (2mm).
  Classes 600-1500: 1/4" (7mm).
- **Weld** ends are available per ASME B16.25 or per customer's specification.
- **Each** valve has a unique certification number that is traceable to the valve certification sheet which includes MTR data, pressure test report, inspection report and certificate of conformance.
- **Other** available options as follows:
  -Alternate valve materials such as chrome and stainless steel alloys
  -Alternate trim materials
  -Bypass, drain and other auxiliary connections
  -Gear, motor, and cylinder actuators available
  -NACE service
  -Special cleaning for applications such as oxygen or chlorine
  -Other options available as specified

GATE VALVE DIMENSIONS (CLASS 150—1500).

SIZE	ASME 150						ASME 300					ASME 600				
in	A		B(1)	C(1)	D	E	A	B(1)	C(1)	D	E	A	B(1)	C(1)	D	E
mm	FE	WE					WE/FE					WE/FE				
1	5.00	5.00	8.6	9.8	1.00	4	6.50	8.6	9.8	1.00	4	-	-	-	-	-
25	127	127	217	248	25	114	165	217	248	25	114	-	-	-	-	-
1 ½	6.50	6.50	10.7	12.4	1.50	6	7.50	10.7	12.4	1.50	6	-	-	-	-	-
40	165	165	271	314	38	152	190	271	314	38	152	-	-	-	-	-
2	7.00	8.50	12.3	14.6	2.00	7	8.50	12.3	14.6	2.00	7	11.50	13.5	15.7	2.00	8
50	178	216	313	372	51	178	216	313	372	51	178	292	342	400	51	203
2 ½	7.50	9.50	12.8	15.6	2.50	7	9.50	12.8	15.6	2.50	7	13.00	18.1	21.9	2.50	12
65	190	241	324	395	64	178	241	324	395	64	178	330	461	555	64	305
3	8.00	11.12	14.8	18.1	3.00	9	11.12	15.9	19.3	3.00	9	14.00	19.2	22.8	3.00	12
80	203	282	375	459	76	230	282	405	490	76	230	356	487	580	76	305
4	9.00	12.00	17.7	22.1	4.00	10	12.00	19.0	23.3	4.00	10	17.00	23.0	27.5	4.00	14
100	229	305	450	561	102	254	305	482	593	102	254	432	585	698	102	356
5	10.00	15.00	24.4	31.1	5.00	12	15.00	26.5	33.1	5.00	14	-	-	-	-	-
125	254	381	620	789	127	305	381	674	842	127	356	-	-	-	-	-
6	10.50	15.88	24.4	31.1	6.00	12	15.88	26.5	33.1	6.00	14	22.00	32.5	39.1	6.00	20
150	267	403	620	789	152	305	403	674	842	152	356	559	825	993	152	508
8	11.50	16.50	30.7	39.2	8.00	14	16.50	32.8	41.4	8.00	16	26.00	35.0	45.4	7.87	22
200	292	419	780	996	203	356	419	833	1051	203	406	660	890	1154	200	560
10	13.00	18.00	36.4	47.2	10.00	16	18.00	39.4	50.3	10.00	20	31.00	41.9	52.4	9.75	24
250	330	457	925	1198	254	406	457	1002	1277	254	508	787	1065	1332	248	610
12	14.00	19.75	42.7	55.6	12.00	20	19.75	44.8	57.7	12.00	20	33.00	47.3	59.9	11.75	28
300	356	502	1084	1412	305	508	502	1139	1466	305	508	838	1202	1521	298	710
14	15.00	22.50	47.5	61.5	13.25	20	30.00	49.1	63.4	13.25	22	35.00	67.4 (1)		12.87	28
350	381	572	1207	1562	337	508	762	1248	1611	337	560	889	1712		327	710
16	16.00	24.00	51.7	67.8	15.25	22	33.00	54.5	70.7	15.25	24	39.00	75.2 (1)		14.75	36
400	406	610	1313	1722	387	560	838	1384	1796	387	610	991	1910		375	915
18	17.00	26.00	58.1	76.4	17.25	24	36.00	79.2 (1)		17.00	28	43.00	81.1 (1)		16.50	36
450	432	660	1477	1940	438	610	914	2012		432	710	1092	2060		419	915
20	18.00	28.00	63.3	83.3	19.25	28	39.00	87.3 (1)		19.00	28	47.00	87.3 (1)		18.25	28
500	457	711	1615	2123	489	710	991	2217		483	710	1194	2217		464	710
24	20.00	32.00	76.7	101.1	23.25	28	45.00	102.9 (1)		23.00	36	55.00	104.3 (1)		22.00	32
600	508	813	1948	2568	591	710	1143	2614		584	915	1397	2649		559	810
30	24.00	36.00	91.9	123.0	29.25	24	55.00	130.0 (1)		29.00	24					
750	610	914	2334	3125	743	610	1397	3302		737	610					
36	28.00	40.00	107.4	143.1	34.50	24										
900	711	1016	2729	3635	876	610										
42	31.00	44.00	131.7	173.8	40.25	24										
1050	787	1118	3345	4415	1022	610										

ADDITIONAL SIZES, MATERIALS AND CLASSES AVAILABLE UPON REQUEST.

SIZE	ASME 900					ASME 1500				
in	A	B(1)	C(1)	D	E	A	B(1)	C(1)	D	E
mm	WE/FE					WE/FE				
2	14.50	15.8	18.5	1.87	10	14.50	15.8	18.5	1.87	10
50	368	402	470	48	254	368	402	470	48	254
2 ½	16.50	18.7	22.1	2.25	12	16.50	18.7	22.1	2.25	12
65	419	475	561	57	305	419	475	561	57	305
3	15.00	19.5	23.1	2.87	14	18.50	20.4	24.1	2.75	16
80	381	495	588	73	350	470	518	613	70	400
4	18.00	21.4	25.8	3.87	14	21.50	22.1	26.5	3.62	16
100	457	543	655	98	350	546	561	674	92	400
6	24.00	30.4	37.3	5.75	22	27.75	32.9	40.2	5.37	24
150	610	773	948	146	560	705	836	1021	136	610
8	29.00	34.7	43.4	7.50	24	32.75	48.0	56.5	7.00	26
200	737	882	1102	191	610	832	1219	1435	178	660
10	33.00	40.6	51.2	9.37	30	39.00	57.8	68.2	8.75	30
250	838	1030	1300	238	762	991	1467	1734	224	762

(1) Gear operators standard for 18” and up class 300 and 14” and up class 600. Height is to top of actuator.

WE = Butt weld ends
FE = Flanged ends

B = Center to top closed
C = Center to top open

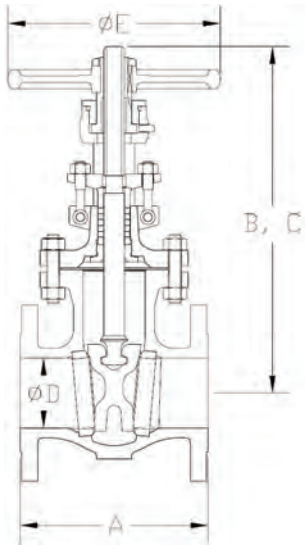

API 600 GATE VALVES
BOLTED BONNET, ASME CLASSES 150 TO 1500
CAST CARBON, STAINLESS STEEL OR ALLOY STEEL

SIZE	ASME 150							ASME 300							ASME 600						
in / mm	F	in / mm	WT FE	lb kg	WT WE	lb kg	C_v	F	in / mm	WT FE	lb kg	WT WE	lb kg	C_v	F	in / mm	WT FE	lb kg	WT WE	lb kg	C_v
1	12.0		14		12		90	12.0		19		15		90	-		-		-		-
25	305		6		5			305		9		7			-		-		-		-
1 ½	15.5		25		22		190	15.5		34		25		190	-		-		-		-
40	390		11		10			390		15		11			-		-		-		-
2	19.0		35		33		240	19.0		42		33		240	20.0		77		57		240
50	475		16		15			475		19		15			505		35		26		
2 ½	19.5		49		44		390	19.5		55		44		390	26.0		148		126		390
65	500		22		20			500		25		20			655		67		57		
3	22.0		72		62		560	24.0		112		73		560	28.0		174		143		560
80	565		33		28			610		51		33			710		79		65		
4	26.5		112		97		1000	29.0		176		135		1000	33.5		315		251		1000
100	675		51		44			735		80		61			850		143		114		
5	36.0		142		-		1600	39.0		225		-		1600	-		-		-		-
125	915		64		-			990		102		-			-		-		-		-
6	36.0		203		190		2400	39.0		346		273		2400	46.5		677		573		2400
150	915		92		86			990		157		124			1185		307		260		
8	45.5		320		287		4500	48.5		540		430		4500	54.5		1096		942		4300
200	1155		145		130			1230		245		195			1380		497		427		
10	53.0		507		465		7000	58.5		838		692		7000	62.0		1574		1334		6700
250	1350		230		211			1480		380		314			1580		714		605		
12	63.0		721		662		10000	67.0		1162		955		10000	71.0		2000		1702		10000
300	1600		327		300			1705		527		433			1805		907		772		
14	70.5		988		966		13000	74.0		1555		1277		13000	76.0		2761		2373		12000
350	1795		448		438			1875		705		579			1935		1252		1076		
16	78.0		1191		1111		17000	82.0		1949		1663		17000	85.0		3616		3098		16000
400	1985		540		504			2080		884		754			2150		1640		1405		
18	85.0		1433		1299		23000	89.5		3790		2196		22000	91.5		4507		3861		21000
450	2150		650		589			2270		1720		996			2325		2044		1751		
20	95.0		1744		1678		28000	98.0		4230		2745		27000	100.0		4507		4279		25000
500	2415		791		761			2505		1918		1245			2520		2044		1941		
24	112 5		2580		2481		41000	116.0		6850		4500		40000	116.5		7949		7621		37000
600	2860		1170		1125			2945		3100		2040			2960		3605		3457		
30	133 5		5510		*		65000	132 5		7932		*		64000							
750	3395		2500		*			3365		3600		*									
36	155 5		7453		*		90000														
900	3950		3380		*																
42	192.0		11687		*		120000														
1050	4875		5300		*																

(*) Weld ends are available on request.

SIZE	ASME 900							ASME 1500						
in / mm	F	in / mm	WT FE	lb kg	WT WE	lb kg	C_v	F	in / mm	WT FE	lb kg	WT WE	lb kg	C_v
2	23.5		176		141		210	23.5		176		141		210
50	595		80		64			595		80		64		
2 ½	29.0		210		176		310	29.5		386		316		310
65	735		95		80			745		175		143		
3	29.0		210		176		510	29.5		387		316		470
80	735		95		80			745		175		143		
4	32.5		324		239		950	33.0		536		446		830
100	825		147		108			830		243		202		
6	46.0		794		644		2200	49.0		1365		1230		2000
150	1170		360		292			1235		619		558		
8	53.5		1320		1100		3900	57.0		2500		2200		3400
200	1355		599		499			1455		1134		998		
10	63.5		2340		2190		6200	69.0		5200		5000		5400
250	1615		1061		993			1745		2267		2313		

FE = Flanged Ends
WE = Weld Ends

WT = Weight
F = Dismantling Dimension
C_V = Flow Coefficient

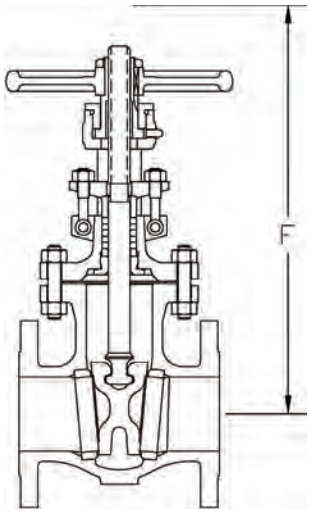

POWELL VALVES

HANDBOOK
Of
VALVE
INFORMATION

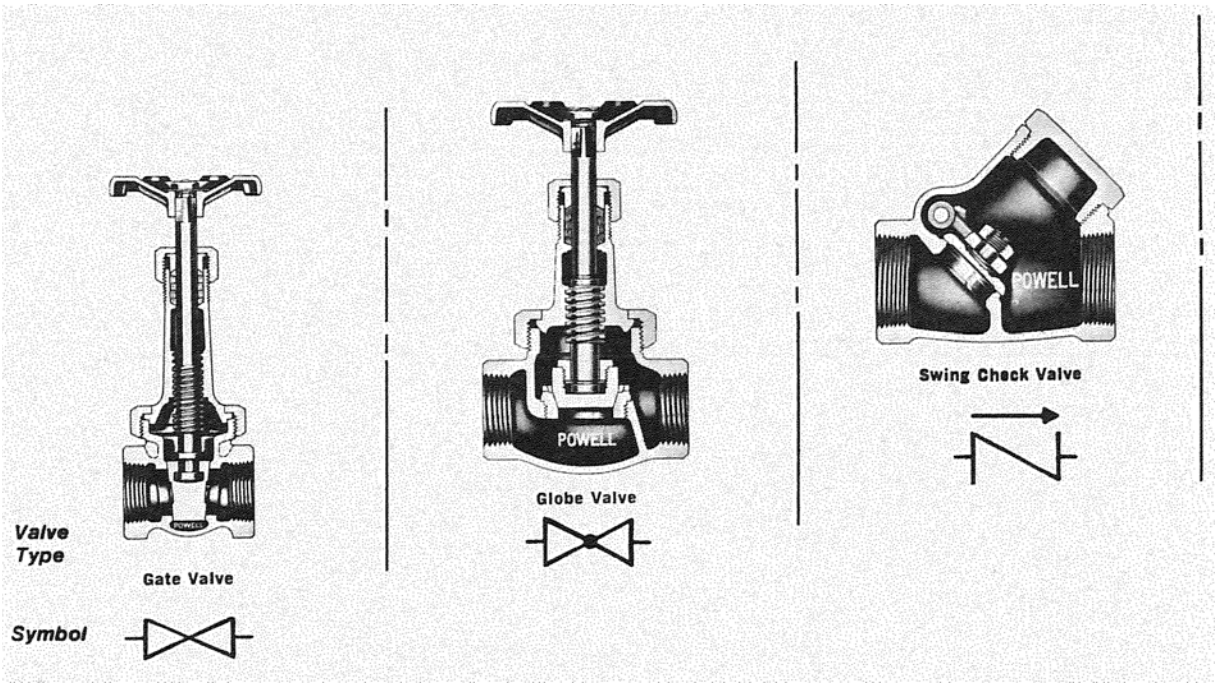

The Wm. Powell Company
Dependable Valves Since 1846
2503 Spring Grove Avenue, Cincinnati, Ohio 45214-1771, U.S.A.
Phone 513-852-2000 • Fax No. 513-852-2997

HANDBOOK OF VALVE INFORMATION

Of all the great variety of mechanical and engineering equipment used in Industry today, none is more important than or as essential as the Valve. For whatever fluids – steam, water, oil, gas, air, acids, chemicals, etc. – are conveyed through pipes to set wheels and processes in motion, there must be valves to control their flow.

Therefore, to ensure the most satisfactory performance and longest valve life with the least amount of maintenance, it is vitally important to know –

- What type of valve to specify and install – whether a gate, globe, angle, check, ball, or butterfly valve, etc.
- Of what material it should be made to meet the specific requirements of the service in which it is to be used.
- What type of seat and disc is best to use.
- Of what material the disc should be made.
- Which bonnet construction will be most desirable – Integral, Screwed, Union, Bolted or Pressure Seal Design.
- Should it have a Rising Stem or Non-Rising Stem.
- Should it have an Inside Screw or Outside Screw and Yoke.
- Should it have Threaded, Flanged, Solder, Silver Braze, or Welding Ends.

That valve users may become better acquainted with these important factors concerning valve design, construction, application and care, and to help select the right valve as well as install and repair it, is the purpose of this booklet.

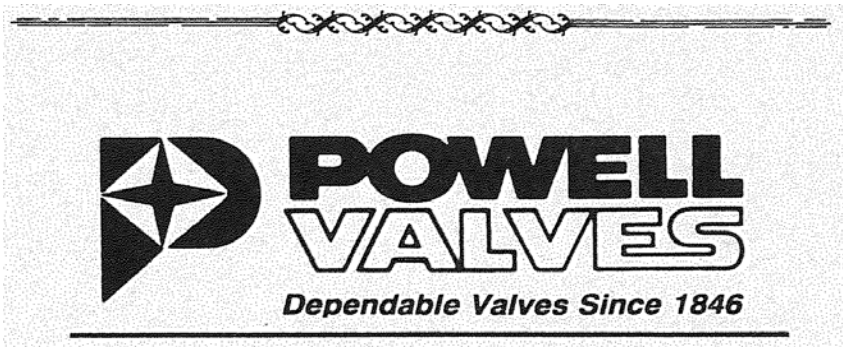

MATERIALS of CONSTRUCTION

Powell Valves are available in Bronze, Iron, Cast Steel and Corrosion-Resisting Metals and Alloys.

Standards and specifications prescribe the rules and regulations for the construction of boilers and pressure vessels, including valves and safety appliances, specifications for materials, dimensional standards and requirements for piping systems. Powell Valves and Engineering Specialties, wherever applicable, conform to the requirements set forth in the publications (latest editions) of the following associations: API-American Petroleum Institute (Standards), ANSI-American National Standards Institute (Codes and Standards), ASME-American Society of Mechanical Engineers (Boiler Construction and Unfired Pressure Vessel Code), ASTM-American Society for Testing Materials (Material Specifications), MSS-Manufacturers' Standardization Society of the Valve and Fittings Industry (Standard Practices).

BRONZES

Powell Bronze Valves are designed, manufactured and tested in accordance with MSS SP-80 Standard. End flanges are faced and drilled and in accordance with ASME B16.24.

CAST IRON

Cast Iron Valves are in accordance with MSS SP-70 (Gate Valves), SP-85 (Globe and Angle Valves), and SP-71 (Check Valves). Pressure/Temperature limits are also given in these standards. End Flanges are faced and drilled in accordance with ASME B16.1. Face to Face dimensions of flanged end valves conform to ASME B16.10.

LOW CARBON STEEL & LOW ALLOY STEEL

These valves are in accordance with ASME B16.34. The pressure and temperature limitations are per ASME B16.34 based on material and pressure class. End flanges are furnished faced and drilled and have dimensions equal to those given in ASME B16.5. Face to face dimensions of flanged end valves and end to end dimensions of weld end valves are in accordance with ASME B16.10.

STAINLESS STEELS

Valves are made in CF3, CF8, CF3M or CF8M and conform to ASME B16.34 requirement. Pressure/Temperature ratings are per B16.34. Face to Face and End to End dimensions are per ASME B16.10. End Flanges are in accordance with ASME B16.5. Flat Face valves are available on special orders.

SPECIAL ALLOYS and PURE METALS

In this classification are included Monel*, Nickel, Hastelloy+ Alloys B and C, Alloy 20 and others. The pressure and temperature limitations of these metals are given in ASME B16.34, or are determined by the requirements and allowable stress limits given in the appropriate codes and standards.

VALVE TRIM

Valve Trim is comprised of the following:
Gate-Globe-Angle Valves—Stem, Body or Seat Ring Seating Surfaces, Disc or Wedge Seating Surfaces, Backseat Bushing or a deposited weld for the Backseat.
Swing Check Valves—Body or Seat Ring Seating Surface, Disc Seating Surface, Carrier Pin, Disc Nut, Disc Nut Pin and Pin Plug when furnished.
Lift Check Valves—Body or Seat Ring Seating Surface, Disc Seating Surface and Disc Guide.

*TM – International Nickel Co., Inc. + TM – Union Carbide Corporation.

ABBREVIATIONS FOR COMMON VALVE TERMINOLOGY

W.O.G. . . . . Water Oil Gas
C.W.P. . . . . Cold Working Pressure
W.S.P. . . . . Working Steam Pressure
LPG . . . . . Liquefied Petroleum Gas
T.E. . . . . Threaded End
F.E. . . . . Flanged End
B.W.E. . . . . Butt Welding End
S.W.E . . . . . Socket Welding End
S. J. . . . . Solder Joint
S.B. . . . . Silver Braze
S.I.B . . . . . Screwed Bonnet
U.B. . . . . Union Bonnet
B.B. . . . . Bolted Bonnet
O.S.Y. . . . . Outside Screw and Yoke
I.S.R.S. . . . . Inside Screw and Yoke
I.S.N.R.S. . . . . Inside Screw Non-Rising Stem
N.R.S. . . . . Non-Rising Stem
R.S. . . . . Rising Stem
S.W. . . . . Solid Wedge
D.W. . . . . Double Wedge
D.D. . . . . Double Disc
T.D. . . . . Teflon Disc
F.F. . . . . Flat Face
R.F. . . . . Raised Face
L.M.F. . . . . Large Male and Female
S.M.F. . . . . Small Male and Female
L.F. . . . . Large Female
S.F. . . . . Small Female
L.M. . . . . Large Male
S.M. . . . . Small Male
L.T.G. . . . . Large Tongue Groove
S.T.G. . . . . Small Tongue Groove
L.T. . . . . Large Tongue
S.T. . . . . Small Tongue
L.G. . . . . Large Groove
S.G. . . . . Small Groove
R.T.J. . . . . Ring Joint
Int. S. . . . . Integral Seat
Ren. S. . . . . Renewable Seat
I.P.S. . . . . Iron Pipe Size
P.S.I. . . . . Pounds per Square Inch

VALVE SELECTION AND INSTALLATION HINTS

FIRST CONSIDERATIONS

The first important consideration when specifying valves is to select the RIGHT Valve. Long life, satisfactory performance and low maintenance depend upon **Fitting the Valve to the Job.**

Whether or not a valve is suitable for a particular job is determined by its design and the materials of which it is made, both of which are discussed on following pages.

To be sure of selecting the right valve and of obtaining the best results, it is necessary to know the kind of media and the amount of flow to be handled, the pressure, temperature, nature of service, the physical conditions at points where valves are to be installed and the frequency of operation.

Proper safety procedures and precautions must be followed during valve installation, maintenance, and use as appropriate for the application and service conditions. The following minimum precautions shall be taken as appropriate.

- Proper lock-out procedures.
- Proper removal of pressure from valve prior to servicing.
- Proper removal of all toxic media from work area or following proper procedures for handling such media.
- Use of any necessary protective clothing such as eye and ear protection.
- Excess force or heat shall not be used during maintenance or servicing operations.
- Most Powell Valves feature a machined backseat area on stem and bonnet (or backseat bushing) which may seal the packing area from the valve pressure. However, this cannot be guaranteed, and, therefore, Powell does not recommend replacing valve packing while under pressure
- All valves shall be operated within the appropriate pressure/temperature limits for the design and materials of construction.

CARE OF VALVES BEFORE INSTALLATION

When valves are to be stored before installation, keep them dry wrapped and protected as shipped from the manufacturer. If they are unprotected and left exposed, sand or other gritty matter may get into the working parts and, if not thoroughly cleaned out, will cause trouble later on. Also, store valves so they cannot fall and where other heavy material cannot fall upon them. Great care should always be exercised in handling valves.

Before installation the inside of the valves should be blown out with compressed air or flushed with water to remove all dirt and grit. Piping should be cleaned out in the same manner, or it should be swabbed to remove dirt or metal chips left from threading operations or welding on the pipe.

Paint, grease or joint sealing compound should be applied only to the pipe (male) threads – NOT on the threads in the valve body. This reduces the chances of the paint, grease or compound getting on the seat or other inner working parts of the valve to cause future trouble.

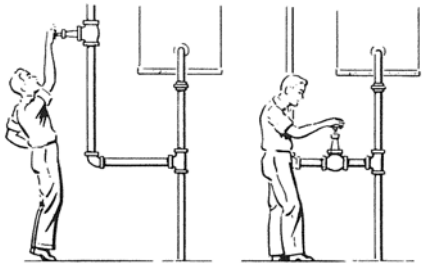

Locate valves so they can be easily reached.

VALVE MATERIALS

Choosing the right metal means good service. Bronze valves are suitable for steam pressure of 125 psi at 406 F., 150 psi at 406 F., 200 psi at 550 F., 300 psi at 550 F., and 350 psi at 550 F., for classes 125, 150, 200, 300, and 350, respectively. Iron valves are suitable for steam pressures at 125 psi and 250 psi at 450 F. for classes 125 and 250 respectively. For higher pressures and temperatures, Steel valves should be used. In processes where highly corrosive and erosive media are encountered, only valves made of pure metals and special alloys such as Powell Valves for Corrosion Resistance should be considered. If there is any doubt as to what materials to use consult our engineers.

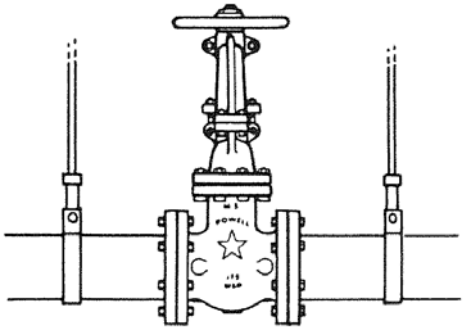

It's good practice to support the line on each side of the valve.

Keep pipe strains off of the valves – don't let the valves carry the weight of the line, thermal strains, or other pipe loads. This may result in inefficient operation, jamming and early maintenance. It also makes it difficult to tighten the flanges properly. Piping should be suspended from hangers placed on each side of the valve to take up the weight. Large heavy valves should be independently suspended.

When installing rising stem valves, be sure to allow sufficient clearance to remove the stem and bonnet if necessary. Insufficient clearance prevents valves from being fully opened and results in excessive pressure drop, gate wedge erosion, chatter, wire drawing or seat wear.

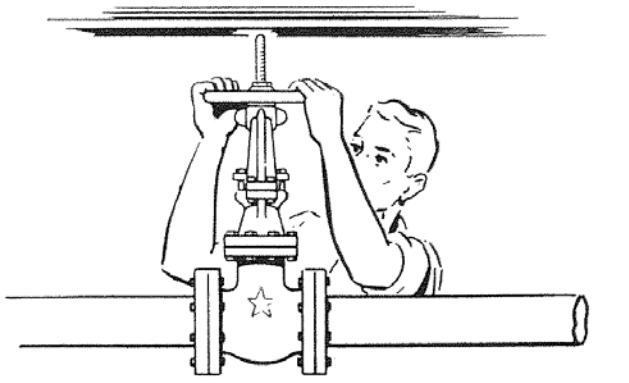

Plenty of clearance must be provided so rising stem valves can be fully opened.

Whenever possible, it is always better to install valves with the stem upright, but they can be mounted in the line with the stem at an angle. However, when installed with the stem in a downward position, the bonnet is under the line of flow forming a pocket to catch and hold any foreign matter that will eventually cut and ruin the stem or threads.

VALVE SELECTION AND INSTALLATION HINTS (Cont.)

PIPE THREADS

Avoid under size threads on the pipe. If the threaded section of the pipe is too small, the pipe, when screwed into the valve to make a tight connection, may strike the diaphragm and distort it so that the disc or wedge will not seat perfectly. Under size threads on the pipe also may make it impossible to get a tight joint. Safe practice is to cut threads to standard dimensions and standard tolerances. All pipe threads in the valve bodies are gauged to standard tolerances

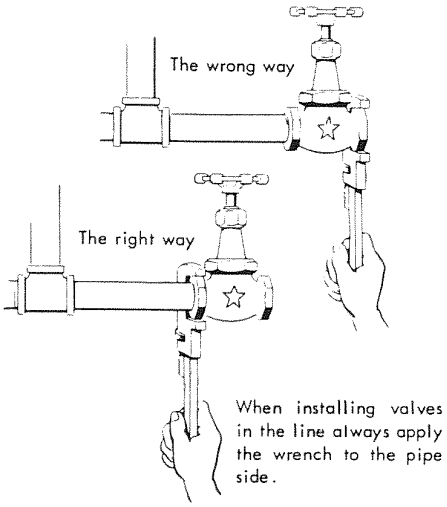

When installing threaded end valves always use the proper size wrenches with flat jaws (not pipe wrenches). By so doing there is less likelihood of the valve being distorted or damaged. Also the wrench should be used on the pipe side of the valve to minimize the chances of distorting the valve body. This is important where the valve is made of a malleable material, such as bronze. As a further precaution against distortion, see that the valve is closed tightly before it is installed.

FLANGED END VALVES
HOW TO TIGHTEN FLANGE BOLTS

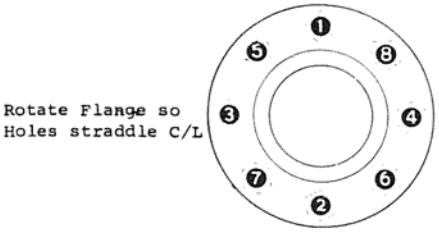

On flanged valves and fittings the flange bolts should be tightened by pulling down the nuts diametrically opposite each other and in the order as numbered (see illustration). All bolts should be pulled down gradually to a uniform tightness. Uniform stress across the entire cross section of the flange eliminates a leaky gasket.

(See ASME B16.1 and B16.5 for information on flange selection and limitations).

HOW TO AVOID WATER HAMMER OR SHOCK

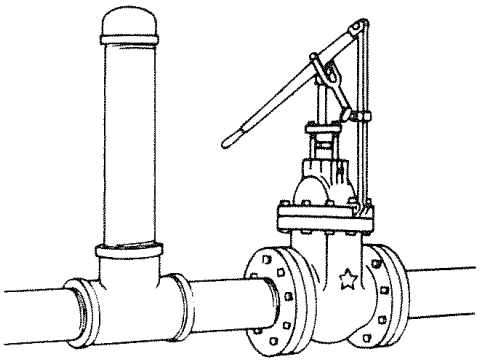

A capped standpipe installed in the line in front of the valve eliminates water hammer.

Where quick opening or closing valves are installed on liquid lines, severe water hammer or shock may result when the valve is opened or closed quickly. The resulting sudden back lash or surge of pressure causes excessive shock loading and vibration in the line. Usually a vertical capped standpipe, a few feet long and located not too far from the valve, will tend to absorb the surge.

RELIEVING PIPE STRESSES

Long runs of rigidly supported piping carrying high temperature fluids should be joined with an expansion joint having sufficient traverse to more than take up the expansion of the length of pipe involved. This kind of installation protects valves and fittings.

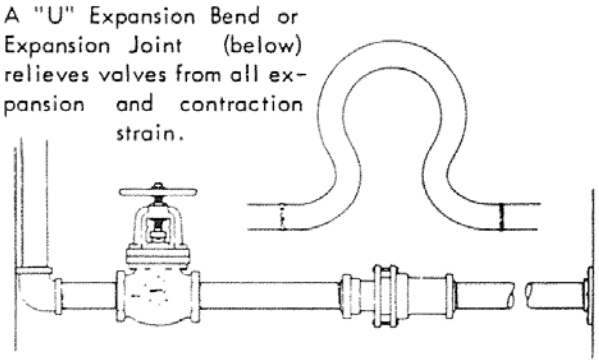

Frequently, on large size high-pressure high-temperature stream lines or lines carrying hazardous media, a “U” Bend welded in the line serves the same purpose.

BASIC TYPES of VALVES

GATE VALVES

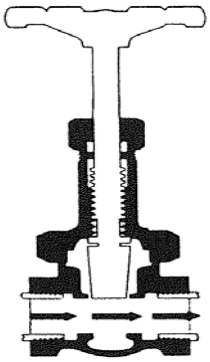

The gate valve is the type of valve most often used in industrial piping. The significant feature of the gate valve is less obstruction to flow, with less turbulence within the valve and very little pressure drop. When the valve is wide open, the wedge is lifted entirely out of the waterway, providing a straightway flow area through the valve. The gate valve should be specified with pressure drop is to be avoided. Also, gate valves should never be used for throttling purposes; only in the fully open or closed positions. If kept in an intermediate or partially open position, the bottom of the wedge and the seat will become badly eroded in a short time. Also, the wedge will tend to chatter and cause noise in the line.

GLOBE and ANGLE VALVES

The globe valve is used principally in throttling service to control the flow to any desired degree. Advantages of globe valves are efficient throttling, with minimum wire drawing or disc and seat erosion. As the valve seat is parallel to the line of flow, globe valves are not recommended where resistance to flow and pressure drop are unwanted, because the design of the valve body changes the direction of flow and causes turbulence, and pressure drop within the valve. The shorter disc travel and the fewer turns to open and close this valve save time and wear on the valve stem and bonnet. In most globe and angle valves, seat and disc can be repaired without removing the valve from the line. The angle valve, like the globe valve is used for throttling service. The flow on the inlet side of the valve is at right angle to the flow on the outlet side, making a 90º change in direction. Angle valves eliminate the use of elbows and extra fittings.

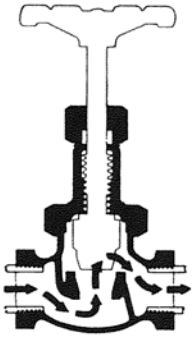

GLOBE

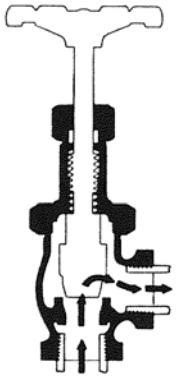

ANGLE

LIFT and SWING CHECK VALVES

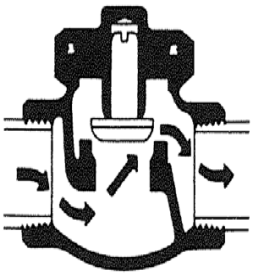

HORIZONTAL LIFT CHECK

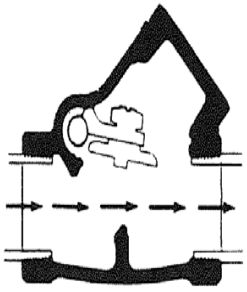

SWING CHECK

The swing check, companion for the gate valve, works automatically. When the disc is wide open, a flow area with the least amount of obstruction is provided. Turbulence and pressure drop within the valve are very low. These valves may be installed in a horizontal line with flow under the disc, or vertical line with flow upward under the disc. When the flow reverses, the back pressure and weight of the disc closes the disc against the seat stopping all backflow.

The horizontal lift check, companion for the globe valve, works automatically. These valves are to be installed in a horizontal line only with flow under the disc.

The vertical lift check is also designed for working automatically. These valves are to be installed in a vertical line only with flow upward under the disc.

BASIC TYPES of VALVES

NON-RETURN STOP and BOILER CHECK VALVES

Non-Return Stop and Boiler Check Valves are a safe-guard in steam power plants where more than one boiler is connected to the same header. They must be installed between the boiler and steam main or header and should be attached directly to or adjacent to the nozzle outlet of the boiler. This prevents back flow of steam from the main or header into the boiler, and also prevents steam entering or backing into a cold boiler. Pressure must be under the disc, with the valve stem in a vertical or upright position.

The valve will instantly close in case of tube rupture or other accident, cutting out the particular boiler to which it is attached when the pressure within that boiler drops below the pressure in the header. Likewise it opens when the boiler to which it is attached reaches the full pressure in the steam main. Proper selection of valve size is important for proper operation and to prevent excessive noise, vibration and wear.

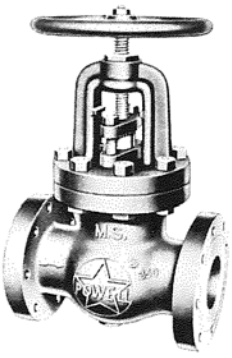

GLOBE

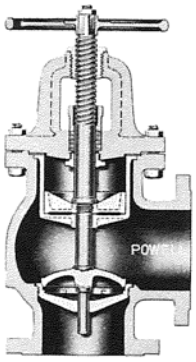

ANGLE

VALVE BONNET DESIGNS

THREADED BONNET

There are two types: (screw-in bonnet) where the outside of the base of the bonnet and the inside of the neck of the body are threaded; and the other (screwed-on bonnet) where the inside of the base of the bonnet and the outside of the neck of the body are threaded. The bonnet is attached to the body by screwing it into or onto the body neck. This is the simplest and therefore the most inexpensive type to make and is generally used in low pressure services. However, the operation of screwing the bonnet firmly to the body neck to make a tight seal tends to distort the neck or bonnet. It is therefore more difficult to make a tight seal again after the valve has been taken apart for reconditioning.

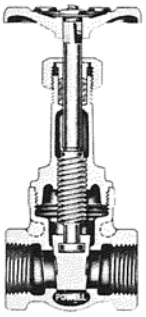



UNION BONNET

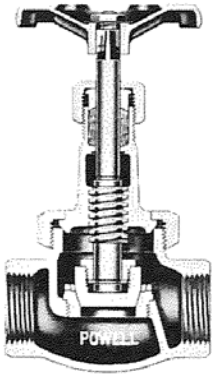

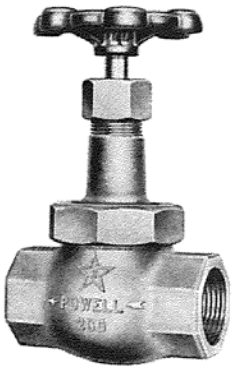

This design provides a quick, easy method of coupling and uncoupling the bonnet and valve body, and is therefore especially favored where the use of soft metal or composition discs requires periodic uncoupling of the bonnet to make replacements. The union bonnet provides a tight closure with a minimum of effort. The bonnet is provided with a bevel which engages against a corresponding bevel in the body neck. The heavy ring nut can be readily wrenched down to provide an absolutely tight seal. And, as all parts are in compression and firmly held in place, distortion is unlikely and the bonnet can be detached and tightly sealed in place again any number of times.

VALVE BONNET DESIGNS (Cont.)

BOLTED FLANGED BONNET • OUTSIDE SCREW RISING STEM

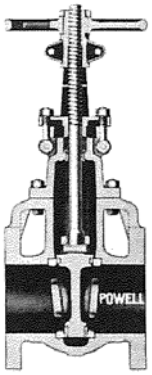

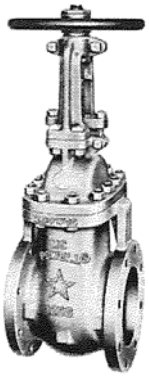

The bonnet and body neck flanges are bolted together. These valves are usually referred to as "O.S. & Y." meaning Outside Screw Rising Stem and Yoke. The stem is threaded on the outside of the valve and does not come in contact with the media, thus eliminating possible erosion or corrosion of the stem threads. These parts may be easily lubricated to insure longer life.

Flat Faced Joint
This type of connection is generally used in low pressure service only

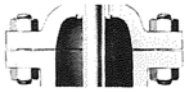

Male and Female Joint
This type of connection is recommended for high pressure, high temperature installations. It also assures alignment of bonnet to body.

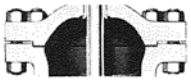

Tongue and Grooved Joint
This type of connection is recommended for high pressure, high temperature installations. It also ensure alignment of bonnet to body and eliminates all possibility of the gasket blowing out

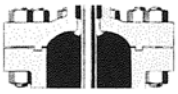

INSIDE SCREW NON-RISING STEM • BOLTED FLANGED BONNET

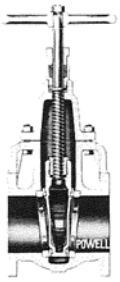

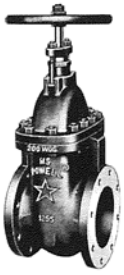

The bonnet and body neck flanges are bolted together. This type of stem design is generally used in gate valves. The stem rotates and threads into a disc holder that is threaded into the disc. The stem does not rise but merely turns with the handwheel. Non-rising stem valves are ideally suited where headroom is limited.

PRESSURE SEAL BONNET

Powell Pressure Seal Valves are intended for high pressure, high temperature services. This design enables the valve to be easily assembled and disassembled. The segmental thrust rings absorb internal valve pressure. A hardened stainless steel protective ring prevents deformation of the top surface of the soft metallic gasket. The gasket may be removed without damaging the sealing surface of the body. The gasket seating surface in the body may be lapped, if required.

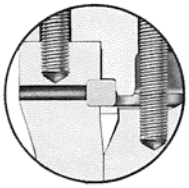

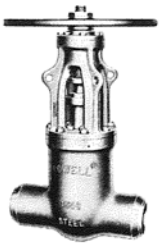

WEDGES for GATE VALVES

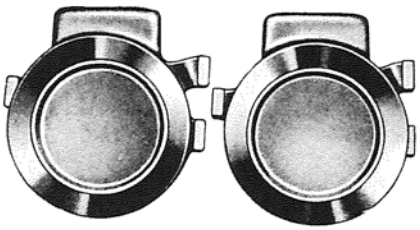

View showing seating faces of split wedge

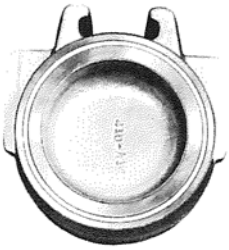

Gate Valve Wedge with Non-Metallic Insert

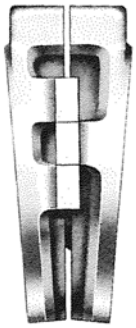

End view of split wedge

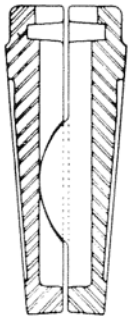

Sectional view of split wedge

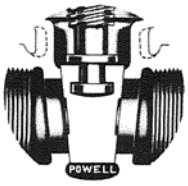

View Showing Solid Wedge

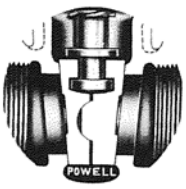

View Showing Double Wedge



End view of flexible wedge

Solid Wedges are of one-piece construction solid web type. The seating surfaces are precision machined and carefully fitted in the valve so a full seating contact is made between the wedge and seats.

Split Wedges are of ball and socket design which are adjusting and self aligning to both seating surfaces. The split wedges are especially suited for air, gas and light oil service.

Flexible Wedges are of one-piece construction. The wedge, instead of being made completely solid with both seating surfaces rigid, is flexible. Heat expansion and contraction problems are minimized as the flexible wedge is able to compensate for this and remain easy to open. The wedge also has full seating surfaces on both the inlet and outlet seating surfaces.

CAST STEEL GATE and GLOBE SEAT RINGS

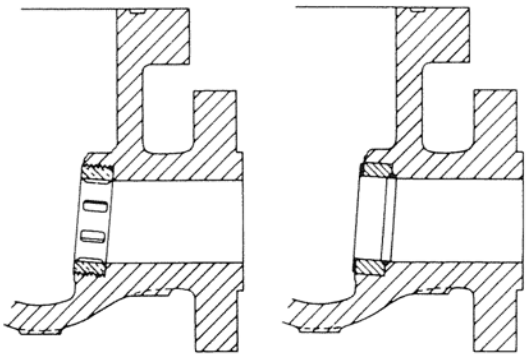

Sectional View Threaded-In Seat Ring in Gate Valve

Sectional View Welded-In Seat Ring in Gate Valve

Steel gate valve seat rings are of heavy rectangular section. They seat directly against the main wall of the body casting. Seat rings are stellite faced machined to a close fit, fit in the valve body and seal welded ensuring a positive seal of the ring in the valve body.

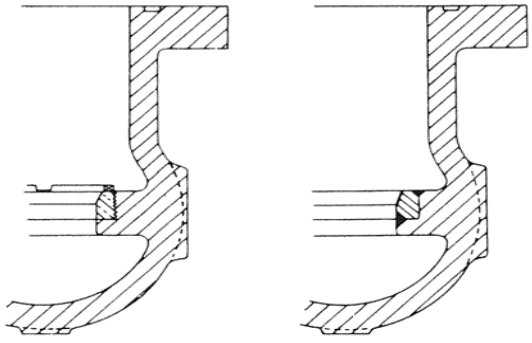

Sectional View Threaded-In Seat Ring in Globe Valve

Sectional View Welded-In Seat Ring in Globe Valve

Steel globe valves are generally supplied with swivel discs. Seat rings are stellite faced, and are slip fit and seal welded or threaded and seal welded.

GLOBE ANGLE "Y" DISCS and SEATS

Globe, Angle, and "Y" Valves are regularly supplied with integral seats and plug type discs.
Valves with other type seats and discs are available on special order.

INTEGRAL SEAT

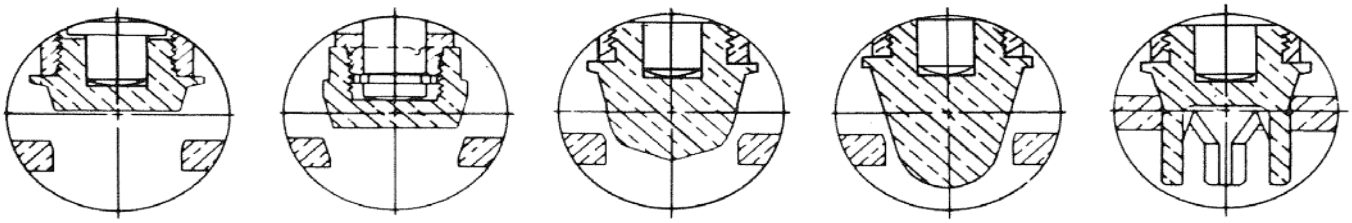

RENEWABLE SEAT

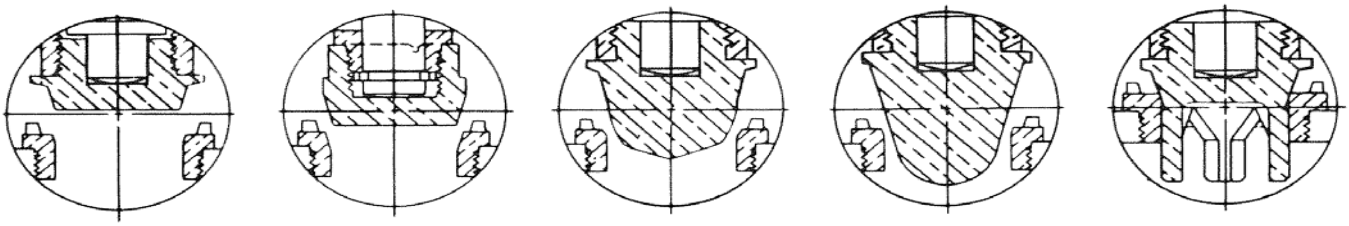

PLUG

For On-Off Service

SEMI-CONE PLUG

For fine non-characteristic flow regulation.

EQUAL PERCENTAGE PLUG

For equal percentage flow characteristic for pre-determined valve performance. Equal increments of valve lift give equal percentage increases in flow.

LINEAR FLOW PLUG

For linear flow characteristic regulation with high pressure drops.

"V" PORT PLUG

For linear flow characteristic regulation with medium and low pressure drops.

INTEGRAL SEAT

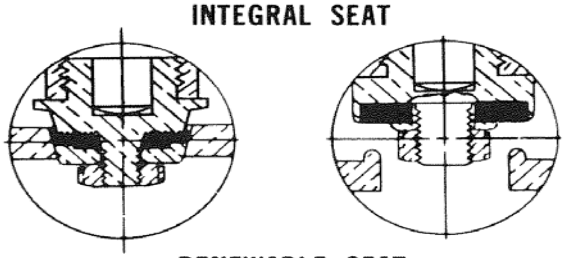

RENEWABLE SEAT

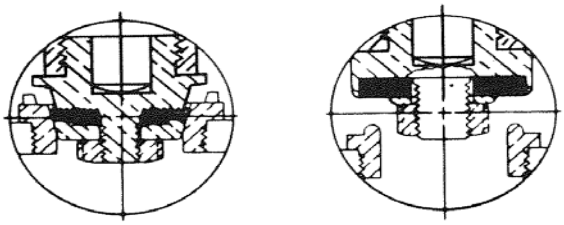

HI-LO PLUG TYPE COMPOSITION DISC

For tight shut-off with non-metallic plug disc insert (high & low pressures).

LO-PRESSURE COMPOSITION DISC

For on-off service and tight shut-off. Non-metallic disc. Low pressure service.

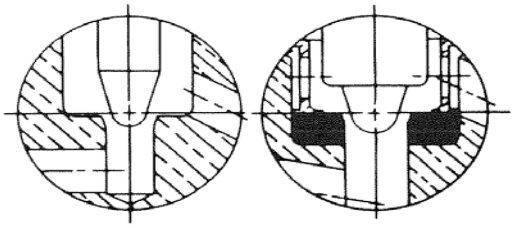

NEEDLE PLUG (Instrumentation)

High pressure drop and low flow metering. Reduced orifice.

NEEDLE PLUG (Instrumentation)

Non-metallic seat. High pressure drop and low flow metering. Reduced orifice.

NOTE: (1) Metal plugs & seats can be supplied with hard face seating surfaces.

(2) Non-metallic discs can be supplied in Teflon, Kel-F, Neoprene, etc.

(3) When ordering valves with Teflon discs, suffix T.D. must be added.

CHECK VALVES:

Lift and Swing Check Valves can be furnished with integral or renewable seats and metal or composition discs.

PIPE ENDS or CONNECTIONS of VALVES

THREADED ENDS



Threaded Ends, as the phrase suggests, are tapped with female threads into which the pipe is threaded (American Standard Pipe Threads ASME B1.20.1). Threaded End Valves are the least expensive, as less material and less finishing are required. Also, they can be more quickly and easily installed in the line. However, unless a number of extra fittings – such as unions, etc. – are used, it is difficult to remove them without dismantling a considerable portion of the piping.

FLANGED ENDS

(SEE ASME B16.1 and B16.5 FOR FLANGE SELECTION and LIMITATION INFORMATION)

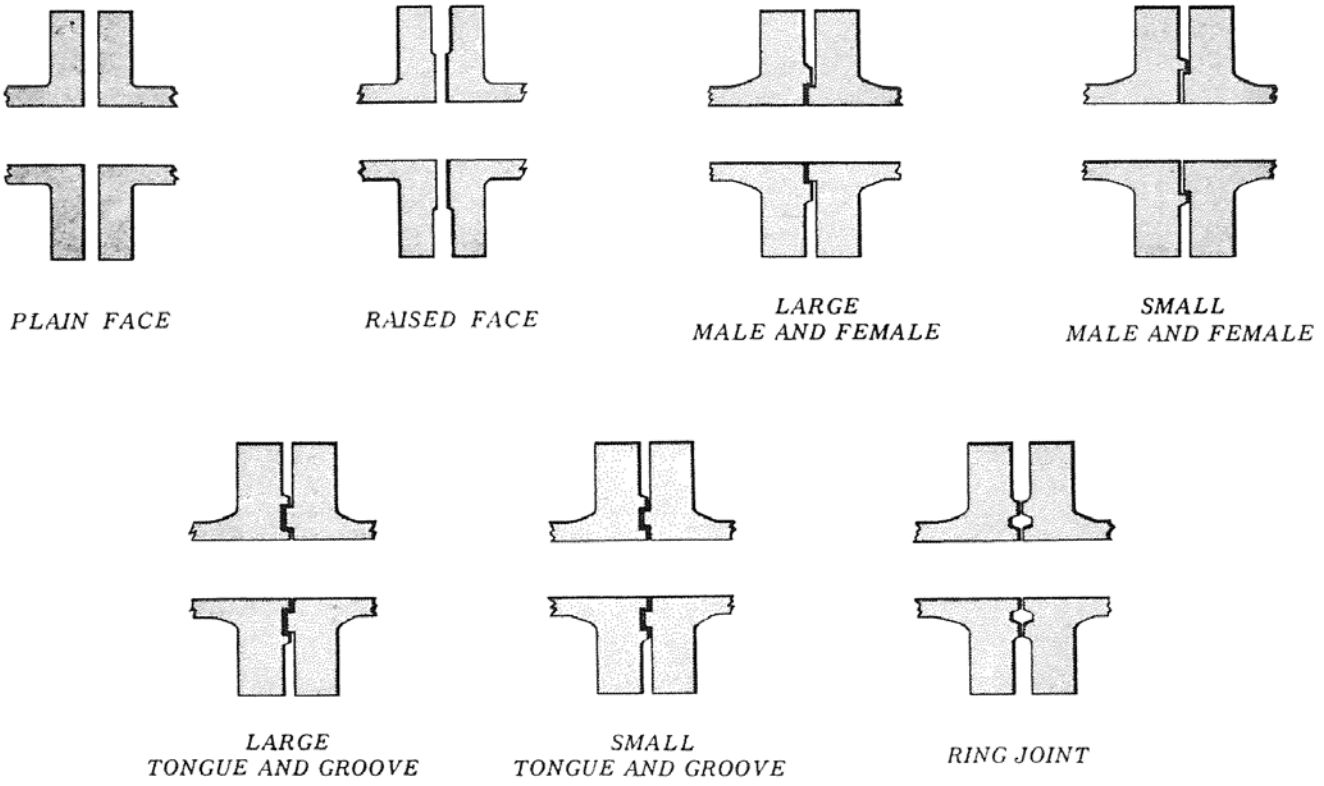

Flanged Ends make a stronger, tighter, and more leak-proof connection. Where heavy viscous media are to be controlled, as in Refineries, Process and Chemical Plants, etc., flanged end valves should be recommended. They are higher in initial cost, not only because of more metal but the flanges must be carefully and accurately machined. Also, the installation cost is greater, because companion flanges, to which the valve end flanges are bolted, as well as gaskets, bolts and nuts must be provided. All flat faces are commonly termed plain faces. Bronze and iron flat faces shall have a machined finish. Cast iron raised faces may be smooth finished or have a serrated finish which may be spiral or concentric in accordance with MSS SP-6. Steel flat faces and raised faces shall have a spiral or concentric serrated finish also in accordance with MSS SP-6. Steel male and female and tongue and grooved faces shall have a smooth finish. When ordering tongue and grooved facings, specify whether the facing should be tongue only, or grooved, etc. The steel ring joint faces shall have smooth finished grooves. If spiral wound gaskets are used on flange faces, the flanges should have a smooth finish.

PIPE ENDS or CONNECTIONS of VALVES

PROCEDURE FOR SOLDERING OR SILVER BRAZING
(PIPE OR TUBING TO VALVES)

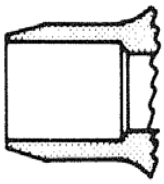

Solder End

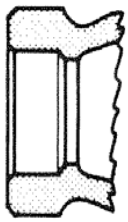

Silver Brazing End

1. Cut tube end square, making sure the diameter is not undersize or out of round. Remove all burrs.
2. Clean pipe or tubing end (at least to depth of socket) and inside of valve socket with steel wool, sand paper, sand cloth, etc. Clean with suitable solvent.
3. Apply solder flux or silver braze flux to the inside of the valve socket and the outside of the tubing end.
4. Insert pipe or tubing into the valve socket until it seats against the shoulder within the valve socket. Turn valve, piping or tubing once or twice to evenly distribute the flux.
5. Make certain valve is in partially open position before applying heat. If valve is provided with non-metallic disc, the disc should be removed before heat is applied. After removing the disc, the valve bonnet or bonnet ring should be replaced hand tight to prevent distortion to the threaded sections when heating the valve. The valve and pipe or tubing should be supported during the soldering or silver brazing process, and must not be strained while cooling.
6. Apply flame evenly around pipe or tubing adjacent to valve end until solder or brazing alloy suitable for the service flows upon contact. Apply solder or brazing alloy to the joint between the pipe or tubing and the end of the valve socket. When soldering tubing to valves apply flame toward bottom of valve socket until all solder is absorbed. When silver brazing, wave flame over the valve hexes to draw the metal alloy into the socket leaving a solid fillet of brazing alloy at the joint. Control the direction of the flame away from the valve body to avoid excessive heating which causes distortion and improper functioning of the valve.
7. Remove all excesses with cloth or brush.

PROCEDURE FOR SOCKET OR BUTT WELDING
(PIPE TO VALVES)

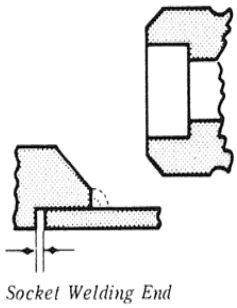

Socket Welding End

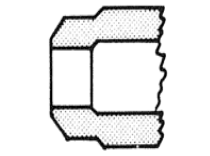

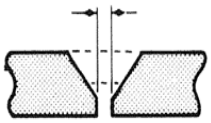

Butt Welding End

1. Machine pipe ends for butt welding joint. For socket welding, cut the pipe end square, making sure the diameter is not undersize or out of round. Remove all burrs.
2. Clean pipe end, valve joint, and inside of valve socket with a degreasing agent to remove oil, grease or other foreign material.
3. For butt welding, space as shown. Align by means of fixtures, and tack weld in place. For socket welding insert pipe into valve socket and space as shown by backing off pipe after it hits against the shoulder within the valve socket or by using a removable spacing collar. This procedure is very important. Tack weld in place.
4. Make certain valve is in partially open position before applying heat. Valve and Pipe should be supported during welding process and must not be strained while cooling.
5. It is recommended that welding be performed in accordance with Section IX of ASME Boiler and Pressure Vessel Code in addition to all other applicable codes.
6. Using the inert Gas-Arc or Metallic Arc method (for highest quality weld, inert Gas-Arc method is recommended), a butt or socket weld is normally completed in two or more passes. Make sure the first pass is clean and free from cracks before proceeding with the second pass. On butt welding the first pass should have complete joint penetration and be flush with the internal bore of the pipe. The second pass should blend smoothly with the base metal and be flush with the external diameter. Excessive Heat causes Distortion and Improper Functioning of the Valve.
7. Discoloration may be removed by wire brushing

METHODS OF OPERATION

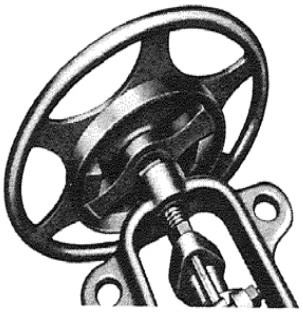

Hammer Blow Handwheel

Powell Cast Steel Globe, Angle and Non Return Valves can be equipped with Hammerblow Handwheel providing additional operating torque to facilitate operation of valves in services where the plain handhweel may be insufficient yet where gearing is not necessary. It is regularly supplied on certain large size valves.

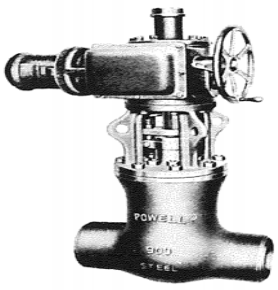

Pressure Seal Gate Valve with Motor Actuator

Motor Actuators give many advantages for remote control of valves. One of frequent use is on large size valves in high pressure power plants. Motor actuated valves are used where valves are inaccessible or where ease of operation, quick opening or closing, or remote control is desired. Motor Actuators are also used where the valve size or internal pressure of fluid make hand operation difficult. Motor units can be electric, air, or gas driven.

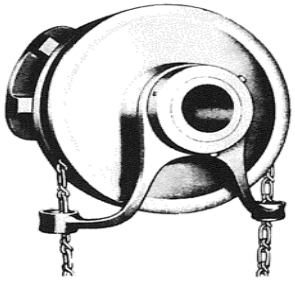

Chainwheel Operated

Sprocket rims with chain guides and chain permits easy operation of valves installed overhead. When chain wheels are used with valves that have a handwheel mounted on the stem, make sure that the stem is strong enough to withstand the extra weight and pull.

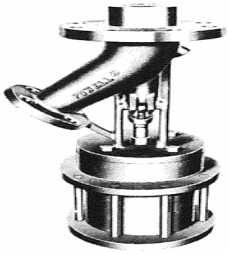

Flush Bottom Tank Valve Air or Hydraulic Cylinder actuated, for operation by remote control.

Cylinder operation is often desirable to speed the opening and closing of valves or when valves are in accessible places. Under normal conditions and with proper care cylinders will last as long as the valves. Valve cylinders are actuated by water, air or oil as the operating medium. Remote control is obtained by locating the operating valve in any convenient place within reasonable distance from the main valve.

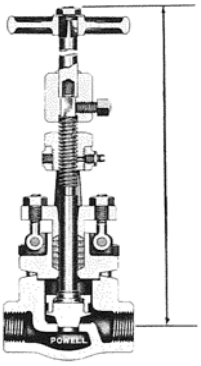

Extension Stem

Extension stems are used where valves are to be operated from a distance, with or without floor stands. Inquiries should specify the length of stem required. Extra long stems must be guided by supports. The above illustrated valve shows the dimension needed; center line of valve to top of handwheel nut.

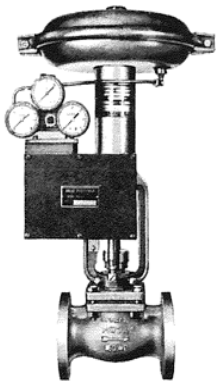

Flanged End Diaphragm actuated Globe Valve with position Indicators

Powell diaphragm actuated valves are air operated. This equipment gives fast, safe, efficient operation of any valve. These air actuated valves are supplied for air operation.

METHODS of OPERATION

ADAPTO GEAR ACTUATORS

Powell Adapto Gear Actuators are the answer to providing ordinary gate, globe, angle, and non-return valves with gear operation. The actuators mount quickly and easily as installation does not require special drilling or tapping of the yoke in most cases.

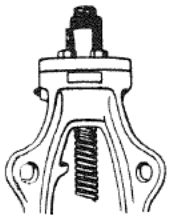

The gearing units are totally enclosed and lubricated for easy operation yet are light enough for one-man installation. Adapto Gear Actuators can be readily mounted on POWELL bronze, iron, steel, and corrosion resistant outside screw and yoke and non-rising stem valves. This series of illustrations show how easy it is to install a POWELL ADAPTO GEAR ACTUATOR on an Anti-Friction Bearing Yoke Gate Valve.

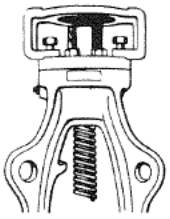

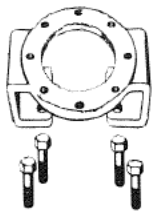

1. Remove the handwheel
2. Remove bolts from the yoke, mount the adaptor, replace bolts and tighten.
3. Install the drive sleeve and key on stem bushing
4. Mount gear actuator on adaptor and bolt together.
5. Conversion is completed.

On installed valves, adaptors are provided so that new stem bushings or yokes are not necessary. The arrangements shown describe the installation of the actuator.

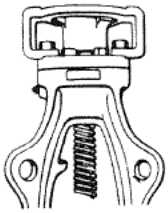



On split yoke valves the conversion is the same except the adaptor is attached to the yoke by utilizing bolts connecting the split yoke.

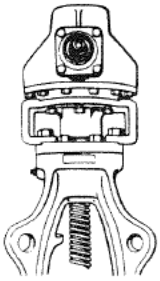

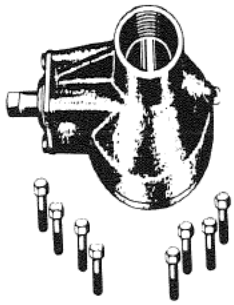

In most cases, field conversion of POWELL VALVES can be completed without removing the valve from service. Only the handwheel and several bolts and nuts are removed. The actuator mounts quickly and easily as the adaptor does not require re-drilling or tapping of the yoke.

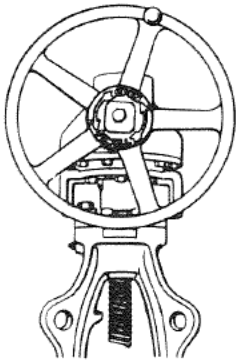

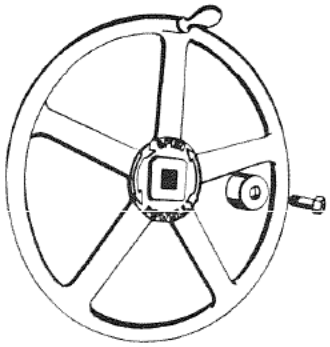

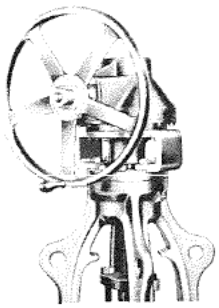

Adapto Gear Actuator for Outside Screw and Anti-Friction Bearing Yoke Valves

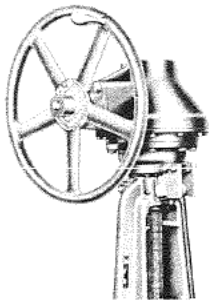

Adapto Gear Actuator for Outside Screw and Split Yoke Valves

OPERATION and MAINTENANCE of VALVES

1. A gate valve should be used in service where it can always be in a fully open or fully closed position. If the wedge is kept in an intermediate or partially open position, the bottom of the wedge and the seat will become badly eroded in a short time. Also, the wedge will tend to chatter and cause noise in the line and premature wear.
2. WHEN RESEATING a gate valve, be sure and mark the wedge so it can be inserted in the valve body the same way it was removed, otherwise a tight closure may not be obtained. When a new wedge is installed, it must be fit to the body seats for proper sealing.
3. LUBRICATION of valves is especially important, and should be done on a strict schedule, at least annually. Valves that are opened and closed frequently should be lubricated at least once a month. On O.S. & Y. valves where the stem is uncovered, the stem threads should be kept clean and lubricated. Stem threads left dry and unprotected will become worn by grit and other abrasives, causing stem failure. Valves with rotating stem bushings are equipped with a lubricant fitting in the upper yoke for stem bushing lubrication. Stem Thread lubrication is performed by applying lubricant directly to the operating threads. For most applications, a general purpose lithium based EP0 or EP1 lubricant is recommended, however, the lubricant must be compatible with the environment in which it is used.
4. FOREIGN MATTER on the seat of a globe valve can usually be flushed off the seat by opening the valve slightly to create a high rate of flow through the small opening provided. If valves do not hold tight, do not use extra leverage or wrenches on the handwheel, as a valve is easily ruined this way. Instead, take the valve apart and inspect disc and seat to locate the source of trouble.
5. PACKING LEAKS should be corrected immediately by tightening the packing nut which compresses the packing. If left unattended stem or packing damage can occur. If packing gland has compressed the packing to its limit, replace with new packing.
6. TO REGRIND renewable seat globe valves, remove the bonnet by unthreading the bonnet ring, or by removing body bolts on a bolted bonnet. Place an ample amount of grinding compound on the disc, insert a pin in the groove of the disc holder and the hole in the stem, then reassemble the bonnet to the body. Thread union bonnet ring (Union Bonnet Design) to hand tightness, then back off about one complete turn. Now the stem can be used as your regrinding tool. By reversing union bonnet ring only one complete turn you assure yourself of the stem being vertical and the disc and seat in perfect alignment. If the disc is off center or cocked the new reground seat will not be true. Do not overgrind, as unnecessary grinding on the seat and disc defeats the purpose of regrinding a renewable valve. When regrinding is completed remove bonnet ring and bonnet, and thoroughly clean the regrinding compound from the seat and disc. Also remove any scale or corrosive deposits which may have formed in the valve body or bonnet. Be sure and lubricate threads before rejoining union bonnet ring and body for easy removal the next time.
7. CAUTION: Before performing any maintenance or repairs to valves, caution must be exercised and all proper safety precautions must be followed as appropriate for the operation performed. This includes but is not limited to those procedures and precautions given on Page 4 under “First Consideration.”

LAPPING SEAT FACES OF POWELL GATE VALVE

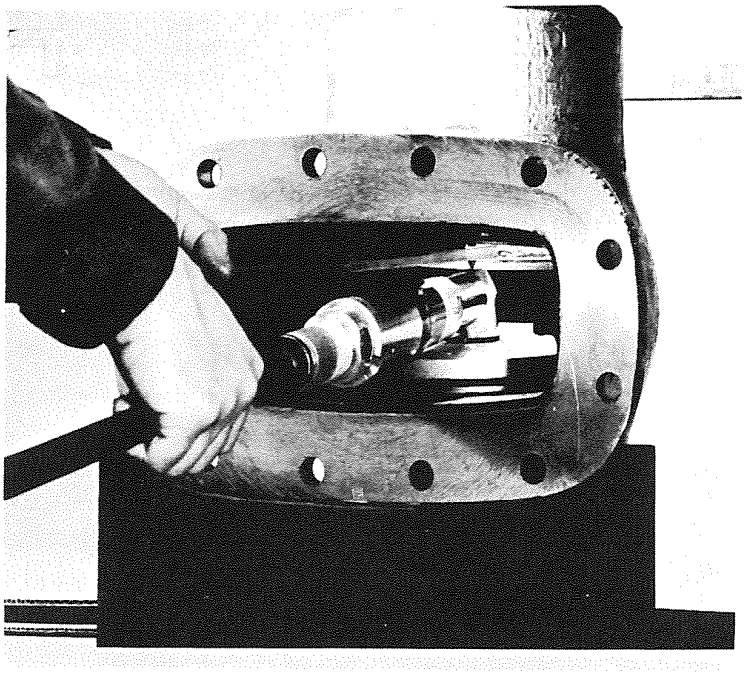

RESEATING A POWELL GLOBE VALVE

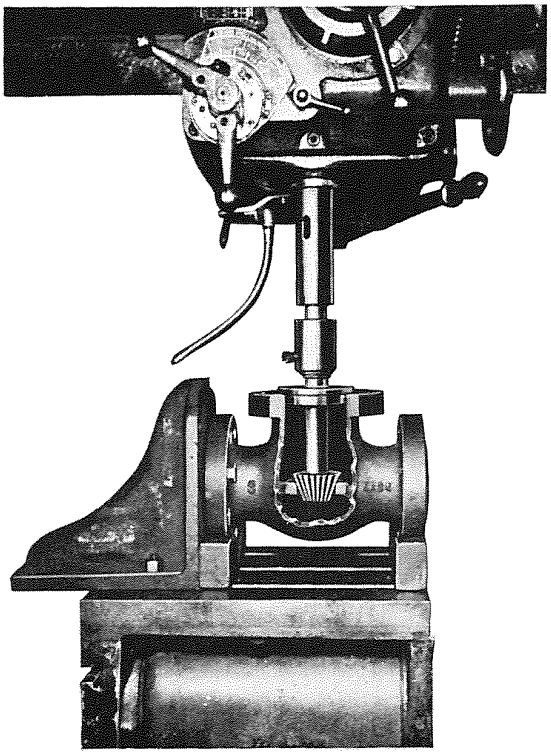

THREADED and UNION BONNET RISING and NON-RISING STEM GATE VALVES
OPERATIONAL and REPAIR PROCEDURE

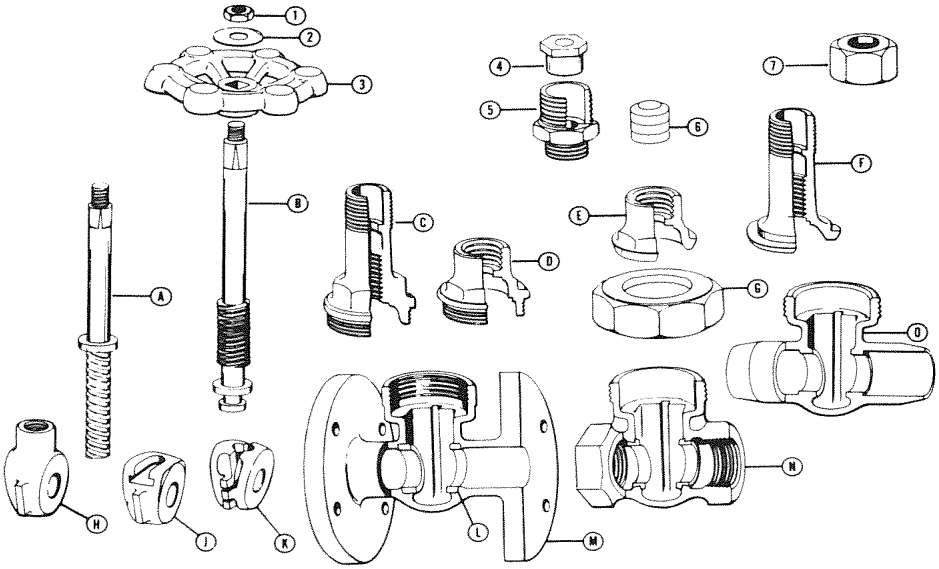

PARTS IDENTIFICATION

1. Handwheel Nut
2. Identification Plate
3. Handwheel
4. Packing Gland
5. Packing Box Spud

(Non-Rising Stem Valves only)

6. Packing
7. Packing Nut

A. Stem—Non Rising Stem Valves
B. Stem—Rising Stem Valves
C. Threaded-in Bonnet—Rising Stem Valves
D. Threaded-in Bonnet—Non-Rising Stem Valves
E. Union Bonnet—Non-Rising Stem Valves
F. Union Bonnet—Rising Stem Valves
G. Bonnet Ring
H. Solid Wedge—Non-Rising Stem Valves
J. Solid Wedge—Rising Stem Valves
K. Double Wedge—Rising Stem Valves
L. Seat Ring
M. Body—Flanged Ends
N. Body—Threaded Ends
O. Body—Solder Joint End

OPERATION:
These gate valves are manual operated. To close, turn the handwheel (part 3) in a clockwise direction; to open, turn the handwheel (part 3) in a counterclockwise direction.

INSPECTION:
Periodical inspection and preventive maintenance is not required.

REPAIR PARTS:
All parts are shown on this page. When ordering repair parts, be sure to give valve figure number, size and material; if applicable, metal when other than standard.

PROCEDURES FOR REPAIR: (CAUTION: See note 7 on page 15)

1. Stuffing Box Leakage – If there is leakage around the stuffing box when operating the valve, it is necessary to adjust or replace the packing. Leakage would not show when the valve is completely open or closed. To adjust the packing, turn the packing nut (part 7) clockwise until leakage stops. If leakage continues, it is necessary to replace the packing as follows:
   a. Remove handwheel nut (part 1), identification plate (part 2) and handwheel (part 3).
   b. Remove packing nut (part 7) by turning counterclockwise until nut can be lifted off.
   c. Slip the packing gland (part 4) off of the stem (part A or B).
   d. Remove old packing (part 6).
   e. Install the correct new packing (part 6)
   f. Replace packing gland (part 4).
   g. Replace packing nut (part 7) and pull down snug – no tight.
   h. Replace handwheel (part 3), identification plate (part 2) and handwheel nut (part 1). Valve is ready to operate.
2. Seat Leakage – If valve seat leaks, it will be necessary to replace the wedge (part H, J, or K) as follows:
   a. Remove bonnet ring (part G) by turning counterclockwise and lift out bonnet assembly. If valve has screwed-in bonnet, turn bonnet counterclockwise and remove complete assembly.
   b. Run the stem (part A or B) down by turning in a clockwise direction.
   c. Slip the wedge (part J or K) off of the stem (rising stem valves).
   d. Remove wedge (part H) from stem by turning in clockwise direction (non-rising stem valves).
   e. Replace wedge (part H, J, or K).
   f. Remove seat ring (part L) if applicable. Remove wedge assembly. Use seat ring wrench and insert in the seat ring until lugs engage slots. Turn in counterclockwise direction to remove from body (part M, N, or O). Replace seat ring.
3. Damaged Stem (part A or B) – When stem threads become damaged so the valve is inoperable, replace stem as follows:
   a. Remove handwheel nut (part 1), identification plate (part 2) and handwheel (part 3).
   b. Remove bonnet (part C, D, E, or F) with a wrench by turning in a counterclockwise direction.
   c. Remove this complete assembly from the valve body (part M, N, or O).

RISING STEM VALVES

   d. Run the stem (part B) down by turning it in a clockwise direction
   e. Remove the wedge (part J or K) from the stem (part B) by following procedures outlined above in Number 2.
   f. Rotate the stem (part B) in a clockwise direction until the stem thread is completely out of the threaded portion of the stuffing box.
   g. Remove the stem (part B) by pulling it out of the stuffing box.
   h. Replace the stem (part B) by the reversing above procedure.

NON-RISING STEM VALVES

   i. Secure flats of bonnet (part D or E) in vise. Remove packing nut (part 7) by turning in counterclockwise direction.
   j. Remove wedge (part H) from stem (part A) by turning in clockwise direction.
   k. Slip packing gland (part 4) off of the stem (part A).
   l. Remove packing (part 6).
   m. Remove packing box spud (part 5) by turning counterclockwise and slip off of stem (part A).
   n. Replace stem (part A) by reversing above procedure.

NOTE: Whenever a new stem is installed, it is necessary to replace the packing (part 6).

BOLTED BONNET O.S. & Y. RISING STEM GATE VALVES

OPERATIONAL and REPAIR PROCEDURE

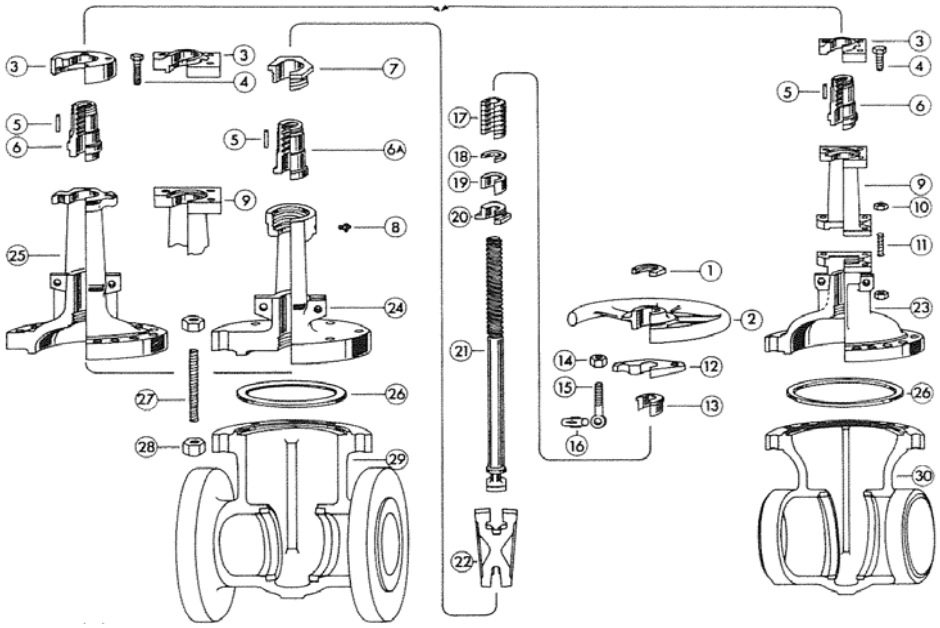

PARTS IDENTIFICATION

1	Handwheel Nut
2	Handwheel
3	Bearing Cap
4	Cap Screw
5	Handwheel Key
6	Stem Bushing
7	Stem Bushing Locknut
8	Lubricant Fitting
9	Yokearm – (10" – 12")
10	Yokearm Nut
11	Yokearm Stud
12	Gland Flange
13	Gland
14	Eyebolt Nut
15	Eyebolt
16	Groove-Pin
17	Packing
18	Packing Washer
19	Packing Spacer
20	Lower Bonnet Bushing
21	Stem
22	Flexible Wedge
23	Bonnet – (10" – 12")
24	Bonnet – (2" – 4")
25	Bonnet – (6" – 8")
26	Gasket
27	Body Stud
28	Body Nut
29	Body – Flanged
30	Body - Weld

OPERATION:

These gate valves are manually operated. To open, turn the handwheel (part 2) in a counterclockwise direction until valve is full open: To close, turn the handwheel (part 2) in a clockwise direction until wedge is snug against the seat.

INSPECTION:

No periodical inspection or preventative maintenance is required, other than lubricating the stem (part 21) and stem bushing (part 6, 6A) per recommendations on page 15.

REPAIR PARTS:

All parts are shown on this page. When ordering repair parts be sure to give valve figure number, size, material, and serial number: If applicable, metal other than standard.

PROCEDURES FOR REPAIR: (CAUTION: See note 7 on page 15)

1. Stuffing Box Leakage… While operating valve, leakage around the stuffing box indicates the necessity to adjust or replace the packing. Suck leakage will not show when the valve is completely opened or closed.
   - I. To Adjust Packing… Turn eyebolt nuts (part 14) in a clockwise direction. Gland eyebolt nuts must be adjusted alternately with no more than ¼ turn on each until leakage stops. If leakage continues replace the packing.
   - II. To Replace Packing… Caution: Pressure must be completely removed before replacing the packing.
     a. Remove eyebolt nuts (part 14).
     b. Raise gland flange (part 12) and gland (part 13).
     c. Remove packing (part 17) with packing hooks.
     d. Install new packing, and reassemble by reversing above procedure.
2. Replace Stem Bushing… Caution: Pressure must be completely removed before replacing the stem bushing.
   - I. Yokearm Design
     a. Remove handwheel nut (part 1) by turning counterclockwise.
     b. Remove handwheel (part 2).
     c. Remove handwheel key (part 5).
     d. Remove bearing cap screws (part 4).
     e. Lift off bearing cap screws (part 4).
     f. Lift off bearing cap (part 3).
     g. Turn upper bushing (part 6) clockwise and remove from stem.
     h. Replace bushing (part 6) and reassemble by reversing above procedure.
   - II. One-piece Bonnet Design
     a. Remove handwheel nut (part 1) by turning counterclockwise.
     b. Remove handwheel (part 2).
     c. Remove handwheel key (part 5).
     d. With standard wrench turn bearing cap screws (part 4) or remove weld from bushing locknut (part 7) and turn in a counterclockwise direction.
     e. Remove bearing cap (part 31) or stem bushing locknut (part 7).
     f. Turn stem bushing (part 6 or 6A) clockwise and remove from stem.
     g. Replace stem bushing (part 6 or 6A) and reassemble by reversing above procedure.
3. Replaced Damaged Stem… Follow plant procedures for removing valve from service and removing pressure from valve.
   a. Slightly open valve (this takes pressure off seat face).
   b. Remove body to bonnet studs (part 27) and nuts (part 28).
   c. Gripping handwheel (part 2) lift upper structure until stem and wedge are entirely free of the valve body.
   d. Wedge can be removed from "T" head of stem with ease.
   e. Grip "T" head of stem (part 21) turn clockwise, stem will wind down and out of bonnet.
   f. Install new stem (part 21).
   g. Inspect wedge and seat ring for pitting and wear before sliding wedge on "T" head of stem and installing in the body. (Wedge should be installed in the body in the same position it was removed).
   h. Connect body and bonnet with studs (part 27) and nuts (part 28).
4. Replace Wedge… Follow plant procedures for removing valve from service and removing pressure from valve.
   a. Slightly open valve (this takes pressure off seat face).
   b. Remove body to bonnet studs and nuts (part 27 and 28).
   c. Gripping handwheel (part 2) lift entire bonnet structure until wedge is free of body.
   d. Slide wedge from "T" head of stem.
   e. Install new wedge (part 22), (lap the wedge faces).
   f. Connect body and bonnet with studs (part 27) and nuts (part 28).

NOTE: Whenever body and bonnet are separated, a new gasket (part 26) should be installed before reassembly. When stem (part 21) is removed, it is necessary to replace the packing (part 17).

BOLTED BONNET INSIDE THREAD NON-RISING STEM
GATE VALVES
OPERATIONAL and REPAIR PROCEDURE

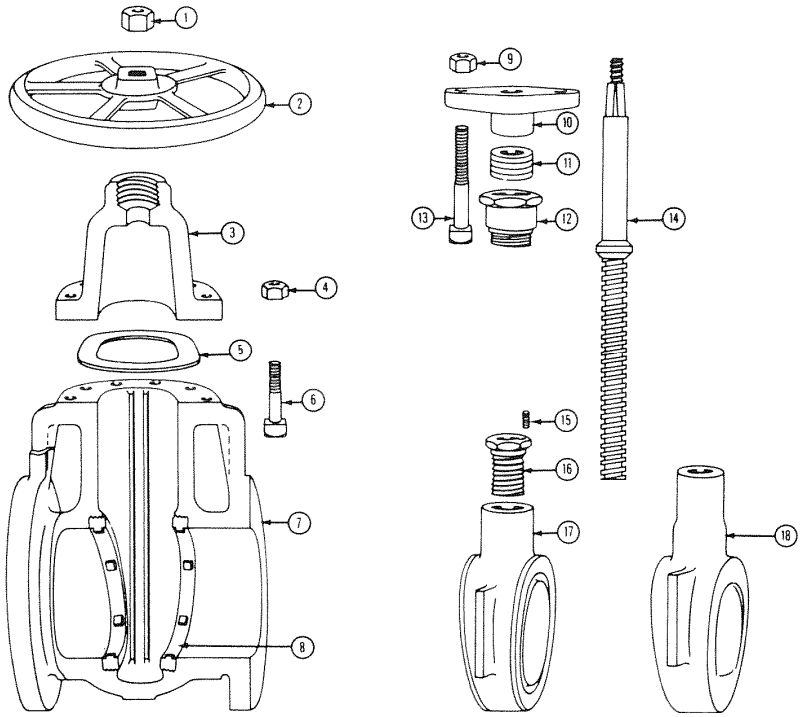

PARTS IDENTIFICATION

1. Handwheel Nut
2. Handwheel
3. Bonnet
4. Body Nuts
5. Gasket
6. Body Bolts
7. Body
8. Seat Ring
9. Gland Nuts
10. Packing Gland
11. Packing
12. Spud
13. Gland Bolts
14. Stem
15. Wedge Nut Set Screw
16. Wedge Nut
17. Wedge
18. Wedge

OPERATION:
These gate valves are manually operated. To open, turn the handwheel (part 2) in a counterclockwise direction. To close, turn the handwheel (part 2) in a clockwise direction.

INSPECTION:
Periodical inspection and preventive maintenance is not required.

REPAIR PARTS:
All parts are shown on this page. When ordering repair parts, be sure to give valve figure number, size, material and serial number. If applicable, metal when other than standard.

PROCEDURE FOR REPAIRING: (CAUTION: See note 7 on page 15)
1. Stuffing Box Leakage… If leakage of the stuffing box occurs, tighten the gland nuts by turning 1/4 turn alternately until leakage stops. Replace packing, if leakage cannot be shut off by tightening gland nuts. The valve should not be under pressure when replacing packing. Replace packing as follows:

a. Remove packing gland nuts
b. Raise packing gland
c. Remove Packing (part 11) with packing hooks
d. Install new packing
e. Replace packing gland
f. Tighten packing gland nuts evenly on both sides-pull down snug not tight
g. Adjust as required when under pressure

Replacement of packing when a valve is back seated is hazardous and not recommended.

2. Seat Leakage – If valve seat leaks, it will be necessary to replace the wedge (parts 17 or 18) or the seat ring (part 8). Caution: Pressure must be completely removed before replacing wedge.

a. Open valve.
b. Remove body-to-bonnet nuts (part 4) and bolts (part 6). Complete assembly can now be lifted out of valve body (part 7).
c. Run the stem (part 14) down by turning clockwise.
d. Remove wedge (part 18) from stem (part 14) by turning in clockwise direction or remove wedge (part 17) by removing set screw (part 15) and wedge nut (part 16) by turning in counterclockwise direction.
e. Replace wedge (part 17 or 18).
f. Remove seat ring (part 8) if applicable. Use seat ring wrench and remove by turning counterclockwise. Install new seat ring. (Lap the seat face).
g. Reassemble by reversing above procedures.

3. Damaged Stem – When stem threads become damaged so the valve is inoperable, replace the stem (part 14) as follows: Caution: All pressure must be completely removed before replacing the stem.

a. Remove body-to-bonnet nuts (part 4) and bolts (part 6). Complete assembly can now be lifted out of valve body (part 7).
b. Remove handwheel nut (part 1) and handwheel (part 2)
c. Remove packing gland nuts (part 9), packing gland (part 10) and packing (part 11).
d. Remove stuffing box spud (part 12) by turning counterclockwise and slip off of stem (part 14).
e. Remove wedge (part 17 or 18).
f. Install new stem (part 14) and reassemble by reversing above procedures.

NOTE: Whenever a new stem is installed, it is necessary to replace the packing (part 11).
When body and bonnet are separated, a new gasket (part 5) should be installed before reassembly.

THREADED and UNION BONNET GLOBE and ANGLE VALVES

OPERATIONAL and REPAIR PROCEDURE

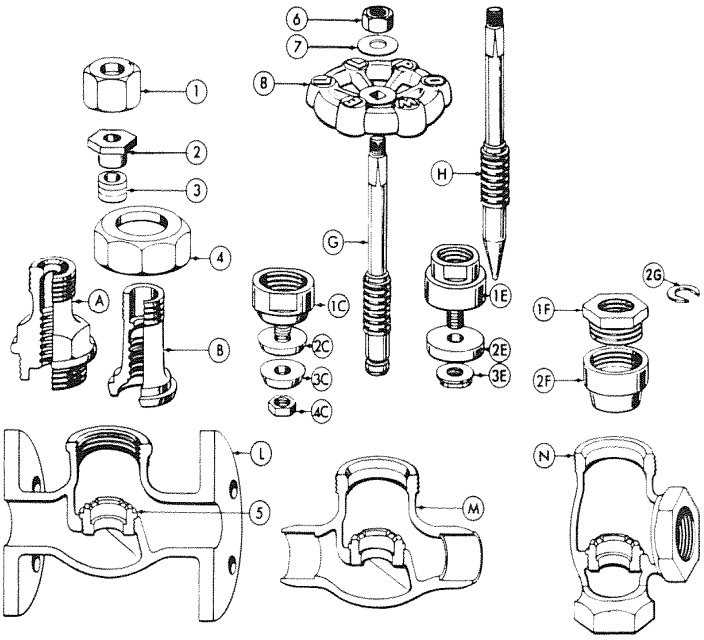

PARTS IDENTIFICATION

1. Packing Nut
2. Packing Gland
3. Packing
4. Bonnet Ring
5. Seat Ring
6. Handwheel Nut
7. Identification Plate
8. Handwheel

A. Threaded-in Bonnet

B. Union Bonnet

C. Hi-Lo Disc
   - 1C—Disc Holder
   - 2C—Non-Metallic Disc
   - 3C—Disc Plate
   - 4C—Disc Nut

E. Composition Disc
   - 1E—Disc Holder
   - 2E—Non-Metallic Disc
   - 3E—Disc Locknut Washer

F. Disc Locknut
   - 1F—Disc Nut
   - 2F—Disc

G. Stem—Disc Locknut (Horseshoe Ring) Type
   - 2G—Horseshoe Ring

L. Body—Globe-Flanged Ends

M. Body—Globe-Solder Joint Ends

N. Body—Angle-Threaded Ends

OPERATION:

These globe valves are manually operated. To close, turn the handwheel (part 8) in a clockwise direction; to open, turn the handwheel (part 8) in a counterclockwise direction.

INSPECTION:

Periodical inspection and preventative maintenance is not required.

REPAIR PARTS:

All parts are shown on this page. When ordering repair parts, be sure to give valve figure number, size and material; if applicable metal when other than standard.

PROCEDURE FOR REPAIRING: (CAUTION: See note 7 on page 15)

1. Stuffing Box Leakage—If there is leakage around the stuffing box when operating the valve, it is necessary to adjust or replace the packaging. Leakage would not show when the valve is completely opened or closed. To adjust the packing, turn the packing nut (part 1) clockwise until leakage stops. If leakage continues, it is necessary to replace the packing. This is accomplished by:
   a. Remove handwheel nut (part 6), identification plate (part 7) and handwheel (part 8).
   b. Remove packing nut (part 1) by turning counterclockwise until nut can be lifted off.
   c. Slip the packing gland (part 2) off of the stem (part G or H).
   d. Remove the old packing (part 3).
   e. Install the correct new packing (part 3)
   f. Return packing gland (part 2) (when applicable).
   g. Return packing nut (part 1) and pull down snug—not tight
   h. Replace handwheel (part 8), identification plate (part 7) and handwheel nut (part 6). Valve is ready to operate.

2. Seat Leakage—If valve seat leaks, it will be necessary to replace the disc (part 2F), or Hi-Lo disc assembly (part 1C, 2C, 3C, 4C), or composition disc (part 2E), or if needle valve, replace stem (part H) – and seat ring (part 5). If valve has integral seat, refinish seat in body with seating tool.
   a. Remove bonnet ring (part 4) by turning clockwise and lift out bonnet assembly. If valve has screwed-in bonnet, turn bonnet counterclockwise and remove complete assembly.
   b. Run the stem (part G or H) down by turning in a clockwise direction.
   c. Remove disc (parts C, E, F) from the stem. Disc Nut Type: remove the stem (part G) from the bonnet (part B). Secure disc (part 2F) in a vise by holding to square flats provided. Turn locknut (part 1F) counterclockwise with adjustable wrench until disengaged from disc (part 2F). Slide horse shoe ring (part 2G) from groove in stem (part G). Replace disc (part 2F).
   Hi-Lo Type: remove the stem (part G) from the bonnet (part B). Secure disc holder (part 1C) in a vise by holding to square flats provided. Remove disc nut (part 4C) with adjustable wrench by turning counterclockwise. Remove disc (part 3C) and disc plate (part 2C). Replace with new disc.
   Composition Type: remove the stem (part G) from the bonnet (part B). Secure disc holder (part 1E) in a vise by holding to square flats provided. Remove disc nut (part 3E) with adjustable wrench by turning counterclockwise. Remove disc (part 2E) and replace with new.
   d. Remove seat ring (part 5).
   Remove disc assembly. Use seat ring wrench and insert in the seat ring until lugs engage slots. Turn in counterclockwise direction to remove from body (parts L, M, N). Replace seat ring.

3. Damaged Stem (part G, H)—When stem threads become damaged so the valve is inoperable, replace the stem as follows:
   a. Remove handwheel nut (part 6) and handwheel (part 8).
   b. Remove the bonnet (parts A, B) with a wrench by turning in a counterclockwise direction.
   c. Remove this complete assembly from the valve body (parts L, M, N).
   d. Run the stem (parts G, H) down by turning in a clockwise direction.
   e. Rotate stem (parts G, H) in clockwise direction until the stem thread is completely out of the threaded portion of the stuffing box.
   f. Remove the stem (parts G, H) by pulling out the stuffing box.
   g. Remove disc (parts C, E, F) from stem by following procedures outlined above (No.2)
   h. Install new stem parts G, H) by reversing above procedure. NOTE: Whenever a new stem is installed, it is necessary to replace the packing (part 3)

BOLTED BONNET O.S. & Y. GLOBE and ANGLE VALVES

-BRONZE DESIGN-

OPERATIONAL and REPAIR PROCEDURE

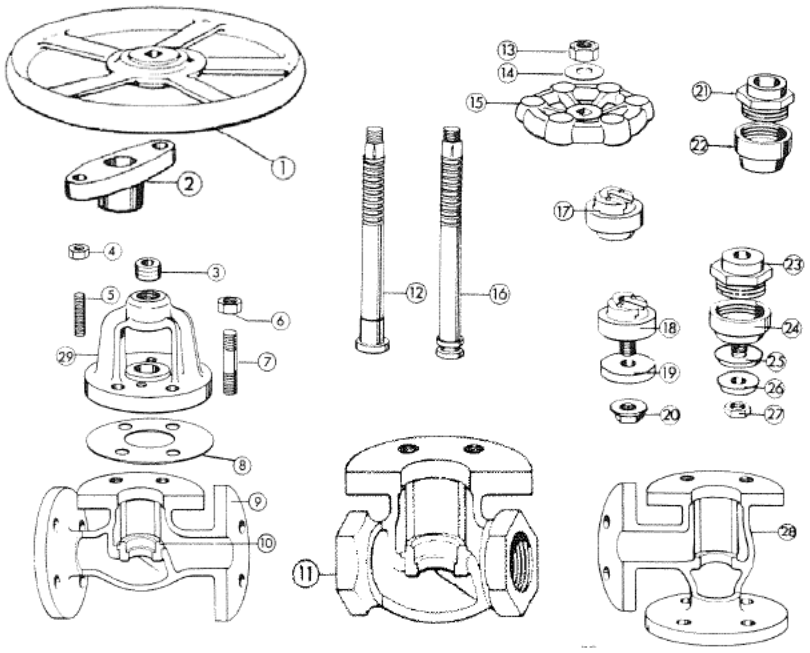

PARTS IDENTIFICATION

1	Handwheel (Round)
2	Packing Gland
3	Packing
4	Gland Stud Nut
5	Gland Stud
6	Yoke Stud Nut
7	Yoke Stud
8	Gasket
9	Body—Globe—Flanged Ends
10	Seat Ring
11	Body—Globe—Threaded Ends
12	Stem—Disc Locknut Type
13	Handwheel Nut
14	Identification Plate
15	Handwheel
16	Stem—Slip-on Type
17	Disc—One-Piece—Slip-on
18	Composition Disc Holder
19	Composition Disc
20	Disc Nut
21	Disc Locknut
22	Disc
23	Disc Locknut—Hi-Lo Disc
24	Disc Holder
25	Non-Metallic Disc
26	Disc Plate
27	Disc Nut
28	Body—Angle—Flanged Ends
29	Yoke

OPERATION:

These globe and angle valves are manual operated. To close, turn the handwheel (part 1 or 15) in a clockwise direction; to open, turn the handwheel (part 1 or 15) in a counterclockwise direction.

INSPECTION:

Periodical inspection and preventative maintenance is not required other than stem (part 12 or 16) lubrication per recommendations on page 15.

REPAIR PARTS:

All parts are shown on this page. When ordering repair parts, be sure to give valve figure number, size, and material, also type of disc material; if applicable, metal when other than standard.

PROCEDURES FOR REPAIR: (CAUTION: See note 7 on page 15)

1. Stuffing Box Leakage—If there is leakage around the stuffing box when operating the valve, it is necessary to adjust or replace the packing. Leakage would not show when the valve is completely opened or closed. To adjust the packing, turn gland stud nuts (part 4) in clockwise direction. Gland nuts must be adjusted alternately with not more than 1/4" turn. If leakage continues, it is necessary to replace the packing.
   a. Remove handwheel nut (part 13) identification plate (part 14) and handwheel (part 1 or 15).
   b. Remove gland stud nuts (part 4) by turning in counterclockwise direction.
   c. Remove upper valve assembly by removing stud nuts (part 6).
   d. Turn stem (part 12 or 16) in clockwise direction until threads are clear. Pull stem and disc assembly straight down through yoke-bonnet.
   e. Packing gland (part 2) will now lift out exposing the packing.
   f. Packing (part 3) can now be lifted out.
   g. Insert new packing and reassemble reversing above procedure. CAUTION: be careful not to damage new packing when feeding stem. Packing gland (part 2) must be inserted before threading stem.
2. Seat Leakage—If valve leaks, it will be necessary to replace the disc (part 17, 19, 22, or 25) or seat ring (part 10).
   a. Remove upper valve assembly by removing bonnet stud nuts (part 6).
   b. Remove disc (part 17, 19, 22, or 25) from stem (part 12, 16). Slip-on Type: the disc (part 17) will slip off of the stem (part 16).
      Composition Type: disc holder (part 18) will slip off of the stem (part 16). Secure disc holder (part 18) and remove disc nut (part 20) with wrench by turning counterclockwise. Remove disc (part 19) from recess in bottom of disc holder (part 18). Replace with new and reassemble.
      Disc Nut Type: remove the stem (part 12) from the bonnet as outlined in above (No. 1—Stuffing Box Leakage). Secure disc (part 22) in a vise by holding to square flats provided. Turn locknut (part 21) counterclockwise, with adjustable wrench, until disengaged from disc (part 22). Replace disc and reassemble.
      Hi-Lo Type: remove the stem (part 12) form the bonnet as outlined above (No. 1—Stuffing Box Leakage). Secure disc holder (part 24) in vise on flats provided. Remove disc nut (part 27) with adjustable wrench by turning counterclockwise. Remove disc plate (part 26) and disc (part 25). Replace with new disc and reassemble.
   c. Remove seat ring (part 10). Remove disc assembly. Use a seat ring wrench and insert in the seat ring until lugs engage slots. Turn in counterclockwise direction to remove from body (part 9, 11, 28). Replace seat ring.
3. Damaged Stem (part 12, 16)—When stem threads become damaged so the valve is inoperable, replace the stem as follows:
   a. Remove handwheel nut (part 13), identification plate (part 14) and handwheel (part 1 or 15).
   b. Remove gland nuts (part 4) by turning in a counterclockwise direction.
   c. Remove the upper bonnet assembly by removing the bonnet stud nuts (part 6).
   d. Turn stem (part 12, 16) in clockwise direction until threads are clear. Pull stem (part 12, 16) and disc assembly straight down through yoke-bonnet.
   e. Remove disc assembly as outlined above (No. 2—Seat Leakage).
   f. Use new stem and reassemble by reversing above procedure.

NOTE: When a new stem or disc (when stem has to be removed) is installed, it is necessary to replace the packing (part 3). When body-to-bonnet joint is broken, it is necessary to install a new gasket (part 8).

BOLTED BONNET O.S. & Y. GLOBE and ANGLE VALVES

-IRON & STEEL DESIGN-
OPERATIONAL and REPAIR PROCEDURE

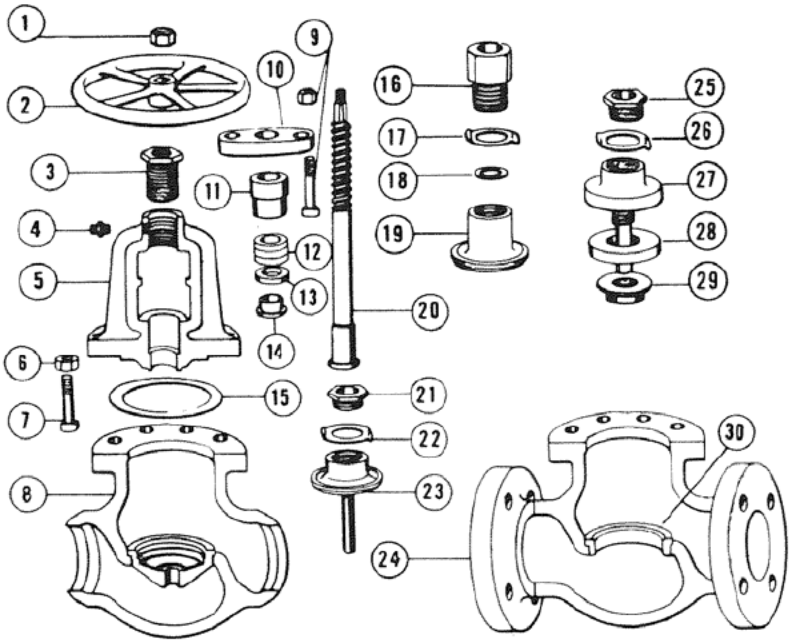

PARTS IDENTIFICATION

1. Handwheel Nut
2. Handwheel
3. Upper Brushing
4. Lubricant Fitting
5. Bonnet
6. Body Nut
7. Body Bolt
8. Body—Globe—Butt Welding Ends
9. Packing Gland Bolt and Nut
10. Packing Gland (Two-piece)
11. Packing Gland (Two-piece)
12. Packing
13. Packing Washer
14. Back Seat Bushing
15. Gasket
16. Disc Nut-Plug Type Disc
17. Lockwasher-Plug Type disc
18. Thrust Washer-Plug Type Disc
19. Plug Type Disc
20. Stem
21. Disc Nut-Guided Disc
22. Lockwasher-Guided Disc
23. Guided Disc
24. Body—Globe—flanged Ends
25. Disc Locknut-Composition Disc
26. Lockwasher-Composition Disc
27. Disc Holder-Composition Disc
28. Composition Disc
29. Disc Nut-Composition Disc
30. Seat Ring

OPERATION:

These globe and angle valves are manual operated. To close, turn the handwheel (part 2) in a clockwise direction: to open, turn the handwheel (part 2) in a counterclockwise direction.

INSPECTION:

Periodical inspection and preventative maintenance is not required other than stem (part 20) lubrication per recommendations on page 15.

REPAIR PARTS:

All parts are shown on this page. When ordering repair parts, be sure to give figure number, size, and serial number, also disc material when a composition is used; if applicable, metal when other than standard.

PROCEDURES FOR REPAIR: (CAUTION: See note 7 on page 15)

1. Stuffing Box Leakage… If leakage of the stuffing box occurs, tighten the gland nuts by turning 1/4 turn alternately until leakage stops. Replace packing, if leakage cannot be shut off by tightening gland nuts. The valve should not be under pressure when replacing packing. Replace packing as follows:
   a. Remove packing gland nuts (part 9)
   b. Raise packing gland (part 10) and rest on gland shelf
   c. If two-piece gland, raise both glands (part 10 and 11) and remove packing (part 12) with packing hooks
   d. Install new packing (part 12). Packing is cut and when installing make sure ends meet snugly
   e. Replace packing gland or glands (part 10 or 11)
   f. Tighten packing gland nuts (part 9) evenly on both sides-pull down snug-not tight
   g. Adjust as required when under pressure

   Replacement of packing when a valve is back seated is hazardous and not recommended.
2. Seat Leakage—If valve seat leaks, it will be necessary to replace the disc (parts 19, 23, or 28) or seat ring (part 30). Pressure must be completely removed before removing disc.
   a. Open valve.
   b. Remove body-to-bonnet nuts (part 6) from bolts (part 7). Complete assembly can now be lifted out of valve body (part 8 or 24).
   c. Run the stem (part 20) down by turning in a clockwise direction.
   d. Remove disc (parts 19, 23, 28) from stem.
      Guided Disc: remove disc (part 23) from disc nut (part 21) and lockwasher (part 22) by turning in counterclockwise direction. Replace with new disc
      Plug Type Disc: remove disc (part 19) from disc nut (part 16) lockwasher (part 17) and thrust washer (part 18) by turning in counterclockwise direction. Replace disc.
      Composition Disc: remove disc assembly (parts 27, 28, 29) from disc nut (part 25) and lockwasher (part 26) by turning in a counterclockwise direction. Secure disc holder (part 27), remove disc nut (part 29) and disc (part 28). Replace disc (part 28) and reassemble.
   e. Remove seat ring (part 30). Use seat ring wrench and remove seat ring (part 30) by turning counterclockwise. Install new seat ring and reassemble.
3. Damaged Stem (part 20)—When stem threads become damaged so that valve is inoperable, replace the stem as follows:
   a. Remove complete bonnet assembly by removing bonnet nuts (part 6) from bonnet bolts (part 7).
   b. Remove handwheel nut (part 1) and handwheel (part 2).
   c. Run the stem (part 20) down by turning in a clockwise direction.
   d. Rotate stem (part 20) in a clockwise direction until the stem thread is completely out of the threaded portion of upper bushing (part 3).
   e. Remove the stem (part 20) by pulling out of the stuffing box.
   f. Remove disc (parts 19, 23, 28) from stem by following procedures outlined above. (No. 2).
   g. Install new stem (part 20) and reassemble by reversing above procedure.
4. Replace Stem Bushing: Follow plant procedures for removing valve from service and removing pressure from valve.
   a. Open valve approximately five (5) turns.
   b. With wrench turn bushing (part 3) counterclockwise simultaneously with handwheel (part 2) until bushing is free of bonnet (part 5).
   c. Remove handwheel nut (part 1) and handwheel (part 2).
   d. Turn bushing (part 3) counterclockwise and remove from stem (part 20).
   e. Replace bushing (part 3) and reassemble by reversing above procedure.

NOTE: Whenever a new stem is installed it is necessary to replace the packing (part 12). When body and bonnet are separated, a new gasket (part 15) should be installed before reassembly.

BOLTED BONNET O.S. & Y. GLOBE VALVES

OPERATIONAL and REPAIR PROCEDURE

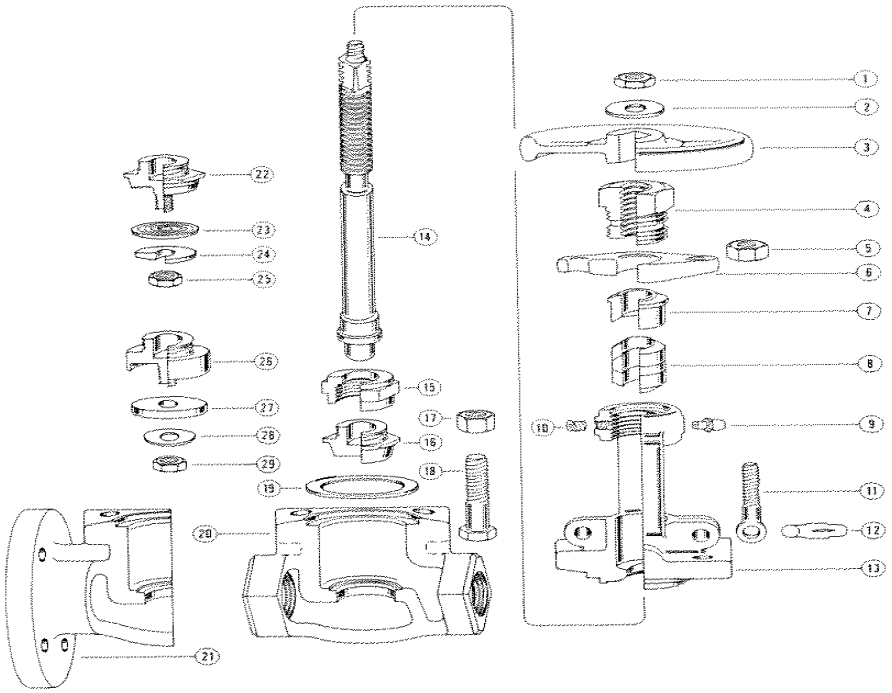

PARTS IDENTIFICATION

1. Handwheel Nut
2. Identification Plate
3. Handwheel
4. Yoke Bushing
5. Gland Eyebolt Nut
6. Gland Flange
7. Gland Follower
8. Packing
9. Lubricant Fitting
10. Headless Set Screw
11. Gland Eyebolt
12. Gland Eyebolt Pin
13. Yoke
14. Stem
15. Disc Locknut
16. Disc
17. Yoke Bolt Nut
18. Yoke Bolt
19. Gasket
20. Body – Threaded Ends
21. Body – Flanged Ends
22. Disc Holder – Hi-Lo
23. Non-Metallic Disc – Hi-Lo
24. Disc Plate – Hi-Lo
25. Disc Nut – Hi-Lo
26. Disc Holder – Composition Disc
27. Composition Disc
28. Disc Plate – Composition Disc
29. Disc Nut – Composition Disc

OPERATION:

These globe valves are manual operated. To close, turn handwheel (part 3) in a clockwise direction; to open, turn the handwheel (part 3) in a counterclockwise direction.

INSPECTION:

Periodical inspection and preventative maintenance is not required other than stem (part 14) lubrication per recommendations on page 15.

REPAIR PARTS:

All parts are shown on this page. When ordering repair parts, be sure to give the figure number, size,,serial number and material. Also give the disc material when a composition is used; if applicable, metal when other than standard.

PROCEDURES FOR REPAIR: (CAUTION: See note 7 on page 15)

1. Stuffing Box Leakage—If there is leakage around the stuffing box, it is necessary to adjust or replace the packing. Leakage would not show when the valve is completely opened or closed. To adjust the packing, tighten the gland nuts (part 5) ¼ turn alternately until leakage stops. If leakage continues, it is necessary to replace the packing. Caution: The valve should not be under pressure when replacing the packing.
   For split packing only:
   a. Remove packing gland nuts (part 5).
   b. Raise gland flange (part 6) and gland follower (part 7), and remove packing (part 8) with packing hooks.
   c. Install new packing (part 8). Packing is cut and when installing make sure ends meet snugly
   d. Replace packing gland follower (part 7) and packing gland flange (part 6).
   e. Tighten packing gland nuts (part 5 evenly on both sides – pull down snug – not tight.

NOTE: When solid packing is used follow step 3 below.

2. Seat Leakage – If the valve seat leaks, it will be necessary to replace the disc (part 16), or Hi-Lo disc assembly (part 22, 23, 24, 25), or composition disc (part 27). Pressure must be completely removed before removing disc. Refinish the seat in body with a seating tool.
   a. Open valve.
   b. Remove body-to-bonnet nuts (part 17) from bolts (part 18). Complete assembly can now be lifted out of the valve body (part 20 or 21).
   c. Run the stem (part 14) down by turning in a clockwise direction.
   d. Remove disc (part 16) or disc assemblies from the stem.
   Disc Nut Type: remove the stem (part 14) from the bonnet (part 13). Secure disc locknut (part 15) by holding to square flats provided. Turn disc (part 16) counterclockwise with adjustable wrench until disengaged from the disc locknut. Replace disc.
   Composition Type: remove the stem (part 14) from the bonnet (part 13). Secure disc holder (part 26) in jaws of vise on flats provided. Remove disc nut (part 29), with adjustable wrench, but turning counterclockwise.
   Remove disc (part 27) from recess in bottom of disc holder and replace with new.
   Hi-Lo Type: remove the stem (part 14) from the bonnet (part 13). Secure disc locknut (part 15) in jaws of vise on flats provided. Remove disc assembly (part 22, 23, 24, 25) with adjustable wrench by turning counterclockwise. Replace disc assembly by securing disc holder (part 22) in disc locknut (part 15).
3. Damaged Stem (part 14) – When stem threads become damaged so the valve is inoperable, replace the stem as follows:
   a. Remove complete bonnet assembly by removing bonnet nuts (part 17) from bonnet bolts (part 18).
   b. Remove handwheel nut (part 1), identification plate (part 2), and handwheel (part 3).
   c. Remove gland nuts (part 5) and loosen packing gland (part 6) and gland follower (part 7).
   d. Run the stem (part 14) down by turning in a clockwise direction.
   e. Rotate stem (part 14) in a clockwise direction until the stem thread is completely out of the threaded portion of upper bushing (part 4).
   f. Remove the stem (part 14) by pulling out of the stuffing box.
   g. Replace packing; see step 1 above.
   h. Remove disc (part 16 or disc assemblies) from stem by following procedure outlined above.
   i. Install new stem (part 14) and reassemble by reversing above procedure.
4. Replace Stem Bushing: Follow plant procedures for removing valve from service and removing pressure from valve.
   a. Open valve approximately five (5) turns.
   b. With a standard wrench turn bushing (part 4) counterclockwise simultaneously with handwheel (part 3) until bushing is free of bonnet (part 13).
   c. Remove handwheel nut (part 1), identification plate (part 2), and handwheel (part 3).
   d. Turn bushing (part 4) counterclockwise and remove from stem (part 14).
   e. Replace bushing (part 4) and reassemble by reversing above procedure.

NOTE: Whenever a new stem is installed, it is necessary to replace the packing (part 8). When body and bonnet are separated, a new gasket (part 19) should be installed before reassembly.

THREADED CAP SWING CHECK VALVES

OPERATIONAL and REPAIR PROCEDURE

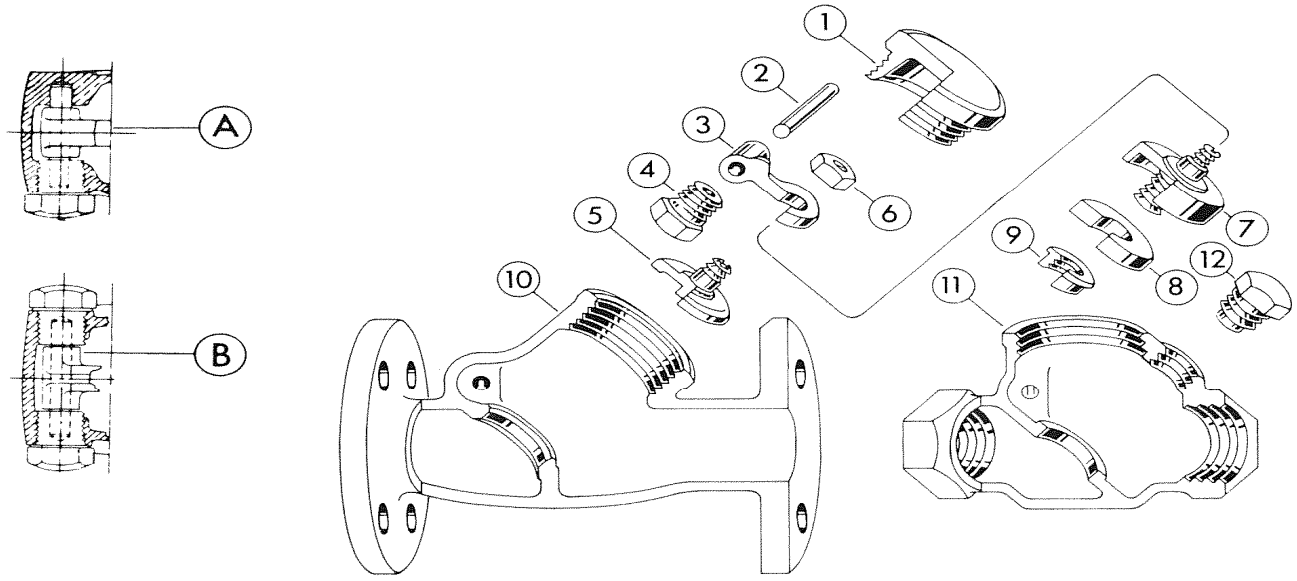

PARTS IDENTIFICATION

1. Cap
2. Carrier Pin
3. Carrier
4. Side Plug
5. Disc
6. Disc Nut
7. Disc Holder
8. Composition Disc
9. Disc Locknut-Composition Disc
10. Body-Flanged End
11. Body-Threaded End
12. Bumper Plug

A. Detail-One Side Plug
B. Detail-Two Side Plugs

OPERATION:
Swing Check Valves must be installed with the pressure under the disc to function properly. These valves are completely automatic and their operation function depends on the fluid flow in the pipe.

INSPECTION:
Periodical inspection and preventative maintenance is not required other than observing for proper functioning.

REPAIR PARTS:
All parts are shown on this page. When ordering repair parts, be sure to give valve figure number, size, and material; if applicable, metal when other than standard.

PROCEDURE FOR REPAIRING: (CAUTION: See note 7 on page 15)

1. Seat Leakage—If valve seat leaks, it will be necessary to replace the disc (part 5 or 8).
   a. Remove cap (part 1) by turning counterclockwise.
   b. Remove side plug or plugs (part 4) and slide carrier pin (part 2) out through hole.
   c. Remove complete disc assembly.

   One-piece disc (part 5). Secure carrier (part 3) and remove disc nut (part 6) by turning counterclockwise. Replace disc (part 5) and reassemble by reversing this procedure.

   Composition disc (part 8). Remove disc locknut (part 9) with wrench, holding disc holder (part 7) by screwdriver slot and rotating counterclockwise. Replace disc (part 8) and reassemble by reversing this procedure.

BOLTED CAP SWING CHECK VALVES

OPERATIONAL and REPAIR PROCEDURE

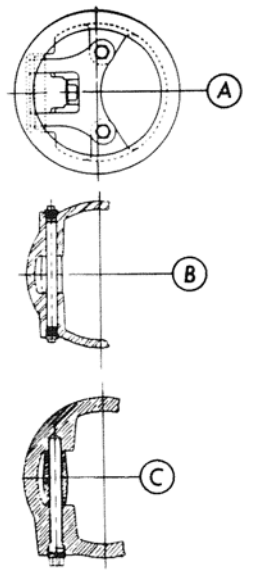

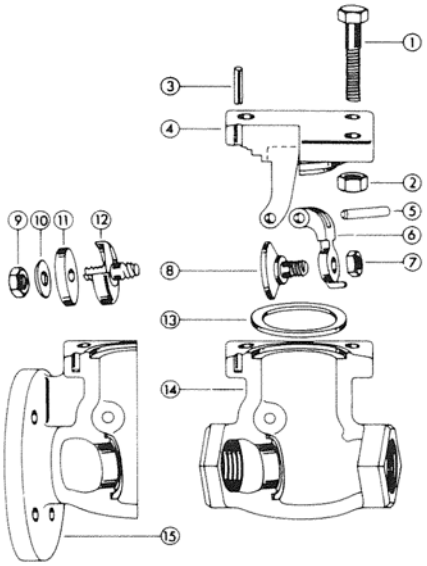

Fig. I

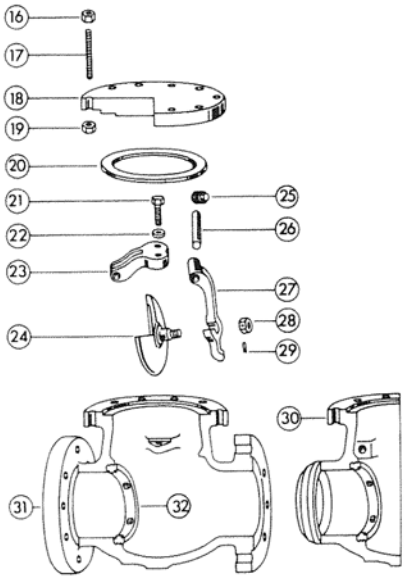

Fig. II

PARTS IDENTIFICATION

1. Cap Bolt
2. Cap Bolt Nut
3. Locating Pin
4. Cap
5. Carrier Pin
6. Carrier
7. Disc Locknut
8. Disc
9. Disc Nut
10. Disc Plate
11. Composition Disc
12. Disc Holder
13. Gasket
14. Body – Threaded Ends
15. Body – Flanged End
16. Body Nut
17. Body Stud
18. Cap
19. Body Nut
20. Gasket
21. Cap Screw
22. Lockwasher
23. Disc Holder Hanger
24. Disc
25. Pipe Plug
26. Disc Holder Pin
27. Disc Holder
28. Disc Nut
29. Disc Nut Pin
30. Body – Welding End
31. Body – Flanged Ends
32. Seat Ring

A. Detail – Hanger Type Disc
B. Detail – Pin Type – Two Side Plugs
C. Detail – Pin Type – One Side Plug

OPERATION:
Swing Check Valves must be installed with the pressure under the disc to function properly

INSPECTION:
Periodical inspection or preventative maintenance is not required other than observing for proper functioning.

REPAIR PARTS:
All parts are shown on this page. When ordering repair parts, be sure to give valve figure number, size and material; if applicable, metal when other than standard.

PROCEDURE FOR REPAIRING (CAUTION: See note 7 on page 15)

1. Seat Leakage – If valve seat leaks, it will be necessary to replace the disc or seat ring.
   a. Remove the cap (part 4 or 18) by removing the nuts (part 2 or 16) from either the body studs (part 17) or body bolts (part 1). Use a wrench and turn in a counterclockwise direction.
   b. For pin type valves, remove side plug (part 25) and slide disc holder pin (part 26) out through hole for side plug.
   c. Assembly of disc (part 24), disc holder (part 27), disc nut (part 28) and disc nut pin (part 29) can now be lifted out of the body through the top.
   d. Remove disc nut pin (part 29), then disc nut (part 28) with a wrench by turning counterclockwise.
   e. Replace disc (part 24) and reassemble by reversing above procedure.
   f. On hanger type valves (Fig. II), the entire disc assembly is attached to ears within the body. Remove cap screws (part 21) and lockwashers (part 22) and lift out entire assembly. Follow same procedures as given in c, d, and e.
   g. On valve cap suspended disc valves (Fig. I), the entire disc assembly is attached to the valve cap. Remove cap bolts nuts (part 2) and lift out entire assembly. Remove disc locknut (part 7 or 9) by turning counterclockwise. Replace disc (part 8 or 11) and reassemble by reversing above procedure. When reassembling valve be sure the locating pin (part 3) is in proper alignment between the valve cap (part 4) and the valve body (part 14 or 15).
   h. Remove seat ring (part 32) if necessary. Remove disc assembly. Use seat ring wrench and insert in the seat ring until lugs engage slots. Turn in counterclockwise direction to remove from body (part 31). Replace seat ring and reassemble valve.

NOTE: When cap and body are separated, new gasket should be installed when reassembling.

UNION and THREADED CAP HORIZONTAL LIFT CHECK VALVES
OPERATIONAL and REPAIR PROCEDURE

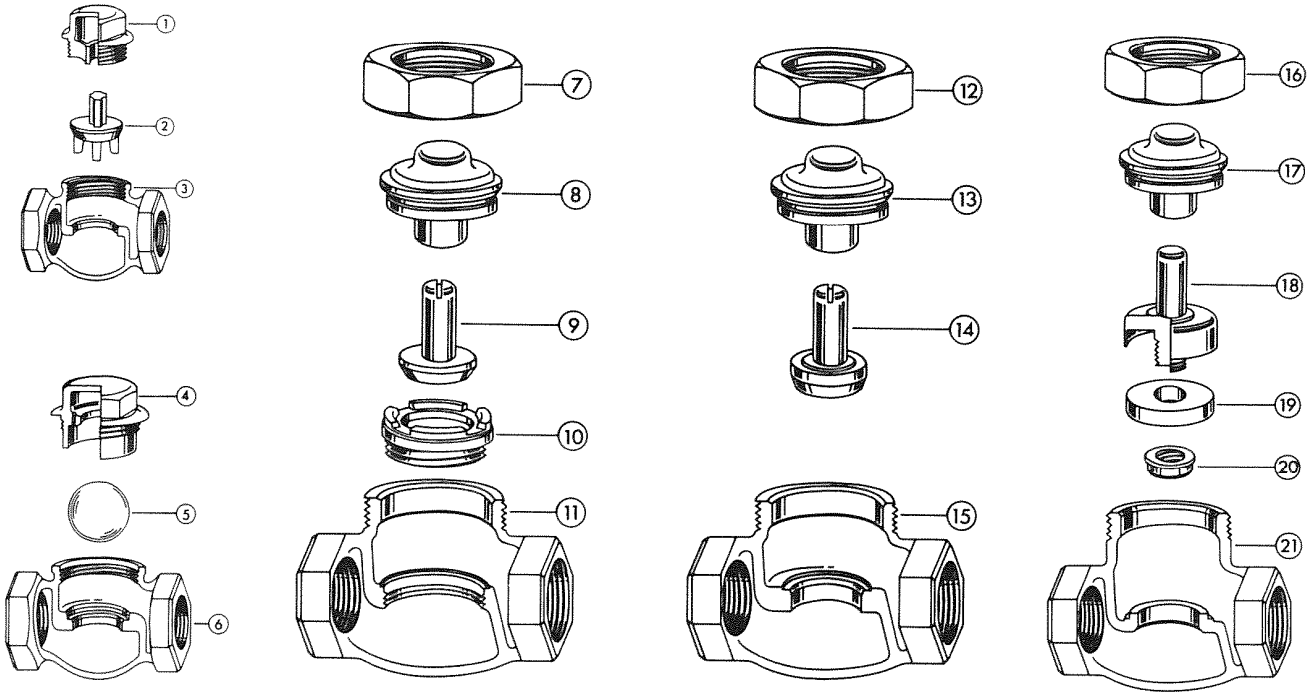

PARTS IDENTIFICATION

1. Cap
2. Disc
3. Body-Threaded Ends
4. Cap
5. Ball
6. Body-Threaded Ends
7. Ring Nut
8. Disc Guide
9. Disc
10. Seat Ring
11. Body-Threaded Ends
12. Ring Nut
13. Disc Guide
14. Disc
15. Body-Threaded Ends
16. Ring Nut
17. Disc Guide
18. Disc Holder
19. Disc-Composition Disc
20. Disc Nut
21. Body-Threaded Ends

OPERATION:
These valves must be installed with the pressure under the disc to function properly. These horizontal lift check valves are completely automatic and their operation depends on the fluid flow in the pipe.

INSPECTION:
Periodical inspection or preventative maintenance is not required other than observing for proper functioning.

REPAIR PARTS:
All parts are shown on this page. When ordering repair parts, be sure to give valve figure number, size and material; if applicable, metal other than standard.

PROCEDURE FOR REPAIRING: (CAUTION: See note 7 on page 15)

1. Seat Leakage—if valve seat leaks, it will be necessary to replace the disc (part 2, 9, or 14) or disc assembly (part 18, 19, or 20); if ball check, refinish seat in body with seating tool; if valve has seat ring, see instruction "c"
   a. Remove cap (part 1 or 4) or ring nut (part 7, 12, or 16) by turning counterclockwise.
   b. Remove complete assembly.
      One-piece disc (part 2, 9, or 14): Slip disc out of disc guide (part 8 or 13) and replace with new disc.
      Composition disc (part 19): Secure disc holder (part 18) in vise and remove disc nut (part 20) by turning counterclockwise. Remove disc (part 19). Replace with new disc.
      Ball disc (part 5): Replace with new.
   c. Remove seat ring (part 10): Remove disc. Use seat wrench and insert in the seat ring until lugs engage slots. Turn in counterclockwise direction to remove from body. Replace with new seat ring.

BOLTED CAP HORIZONTAL LIFT CHECK VALVES

OPERATIONAL and REPAIR PROCEDURE

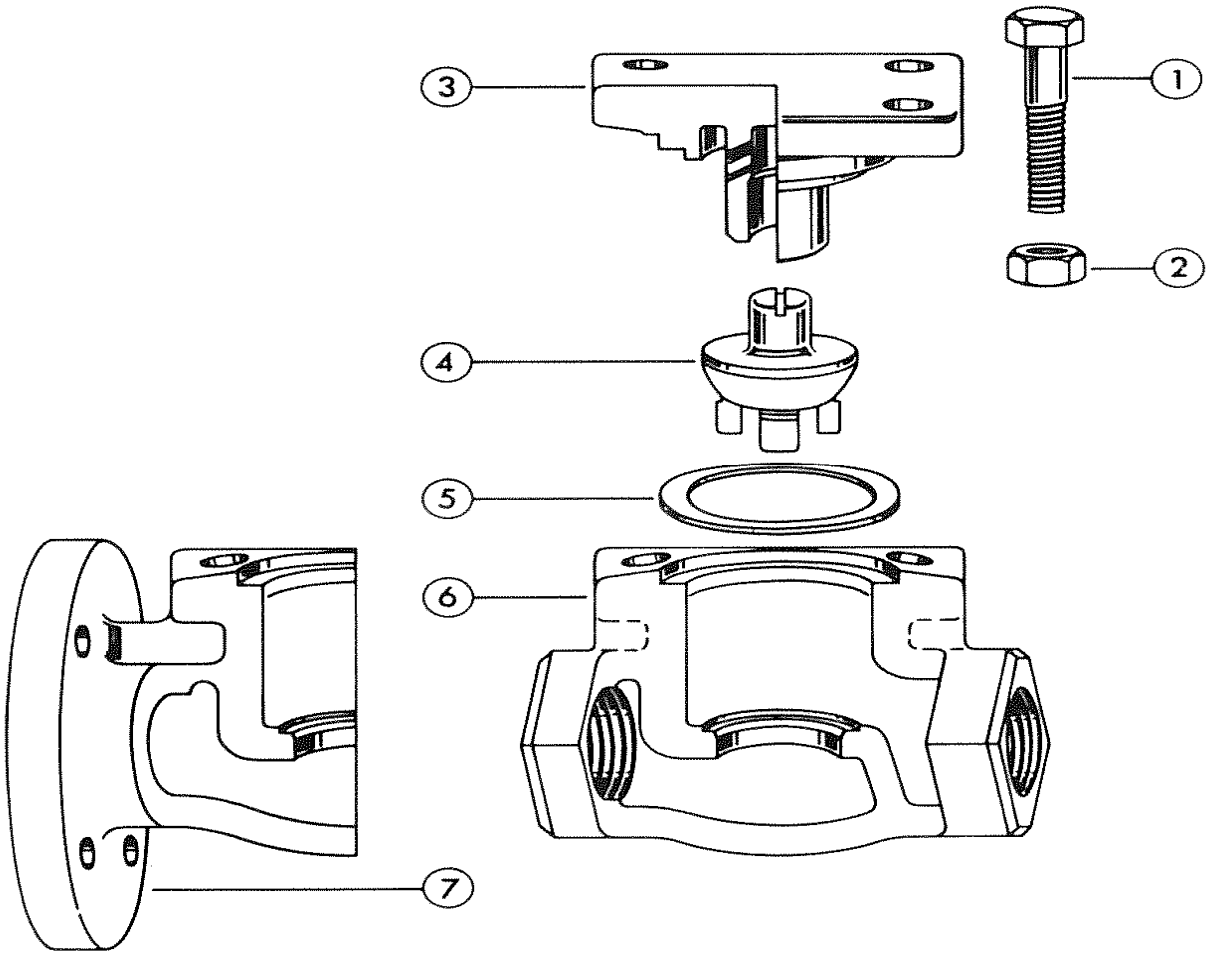

PARTS IDENTIFICATION

1. Cap Bolt
2. Cap Bolt Nut
3. Cap – Bolted
4. Disc
5. Gasket
6. Body – Threaded Ends
7. Body – Flanged Ends

OPERATION:
These valves must be installed with the pressure under the disc to function properly. These horizontal lift check valves are completely automatic and their operation depends on the fluid flow in the pipe.

INSPECTION:
Periodical inspection or preventative maintenance is not required other than observing for proper functioning.

REPAIR PARTS:

All parts are shown on this page. When ordering repair parts, be sure to give valve figure number, size and material; if applicable, metal when other than standard.

PROCEDURE FOR REPAIRING: (CAUTION: See note 7 on page 15)

1. Seat Leakage—If valve seat leaks, it will be necessary to replace the disc (part 4). If valve has integral seat, refinish seat in body with seating tool.
   a. Remove cap (part 3) by removing the nuts (part 2) from the body bolts (part 1). Use wrench and turn in a counterclockwise direction.
   b. Remove disc (part 4) and replace with new disc.

PRESSURE SEAL VALVES

OPERATIONAL and REPAIR PROCEDURE

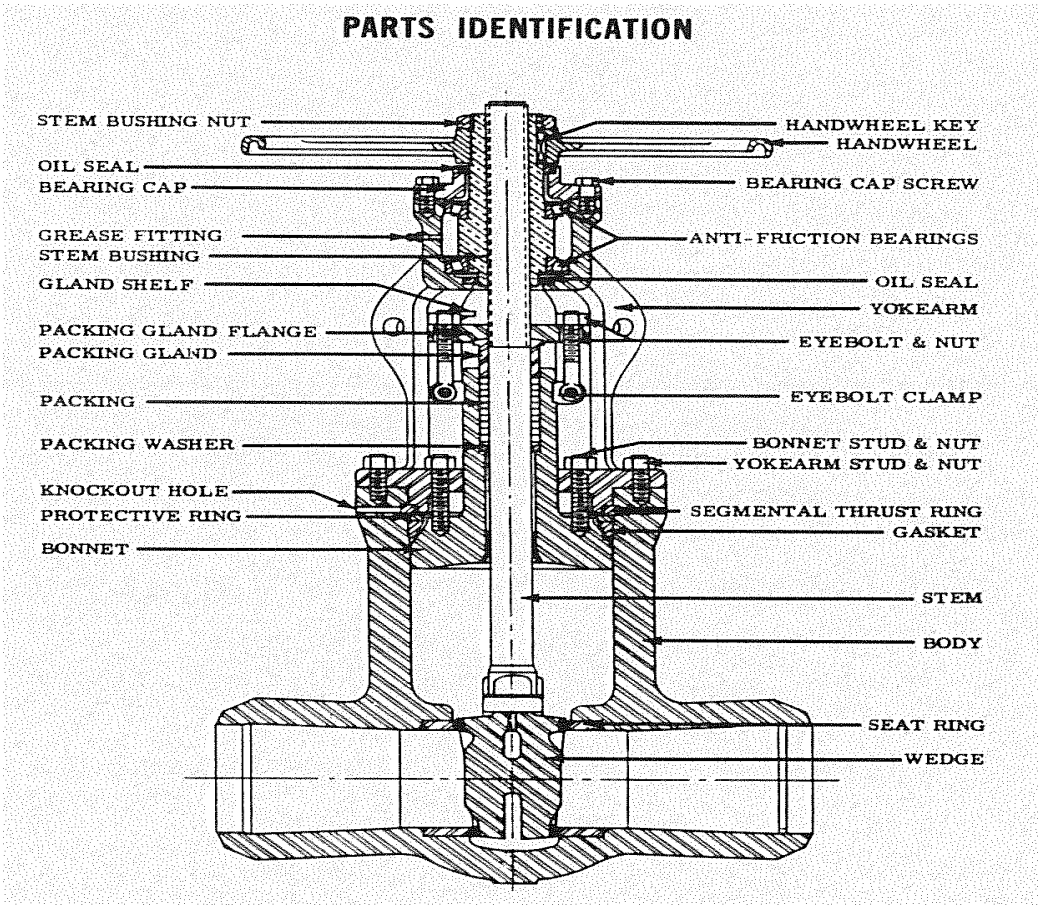

OPERATION AND MAINTENANCE PROCEDURE

(CAUTION: See note 7 on page 15)

1. PACKING LEAKS should be corrected promptly by pulling up on the packing gland. Failure to do this may result in damaged stem or packing and inability to stop the leak until new packing is installed.

2. Powell Pressure Seal Valves have a backseat on the stem, which seats against a stellited backseat in the bonnet when the valve is fully opened. This sea will hold pressure if both surfaces are clean; however, this is difficult to determine, and consequently, packing a valve under pressure is hazardous and not recommended.

3. LUBRICATION of the stem bushing is required periodically. This is accomplished by a grease fitting on the side of the bushing housing, and application of lubricant directly to operating threads. See note 3 page 15 for lubrication recommendations.

4. SECIAL TOOLS are available for the general maintenance of Powell Pressure Seal Valves.
   (a) Torque Wrench
   (b) Laps for Pressure Seal Joint
   (c) Grinder for Pressure Seal Body Seat
   (d) Tools for repairing valve sealing surfaces

5. REPLACEMENT PARTS are seldom necessary when a Powell Pressure Seal Valve is properly installed and maintained. However, it is wise to stock packing for each valve. If a valve is disassembled for any reason a new gasket should be installed.

6. For more complete information on operation and maintenance of Powell Pressure Seal Valves, refer to Powell publication 69-1.

VALVE IDENTIFICATION AND REFERENCE

1. A NAMEPLATE is located on the yokearm of all Pressure Seal Gate and Globe Valves, and on neck of body on all check valves.

2. WHEN ORDERING REPAIR PARTS or REFERRING TO A VALVE for any reason whatsoever, reference should always be made to the serial number located at the bottom right-hand corner of the nameplate. In addition, size and Figure Number located on the nameplate should be included.

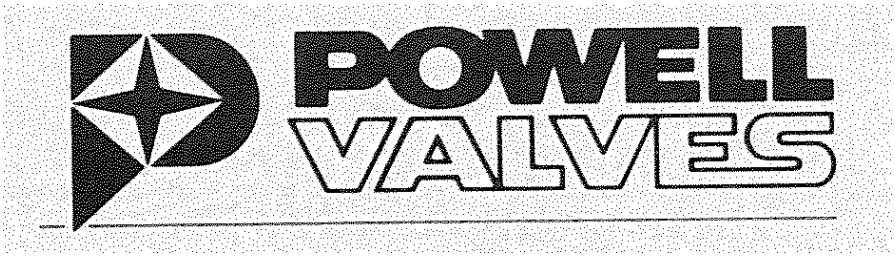

THE WM. POWELL COMPANY
2503 Spring Grove Avenue
Cincinnati, Ohio 45214-1771, USA

Telephone: (513) 852-2000 FAX: (513) 852-2997

DISTRIBUTORS AND STOCKS IN PRINCIPLE CITIES

Form Rev. 12/12

UNITED BRASS WORKS, INC

714 S. Main St.. Randleman, N.C. 27317

Phone: 800/334-3035 Fax: 800/498-4696 www.ubw.com

Model 364 Continuous Blow-Down Needle Valve

Complies with MSS-SP -80-2013



Class 300 • 100% Pressure Tested
Angle Pattern • Threaded Ends
Rising Stem with Swivel Disc Holder
Calibrated "Easy to Read" Gauge with Pointer
Stainless Steel Seat & Disc Hardened to 60 Rockwell "C"
Max Pressure 390 PSI @ 500° F • Max Pressure for Boiler Blow-Down 312 PSI

CRN OCO7135.2C

MATERIAL LIST		
NO.	DESCRIPTION	MATERIAL
1	Body	Bronze
2	Seat Ring	Stainless Steel
3	Valve Meter	Stainless Steel
4	E-Clip	Stainless Steel
5	Meter Nut	Brass
6	Stem	Brass
7	Bonnet	Brass
8	Bonnet Nut	Bronze
9	Packing	NAFG
10	Packing Gland	Brass
11	Gage Collar	Brass
12	Set Screw	Stainless Steel
13	Packing Nut	Brass
14	Gage Collar	Brass
15	Set Screw	Stainless Steel
16	Hand Wheel	Ductile Iron
17	Hex Nut	Stainless

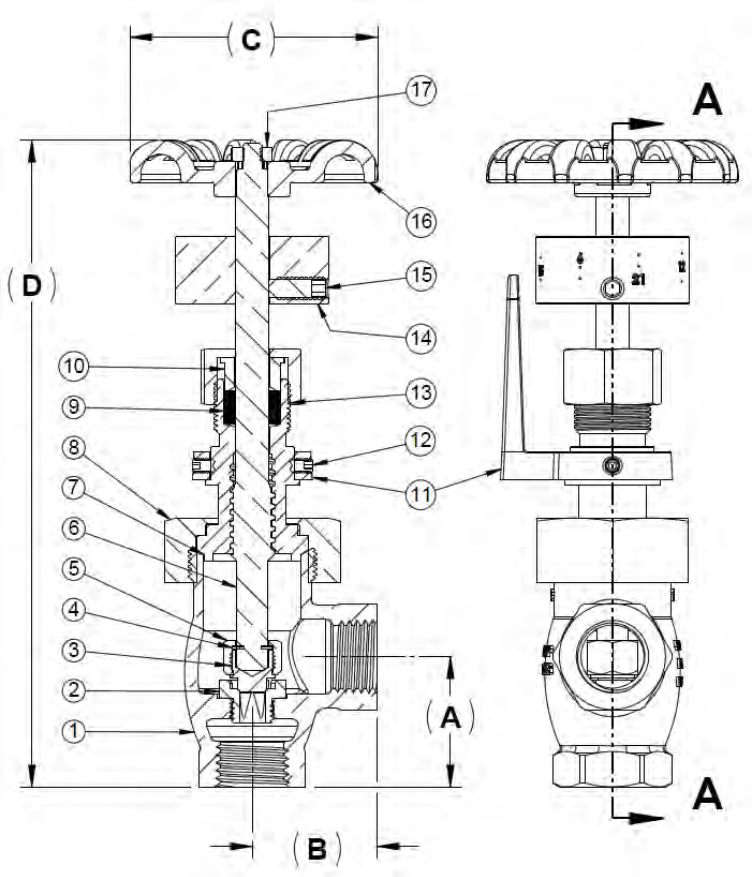

SIZE	A	B	C	D (OPEN)	D (CLOSED)	WGT.
1/2"	1.45	1.40	2.80	7.48	7.10	2.75
3/4"	1.65	1.44	2.80	7.78	8.15	3.50

UNITED BRASS WORKS, INC.

714 S. Main St., Randleman, NC 27317

Tel: 800-334-3035 Fax: 800-498-4696 www.ubw.com

Model 425 Quick Opening Blow-Off Valve

Class 300 * ANSI B 16.34 * 665 psi Working Steam Pressure @ 500 F
750 psi @ 100 F * 100% Pressure Tested * Threaded Ends * Epoxy Coated (E-Coat)
Max Pressure for Boiler Blow Off 530 PSI
CRN OCO7135.2, 24, 25, 26
CRN OEO2171.7, 79, 70, 78, 7AY, 7T, 7N

The United Brass quick opening boiler blow off valve has been designed for the rugged service of boiler treatment and scale. The cast steel knife gate valve conforms to Class 300 of ANSI B16.34 and features a stainless steel seat and disc hardened to Rockwell 60. ASME Boiler and Pressure Vessel Code Section 1 PG-42.1.12 and Power Piping Code ASME B 31.1 Table 126.1 reference steel valves to ANSI B 16.34. The sliding disc provides a "cleaning" action that keeps the seating area clear of scale and debris.

DESCRIPTION	MATERIAL
Body	Steel A216 WCC
Cover	Steel A216 WCC
Gasket	Tanged Graphite
Disc Spring	17-7 Stainless Steel
Disc Rivet	Carbon Steel
Disc	440C Stainless Steel
Arm	Steel A216 WCC
Stem	410 Stainless Steel
Stem Rivet	Carbon Steel
Stem Spring	17-7 Stainless Steel
Packing	Graphite
Packing Nut	410 Stainless Steel
Handle (1" & 1 1/4")	Ductile Iron 65-45-12
Handle (1 1/2" & 2")	Steel A216 WCC
Cotter Pin	Plated Steel
Body Bolts	Steel Grade 8
Hex Nuts	Steel Grade 8
Name Plate	Stainless Steel
Drive Screws	Stainless Steel



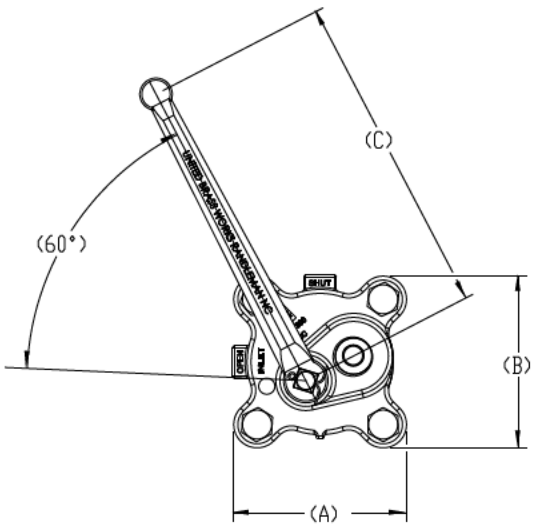

Size	1	1 ¼"	1 ½"	2"
A	5.32	5.32	8.20	10.50
B	5.32	5.32	8.20	10.50
C	10.00	10.00	12.50	18.00
D	60°	60°	60°	60°
Face to Face	3.80	3.80	4.50	4.80
Weight	14.0	14.0	36.0	46.0

UNITED BRASS WORKS, INC.

714 S. Main St. Randleman, N.C. 27317

Tel: 800-334-3035 Fax: 800-498-4696 www.ubw.com



Model 226UT "Y" Blow-Off Valve

Complies with MSS-SP-80-2013

CRN OCO7135.2

200 WSP @ 406° Max • 400 WOG

Non-Shock Service • 100% Pressure Tested

Threaded Ends • Rising Stem • Swivel Disc Holder

PTFE Disc • Integral Seat •

Contains Lead. Not Intended for Use in Potable Water Systems

Care must be taken in blow down piping so that no water hammer effect causes shock to the "Y" blow down valve, especially in cases where a boiler has two blow down lines. In such cases both lines should be piped to a common set of blow down valves or each blow off line should be piped separately to the blow down separator. Excessive water hammer or shock can destroy valves and piping and could cause injury.

MATERIAL LIST

NO.	DESCRIPTION	MATERIAL
1	Jam Nut	Steel
2	Hand Wheel	Ductile Iron
3	Stem	Naval Brass
4	Packing Nut	Brass
5	Packing Gland	Brass
6	Packing	NAFG
7	Bonnet	Bronze
8	Bonnet Nut	Bronze
9	Lock Nut	Brass
10	Disc Holder	Brass
11	Body	Bronze
12	Marker Disc	Aluminum

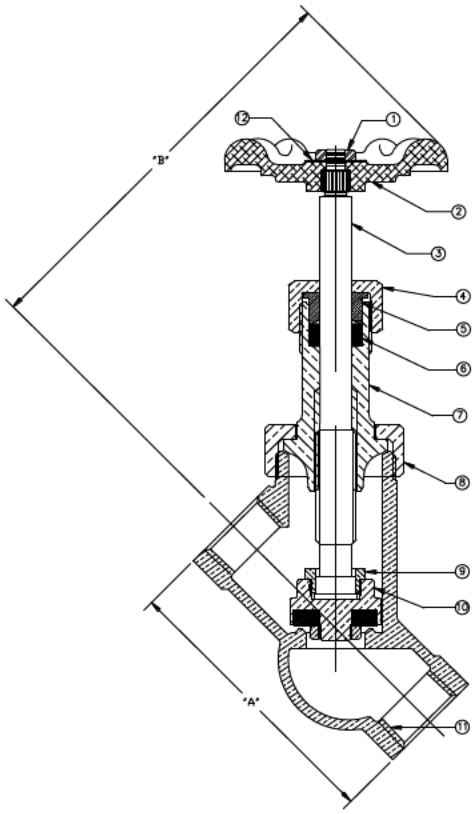

Size	1"	1 ¼"	1 ½"	2"
A	4.75	5.56	6.25	7.75
B	5.75	7.00	7.75	8.75
Ship Wt. (lbs.)	4.20	6.10	9.00	15.00
Qty. Unit Pack	4	4	2	2

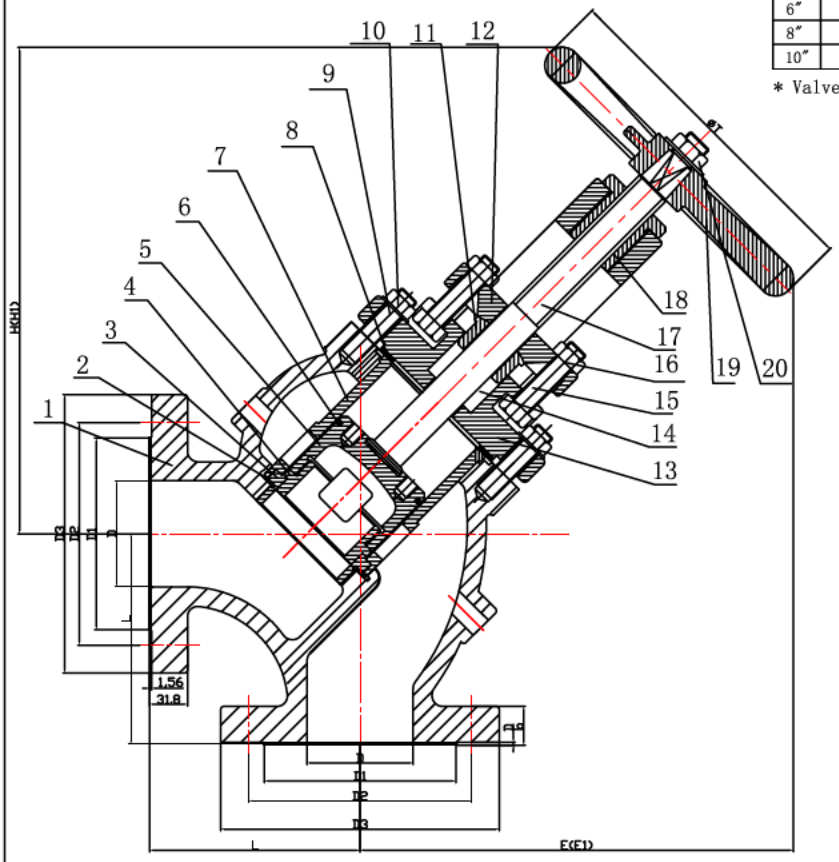

Size	D	D1	D2	D3	L	b	D	N-ΦC	H	H1*	E	E1*	T
2.5"	2.5	4 15/16	5 7/8	7 1/2	5 3/4	1	1/16	8-Φ7/8	12.75	13.87	11.73	12.85	10
3"	3	5 11/16	6 5/8	8 1/4	6 1/4	1 1/8	1/16	8-Φ7/8	14.65	16	13	14.37	10
4"	4	6 5/16	7 7/8	10	7	1 1/4	1/16	8-Φ7/8	16.3	18	14	15.71	10 4/5
5"	5	8 5/16	9 1/4	11	8	1 3/8	1/16	8-Φ7/8	19.25	21.35	16.57	18.67	14
6"	6	9 11/16	10 5/8	12 1/2	8 3/4	1 7/16	1/16	12-Φ7/8	22.28	24.76	19.45	21.93	17 3/4
8"	8	11 15/16	13	15	10 1/2	1 5/8	1/16	12-Φ1	29.17	32.79	24.64	28.26	20
10"	10	14 1/16	15 1/4	17 1/2	12 1/4	1 7/8	1/16	16-Φ1 1/8					20

* Valve Open

NO.	Part Name	Quantity	Material	Material Standard
1	Body	1	Cast Iron	ASTM A 395
2	Body Seat Gasket	1	Graphite	
3	Body Seat Ring	1	Cast Bronze	ASTM B 62
4	Disc Seal	1	Cast Bronze	ASTM B 62
5	Disc	1	Cast Iron	ASTM A 395
6	Piston Ring	1	Cast Iron	SPRING STEEL
7	Guide Bush	1	Cast Iron	ASTM A 395
8	Body Gasket	1	Graphite	
9	Bolts		Steel	ASTM A 193 B7
10	Nuts		Steel	ASTM A 194 2H
11	Packing Gland	1	Cast Brass	ASTM B 62
12	Gland Follower	1	Cast Iron	ASTM A 395
13	Bonnet	1	Cast Iron	ASTM A 395
14	Packing		Graphite	
15	Bolts		Steel	ASTM A 193 B7
16	Nuts		Steel	ASTM A 194 2H
17	Stem	1	SS410	
18	Stem Nut	1	Cast Brass	ASTM B62
19	Handwheel	1	Cast Iron	ASTM A 126 B
20	Nut	1	Steel	ASTM A 194 2H
STEAMCO				

STEAMCO 250ANR

AS BUILT BURNER SPECIFICATION SHEET

Contact SW/AM **02/01/2021**

JOB DETAILS

Number	J0120197	**Order Number**	B0081346 - 1	**Quantity**	1
Customer	WICHITA BURNER			**Purchase Order**	JTHEQ1-0017730
Name	AMERICAN BOILER				

BURNER DETAILS

Model	CM10B-GO-30	**Serial Number(s)**	122082650	**Label**	B67598597
Mode Of Operation	MODODP			**Code**	UL,CSD-1,NFPA-85

HEAT EXCHANGER AND SITE DETAILS

Make	Superior			**Model**	650hp
Type	SCOTCH MARINE	**Combustion Chamber Press.**	3.0	**Site Altitude**	2000

PRIMARY GAS DETAILS (ALL PRESSURES ARE IN INCHES WC)

High Fire Manif. Press.	17.8	**High Fire Rate**	27300 MBH	**Side Orifice Size**	None		
Gas Reg. Outlet Press.	74.6	**Site Press.**	140.0 - 280.0	**Type**	Natural	**Pilot**	Natural
Min. Supply Press.	123.2	**Max. Design Press.**	280.0	**Gas Group**	4D		

SECONDARY GAS DETAILS (ALL PRESSURES ARE IN INCHES WC)

High Fire Manif. Press.		**High Fire Rate**	MBH	**Side Orifice Size**	
Gas Reg. Outlet Press.		**Site Press.**	-	**Type**	
Min. Supply Press.		**Max. Design Press.**			

OIL DETAILS (ALL PRESSURES ARE IN PSI)

Pump Pressure	62.8	**High Fire Rate**	195.0 GPH	**Oil Group**	4D
Compressor Pressure	52.8	**Type**	#2	**Grade**	#2

DIAGRAMS

Wiring	GO-J120197-1	**General Arrangement**	
Gas Piping	PDG-J120197	**Additional 1**	
Oil Piping	PDO-J120197	**Additional 2**	
Remote Panel		**Additional 3**	

ELECTRICAL CHARACTERISTICS

Control	115V/1PH/60HZ	**FLA**	6.0
Blower Motor	460V/3PH/60HZ	**FLA**	17.5
Remote Pump	460V/3PH/60HZ	**FLA**	1.15
Compressor	460V/3PH/60HZ	**FLA**	9.7
Clipped Circuit Board Part Number		**Min. Circuit Ampacity**	38.2

BURNER SETTINGS AND MISC.

Gas Ignition System	GAS PILOT	**Gas Inlet Location**		**Flame Detection**	SCANNER
Oil Ignition System	GAS PILOT	**Flange Setting**		**Diffuser Blade Setting**	

COMMENTS (MAY CONTINUE ON NEXT PAGE)

[1]Approximate operating pressure at the manifold inlet for initial start-up. Final pressure should be determined after checking actual flow with gas meter. Stack temperature, CO, CO_2, O_2, and furnace pressure will help in determining actual input when gas meter is not available for this unit.

[2]All components are rated for the maximum design pressure specified. That pressure must not be exceeded.

BILL OF MATERIAL

As-Built

Customer: WICHITA BURNER - 101373 **Purchase Order: JTHEQ1-0017730**

Job Number: J000120197 - 0 **Item: CM10B-GO-30** **Qty: 1** **Order Number: B000081346 - 1**

PFI Part No.	U\M	Qty.	Material Description	Ship Loose
004660	FT	1.33	LD-500-1 LOW DENSITY 1/2 INCH 1000 DEGREE FIBERGLASS BRAIDED ROPE P/N 21032	
050163	EA	1.00	3/4 HP 1725RPM 208/230/460/3 ODP 56C FRAME, CAT. .7518OT3E56C-S WEG MOTOR	
056150	EA	1.00	15 HP 3525 RPM 208/230/460/3 ODP 215T FR BM EM3314T HIGH EFFICIENCY MOTOR	
060420	EA	1.00	M9194C-1005 HONEYWELL MODUTROL MOTOR FIXED 90 DEGREE STROKE 300 INCH LB.	
061230	EA	1.00	4074 EDC HONEYWELL RESISTOR PACK FOR M954,M955,M974,M975 MOD MOTORS	
090526	EA	1.00	182 100% CHICAGO DESIGN 62 3500 RPM CW BLOWER AIR FOIL FAN WITH 1-3/8" BORE 62-0-0057	
101030	EA	1.00	59B-R (SG-0514X) NOZZLE RATE 240 GPH @ 300 PSI 1725 RPM WEBSTER PUMP,VITON SEAL	
102350	EA	1.00	ALUMINUM REMOTE FUEL UNIT STAND DWG. 218M-3	
102360	EA	1.00	ALUMINUM CAST REMOTE PUMP MOTOR ADAPTOR DWG. C-235SC-4	
102850	EA	1.00	RV3002 WEBSTER REGULATING VALVE 200 PSI 50-220 RANGE SET @ 100 PSI, 3/4-14 NPTF INLET & OUTLET	
121150	EA	1.00	ALO90 LOVEJOY PUMP COUPLING 5/8 X 1/2 WITH KEYWAY (68514445149)	
140020	EA	1.00	7990K10 4PDT CUTLER HAMMER GAS-OIL FUEL CHANGE-OVER SWITCH POSITIVE CENTER OFF	
140700	EA	1.00	CRTP1A9M9 OSLO SPST ROCKER SWITCH	
140720	EA	1.00	CRTP22A-9M9 OSLO DPDT NO CENTER OFF ROCKER SWITCH	
140740	EA	1.00	SPM1X399M9E OSLO N.O. MOMENTARY PUSHBUTTON SWITCH	
151604	EA	1.00	B428VXFM30IW 30" H2O ASHCROFT HIGH GAS PRESSURE SWITCH, MANUAL RESET	
151613	EA	1.00	B429VXFM-60 ASHCROFT LOW GAS PRESSURE SWITCH, MANUAL RESET	
171101	EA	1.00	RFS-4001-110 CLEVELAND CONTROLS AIR SWITCH W/ COMPRESSION FITTINGS, .17-20", FLANGE MTG.	
195930	EA	1.00	VKG10.100U 4" FULL PORT BUTTERFLY VALVE, 15 PSI, UL APPROVED, NPT THREAD	
197461	EA	2.00	V710LBSV22 3 INCH ASCO VALVE BODY STD. GUIDE & PROOF OF CLOSURE	
199502	EA	2.00	AH2E212S4 ON-OFF 14 SECOND 120/60, 110/50 PROOF OF CLOSURE ASCO ACTUATOR	
202650	EA	2.00	8040H8 3/8 INCH 15 PSI NEMA 4 120 VOLT 50/60 HZ. ASCO PILOT VALVE	
210210	EA	1.00	S302GF02V2AC9 N.O. 3/32 PORT 1/8 PIPE 115V. 150 PSI G.C. VALVE	

BILL OF MATERIAL

As-Built

Customer: WICHITA BURNER - 101373 **Purchase Order: JTHEQ1-0017730**

Job Number: J000120197 - 0 **Item: CM10B-GO-30** **Qty: 1** **Order Number: B000081346 - 1**

PFI Part No.	U\M	Qty.	Material Description	Ship Loose
211550	EA	2.00	VOG15.011U1(10) 2-3 WAY SIEMENS 3/4" OIL SHUT VALVE WITH PROOF OF CLOSURE SWITCH & ADJUSTABLE AUX. SWITCH, WITH 1/2 INCH HARDWARE KIT 120V 50/60 HZ.	
234120	EA	1.00	3/4 INCH 509T MILWAUKEE SWING CHECK VALVE WITH TEFLON DISC	
262200	EA	1.00	B-1/2-24-W HAUCK MODULATING OIL VALVE P/N HK12519	
262511	EA	1.00	HAUCK "B" SERIES METERING VALVE ADAPTER WITH INDICATOR	
284600	EA	1.00	S262SH02N3GJ7 1-1/4 INCH N.O. VENT VALVE 1,710,000 BTU 1 INCH PD 120V 18.5 WATTS	
302600	EA	1.00	220G 3 INCH MAXITROL REGULATOR WITH K 1-3 PSI SPRING	
302801	EA	1.00	325-3 3/8 INCH MAXITROL REGULATOR WITH R325C 10-22 RED SPRING	
320001	EA	1.00	1092-PF-G 6000 VOLT 50/60 HZ. ALLANSON GAS IGNITION TRANSFORMER WITH GROUND WIRE	
333011	EA	1.00	B500-0571-5F 500VA 480/240/208 TO 120 50/60 HZ. MICRON STEPDOWN TRANSFORMER WITH FUSE BLOCK: WILL NOT FIT INTO JUNCTION BOX PN: X09972	
351590	EA	1.00	3/8 INCH T58570SSC NIBCO OR 77C14227A APOLLO FULL PORT BRONZE BALL VALVE WITH LOCKING HANDLE	
351620	EA	1.00	1-1/4 INCH T5857066SSL NIBCO OR APOLLO 77C14627A FULL PORT BRONZE BALL VALVE WITH LOCKING HANDLE	
397522	EA	1.00	RM7840L-2075/U HONEYWELL AUTOMATIC PROGRAMMING CONTROL WITHOUT DISPLAY 50/60 HZ	
400930	EA	1.00	Q7800B-2003/U HONEYWELL UNIVERSAL WIRING	
402901	EA	1.00	136733 H.W. HEAT INSULATOR BLOCK FOR C7027 (1/2" NPT)	L
402901	EA	1.00	136733 H.W. HEAT INSULATOR BLOCK FOR C7027 (1/2" NPT)	
403465	EA	1.00	C7927A-1016 HONEYWELL SOLID STATE UV FLAME DETECTOR, 8' LEADS	
406990	EA	1.00	R7851B-1000 HONEYWELL DYNAMIC AMPLI-CHECK SOLID STATE AMPLIFIER 2-3 SECOND FFRT	
407710	EA	1.00	ST7800A-1039 HONEYWELL 30 SECOND PURGE TIMER	
432880	EA	1.00	L404V-1087 HONEYWELL OIL PRESSURE SWITCH 10-150 PSI SPST	
432892	EA	1.00	L404F-1383 10-150 PSI, AUTO RECYCLE H.W. PRESSURETROL	
463100	EA	1.00	0-20 0Z. 0-35 INCH 2-1/2 INCH DIAL 1/4 INCH LM CONNECTION WINTERS GAUGE PLP301 OR 161972A AMETEK US GAUGE	

BILL OF MATERIAL

As-Built

Customer: WICHITA BURNER - 101373 **Purchase Order: JTHEQ1-0017730**

Job Number: J000120197 - 0 **Item: CM10B-GO-30** **Qty: 1** **Order Number: B000081346 - 1**

PFI Part No.	U\M	Qty.	Material Description	Ship Loose
463100	EA	1.00	0-20 0Z. 0-35 INCH 2-1/2 INCH DIAL 1/4 INCH LM CONNECTION WINTERS GAUGE PLP301 OR 161972A AMETEK US GAUGE	
464250	EA	1.00	0-5 PSI. 2-1/2 INCH DIAL 1/4 INCH LOWER MOUNT WIKA GAUGE 611.10, OR P2LP12L005 PRECISION INSTRUMENTS	
465330	EA	2.00	0-100 PSI 2-1/2 INCH DIAL 1/4 INCH LOWER MOUNT WINTERS LIQUID FILLED GAUGE Q804	
480200	EA	1.00	RV4NAYSD-151A PRECISION ELECTRONIC POTENTIOMETER	
480560	EA	1.00	MPKES90B1/4 APEM POTENTIOMETER KNOB 679-3545-ND	
534610	EA	1.00	O RING, 2" O.D. X 1.875 I.D., BUNA N, 9452K119 (PACKAGED 100 PER PACKAGE)	
538001	EA	1.00	P/F AIR ATOMIZING NOZZLE, 300-80, DWG. 90L352C-7	
555070	EA	1.00	CT-ERD.12 1SVR500100R0000 0.1 SECOND TO 100 HOUR DELAY ON MAKE ADJUSTABLE DIN RAIL MOUNTABLE ABB TIMER	
555500	EA	3.00	55.33.8.120.0000 FINDER OR PT320615 SCHRACK 3PDT RELAY	
555510	EA	3.00	94.73SMA FINDER OR PT78730 SCHRACK SOCKET FOR 3PDT AND 55 SERIES RELAYS	
577041	EA	1.00	STARTER 1.5/2/3/5HP 1.1-1.6A 120V COIL, SIEMENS 3RT2015-1AK61 & 3RU2116-1ABO	
577496	EA	1.00	STARTER 3/5/10/10 HP 9-12.5A 120V COIL,1NO/1NC AUX. SIEMENS 3RT2018-1AK61 & 3RU2116-1KBO	
577553	EA	1.00	STARTER 10/10/25/25HP 6-25A, 120V COIL, SIEMENS 3RT2028-1AK60 & 3RB3026-2QB0	
610400	EA	1.00	SLU-35 ILSCO GROUNDING LUG	
612010	EA	28.00	019904225 ENTRELEC D6/8.ADO 14-16 GAUGE ADO, SCREW TERMINAL,BLOCK	
612130	EA	1.00	0199075.26 ENTRELEC D6/8.ADO 14-16 GAUGE AQO,TERMINAL RED (GAS VALVE)	
612200	EA	5.00	11511811 ENTRELEC M6/8 8MM TERMINAL BLOCK 50 AMP 8-22 GA. SCREW	
612202	EA	1.00	1SNA400186R2100 M6/8 ENTRELEC RED TERMINAL BLOCK	
633400	EA	1.00	SC110N-R PANEL MOUNT MALLORY BUZZER 110 VOLT 50/60 HZ. OR MC-09-201-SR FLOYD BUZZER	
659700	EA	1.00	SIEMENS 22MM AMBER LIGHT, 3SU1103-6AA00-1AA0	
659701	EA	1.00	SIEMENS 22MM GREEN LIGHT, 3SU1103-6AA40-1AA0	
659702	EA	1.00	SIEMENS 22MM RED LIGHT, 3SU1103-6AA20-1AA0	
659703	EA	1.00	SIEMENS 22MM BLUE LIGHT, 3SU1103-6AA50-1AA0	
659704	EA	1.00	SIEMENS 22MM WHITE LIGHT, 3SU1103-6AA60-1AA0	

BILL OF MATERIAL

As-Built

Customer: WICHITA BURNER - 101373 **Purchase Order: JTHEQ1-0017730**

Job Number: J000120197 - 0 **Item: CM10B-GO-30** **Qty: 1** **Order Number: B000081346 - 1**

PFI Part No.	U\M	Qty.	Material Description	Ship Loose
731000	EA	1.00	TYPE YS12-CI 3/8 INCH TITAN OR NO. 11-M MUELLER Y STRAINER WITH 100 MESH S.S. SCREEN	
731200	EA	1.00	TYPE YS12-CI 3/4 INCH TITAN OR NO. 11-M MUELLER OR TYPE B KECKLEY Y STRAINER WITH 100 MESH S.S. SCREEN	
731751	EA	1.00	TYPE B 3 INCH KECKLEY OR NO. 11-M MUELLER Y 3 INCH TYPE B KECKLEY Y STRAINER WITH PLUG	
800045	EA	3.00	CMAX LINKAGE ROD BLOCK, 0.377 HOLE, DWG. 45B258C	
879060	EA	1.00	1/4 INCH STANDARD BLACK SQUARE HEAD PIPE PLUG	
910490	IN	24.00	MCCC39201 BLACK PVC WIDE FLEXIBLE TRIM	
910500	EA	2.00	13ZN-01 SIERRA PACIFIC UNIVERSAL CABINET LATCH	
910770	FT	5.00	3/8 INCH O.D. X .035 3003-0 ALUMINUM TUBE (5 FT. LENGTHS)	L
910850	EA	1.00	1IN. X 15IN. STAINLESS STEEL FLEX HOSE 1IN. MALE PIPE BOTH ENDS	L
912794	EA	1.00	CM9/15 REQ. REFRACTORY DIMENSIONS TAG PER DRAWING M380MC-7	
925020	EA	1.00	ATMR6 6 AMP 600V. CLASS CC NON-MOTOR RATED FERRAZ SHAWMUT FUSE	
926130	EA	2.00	ATDR-2.8 2.8 AMP FERRAZ SHAWMUT LOW PEAK DUAL ELEMENT TIME DELAY FUSE	
980031	EA	3.00	1/4 INCH BALL VALVE WITH TEE HANDLE S95B46	
980031	EA	4.00	1/4 INCH BALL VALVE WITH TEE HANDLE S95B46	
980402	EA	1.00	3/8" S95C41 BALL VALVE LONG HANDLED	
985400	EA	1.00	1 INCH MODEL 70101-300 COMBU FUEL OIL FILTER (Max pressure 30 PSI)	L
A28349	EA	1.00	24" PANEL TOP (4) RECT., (5) 22MM, POT. & C/O "16"	
B12101	EA	14.00	CM10B/C 3/8 X 3-1/2 GAS JET W/ ORF	
B12151	EA	4.00	CM10B-11 ROPE RETENTION BRKT	
B13009	EA	1.00	CM10B/C ACCESS COVER PLATE "2014"	
B14037	EA	1.00	CM9-14 SIGHT GLASS COVER PLATE	
B14300	EA	1.00	CM10 DAMPER BACK PLATE	
B14301	EA	1.00	CM10 DAMPER FRONT PLATE	
B14302	EA	1.00	CM10 DAMPER TOP WRAP	
B14309	EA	1.00	CM10 DAMPER RT SIDE ANGLE	
B14310	EA	1.00	CM10 DAMPER LEFT SIDE ANGLE	
B14311	EA	1.00	CM10 DAMPER FRONT ANGLE	
B14312	EA	2.00	CM10 DAMPER BLADE SEAL	
B14313	EA	1.00	CM10 DAMPER SCREEN	

BILL OF MATERIAL

As-Built

Customer: WICHITA BURNER - 101373 **Purchase Order: JTHEQ1-0017730**

Job Number: J000120197 - 0 **Item: CM10B-GO-30** **Qty: 1** **Order Number: B000081346 - 1**

PFI Part No.	U\M	Qty.	Material Description	Ship Loose
B14314	EA	1.00	CM10 DAMPER BASE BACK ANGLE	
B14315	EA	1.00	CM10 8" IFGR BLANKING FLANGE	
B14335	EA	1.00	CM MOD MOTOR BRACKET	
B14367	EA	2.00	CM10 DAMPER SHORT AXLE "06"	
B14368	EA	1.00	CM10 DAMPER LONG AXLE "06" 1/2"DIA	
B14750	EA	1.00	CM10-10B 182 72% AIR INLET ALTERED	
B14903	EA	1.00	3/8-24 ALL THRD DPR CROSS LINK ROD 2.969	
B14904	EA	1.00	3/8-24 ALL THRD DPR CROSS LINK 2.537"	
B19114	EA	2.00	CM10-CM10C RD TOP DAMPER SIDE "14"	
B20600	EA	1.00	CM10 AIR HOUSING WELD ASSEMBLY	
B20651	EA	1.00	CM10 .734" DISHED MOTOR PLATE 215T FR ASSEMBLY	
B20750	EA	1.00	CM9-CM10C 6.625" DIFF WELD ASSY	
B20751	EA	1.00	CM NOZZLE ADAPTOR WELD ASSEMBLY	
B20818	EA	3.00	CM10 DPR AIR FOIL BLADE ASSY"06"	
B22040	EA	1.00	CM10B/C BLAST TUBE AS EXTERNAL ADJ"2014	
B30000	EA	1.00	CM10B/C OIL GUN ASSEMBLY	

BILL OF MATERIAL

As-Built

Customer: WICHITA BURNER - 101373 **Purchase Order: JTHEQ1-0017730**

Job Number: J000120197 - 0 **Item: CM10B-GO-30** **Qty: 1** **Order Number: B000081346 - 1**

PFI Part No.	U\M	Qty.	Material Description	Ship Loose
B30000 Components		**Description**		
538100			P/F OIL NOZZLE ADAPTER, 3/8" NPT THREADS	
538101			P/F ATOMIZING NOZZLE TIP CAP	
831000			3/8 X 3/8 TUBING TO MALE PIPE 90DEG.	
862400			3/8 X 1-1/2 SCHEDULE 40 STANDARD BLACK P	
862763			3/8 X 7 SCHEDULE 40 STANDARD BLACK PIPE	
862764			3/8 X 8 SCHEDULE 40 STANDARD BLACK PIPE	
878100			3/8 STANDARD BLACK GROUND JOINT MALLEABL	
B20701			CM10 GUN ADJ PLATE ASSY	
F36050			CM PILOT ASSY	
	F36050 Components		**Description**	
	800033		C10 ELECTRODE CLAMP PAIR PER DRAWING	
	861800		1/4 X 4 SCHEDULE 40 STANDARD BLACK PIPE	
	F10702		3/8"x3/8" LOCK COLLAR ASSY	
	F10703		CM PILOT ORF 1/8" HEX PLUG DRILLED 5/32	
	F20250		CM PILOT HEAD WELD ASSY	
	X02071		3/8 X 1/4 STD BLK BELL RED COUP	
	X02678		3/8 X 1/4 STRAIGHT COMPRESSION CONNECTOR	
	X04222		90L252C C7/8 IGNITION ELECTRODE	
M12019			3/8 X 8.5 STD BLK PIPE NIPPLE	
M12024			3/8 X 10 PIPE NIPPLE	
X03005			3/8 BLK 90 DEG PIPE ELBOW	
X09196			ALUMINUM WASHER, 1.375 X 1.130 X .063	
B30140	EA	1.00	LE-7 ATLAS COPCO COMPRESSOR ASSY 7.5HP 056030 motor	L

BILL OF MATERIAL

As-Built

Customer: WICHITA BURNER - 101373 **Purchase Order: JTHEQ1-0017730**

Job Number: J000120197 - 0 **Item: CM10B-GO-30** **Qty: 1** **Order Number: B000081346 - 1**

PFI Part No.	U\M	Qty.	Material Description	Ship Loose
B30140 Components		**Description**		
056030		7-1/2 HP 1760 RPM 230/460/3 ODP 213T FR.		
121171		L100 LOVEJOY COUPLING BODY, 1-3/8" BORE,		
121172		L100 LOVEJOY COUPLING BODY, 35MM, 1CXY7		
121181		L099-100H HYTREL COUPLING INSERT		
234605		3/8" BRASS ELBOW NEEDLE VALVE TV45-66		
465300		0-160 PSI LIQUID FILLED 2-1/2 INCH DIAL		
751472		1503234800 CONNECTION FOR LE40-10 ATLAS		
751473		0653909800 FLAT GASKET FOR CONNECTION L		
751474		0686371602 HEXAGON PLUG FOR CONNECTION		
751480		LE7-10 8115-4600-19 ATLAS COPCO		
751680		112C-2-150 1/4"KINGSTON RELIEF VALVE SET		
862400		3/8 X 1-1/2 SCHEDULE 40 STANDARD BLACK P		
863560		1/2 X 6 SCHED. 40 STD. BLK. PIPE NIPPLE		
867160		1 X 1/2 STD. BLACK MALLEABLE IRON BELL		
870350		3/8 STD. BLACK MALLEABLE IRON THREADED		
873150		1/2 STANDARD BLACK MALLEABLE IRON BANDED		
A25954		LE-7 COMPRESSOR MOUNTING BASE		
M10200		LE-7 COMPRESSOR COUPLING GUARD		
X02070		1/2 X 3/8 STD BLK HEX BUSHING		
X02078		3/8 X 1/4 STD BLK HEX BUSHING		
X02172		1/2 X 1-1/2 SCH 40 BLK NIPPLE		
X09020		4450K3 3/8" MUFFLER/FILTER		
X09412		3/8-16 X 1-1/2 HEX HD CAP SCREW		
X09658		3/8 MED. SPLIT LOCK WASHER		
C13180	EA	1.00	REMOTE PUMP STAND	
C13186	EA	1.00	REMOTE PUMP STAND COVER PLATE	
E10664	EA	2.00	CMAX 24" HI PNL BOX BRKT EXT.4.718" "17"	
E21001	EA	1.00	6 X 8 X 4 HOFFMAN WITH 1/2" COUPLING	
E24211	EA	1.00	24 X 24 PANEL BOX ASSEMBLY "16"	
E24621	EA	1.00	24 x 24 DOOR ASSY "17"	
E80414	EA	1.00	24 x 24 CHASSIS "16"	
M10591	EA	2.00	SIEMENS PROOF OF CLOSURE OIL VALVE GUARD	
M10604	EA	2.00	CMAX PROOF OF CLOSURE OIL VALVE BRACKET	
M20050	EA	2.00	2.125 X 1/2 I.D. CROSS STRAP ARM TAPPED	
M20057	EA	1.00	1/2"I.D. DUAL CROSS STRAP DPR ARM TAPPED	
M20112	EA	1.00	LARGE BURNER PED PLATE WELD ASSEMBLY	
M20487	EA	2.00	3 INCH FIGURE 611 UL HOMESTEAD GAS COCK CSD-1	
M29006	EA	1.00	3 X 6 JUNCTION BOX NIPPLE	

BILL OF MATERIAL

As-Built

Customer: WICHITA BURNER - 101373 **Purchase Order: JTHEQ1-0017730**

Job Number: J000120197 - 0 **Item: CM10B-GO-30** **Qty: 1** **Order Number: B000081346 - 1**

PFI Part No.	U\M	Qty.	Material Description	Ship Loose
M30047	EA	1.00	5/8" CM VARICAM STRAIGHT GAS SINGLE FUEL ASSEMBLY	
P22330	EA	1.00	B-1/2 HAUCK MOD OIL VALVE BRACKET	
X02034	EA	2.00	1/4 INCH STD BLACK HALF COUPLING	
X02339	EA	1.00	3 X 3-1/2 STANDARD BLACK PIPE NIPPLE	
X02450	EA	12.00	PFL203 KML FLANGETTE (2 PER BOX)	
X02469	EA	6.00	SA201-8 1/2" BALL BEARING	
X02622	EA	1.00	1/4 BRASS HEX NIPPLE 122-4	
X02677	EA	1.00	3/8 X 1/4 COMP-MP STR 68-64	
X02692	EA	18.00	1/4-20 KEP NUT	
X04289	EA	4.00	3/8-24 ROD END BALL JOINT RIGHT 6072K174	
X04289	EA	8.00	3/8-24 ROD END BALL JOINT RIGHT 6072K174	
X09252	EA	4.00	3/8 X 1 X 25/64 X .050 18-8 S.S. FLAT WASHER	
X09253	EA	4.00	3/8 X 1/2 HEX SOCKET HEAD SHOULDER SCREW	
X09254	EA	6.00	5/16-24 X 1/2 HEX HEAD CAP SCREW(ZINC PLATED)	
X09292	EA	12.00	1/4-20 X 3/4 CARRIAGE BOLT GRADE 2 (ZINC PLATED)	
X09301	EA	1.00	1/4-20 DOUBLE TAB WELD NUT	
X09346	EA	6.00	1/4-20 X 3/4 HEX HEAD CAP SCREW	
X09377	EA	15.00	10-32 X 1-1/2 SOCKET CAP SCRW FT	
X09412	EA	8.00	3/8-16 X 1-1/2 HEX HD CAP SCREW	
X09499	EA	6.00	1/4-20 X 5/8 SQ. HEAD CONE POINT SET SCREW	
X09557	EA	15.00	10-32 NYLON INSET HEX LOCK NUT 90631A411	
X09566	EA	4.00	5/16-18 WHIZ NUT	
X09569	EA	4.00	3/8-24 RIGHT HAND HEX NUT PLATED	
X09569	EA	8.00	3/8-24 RIGHT HAND HEX NUT PLATED	
X09649	EA	30.00	NO. 10 EXT. TOOTH LOCK WASHER	
X09656	EA	6.00	1/2 INCH STD. FLAT CUT WASHER	
X09709	FT	16.00	3/8-24 RIGHT HAND ALL THREAD ROD PLATED	
X09731	EA	1.00	2 INCH DIA. 1/8 INCH THICK BOROSILICATE SIGHT GLASS 8477K48	
X09775	EA	4.00	1/4-20 X 3-1/2 U BOLT	
X09795	IN	40.50	173220.05 PREPUNCHED DIN RAIL, ABB ENTRELEC	

Power Flame Incorporated
2001 S 21st Street
Parsons, Ks 67357
Ph: (620) 421-0480
Fx: (620) 421-0948
csd@powerflame.com

Date Generated: 02/01/2021
Job Number: J000120197-0
Order Number: B000081346-1
Burner Model: CM10B-GO-30
Serial Number:
Sold to: WICHITA BURNER

Spare Parts List and Order Form

Part#	Req'd Qty. Per Burner		Part Description	Is Obsolete	Alternate Part	Net Each	Qty. Ordered
056150	1	EA	15 HP 3525 RPM 208/230/460/3 ODP 215T FR	No			
060420	1	EA	M9194C-1005 HONEYWELL MODUTROL MOTOR	No			
090526	1	EA	182 100% CHICAGO DESIGN 62 3500 RPM CW	No			
101030	1	EA	59B-R (SG-0514X) NOZZLE RATE 240 GPH @	No			
102850	1	EA	RV3002 WEBSTER REGULATING VALVE 200 PSI	No			
121150	1	EA	ALO90 LOVEJOY PUMP COUPLING 5/8 X 1/2	No			
140020	1	EA	7990K10 4PDT CUTLER HAMMER GAS-OIL FUEL	No			
140700	1	EA	CRTP1A9M9 OSLO SPST ROCKER SWITCH	No			
140720	1	EA	CRTP22A-9M9 OSLO DPDT NO CENTER OFF	No			
140740	1	EA	SPM1X399M9E OSLO N.O. MOM PUSHBTN SWITCH	No			
171101	1	EA	RFS-4001-110 CLEVELAND CONTROLS AIR	No			
197461	2	EA	V710LBSV22 3 INCH ASCO VALVE BODY STD.	No			
199502	2	EA	AH2E212S4 ON-OFF 14 SECOND 120/60,	No			
202650	2	EA	8040H8 3/8 INCH 15 PSI NEMA 4 120 VOLT	No			
210210	1	EA	S302GF02V2AC9 N.O. 3/32 PORT 1/8 PIPE	No			
262200	1	EA	B-1/2-24W HAUCK MODULATING OIL VALVE	No			
302600	1	EA	220G 3 INCH MAXITROL REGULATOR WITH	No			
302801	1	EA	325-3 3/8 INCH MAXITROL REGULATOR WITH	No			
320001	1	EA	1092-PF-G 6000 VOLT 50/60 HZ. ALLANSON	No			
403465	1	EA	C7927A-1016 HONEYWELL SOLID STATE UV	No			
406990	1	EA	R7851B-1000 HONEYWELL DYNAMIC	No			
407710	1	EA	ST7800A-1039 HONEYWELL 30 SECOND PURGE	No			
465330	2	EA	0-100 PSI 2-1/2 INCH DIAL 1/4 INCH LOWER	No			
534610	1	EA	O RING, 2" O.D. X 1.875 I.D., BUNA N, 94	No			
538001	1	EA	P/F AIR ATOMIZING NOZZLE, 300-80, DWG.	No			

555500	3	EA	55.33.8.120.0000 FINDER OR PT320615 SCHR	No
555510	3	EA	94.73SMA FINDER OR PT78730 SCHRACK	No
B20750	1	EA	CM9-CM10C 6.625" DIFF WELD ASSY	No
X04289	4	EA	3/8-24 ROD END BALL JOINT RIGHT 6072K174	No
X04289	8	EA	3/8-24 ROD END BALL JOINT RIGHT 6072K174	No

————Send Orders To:-————

Please visit www.powerflame.com for your local representative.

----————————————Ship To————————————----

Please enter my purchase order for the above spare parts on out P.O. # _____

THIS QUOTATION IS VALID FOR 30 DAYS FROM THE DATE GENERATED AND IS SUBJECT TO THE PFI CONDITIONS OF SALE.

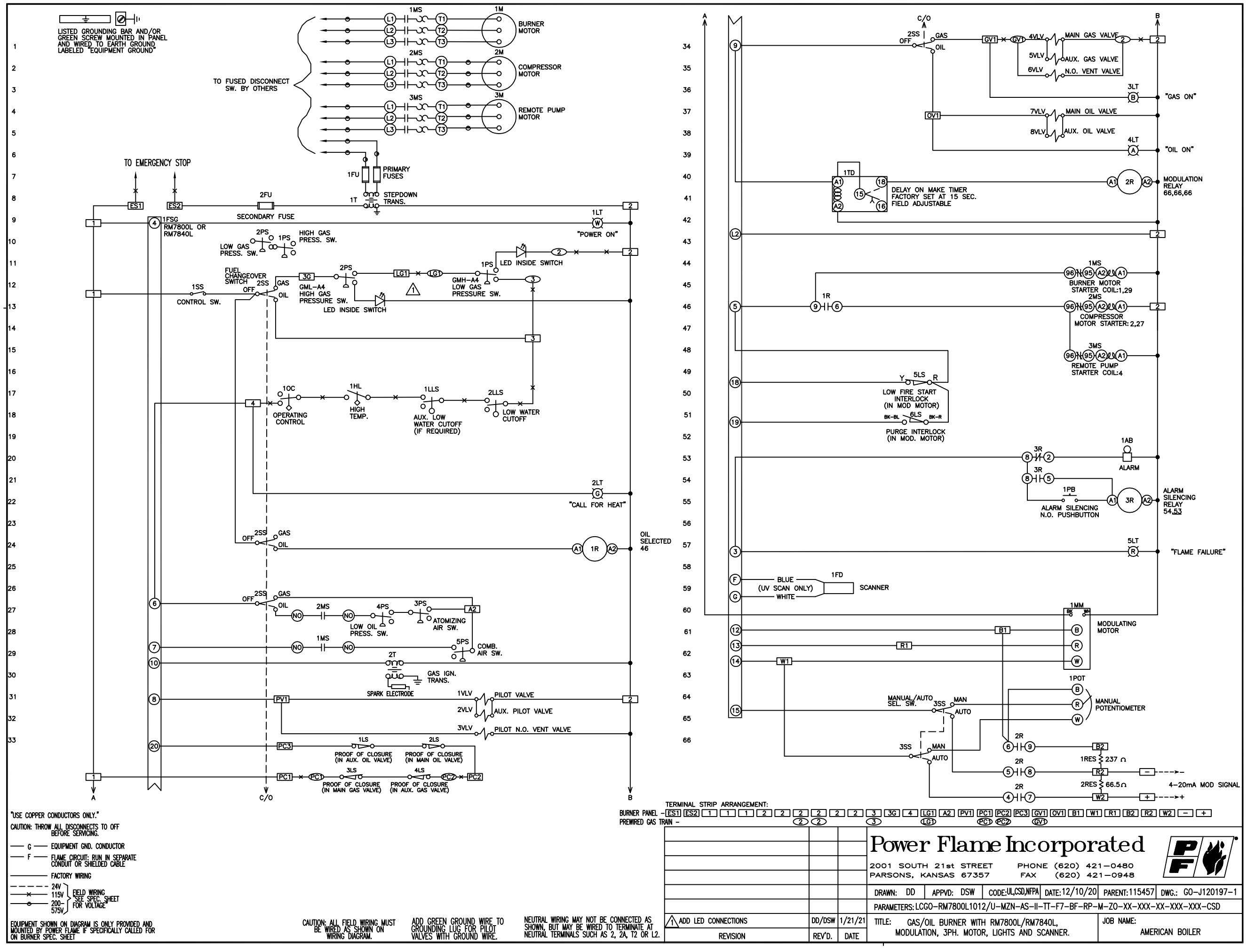

"USE COPPER CONDUCTORS ONLY."

CAUTION: THROW ALL DISCONNECTS TO OFF BEFORE SERVICING.

— G — EQUIPMENT GND. CONDUCTOR

— F — FLAME CIRCUIT: RUN IN SEPARATE CONDUIT OR SHIELDED CABLE

——— FACTORY WIRING

- - - - - 24V
—×— 115V
—o— 200–575V

FIELD WIRING SEE SPEC. SHEET FOR VOLTAGE

EQUIPMENT SHOWN ON DIAGRAM IS ONLY PROVIDED AND MOUNTED BY POWER FLAME IF SPECIFICALLY CALLED FOR ON BURNER SPEC. SHEET

CAUTION: ALL FIELD WIRING MUST BE WIRED AS SHOWN ON WIRING DIAGRAM.

ADD GREEN GROUND WIRE TO GROUNDING LUG FOR PILOT VALVES WITH GROUND WIRE.

NEUTRAL WIRING MAY NOT BE CONNECTED AS SHOWN, BUT MAY BE WIRED TO TERMINATE AT NEUTRAL TERMINALS SUCH AS 2, 2A, T2 OR L2.

TERMINAL STRIP ARRANGEMENT:

BURNER PANEL – ES1 ES2 1 1 1 2 2 2 2 2 2 3 3G 4 LG1 A2 PV1 PC1 PC2 PC3 GV1 OV1 B1 W1 R1 B2 R2 W2 – +

PREWIRED GAS TRAIN – 2 2 3 LG1 PC1 PC2 GV1

REVISION	REV'D.	DATE
1 ADD LED CONNECTIONS	DD/DSW	1/21/21

Power Flame Incorporated

2001 SOUTH 21st STREET PARSONS, KANSAS 67357
PHONE (620) 421–0480 FAX (620) 421–0948

DRAWN:	APPVD:	CODE:	DATE:	PARENT:	DWG.:
DD	DSW	UL,CSD,NFPA	12/10/20	115457	GO-J120197-1

PARAMETERS: LCGO–RM7800L1012/U–MZN–AS–II–TT–F7–BF–RP–M–ZO–XX–XXX–XX–XXX–XXX–CSD

TITLE: GAS/OIL BURNER WITH RM7800L/RM7840L, MODULATION, 3PH. MOTOR, LIGHTS AND SCANNER.

JOB NAME: AMERICAN BOILER

PROPRIETARY AND CONFIDENTIAL INFORMATION OWNED BY POWER FLAME INCORPORATED. IT SHALL NOT BE REPRODUCED, IN WHOLE OR IN PART, AND SHALL NOT BE DISCLOSED TO ANYONE OUTSIDE POWER FLAME WITHOUT THE PRIOR EXPRESS APPROVAL OF POWER FLAME.

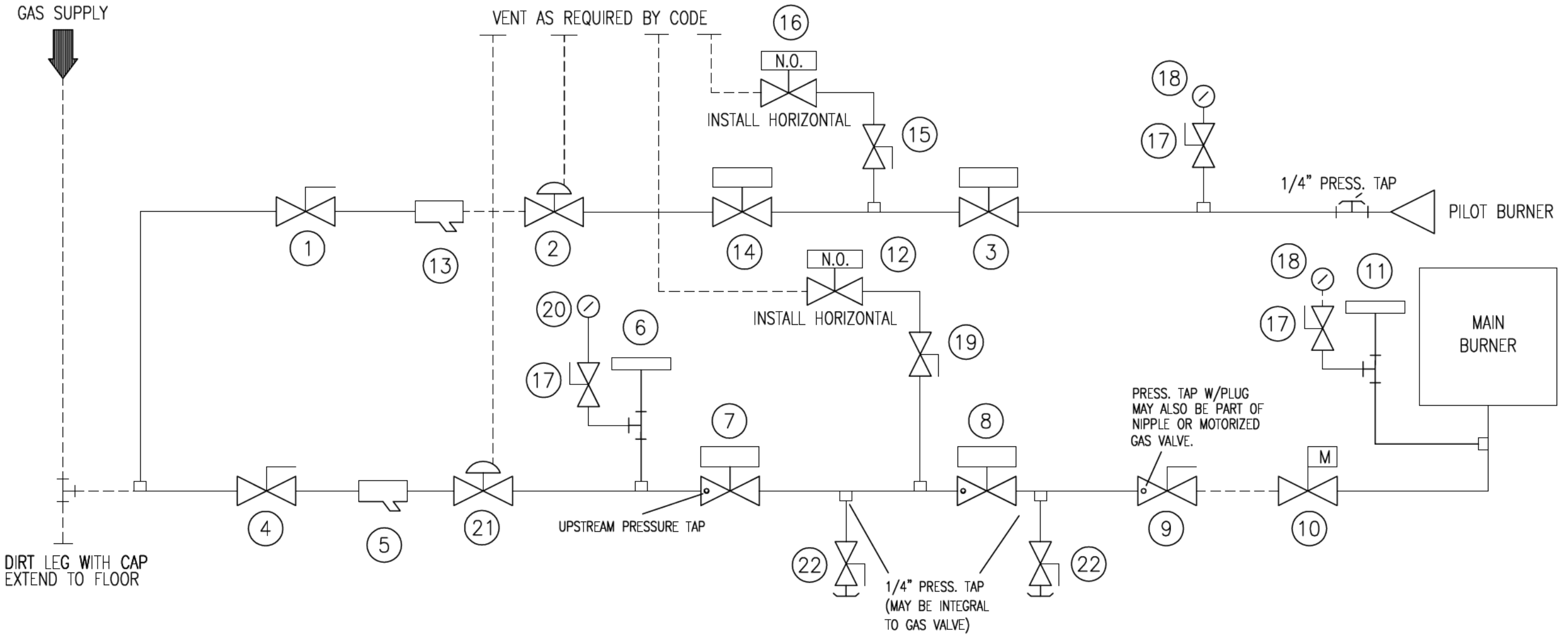

ITEM	PART NUMBER	DESCRIPTION
1	980402	PILOT SHUTOFF COCK
2	302801	PILOT REGULATOR
3	202650	PILOT VALVE
4	M20487	MAIN GAS SHUTOFF COCK
5	731751	MAIN GAS 'Y' STRAINER
6	151613	LOW GAS PRESS. SW.
7	199502 & 197461	AUX. GAS VALVE W/ P.O.C.
8	199502 & 197461	MAIN GAS VALVE W/ P.O.C.
9	M20487	MAIN GAS LEAK TEST COCK
10	195930	BUTTERFLY VALVE
11	151604	HIGH GAS PRESS. SW.
12	284600	N.O. VENT VALVE
13	731000	PILOT 'Y' STRAINER
14	202650	AUX. PILOT VALVE
15	351590	PILOT N.O. VENT VALVE LOCKING COCK
16	210210	PILOT N.O. VENT VALVE
17	980031	GAUGE COCK
18	463100	PRESSURE GAUGE
19	351620	N.O. VENT VALVE LOCKING COCK
20	464250	PRESSURE GAUGE
21	302600	MAIN GAS REGULATOR
22	980031	LEAK TEST COCK

NOTE: WHEN PILOT GAS PRESS. REG. IS AGA CERTIFIED DEVICE WITH INTEGRAL LEAK LIMITING ORIFICE; SUCH AS RV-20, RV-10 AND RV-12, VENT LINE FOR PILOT GAS PRESS. REG. MAY NOT BE REQ'D. UNLESS SPEC'D. BY OTHER CODES. (NO PROVISION FOR EXTERNAL VENTING ON RV-10 & 12) (RV-20 HAS OPTIONAL VENTING WITH P/N. 30912)

REFER TO SPECIFIC REGULATOR LITERATURE FOR RECOMMENDED STRAIGHT RUN OF PIPING BEFORE/AFTER REGULATOR AND SENSING LINE (IF APPLIC.)

——— FACTORY PIPED
- - - - - - - FIELD PIPED

CAUTION: ALL FIELD PIPED COMPONENTS MUST BE MOUNTED IN THE PROPER LOCATION AND PROPER DIRECTION OF GAS FLOW.

REVISION	REV'D.	DATE

Power Flame Incorporated
2001 SOUTH 21st STREET
PARSONS, KANSAS 67357
PHONE (620) 421-0480
FAX (620) 421-0948

DRAWN:	APPVD:	DATE:	PARENT:	DWG.:
DD	DSW	12/10/20	117702	PDG-J120197

DRAWING PARAMETERS: N/A
CODE: UL, CSD-1, NFPA

TITLE: GAS PIPING FOR MODULATION BURNER WITH INPUTS 12,500,000 AND ABOVE BTU'S.

JOB NAME: AMERICAN BOILER

PROPRIETARY AND CONFIDENTIALITY NOTICE: THE CONTENTS OF THIS TEMPLATE CONSTITUTE PROPRIETARY AND CONFIDENTIAL INFORMATION OWNED BY POWER FLAME INCORPORATED. IT SHALL NOT BE REPRODUCED, IN WHOLE OR IN PART, AND SHALL NOT BE DISCLOSED TO ANYONE OUTSIDE POWER FLAME WITHOUT THE PRIOR EXPRESS APPROVAL OF POWER FLAME.

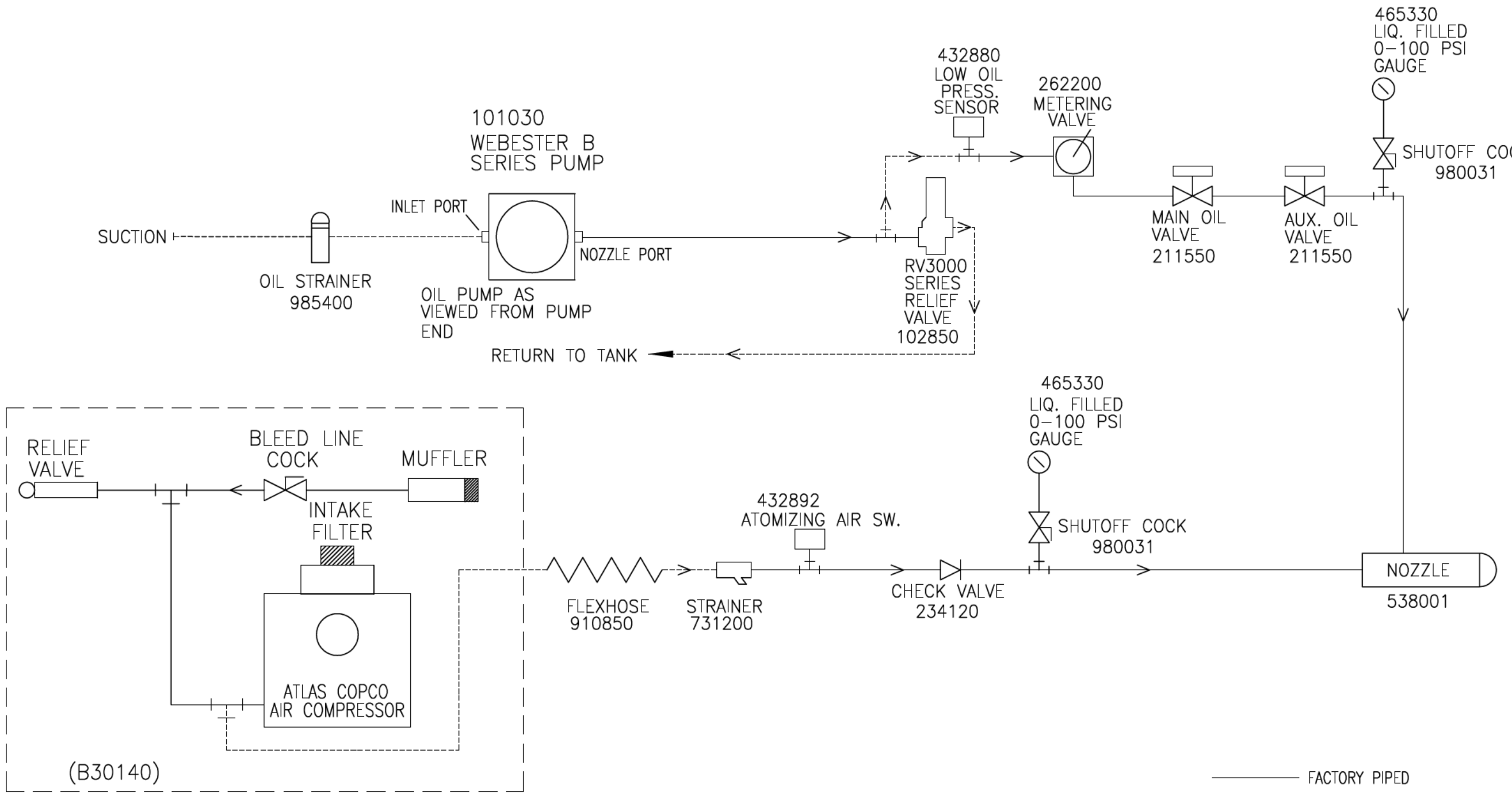

FACTORY PIPED

FIELD PIPED

CAUTION: ALL FIELD PIPING MUST BE MOUNTED IN THE PROPER LOCATION AND IN PROPER DIRECTION OF OIL FLOW.

DO NOT USE TEFLON TAPE

EQUIPMENT SHOWN ON DIAGRAM IS ONLY PROVIDED AND MOUNTED BY POWER FLAME IF SPECIFICALLY CALLED FOR ON BURNER SPEC. SHEET.

REVISION	REV'D.	DATE

Power Flame Incorporated

2001 SOUTH 21st STREET
PARSONS, KANSAS 67357

PHONE (620) 421–0480
FAX (620) 421–0948

DRAWN: DD	APPVD: DSW	DATE: 12/10/20	PARENT:115457	DWG.: PDO–J120197	
DRAWING PARAMETERS: N/A	CODE: UL, CSD–1, NFPA–85				
TITLE: CM #2 OIL PIPING SCHEMATIC FULL MOD. WITH REMOTE PUMP & AIR COMPRESSOR.			JOB NAME: AMERICAN BOILER		

PROPRIETARY AND CONFIDENTIALITY NOTICE: THE CONTENTS OF THIS TEMPLATE CONSTITUTE PROPRIETARY AND CONFIDENTIAL INFORMATION OWNED BY POWER FLAME INCORPORATED. IT SHALL NOT BE REPRODUCED, IN WHOLE OR IN PART, AND SHALL NOT BE DISCLOSED TO ANYONE OUTSIDE POWER FLAME WITHOUT THE PRIOR EXPRESS APPROVAL OF POWER FLAME.

INDUSTRIALS GROUP

Gardner Denver

Screw Compressors

ESM 7 – 22 Fixed Speed & VS 7 – 22 Variable Speed





Absolute reliability

The growing industrial demand for compressed air requires compressor manufacturers to provide more reliable, economic and versatile compressors within a small footprint. Gardner Denver addresses these requirements, with the introduction of the new ESM / VS 7-22 series.

Without an efficient, durable air-end, a unique compressor design means nothing. That's why Gardner Denver designs and manufactures this critical component to exacting standards. Tens of thousands of our air-ends are in operation world-wide, proving that the heart of the ESM / VS 7-22 Series can stand the test of time.

Proven results even in the toughest conditions

Gardner Denver product development is a balance of technology, efficiency and performance — all focused on meeting your demand for compressed air.

Also in smaller business applications you can measure efficiency, and see the value of year on year saving!

Advanced design

The ESM / VS 7-22 fixed and variable speed screw compressors are designed to meet the high requirements which the modern work environment and machine operators place on them. As a result, our belt driven ESM / VS 7-22 compressors are extremely energy efficient, quiet, reliable and easy to use, ensuring long operating life and delivery of optimal air quality.

The number of special options available makes the ESM / VS 7-22 compressors the right choice for producing high quality compressed air for a wide range of needs.



Customised for flexibility

The basic ESM / VS 7-22 compressors can be equipped with useful options to meet even the toughest demands for building up a flexible compressor station. As a result, you will get a compact air solution which can be installed quickly and efficiently wherever the need for high quality compressed air exists.



Complete compressor station

includes compressor and refrigerant dryer, both mounted on a tank.

Reliable add-on refrigerant dryer

- Minimum power consumption
- Environmentally friendly refrigerant
- Ensuring top performance and reliability with minimum pressure losses

All components are ready to "Plug & Play" Ideal where a smaller footprint is required

High quality air receiver

- Built to the highest standard EN 87/404
- With pre dryed high quality air, no condensate collects in the receiver

Integrated heat recovery

From 15 kW, the compressors are available with highly efficient heat recovery systems, which can be factory fitted or are available as retrofit kits comprising all the necessary pipe-work and fittings.

Innovative control system

GD PILOT Control System for reliability and simplicity of operation

The new control system ensures reliable operation and protects your investment by continuously monitoring the operational parameters.

The "GD PILOT" controller also has the capability to have programmable inputs and outputs, control additional equipment as well as providing the following features with clear readable text.

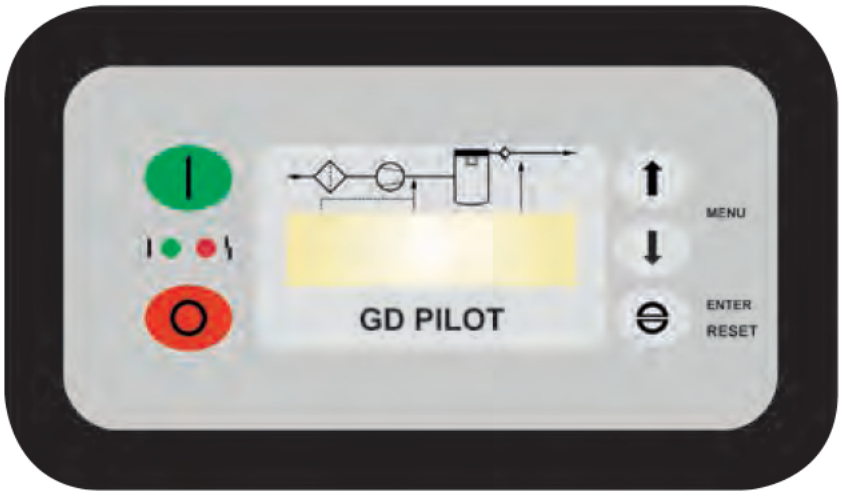

- Discharge/line pressure display
- Air/oil temperature display
- Total hours run and loaded hours
- Service due indicator
- Enhanced fault log monitor
- Real time clock
- Timer controlled stop/start
- Remote stop/start
- Auto restart on power failure
- Second pressure setting
- Status indication
- RS485 – Modbus RTU

More benefits

- Three line LCD interface
- Dryer control
- Programmable input and outputs

Dual position ability

- Flexibility for tank mounted version
- User-friendly design



Save even more energy with our unique compressed air management systems

GD Connect 4

Air management system

Today no modern energy efficient compressed air system is complete without the installation of an intelligent master control system.

The new GD Connect 4 is the ideal control solution for smaller compressed air stations, and will intelligently control up to 4 fixed speed compressors.



GD Connect 4

GD Connect 12

Sequencer with up to 35% energy savings!

- Easy to install
- Improved performance and efficiency
- Simple to operate
- Detailed management reports



GD Connect 12

Unique compressed air management system

Compressor systems are typically comprised of multiple compressors delivering air to a common header.

The combined capacity of these machines is generally greater than the maximum site demand. To ensure the system is operated to the highest levels of efficiency, the “GD Connect 12” management system is essential.

The GD Connect 12 can intelligently control up to 12 fixed speed or variable speed compressors.

- Intelligently selecting the right combination of compressors
- It reduces energy consumption by tightening the network pressure to the smallest possible band

Each 1 bar decrease potentially results in a 6% reduction in energy consumption and as much as 25% decrease in air leakage losses.

- Keeping off load running to the absolute minimum

VS series: Our compressor solution for varying air demand

Typically, air demand in a plant varies widely throughout the day. In addition, fluctuations can occur from shift-to-shift, weekday-to-weekend, and season-to-season. Pressure requirements can also change from machine-to-machine or from one application to another. You need someone to evaluate your unique, often complex requirements and recommend a tailored solution.

The VS variable speed compressor - one smart solution

Variable speed compressors can efficiently and reliably handle the varying air demand found in most plant air systems. These compressors speed up and slow down to match air supply to air demand as it fluctuates.

The right variable speed compressor for the application delivers significant energy savings and a stable consistent air supply.

The VS compressor is an efficient and versatile solution even for the most demanding industrial applications and carries all of the Gardner Denver features and benefits associated with reliable, easy to use operations and high efficiency.

The Gardner Denver air-end ensures that maximum reliability and the highest efficiency level are incorporated into these packages. The variable speed drive/motor/compressor combination and the controller are designed to meet the varying demands of your system at the lowest possible specific power, which benefits you in the form of energy cost savings.



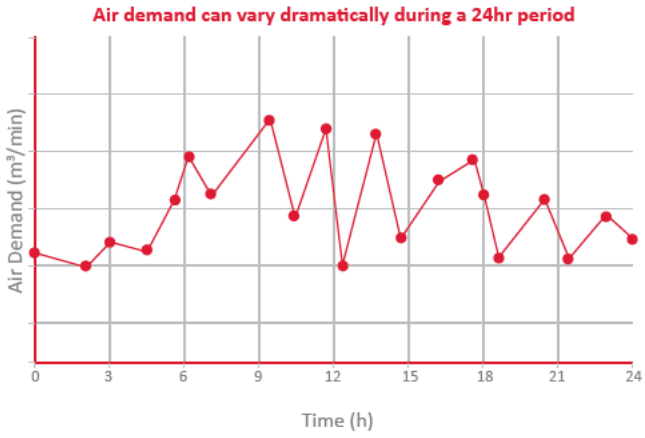

"The VS Series saves money and maximises plant productivity — It's like having several efficient compressors in one. Smart!"



Reduced wear and tear thanks to wide regulation range

Superb flexibility comes as standard with the VS series

With a wide capacity range, the VS series features the market's quickest and widest response to air demand changes.

Your benefits during varying air demand:

- Reduced wear and tear on inlet and discharge valve components
- No shock bearing loads for the air-end
- Minimised pulsating load (full load pressure/off load pressure) for all pressurised components within compressor package (oil receiver, hoses etc.)



Tried and tested inverter concept

- Integrated in the electric cabinet
- Protected from dust by replaceable inlet filters
- Maximum reliability by optimised cooling system
- Ensures high availability and long life time

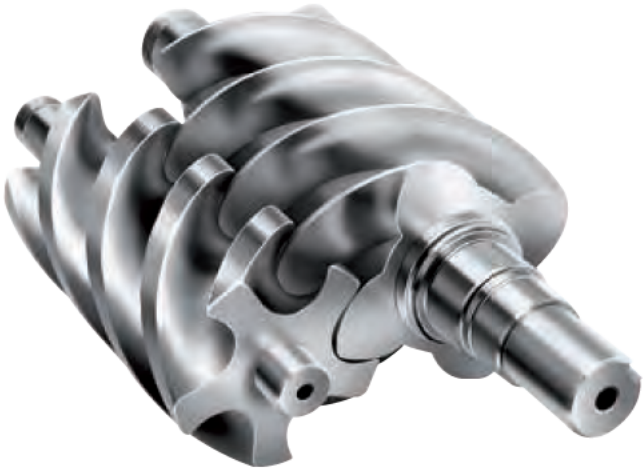

Genuine GD Parts – The perfect fit for maximum performance and best efficiency

The vast experience and knowledge of GD's highly qualified air specialists, coupled with the use of genuine GD parts and quality consumables that are guaranteed to perform, ensures the best possible efficiency from your GD air system.

Service friendly design

- Short servicing times
- Long service intervals
- Reduced service costs

Minimum space requirements

- Small footprint saves space, allowing installation even in restricted areas

First class accessibility

- Panels and covers easily removable with quick-release catches

Easy service items

- Spin on/off separator cartridge gives residual oil carryover of less than 3mg/m^3
- Quick oil change via external drain
- Easy access suction filter element

Combined air/oil cooler

- Low air discharge temperature
- No unnecessary wear or condensate in the system

Easy servicing

The design of these packages assures the service points are readily accessible. The enclosure side doors are hinged and removable to allow complete access to all service points. The reduced number of moving parts also lowers maintenance costs.



"The use of genuine GD parts and lubricants will maximise your compressor's life and efficiency."



"GD Distributors provide world class maintenance and service support with a team of highly trained and skilled compressor service technicians"

GD 5 Years Extended Warranty Protect 5 - our total commitment to quality and worry free ownership

GD 5 Years Warranty - a simple and free of charge extended warranty scheme from GD - once again, taking the industry standard and making it better.

PROTECT 5 years

Extended Warranty for GD Compressors



GD provides **Protect 5 - an extended warranty cover on your compressor** for 5 years with GD's authorised service providers delivering a guaranteed quality service*.

We believe that the **GD Protect 5 will become a way of life "working when you need it" to provide maximum uptime AND peace of mind.**

Protect 5 – a simple and free of charge extended warranty scheme from GD.

* Terms and conditions apply. Contact your nearest authorised service provider for full details.



Your benefits at a glance - quality from A to Z

For these fixed and variable speed compressors, we have generated easy-to-use and accurate drive systems and greatly invested on developing optimal cooling and ventilation. All these features are of direct benefit to the users.

Maintenance of these compressors is facilitated by having a user-friendly enclosure.

Low noise level is ensured.

Very small installation footprint

- Thanks to advanced compressor concept
- Passes through a standard doorway
- Simplifies installation work
- Can be installed where it is needed
- Expensive pipework can be eliminated





High efficiency motor

- **IP 55 motor**
  The drive/motor/compressor combination and the controller are designed to meet the demands of your system at the lowest possible specific power.



High ambient temperature as a standard (45°C)

- Ensures continuous operation even under harshest conditions
- Ensure stress-free operation through efficient heat dissipation

Fully integrated air-end design

- Well proven air-ends
  The innovative integrated design, with oil separation, oil filter, thermostatic bypass valve, reduces the number of external hoses and components resulting in increased reliability.

Automatic belt tensioning

- Maintenance-free
- Provides correct belt tension
- Ensures long belt life

Technical data

ESM 7 – ESM 22 - Fixed Speed Screw Compressors

Gardner Denver model	Nominal pressure	Drive motor	FAD[1]	Noise level[2], 1m	Weight	Dimensions
	bar g	kW	m³/min	dB(A)	kg	L x W x H mm
ESM 7	7.5 10 13	7.5	1.32 1.09 0.87	70	205	667 x 630 x 1050
ESM 11	7.5 10 13	11	1.83 1.64 1.34	70	219	667 x 630 x 1050
ESM 15	7.5 10 13	15	2.72 2.30 1.83	70	335	787 x 698 x 1202
ESM 18	7.5 10 13	18.5	3.28 2.79 2.36	71	361	787 x 698 x 1202
ESM 22	7.5 10 13	22	3.66 3.27 2.65	71	367	787 x 698 x 1202

VS 7 – VS 22 - Variable Speed Screw Compressors

Gardner Denver model	Nominal pressure	Drive motor	FAD[1]	Noise level[2], 1m	Weight	Dimensions
	bar g	kW	m³/min	dB(A)	kg	L x W x H mm
VS 7	7.5 10 13	7.5	0.48 1.27 0.46 1.02 0.42 0.83	69	222	667 x 630 x 1050
VS 11	7.5 10 13	11	0.63 1.81 0.65 1.57 0.58 1.27	70	231	667 x 630 x 1050
VS 15	7.5 10 13	15	0.93 2.61 0.89 2.19 0.84 1.70	72	365	787 x 698 x 1202
VS 18	7.5 10 13	18.5	1.34 3.06 1.30 2.64 1.24 2.23	73	381	787 x 698 x 1202
VS 22	7.5 10 13	22	1.05 3.55 0.95 3.16 0.91 2.69	73	386	787 x 698 x 1202

ESM 7-22TK / VS 7-22TK - TurnKey Compressor Solution (incl. Add-on dryer and Tank Mounted)

Gardner Denver model	Nominal pressure	Refrigeration dryer[3]	Air receiver	Dryer voltage	Weight	Dimensions	Air Outlet
	bar g			V/Hz	kg	L x W x H mm	
ESM7TK/VS7TK	7.5 10	GDD12HS BO	270 Litres	230 / 50 / 1	336 / 353	1541 x 695 x 1577	RP 3/4"
ESM11TK/VS11TK	7.5 10	GDD18HS BO	270 Litres	230 / 50 / 1	350 / 362		
ESM15TK/VS15TK	7.5 10	GDD30HS BO	500 Litres	230 / 50 / 1	545 / 575	1883 x 815 x 1825	RP 1"
ESM18TK/VS18TK	7.5 10	GDD39HS BO	500 Litres	230 / 50 / 1	617 / 637		
ESM22TK/VS22TK	7.5 10	GDD39HS BO	500 Litres	230 / 50 / 1	622 / 642		

[1] Data measured and stated in accordance with ISO1217, Ed. 4, Annex C & Annex E at the following conditions and the following working pressures are used: 7.5 bar models at 7 bar, 10 bar models at 9 bar and 13 bar models at 12 bar.
Air Intake Pressure 1 bar a
Air Intake Temperature 20°C
Humidity 0 % (Dry)

[2] Measured in free field conditions in accordance with ISO 2151, tolerance +/– 3 dB

[3] The refrigerant dryer requires a separate electric supply. Data refer to DIN ISO 7183 (class 4, pressure dew point 3° C). For further specifications please refer to refrigerant dryer documentation.



Gardner Denver

Global Expertise



The GD rotary screw compressor range from 2.2 – 500 kW, available in both variable and fixed speed compression technologies, are designed to meet the highest requirements which the modern work environment and machine operators place on them.



The oil-free EnviroAire range from 15 – 160 kW provides high quality and energy efficient compressed air for use in a wide range of applications. The totally oil-free design eliminates the issue of contaminated air, reducing the risk and associated cost of product spoilage and rework.



A modern production system and process demands increasing levels of air quality. Our complete **Air Treatment Range** ensures the highest product quality and efficient operation.



Compressor systems are typically comprised of multiple compressors delivering air to a common header. The combined capacity of these machines is generally greater than the maximum site demand. To ensure the system is operated to the highest levels of efficiency, the **GD Connect** air management system is essential.

gdcompressors.eu@gardnerdenver.com
www.gardnerdenverproducts.com

For additional information please contact Gardner Denver or your local representative.

Specifications subject to change without notice.

Copyright 2015 Gardner Denver.
G6 87.GB.05/15.CI

Legend® Series

Positive Displacement Blowers & Vacuum Pumps



GARDNER DENVER

1859 2009

SESQUICENTENNIAL

GD

GARDNER DENVER

Experience Proven Results™

Sutorbilt Legend Series

Setting the Industry Standard

The Gardner Denver Sutorbilt® Legend® line of rotary positive displacement lobe blowers and vacuum pumps are the result of more than 150 years experience in the design, manufacture and support of superior industrial equipment.

- Available in 20 sizes with 4 different configurations
- The Legend Series delivers
  - Pressure to 15 psig
  - Vacuum to 16" Hg
  - Flows to 3,015 cfm

Why the Sutorbilt line of blowers and vacuum pumps earned the name "Legend"

- Backed by the most experienced and trusted distributor network in the industry
- Every Sutorbilt Legend blower/vacuum pump is built under rigid ISO 9001:2000 quality standards
- Each Legend is individually tested to meet rigorous performance specifications
- Requested by leading Original Equipment Manufacturers (OEMs) worldwide for a wide range of applications, due to the ability to customize the Legend to their specifications while meeting strict performance requirements
- A Legend is at the heart of an ever-expanding variety of air solutions working every minute of every day around the globe
- Dual Splash Lubricated and Quiet Series (for up to 5 dBA reduction) are available

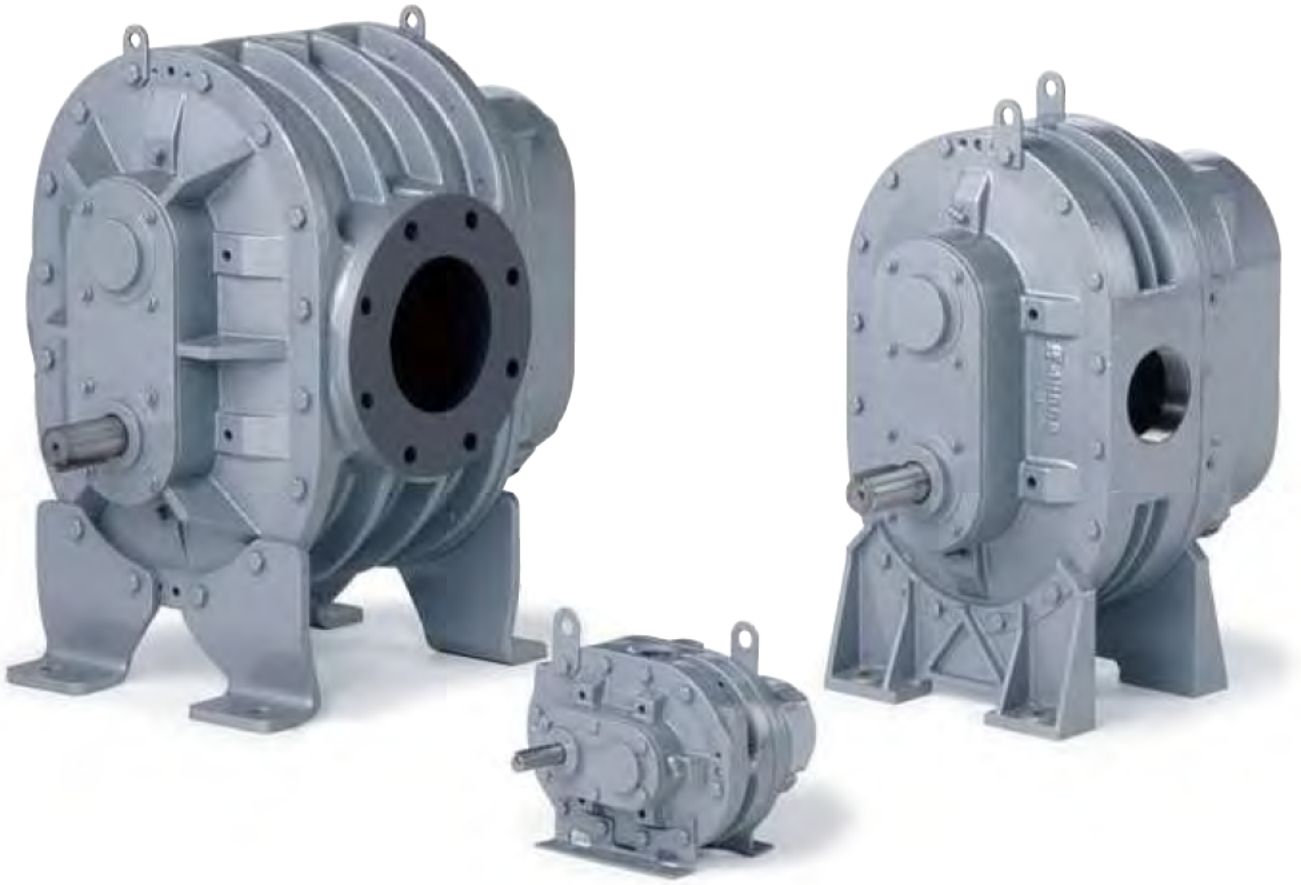

Proven Performance. Global Applications. Local Support.

Quiet Operation

The sound data shown below compares the Legend (red) and a comparably sized blower (green) operating at 3,275 rpm and 12 psig.

- Improved blower design reduces the sound pressure output of the Legend blower
- Typical reduction is 3 dBA which represents 50% less noise than the competition

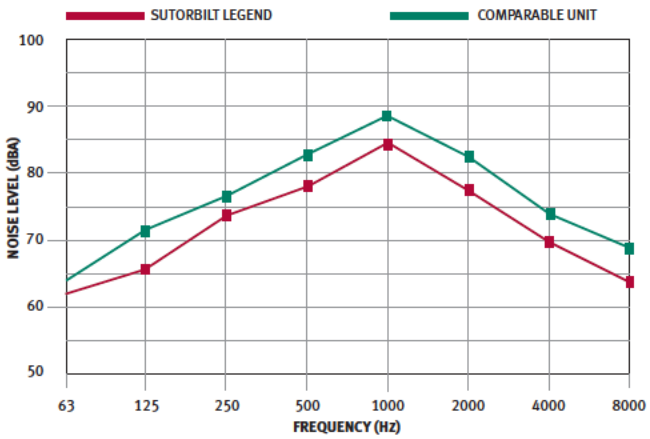

Superior Local Sales and Service

- Extensive network of authorized Gardner Denver/ Sutorbilt distributors
- Offers the most convenient local sales and service support in the industry
- Factory trained professionals are experts in blower/ vacuum pump technology
- Providing system installation guidance, troubleshooting and optimization recommendations for new or existing applications

Even a "Legendary" Warranty

Every Sutorbilt Legend Series blower/vacuum pump is covered by a "Legendary" warranty:

- **24 months** from the date of shipment or
- **18 months** from the date of installation, whichever occurs first

Industry	Application
Aquaculture	Aeration
Cement & Lime	Fluidization & Conveying
Chemical	Vacuum Processing & Conveying
Coal Bed/Landfill	Methane Gas Recovery
Dairy	Automated Milking
Dry Bulk Hauling	Trailer Unloading & Aeration
Environmental Services	Sewer Cleaning & Portable Restroom Services
Industrial	Material Vacuuming
Milling & Baking	Blending & Conveying
Oil & Gas	Gas Collection & Sparging
Power Generation	Fly Ash Conveying & Aeration
Process Gas	Gas Boosting
Pulp & Paper	Chip Conveying & Process Vacuum
Resin & Plastic	Processing & Conveying
Soil Remediation	Vacuum Extraction & Sparging
Vacuum Excavation	Potholing & Slurry Recovery
Wastewater	Aeration & Backwashing

The above table illustrates industries which depend upon the Sutorbilt® Legend® to deliver clean, oil-free air to a wide range of global applications.

Legendary Design Features

1 High-strength impeller case is heavily ribbed and machined from a single piece of cast iron and features oversized dowel pins for precise mounting and alignment of head plates

- *Results in reduced noise and more stable, vibration-free operation*

2 Head plates, machined from cast iron, are ground on the interior surface to precise operating tolerances. Bearing fits are machined into head plates to assure exact bearing positioning

- *Ensures accurate, fixed-dimension clearances through all blower operating conditions and temperature ranges*

3 Impellers are machined from cast iron to an exact profile and are permanently fastened to steel shafts. They are dynamically balanced for smooth operation in any assembled position

- *Provides extra strength and rigidity to handle continuous maximum loads without fatigue or deflection*

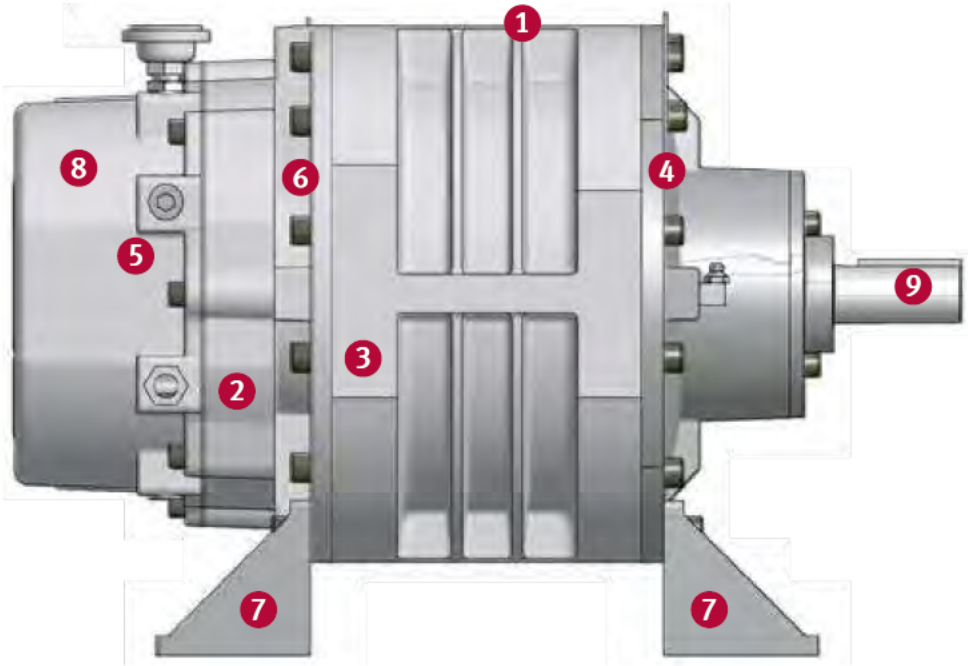

4 Anti-friction bearings are used exclusively (table at right)

- *Optimum bearing selection provides longer blower life and added overhung shaft load capacity*

Gear diameter	Single row ball	Double row ball	Cylindrical roller	Spherical roller
2"	•			
3–4"	•		•	
5"		•	•	
6–8"		•		•



2MP LHC 3MR RHC 4LVR BHC 5MR RHC

5 3–6" R versions feature improved timing and ease of teardown/rebuild through grip rings, which expand against the bore and compress on the shaft for a secure, mechanical shrink fit

2, 7 and 8" P versions feature precision machines alloy steel timing gears, permanently pinned to the shafts

- *Assures non-slip timing even under the most strenuous loading conditions*

6 High temperature Viton® oil seals

- *Maximizes the seal life in continuous, severe-duty applications to provide leak-free operation*

7 Flex-Mount™ design on 2, 7 and 8" blowers is adaptable to either vertical or horizontal installation, while 3–6" R-version blowers have universal feet

- *The feet are precisely machined and match the footprints of many competitive units*

8 Timing gears and gear end bearings are splash lubricated utilizing an abundant oil reservoir. A non-asbestos graphite gasketed, oil-tight housing encloses the timing gears. Drive end bearings are grease lubricated through fittings. Lip-type seals prevent oil and grease from entering the impeller chamber

- *Superior gear and bearing lubrication is assured at all operating conditions with minimal maintenance*

9 High strength steel drive shaft is extended for V-belt drive or direct connection

- *Provides greater blower durability and installation flexibility*

Available with Mechanical Gas Seals

The Legend design accommodates mechanical gas seals for critical gas applications with proven results based on a large installed base

- *This field proven seal design allows trouble-free operation in critical gas applications*



6HVR BHC 7MVP BHC 8HVP BHC

The Sutorbilt Legend Design

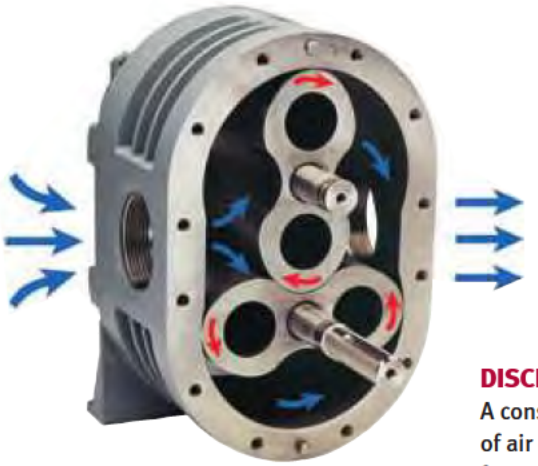

INTAKE
A constant volume of air or gas is drawn into the cylinder by the action of the turning impellers.

DISCHARGE
A constant volume of air or gas is forced out through the discharge port.

TRANSFER
A constant volume of trapped air or gas is transferred around the cylinder to the discharge port.

The Sutorbilt PD Cycle

- Two figure-eight impellers turn in opposite directions within a machined housing
- Transferring a constant volume of air or gas from inlet to discharge with every rotation of the blower drive shaft
- No lubrication within the cylinder is required
- Rotating components are held in close tolerance do not contact each other
- Impeller positioning is maintained by precision timing gears affixed to each impeller shaft
- Gear and bearing lubrication occurs externally to the cylinder assuring clean, oil-free gas delivery under all operating conditions

Universal Foot & Flex-Mount™ Design Provides Maximum Installation Versatility

- 3–6" R versions feature the "universal" mounting feet which allow them to be mounted in vertical and horizontal configurations
- 2", 7" & 8" P versions feature Flex-Mount™ design creating interchangeability on existing and new applications



Universal Foot



Horizontal Configuration, Right Hand Drive



Vertical Configuration, Bottom Hand Drive



Horizontal Configuration, Left Hand Drive



Vertical Configuration, Top Hand Drive

State-of-the-Art Quality

The Gardner Denver line of Sutorbilt Legend blowers and vacuum pumps are engineered and manufactured under strict ISO 9001:2000 quality standards in our 330,000 square feet state-of-the-art facility in Sedalia, MO (photo below)

- Gardner Denver makes it a priority to invest in highly skilled people who take pride in producing quality products
- Our Flexible Machining System (FMS) assures consistent production of the highest quality Legend components
- Attention to detail is found throughout the manufacturing process such as utilizing advanced coordinate measuring equipment (photo A)
- Legend components are subjected to quality inspections before assembly
- Prior to shipment, every Legend is tested against rigid standards using our computer automated testing stations (photo B)

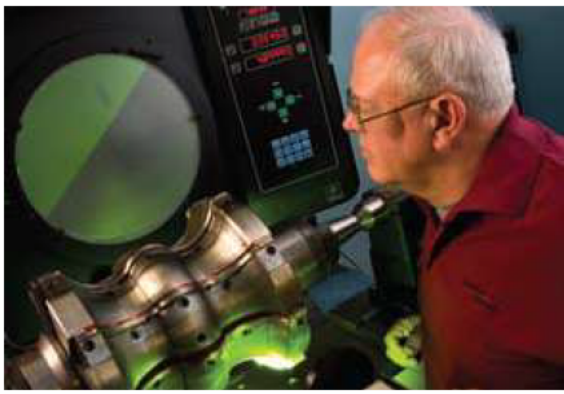



Photo A



Photo B



Sutorbilt Legend Pressure Performance Data

LOW PRESSURE UNITS

SIZE	DIA. INLET & OUTLET	DISPL. CU. FT./REV.	RPM	2 PSIG		3 PSIG		4 PSIG		5 PSIG		6 PSIG		7 PSIG	
				CFM	BHP	CFM	BHP	CFM	BHP	CFM	BHP	CFM	BHP	CFM	BHP
2LP 2LVP	2"-S	0.035	2,800	76	1.1	71	1.6	67	2.1	63	2.5	59	3.0	56	3.5
			3,250	91	1.3	86	1.8	82	2.4	79	2.9	75	3.4	72	4.0
			3,560	102	1.4	97	2.0	93	2.6	89	3.2	86	3.7	83	4.3
			5,275	162	2.0	157	2.8	153	3.7	149	4.6	146	5.3	143	6.1
3LR 3LVR	2½"-S	0.104	1,760	149	1.9	142	2.8	135	3.7	130	4.5	124	5.2	120	6.1
			2,265	202	2.4	194	3.5	188	4.7	182	5.6	177	6.7	172	7.8
			2,770	254	2.9	247	4.3	240	5.5	235	6.8	230	8.2	225	9.6
			3,600	341	3.7	333	5.3	327	7.1	321	8.9	316	10.6	311	12.4
4LR 4LVR	3"-S	0.170	1,760	253	3.0	243	4.5	234	5.7	227	7.1	220	8.5	213	9.9
			2,190	326	3.7	316	5.3	307	7.1	300	8.8	293	10.6	286	12.4
			2,620	400	4.4	389	6.3	381	8.4	373	10.6	366	12.7	360	14.8
			3,600	566	5.8	556	8.7	547	11.6	539	14.5	533	17.4	526	20.3
5LR 5LVR	4"-S	0.350	1,500	463	5.2	449	7.5	438	10.0	427	12.4	418	14.9	409	17.4
			1,760	554	5.8	540	8.8	529	11.7	518	14.6	509	17.5	500	20.4
			2,100	673	7.0	659	10.5	648	13.9	637	17.4	628	20.9	619	24.4
			2,850	936	9.5	922	14.2	910	18.9	900	23.6	890	28.4	882	33.1
6LR 6LVR	6"-F	0.718	1,170	739	8.0	716	11.9	697	15.9	680	19.9	664	23.9	650	27.9
			1,760	1,162	12.0	1,139	18.0	1,120	24.0	1,103	29.9	1,088	35.9	1,074	41.9
			1,930	1,284	13.1	1,261	19.7	1,242	26.3	1,225	32.8	1,210	39.4	1,196	46.0
			2,350	1,586	16.0	1,563	24.0	1,544	32.0	1,527	40.0	1,512	48.0	1,497	56.0
7LP 7LVP	8"-F	1.200	1,170	1,277	13.3	1,248	20.0	1,224	16.6	1,203	33.3	1,184	39.9		
			1,465	1,631	16.7	1,602	25.0	1,578	33.3	1,557	41.7	1,538	50.0		
			1,760	1,985	20.0	1,956	30.0	1,932	40.0	1,911	50.1	1,892	60.1		
			2,050	2,333	23.3	2,304	35.0	2,280	46.6	2,259	58.3	2,240	70.0		
8LP 8LVP	10"-F	1.740	880	1,366	14.5	1,329	21.8	1,298	29.0	1,271	36.3	1,246	43.5		
			1,170	1,871	19.3	1,834	28.9	1,803	38.6	1,775	48.2	1,750	57.9		
			1,375	2,228	22.7	2,191	34.0	2,159	45.4	2,132	56.7	2,107	68.0		
			1,800	2,967	29.7	2,930	44.5	2,899	59.4	2,871	74.2	2,847	89.1		

MEDIUM PRESSURE UNITS

SIZE	DIA.INLET & OUTLET	DISPL.CU. FT./REV.	RPM	7 PSIG		9 PSIG		10 PSIG		12 PSIG		13 PSIG		14 PSIG	
				CFM	BHP	CFM	BHP	CFM	BHP	CFM	BHP	CFM	BHP	CFM	BHP
2MP 2MVP	1"-S	0.017	2,800	25	1.7	22	2.1								
			3,250	33	1.9	30	2.5	28	2.7						
			3,560	38	2.1	35	2.7	34	3.0						
			5,275	67	3.1	64	3.9	63	4.4	60	5.1				
3MR 3MVR	2"-S	0.060	1,760	64	3.6	59	4.6								
			2,265	95	4.6	89	5.8	87	6.4						
			2,770	125	5.5	119	7.1	117	7.9	112	9.5				
			3,600	175	7.2	169	9.2	167	10.2	162	12.3				
4MR 4MVR	2½"-S	0.117	1,760	144	6.8	136	8.8	132	9.8						
			2,190	194	8.5	186	10.9	182	12.1						
			2,620	245	10.2	236	13.1	233	14.5						
			3,600	359	14.0	351	18.0	347	20.0						
5MR 5MVR	4"-S	0.210	1,500	237	10.5	227	13.4	222	14.9	213	17.9	209	19.4		
			1,760	292	12.3	281	15.8	277	17.5	268	21.0	263	22.8		
			2,100	363	14.6	353	18.8	348	20.9	339	25.1	335	27.2		
			2,850	521	19.9	510	25.5	506	28.4	497	34.0	493	36.9		
6MR 6MVR	5"-S	0.383	1,170	332	14.9	316	19.1	309	21.2	296	25.5	289	27.6	283	29.7
			1,760	558	22.4	542	28.8	535	32.0	522	38.3	515	41.5	509	44.7
			1,930	622	24.5	607	31.5	600	35.0	587	42.0	580	45.5	574	49.1
			2,350	784	29.9	768	38.4	761	42.7	748	51.2	741	55.5	735	59.7
7MP 7MVP	6"-F	0.733	1,170	693	28.5	671	36.6	661	40.7						
			1,465	909	35.6	887	45.8	877	50.9						
			1,760	1,125	42.8	1,103	55.0	1,093	61.1						
			2,050	1,338	49.9	1,316	64.1	1,306	71.2						
8MP 8MVP	8"-F	1.040	880	709	30.4	681	39.0	669	43.4						
			1,170	1,011	40.4	983	51.9	970	57.7						
			1,375	1,224	47.4	1,196	61.0	1,183	67.8						
			1,800	1,666	62.1	1,638	79.9	1,625	88.7						

HIGH PRESSURE UNITS

SIZE	DIA. INLET & OUTLET	DISPL. CU. FT./REV.	RPM	7 PSIG		8 PSIG		9 PSIG		11 PSIG		13 PSIG		15 PSIG	
				CFM	BHP	CFM	BHP	CFM	BHP	CFM	BHP	CFM	BHP	CFM	BHP
3HR 3HVR	1¼"-S	0.045	1,760	46	2.6	44	3.0	41	3.4						
			2,265	69	3.4	66	3.9	64	4.3	60	5.3				
			2,770	91	4.1	89	4.7	87	5.3	83	6.5				
			3,600	129	5.4	126	6.1	124	6.9	120	8.4	117	10.0	113	11.5
4HR 4HVR	1½"-S	0.069	1,760	80	4.0	77	4.6	74	5.2						
			2,190	110	5.0	107	5.7	104	6.4	99	7.9				
			2,620	139	6.0	137	6.9	134	7.7	129	9.4	124	11.1		
			3,600	207	8.2	204	9.4	201	10.6	196	13.0	192	15.3	188	17.7
5HR 5HVR	2½"-S	0.140	1,500	154	7.0	151	8.0	147	9.0	140	10.9				
			1,760	191	8.2	187	9.3	183	10.5	177	12.8	171	15.2	165	17.5
			2,100	238	9.8	235	11.1	231	12.5	224	15.3	218	18.1	213	20.9
			2,850	343	13.2	340	15.1	336	17.0	329	20.8	323	24.6	318	28.4
6HR 6HVR	3"-S	0.227	1,170	188	8.8	182	10.1	177	11.3	168	13.8	159	16.4		
			1,760	321	13.3	316	15.1	311	17.0	302	20.8	293	24.6	285	28.4
			1,930	360	14.5	355	16.6	350	18.7	340	22.8	332	27.0	324	31.1
			2,350	455	17.7	450	20.2	445	22.8	436	27.8	427	32.9	419	37.9
7HP 7HVP	4"-S	0.367	1,170	332	14.2	326	16.3	319	18.3	308	22.4	297	26.5	287	30.5
			1,465	441	17.8	434	20.4	428	22.9	416	28.0	405	33.1	396	38.2
			1,760	549	21.4	542	24.5	536	27.6	524	33.7	514	39.8	504	45.9
			2,050	655	25.0	649	28.5	642	32.1	631	39.2	620	46.4	610	53.5
8HP 8HVP	4"-S	0.566	880	363	16.5	354	18.9	345	21.2	329	26.0	315	30.7	301	35.4
			1,170	528	22.0	518	25.1	509	28.3	493	34.5	479	40.8	465	47.1
			1,375	644	25.8	634	29.5	626	33.2	609	40.6	595	48.0	581	55.3
			1,800	884	33.8	875	38.6	866	43.5	850	53.1	835	62.8	822	72.4

Performance based on inlet air at standard temperature of 68°F, an ambient pressure of 14.7 psia and 36% relative humidity. For performance at non-standard conditions, contact your authorized Gardner Denver representative. S=Screwed connections std. NPT. F=flange connections. Intake and outlet pipe connections are same type and size.

Sutorbilt Legend Vacuum Performance Data

LOW VACUUM UNITS

SIZE	DIA. INLET & OUTLET	DISPL. CU. FT./REV.	RPM	2 "Hg		4 "Hg		8 "Hg		10 "Hg		12 "Hg		14 "Hg	
				CFM	BHP	CFM	BHP	CFM	BHP	CFM	BHP	CFM	BHP	CFM	BHP
2LP 2LVP	2"-S	0.035	2,800	82	0.7	74	1.1	61	2.0	55	2.5				
			3,250	98	0.7	90	1.3	77	2.3	71	2.8	64	3.4		
			3,560	108	0.8	101	1.4	88	2.5	82	3.1	75	3.7		
			4,165	130	0.9	122	1.6	109	2.9	103	3.6	96	4.3		
			5,275	168	1.1	161	1.9	148	3.6	142	4.5	135	5.2	128	6.0
3LR 3LVR	2½"-S	0.104	1,760	158	1.1	147	1.9	128	3.6	118	4.5	108	5.1		
			2,265	211	1.3	200	2.4	180	4.6	171	5.5	160	6.6		
			2,770	264	1.5	252	2.9	233	5.4	223	6.7	213	8.1		
			3,600	350	1.9	338	3.7	319	7.0	309	8.7	299	10.5	288	12.2
4LR 4LVR	3"-S	0.170	1,760	266	1.6	250	3.0	224	5.6	211	7.0	197	8.4		
			2,190	339	1.9	323	3.7	297	6.9	284	8.7	270	10.4		
			2,620	412	2.3	396	4.3	370	8.3	357	10.4	343	12.4	329	14.5
			3,600	579	3.1	563	5.7	537	11.4	524	14.3	510	17.1	495	20.0
5LR 5LVR	4"-S	0.350	1,500	480	2.6	459	5.1	424	9.8	406	12.2	388	14.7		
			1,760	571	3.1	550	5.7	515	11.5	497	14.3	479	17.2	459	20.1
			2,100	690	3.6	669	6.8	634	13.7	616	17.1	598	20.5	578	24.0
			2,850	953	4.8	932	9.3	896	18.6	879	23.2	860	27.9	840	32.5
6LR 6LVR	6"-F	0.718	1,170	766	4.1	732	7.8	674	15.7	645	19.6	615	23.5		
			1,760	1,190	5.9	1,115	11.8	1,097	23.5	1,068	29.4	1,038	35.3	1,005	41.2
			1,930	1,312	6.5	1,278	12.9	1,219	25.8	1,191	32.3	1,160	38.7	1,127	45.2
			2,350	1,614	7.9	1,579	15.7	1,521	31.4	1,492	39.3	1,462	47.2	1,429	55.0
7LP 7LVP	8"-F	1.200	1,170	1,312	6.5	1,268	13.1	1,195	26.2	1,159	32.7	1,121	39.2		
			1,465	1,666	8.2	1,622	16.4	1,549	32.8	1,513	40.9	1,475	49.1		
			1,760	2,020	9.8	1,976	19.7	1,903	39.3	1,867	49.2	1,829	59.0		
			2,050	2,368	11.5	2,324	22.9	2,251	45.8	2,215	57.3	2,177	68.7		
8LP 8LVP	10"-F	1.740	880	1,411	7.1	1,355	14.3	1,261	28.5	1,214	35.7	1,165	42.8		
			1,170	1,916	9.5	1,860	19.0	1,766	37.9	1,719	47.4	1,670	56.9		
			1,375	2,273	11.1	2,217	22.3	2,122	44.6	2,076	55.7	2,026	66.9		
			1,800	3,012	14.6	2,953	29.2	2,862	58.4	2,815	72.9	2,765	87.6		

MEDIUM VACUUM UNITS

SIZE	DIA. INLET &OUTLET	DISPL. CU. FT./REV.	RPM	6 "Hg		10 "Hg		12 "Hg		14 "Hg		15 "Hg		16 "Hg	
				CFM	BHP	CFM	BHP	CFM	BHP	CFM	BHP	CFM	BHP	CFM	BHP
2MP 2MVP	1"-S	0.017	2,800	31	0.8	24	1.2								
			3,250	39	0.9	32	1.4								
			3,560	44	0.9	37	1.5	34	1.8						
			4,165	54	1.1	48	1.7	44	2.1	40	2.4				
			5,275	73	1.4	67	2.2	63	2.6	59	3.0	57	3.2		
3MR 3MVR	2"-S	0.060	1,760	76	1.6	63	2.6	57	3.1						
			2,265	106	2.0	93	3.3	87	3.9						
			2,770	136	2.4	124	4.0	117	4.7	110	5.4				
			3,600	186	3.1	174	5.0	167	6.0	160	7.0	156	7.5		
4MR 4MVR	2½"-S	0.117	1,760	161	3.0	142	4.9	132	5.8						
			2,190	211	3.7	193	6.0	183	7.2						
			2,620	262	4.4	243	7.1	233	8.6	222	10.0				
			3,600	376	5.9	358	9.8	348	11.8	337	13.7	331	14.7	325	15.7
5MR 5MVR	4"-S	0.210	1,500	258	4.5	235	7.3	223	8.8	209	10.3				
			1,760	313	5.2	290	8.6	277	10.3	264	12.1				
			2,100	384	6.2	361	10.3	349	12.3	335	14.4	328	15.4		
			2,850	542	8.4	519	13.9	506	16.7	493	19.5	485	20.9	477	22.3
6MR 6MVR	5"-S	0.383	1,170	363	6.3	328	10.4	310	12.5	290	14.6	279	15.7	267	16.7
			1,760	589	9.4	554	15.7	536	18.8	516	22.0	505	23.5	493	25.1
			1,930	655	10.3	619	17.2	601	20.7	581	24.1	570	25.8	558	27.5
			2,350	815	12.6	780	21.0	762	25.2	741	29.3	731	31.4	719	33.5
7MP 7MVP	6"-F	0.733	1,170	738	12.0	688	20.0	662	24.0	633	28.0	618	30.0	601	32.0
			1,465	954	15.0	904	25.0	878	30.0	850	35.0	834	37.5	817	40.0
			1,760	1,170	18.0	1,121	30.0	1,094	36.1	1,065	42.1	1,050	45.1	1,034	48.1
			2,050	1,383	21.0	1,333	35.0	1,307	42.0	1,278	49.0	1,263	52.5	1,246	56.0
8MP 8MVP	8"-F	1.040	880	765	12.8	703	21.3	670	25.6	634	29.8	615	32.0	594	34.1
			1,170	1,067	17.0	1,005	28.3	972	34.0	936	39.7	917	42.5	896	45.3
			1,375	1,280	20.0	1,218	33.3	1,185	40.0	1,149	46.6	1,130	50.0	1,109	53.3
			1,800	1,722	26.2	1,660	43.6	1,627	52.3	1,591	61.0	1,572	65.4	1,551	69.7

HIGH VACUUM UNITS

SIZE	DIA. INLET & OUTLET	DISPL. CU. FT./REV.	RPM	6 "Hg		8 "Hg		12 "Hg		14 "Hg		15 "Hg		16 "Hg	
				CFM	BHP	CFM	BHP	CFM	BHP	CFM	BHP	CFM	BHP	CFM	BHP
3HR 3HVR	1¼"-S	0.045	1,760	55	1.1	50	1.5	40	2.2						
			2,265	78	1.4	73	1.9	62	2.8						
			2,770	100	1.7	95	2.3	85	3.5	79	4.1	76	4.4		
			3,600	138	2.3	133	3.0	122	4.5	117	5.3	113	5.7	110	6.0
4HR 4HVR	1½"-S	0.069	1,760	91	1.7	85	2.3	72	3.4						
			2,190	121	2.1	115	2.8	102	4.2	95	4.9	91	5.3		
			2,620	151	2.5	144	3.4	132	5.1	124	5.9	120	6.3		
			3,600	218	3.5	212	4.6	199	6.9	192	8.1	188	8.7	184	9.3
5HR 5HVR	2½"-S	0.140	1,500	170	2.9	161	3.9	144	5.9	134	6.8				
			1,760	206	3.4	198	4.6	180	6.9	171	8.0	165	8.6		
			2,100	254	4.1	245	5.5	228	8.2	218	9.6	213	10.3		
			2,850	359	5.6	350	7.4	333	11.2	323	13.0	318	14.0	312	14.9
6HR 6HVR	3"-S	0.227	1,170	209	3.7	197	4.8	173	7.4	159	8.7	152	9.3		
			1,760	343	5.6	331	7.4	307	11.2	293	13.0	286	14.0	278	14.9
			1,930	381	6.1	370	8.2	345	12.2	332	14.3	325	15.3	317	16.3
			2,350	477	7.5	165	9.9	441	14.9	427	17.4	420	18.6	412	19.9
7HP 7HVP	4"-S	0.367	1,170	359	6.0	344	8.0	314	12.0	297	14.0	288	15.0	278	16.0
			1,465	467	7.5	453	10.0	422	15.0	406	17.5	396	18.8	387	20.0
			1,760	575	9.0	561	12.0	531	18.1	514	21.1	505	22.6	495	24.1
			2,050	682	10.5	667	14.0	637	21.0	620	24.5	611	26.3	601	28.0
8HP 8HVP	4"-S	0.566	880	400	7.0	380	9.3	338	13.9	315	16.2	302	17.4		
			1,170	564	9.3	544	12.3	502	18.5	479	21.6	466	23.1	453	24.7
			1,375	680	10.9	660	14.5	618	21.7	595	25.4	582	27.2	569	29.0
			1,800	921	14.2	901	19.0	859	28.5	835	33.2	823	35.6	809	38.0

Sutorbilt Legend Dimensional Data

Horizontal Configurations

SIZE	WT.	CONN.	A	B	C	D	E	F	G	H	J	K	L	M	N	O	P	R	S	T	U
2M	72	S	5.00	2.00	2.00	6.36	3.25	3.75	2.75	7.00	9.25	1.00	5.16	10.00	2.76	1.97	1.62	0.19	0.620	0.13	0.44
2L	86	S	7.00	3.00	2.00	6.36	3.25	3.75	2.75	7.00	9.25	2.00	6.16	12.00	4.76	1.97	1.62	0.19	0.620	0.13	0.44
3H	88	S	6.75	2.69	2.68	7.75	3.88	5.00	3.50	8.88	11.26	1.25	5.86	12.05	3.50	2.05	1.62	0.19	0.750	0.25	0.62 x 1.12
3M	110	S	7.62	3.13	2.68	7.75	3.88	5.00	3.50	8.88	11.26	2.00	6.30	12.92	4.38	2.05	1.62	0.19	0.750	0.25	0.62 x 1.12
3L	132	S	10.25	4.44	2.68	7.75	3.88	5.00	3.50	8.88	11.26	2.50	7.61	15.55	7.00	2.05	1.62	0.19	0.750	0.25	0.62 x 1.13
4H	138	S	7.24	3.00	3.00	8.25	4.19	6.25	4.00	10.44	12.38	1.50	6.91	13.74	4.00	2.39	1.62	0.19	0.875	0.38	0.5 x 0.75
4M	160	S	9.49	4.13	3.00	8.25	4.19	6.25	4.00	10.44	12.38	2.50	8.04	15.99	6.26	2.39	1.62	0.19	0.875	0.38	0.5 x 0.75
4L	182	S	11.99	5.38	3.00	8.25	4.19	6.25	4.00	10.44	12.38	3.00	9.29	18.49	8.76	2.39	1.62	0.19	0.875	0.38	0.5 x 0.75
5H	210	S	10.85	3.50	3.50	9.00	5.19	7.00	5.00	12.19	15.38	2.50	8.19	16.38	4.86	2.50	2.00	0.25	1.125	0.38	0.56 x 0.75
5M	232	S	12.85	4.50	3.50	9.00	5.19	7.00	5.00	12.19	15.38	4.00	9.19	18.38	6.86	2.50	2.00	0.25	1.125	0.38	0.56 x 0.75
5L	306	S	16.85	6.50	3.50	9.00	5.19	7.00	5.00	12.19	15.38	4.00	11.19	22.38	10.86	2.50	2.00	0.25	1.125	0.38	0.56 x 0.75
6H	318	S	9.76	3.94	4.00	16.50	6.00	8.75	6.00	14.75	18.00	3.00	9.18	18.57	5.76	2.94	2.00	0.31	1.375	0.50	0.75 x 1
6M	366	S	13.00	5.56	4.00	16.50	6.19	8.75	6.00	14.94	18.00	5.00	10.80	21.81	9.00	2.94	2.00	0.31	1.375	0.50	0.75 x 1
6L	538	F	20.00	9.06	4.00	16.50	7.50	8.75	6.00	16.25	18.00	6.00	14.31	28.82	16.00	2.94	2.00	0.31	1.375	0.50	0.75 x 1
7H	482	S	12.00	4.63	5.50	15.00	9.69	11.00	7.00	20.69	22.00	4.00	10.00	21.03	5.74	3.21	2.50	0.38	1.562	0.50	0.75 x 1
7M	638	F	17.50	7.38	5.50	15.00	8.50	11.00	7.00	19.50	22.00	6.00	12.75	26.53	11.24	3.21	2.50	0.38	1.562	0.50	0.75 x 1
7L	770	F	24.50	10.88	5.50	15.00	8.50	11.00	7.00	19.50	22.00	8.00	16.25	33.53	18.24	3.21	2.50	0.38	1.562	0.50	0.75 x 1
8H	736	S	13.50	5.75	6.00	16.00	10.00	12.50	8.00	22.50	25.25	4.00	11.69	23.85	7.76	3.86	2.50	0.38	1.750	0.50	0.75 x 1
8M	938	F	19.00	8.50	6.00	16.00	10.00	12.50	8.00	22.50	25.25	8.00	14.44	29.35	13.26	3.86	2.50	0.38	1.750	0.50	0.75 x 1
8L	1,170	F	27.00	12.50	6.00	16.00	10.00	12.50	8.00	22.50	25.25	10.00	18.44	37.35	21.26	3.86	2.50	0.38	1.750	0.50	0.75 x 1

S=Threaded connections standard NPT. F=flange connections. Inlet and outlet connections are the same type and size.
Dimensions are in inches. Weights are in pounds and include shipping cartons or pallets and are approximate.

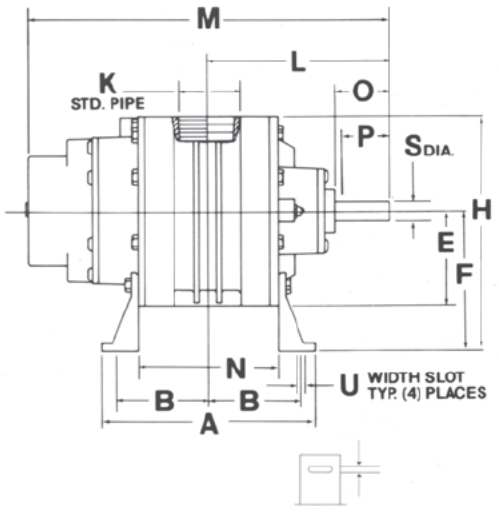

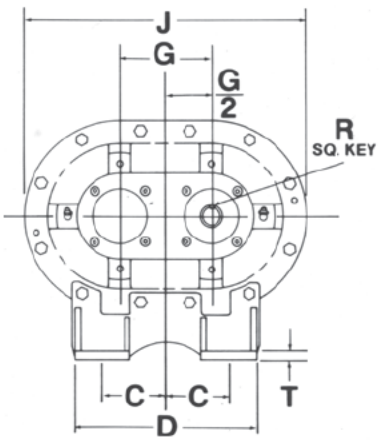

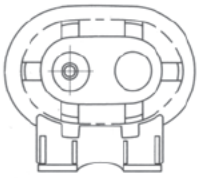

LHC
LEFT HAND CENTRAL
(OPTIONAL ASSEMBLY)

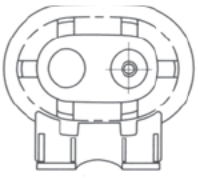

RHC
RIGHT HAND CENTRAL
(STANDARD ASSEMBLY)

CENTER TIMED FOR ROTATION
IN EITHER DIRECTION

Vertical Configurations

SIZE	WT.	CONN.	A	B	C	D	E	F	G	H	J	K	L	M	N	O	P	R	S	T	U
2MV	72	S	5.00	2.00	1.50	5.60	3.50	4.88	6.25	9.50	6.50	1.00	5.16	10.00	2.76	1.97	1.62	0.19	0.6200	0.13	0.44
2LV	86	S	7.00	3.00	1.50	5.60	3.50	4.88	6.25	9.50	6.50	2.00	6.16	12.00	4.76	1.97	1.62	0.19	0.6200	0.13	0.44
3HV	88	S	6.75	2.69	2.68	7.75	4.50	6.25	8.00	11.88	7.76	1.25	5.86	12.05	3.50	2.05	1.62	0.19	0.7500	0.25	0.62 x 1.12
3MV	110	S	7.62	3.13	2.68	7.75	4.50	6.25	8.00	11.88	7.76	2.00	6.30	12.92	4.36	2.05	1.62	0.19	0.7500	0.25	0.62 x 1.12
3LV	132	S	10.25	4.44	2.68	7.75	4.50	6.25	8.00	11.88	7.76	2.50	7.61	15.55	7.00	2.05	1.62	0.19	0.7500	0.25	0.62 x 1.12
4HV	138	S	7.24	3.00	3.00	8.25	4.50	6.50	8.50	12.69	8.40	1.50	6.91	13.74	4.00	2.39	1.62	0.19	0.8750	0.38	0.5 x 0.75
4MV	160	S	9.49	4.13	3.00	8.25	4.50	6.50	8.50	12.69	8.40	2.50	8.04	15.99	6.26	2.39	1.62	0.19	0.8750	0.38	0.5 x 0.75
4LV	182	S	11.99	5.38	3.00	8.25	4.50	6.50	8.50	12.69	8.40	3.00	9.29	18.49	8.76	2.39	1.62	0.19	0.8750	0.38	0.5 x 0.75
5HV	210	S	10.85	3.50	3.50	9.00	5.50	8.00	10.50	15.85	10.38	2.50	8.19	16.38	4.86	2.50	2.00	0.25	1.1250	0.38	0.56 x 0.75
5MV	232	S	12.85	4.50	3.50	9.00	5.50	8.00	10.50	15.85	10.38	4.00	9.19	18.38	6.86	2.50	2.00	0.25	1.1250	0.38	0.56 x 0.75
5LV	306	S	16.85	6.50	3.50	9.00	5.50	8.00	10.50	15.85	10.38	4.00	11.19	22.38	10.86	2.50	2.00	0.25	1.1250	0.38	0.56 x 0.75
6HV	318	S	9.76	3.94	4.00	10.50	8.75	11.75	14.75	20.75	12.00	3.00	9.18	18.57	5.76	2.94	2.00	0.31	1.3750	0.50	0.75 x 1
6MV	366	S	13.00	5.56	4.00	10.50	8.75	11.75	14.75	20.80	12.38	5.00	10.80	21.81	9.00	2.94	2.00	0.31	1.3750	0.50	0.75 x 1
6LV	538	F	20.00	9.06	4.00	10.50	8.75	11.75	14.75	20.75	15.00	6.00	14.31	28.81	9.00	2.93	2.00	0.31	1.3750	0.50	0.75 x 1
7HV	482	S	12.00	4.62	5.50	14.04	11.00	14.50	18.00	25.50	19.38	4.00	10.00	21.03	5.74	3.21	2.50	0.38	1.5620	0.50	0.75 x 1
7MV	638	F	17.50	7.37	5.50	14.04	11.00	14.50	18.00	25.50	17.00	6.00	12.75	26.53	11.24	3.21	2.50	0.38	1.5620	0.50	0.75 x 1
7LV	770	F	24.50	10.87	5.50	14.04	11.00	14.50	18.00	25.50	17.00	8.00	16.25	33.53	18.24	3.21	2.50	0.38	1.5620	0.50	0.75 x 1
8HV	736	S	13.50	5.75	6.00	16.00	12.50	16.50	20.50	29.12	20.00	4.00	11.69	23.85	7.76	3.86	2.50	0.38	1.7500	0.50	0.75 x 1
8MV	938	F	19.00	8.50	6.00	16.00	12.50	16.50	20.50	29.12	20.00	8.00	14.44	29.35	13.26	3.86	2.50	0.38	1.7500	0.50	0.75 x 1
8LV	1,170	F	27.00	12.50	6.00	16.00	12.50	16.50	20.50	29.12	20.00	10.00	18.44	37.35	21.26	3.86	2.50	0.38	1.7500	0.50	0.75 x 1

S=Threaded connections standard NPT. F=flange connections. Inlet and outlet connections are the same type and size.
Dimensions are in inches. Weights are in pounds and include shipping cartons or pallets and are approximate.

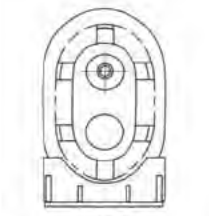

THC
TOP HAND CENTRAL
(OPTIONAL ASSEMBLY)

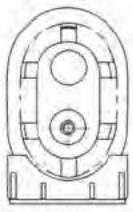

BHC
BOTTOM HAND CENTRAL
(STANDARD ASSEMBLY)

CENTER TIMED FOR ROTATION
IN EITHER DIRECTION

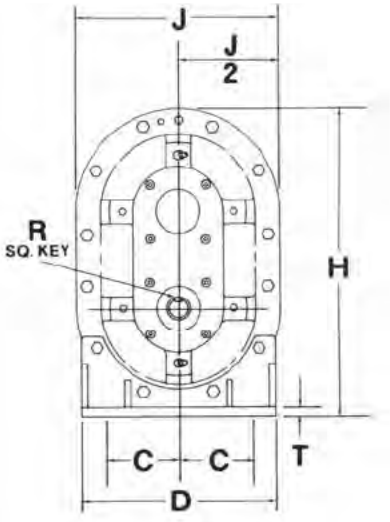

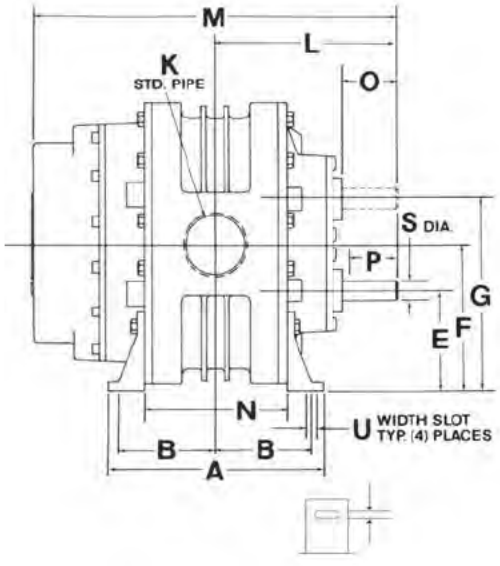

Genuine Gardner Denver Parts & Lubricants

- Maintain the Gardner Denver performance advantage and reliability with Genuine GD Replacement Parts available through authorized sales and service representatives
- Protect your Gardner Denver investment with AEON® PD, the only lubricant specially formulated for all blowers in any environment
  - **Now available:**
    - **›› AEON® PD-XD (eXtreme Duty)**
    - **›› Designed specifically for high ambient and high discharge temperature applications**
  - Also available:
    - ›› AEON® PD (standard applications)
    - ›› AEON® PD-FG (Food Grade)







Retain your Gardner Denver advantage with Genuine Replacement Parts

- Replacement parts incorporate the most recent design upgrades
- All parts meet original manufacturing specifications and tolerances for guaranteed fit and function
- Pre-packaged overhaul kits with detailed service manuals are available from your local authorized Gardner Denver distributor

Gardner Denver®

www.GardnerDenverProducts.com pd.blowers@gardnerdenver.com

Gardner Denver, Inc. 1800 Gardner Expressway, Quincy, IL 62305
Telephone: (800) 682-9868 FAX: (217) 221-8780

Member

©2009 Gardner Denver, Inc. Printed in U.S.A. PD-SB-L 4th Ed. 10/09

Please recycle after use.

Gardner Denver

SUTORBILT® LEGEND®
MODEL 7M
P-VERSION GREASE
VACUUM PERFORMANCE CURVE
INLET AIR AT 68 DEG. F, AMBIENT PRESSURE 14.7 PSIA, 36% RH
DISPLACEMENT 0.733 FT^3/REV

C. Emery Nelson, Inc.
7631 Commerce Street, Hamel, MN 55340
Ph: 763/ 420-3844 Fax: 763/420-2542

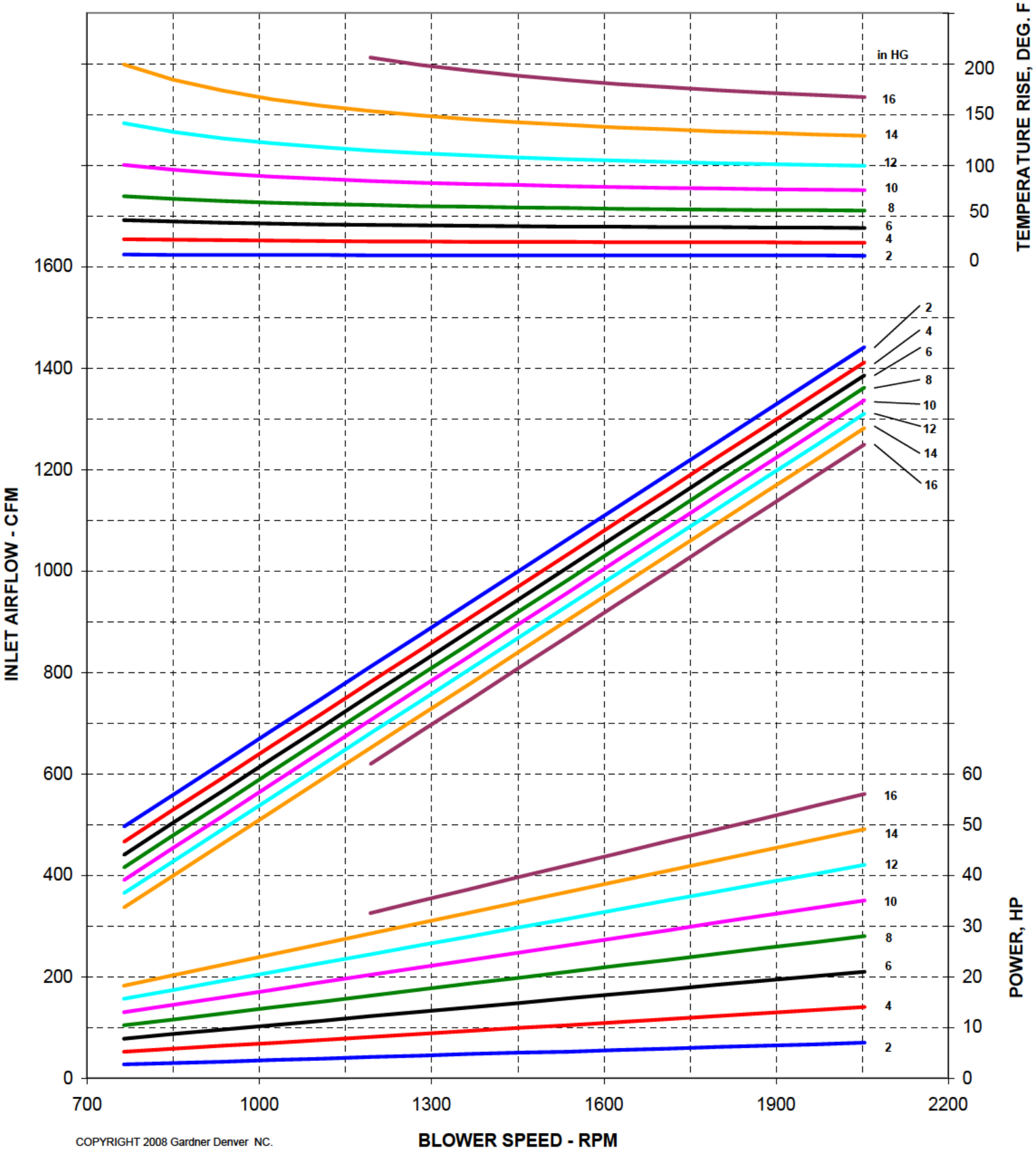

COPYRIGHT 2008 Gardner Denver NC.

Gardner Denver

SUTORBILT® LEGEND®
MODEL 7M
P-VERSION GREASE
PRESSURE PERFORMANCE CURVE
INLET AIR AT 68 DEG. F, AMBIENT PRESSURE 14.7 PSIA, 36% RH
DISPLACEMENT 0.733 FT^3/REV

C.Emery Nelson, Inc.
7631 Commerce Street, Hamel, MN 55340
Ph: 763/420-3844 Fax: 763/420-2342

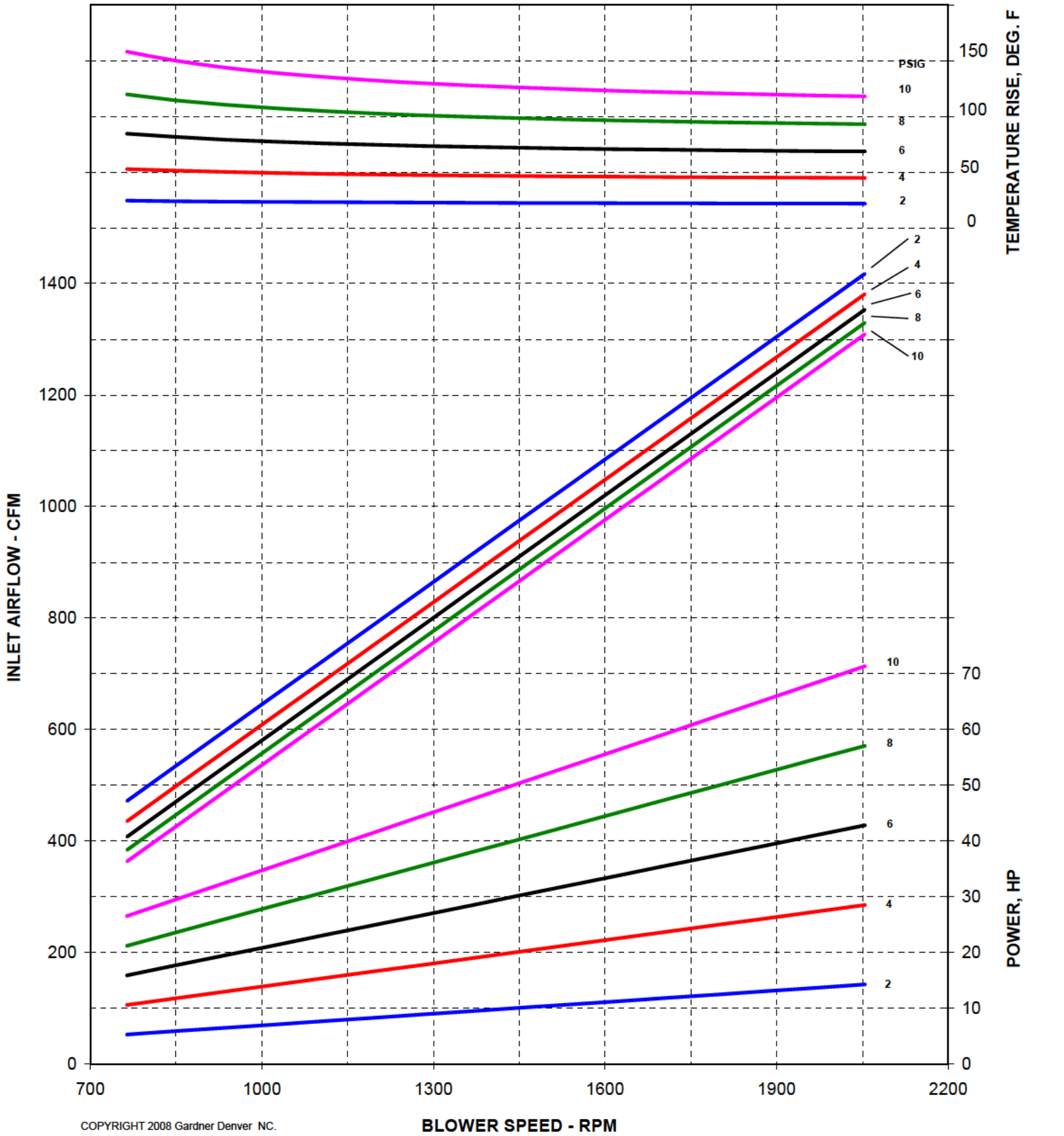

COPYRIGHT 2008 Gardner Denver NC.

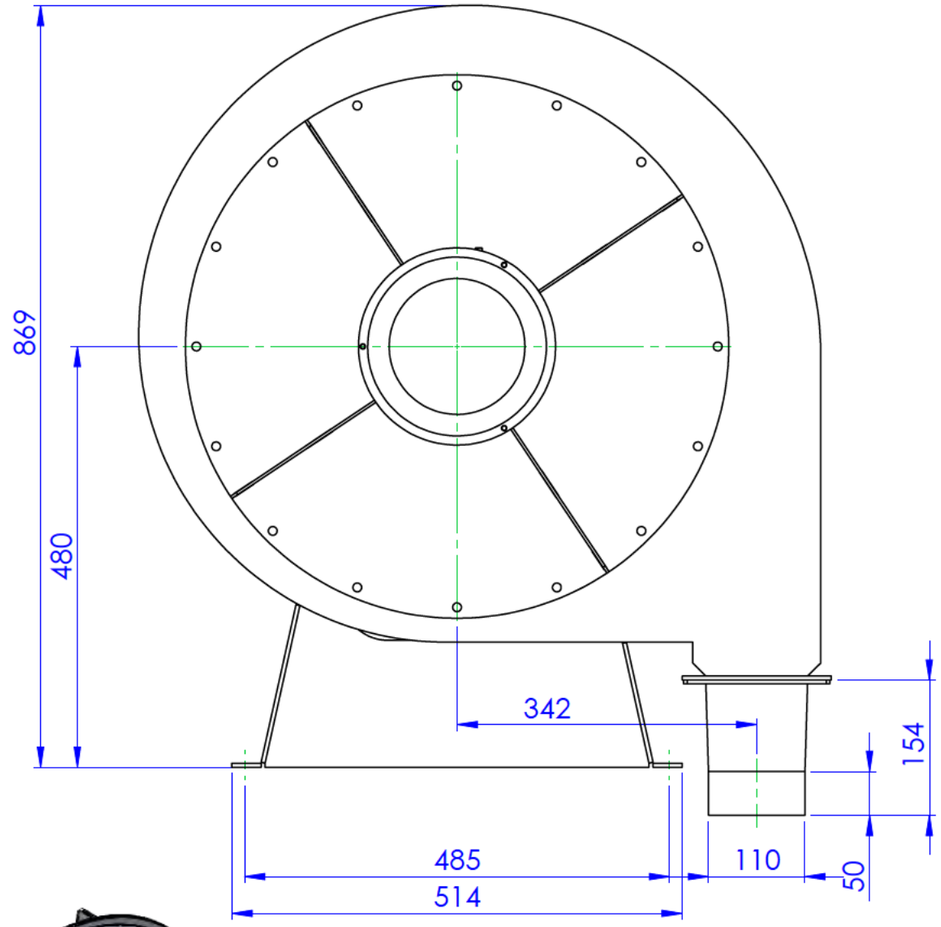

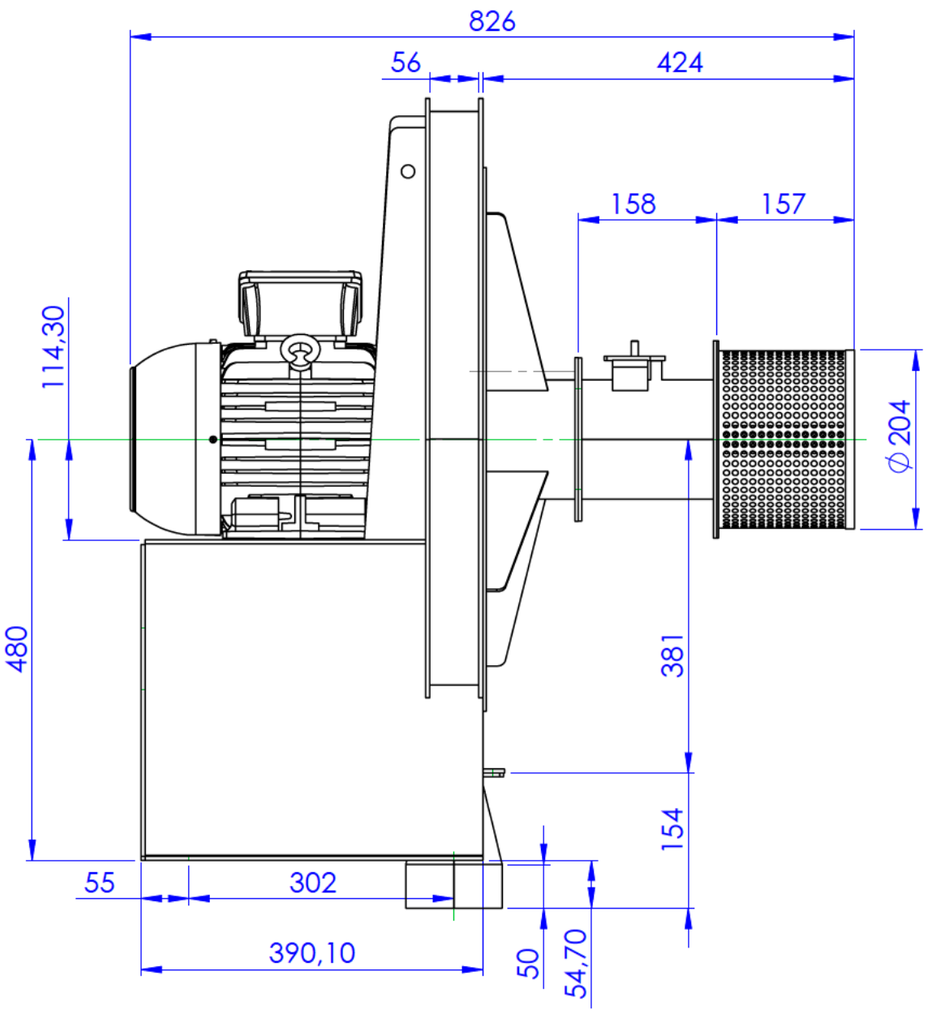

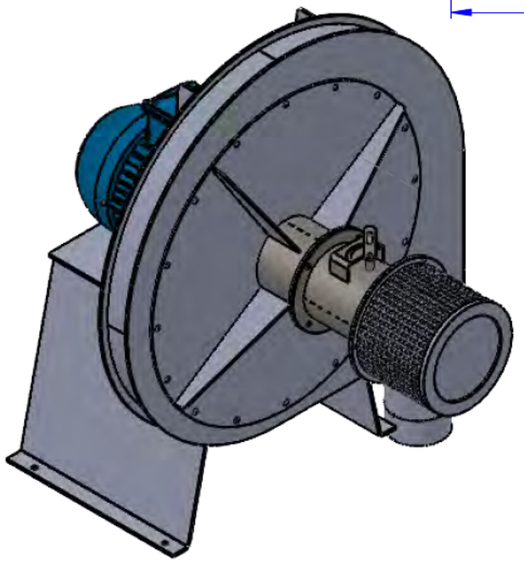

Especificações Técnicas do produto

Motor Eletrico de Indução Trifásica WEG.
Ventilador Centrifugo VHF-100
Potência: 5CV
Tensão: 480V
Nº de Polos: 2
Rotação Nominal: 3485RPM
Classe de Isolação: F
Classe de Proteção: IP-55
Arranjo Construtivo: 4SWSI
Posição Boca de Saída: CCW-180

Nota:
Pintura: AZUL RAL 5007

Temperatura: 20°C
Altitude: 0m
Vazão Máxima : 1560 m³/h
Pressão Máxima : 798 mmH2O

ESCALA 1 : 5

TOLERÂNCIAS NÃO ESPECIFICADAS CONFORME NBR-ISO 2768-V DIMENSÕES EM MILÍMETROS		Indústria Brasileira de Máquinas Ltda		REBARBAR E QUEBRAR ARESTAS AGUDAS	NÃO MUDAR A ESCALA DO DESENHO — REVISÃO A
Afastamentos admissíveis para intervalo de dimensão básica		Cliente: RMC²			IBRAM- Industria Brasileira de Máquinas RUA FORTE DO ARAXÁ 105 CEP 08340-170 BRASIL- SÃO PAULO -SP WWW.IBRAM.IND.BR VENDAS@IBRAM.IND.BR CAD2@IBRAM IND.BR +55 11 2919-3966 — 38 ANOS
0.5 - 3	-----	Aplicação: VENTILADOR			TÍTULO: VHF-100 CCW.180 5CV 2P 480V 60Hz IP-55 C.L:F
3 - 6	± 0 5				
6 -30	± 1	DESENHO	DATA		
30 -120	± 1 5	Luis Mariano	08/08/2022	MATERIAL: Aço SAE 1020	DES. Nº VHF100F28O3Z35 — A3
120 - 400	± 2 5	APROVAÇÃO			
400 - 1000	± 4	Clóvis Ramos	08/08/2022		
1000 - 2000	± 6			PESO:	ESCALA 1 8 — FOLHA 1 DE 1

RITE-TEMP MFG.

MODEL: RTS-1604 SPEC

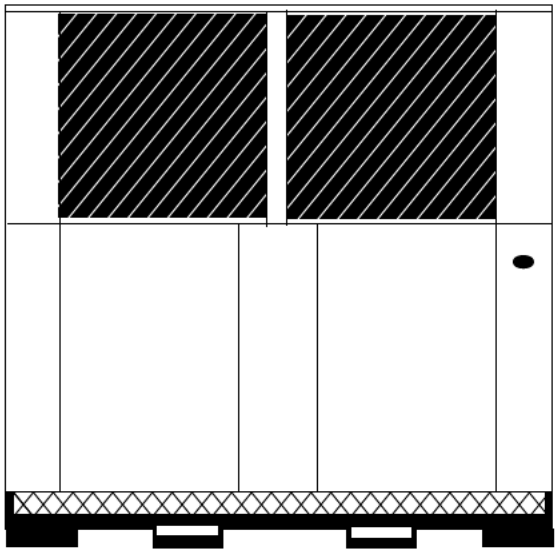

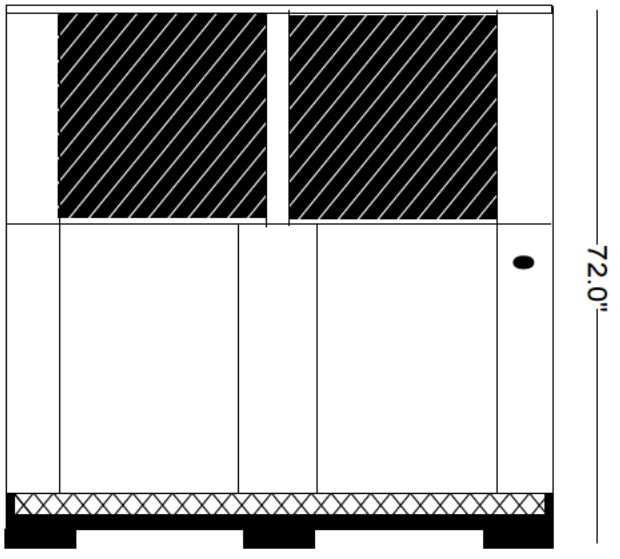

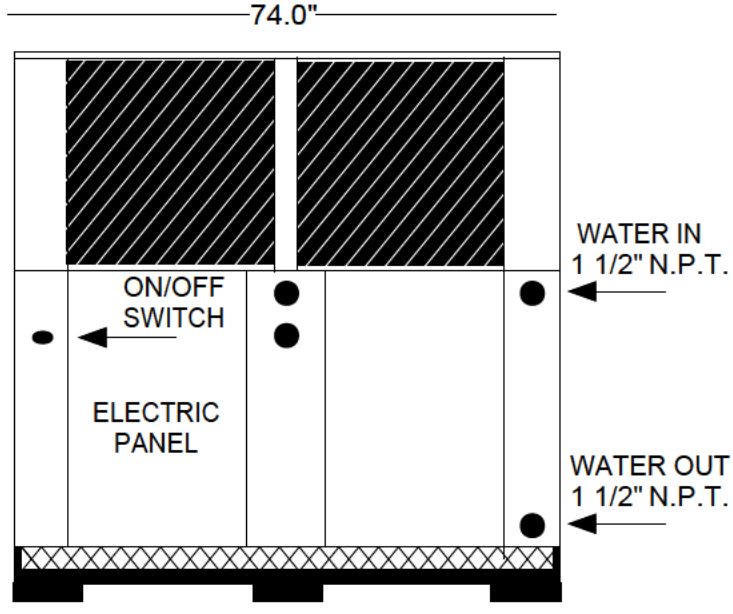

SPECIFICATIONS:

- 192,000 BTU/HR heat removal - 95F degree ambient, 45F degree water out.
- Electrical: 460 / 60HZ / 3 PH 24 volt electrical panel.
- Run Load: 43.95 Amps.
- Minimum Circuit Ampacity: 46; Maximum Circuit Ampacity: 83.
- ETL/CSA Laboratory Approved: ETL # 63122 & CAN/CSA NO. 236
- (2) 40 gallon, 16 gage, 304 stainless steel closed evaporator tank with coil inside.
- 1.5 HP water pump: 30 - 40 GPM, 35 - 45 PSI.
- Low ambient start-up package (standard).
- R422D Refrigerant.
- Analog water temperature and pressure gauges.
- Air-cooled condenser.
- Cabinet: 18 and 20 gage Phos coat galvanized steel finished with polyester powder coat.
- Base frame: 1/8 - inch angle & channel iron.
- Multi-compressor design: (4) 4 ton Copeland Hermetic (5 - year warranty).
- Independent multi-compressor operation for staged loads.
- Approximate crated weight: 2400 LBS.
- Physical dimensions: 74" wide, 74" long, and 72" tall.

NOT TO SCALE

COOLING TOWERS

AT | UT | USS

Advanced Technology (AT) Series

The Industry's Smartest Induced Draft, Counterflow Cooling Towers



ENGINEERING DATA

evapco® for LIFE

MOTOR AND DRIVE 5 Year WARRANTY

CTI CERTIFIED

*Mark owned by the Cooling Technology Institute

Advanced Technology Series
AT | UT | USS
Engineering Data & Dimensions

Nomenclature

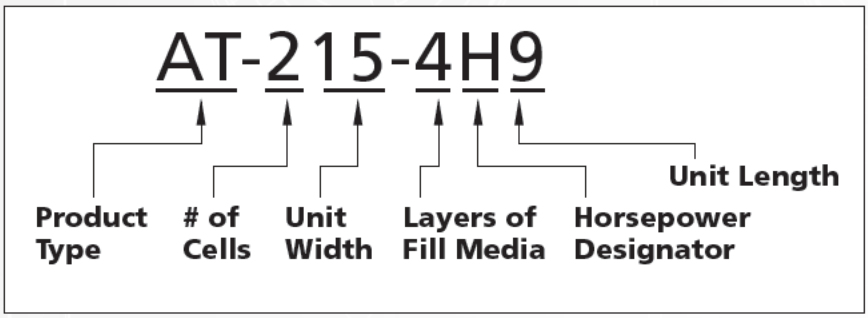

Product Type
AT – Indicates an Advanced Technology (AT) tower
UT – An AT tower with a super low sound fan
USS - An AT tower with stainless steel construction, 304, 316 or a combination. A USS tower may also include a Super Low Sound Fan.

# of Cells
Determined by the number of inlet connections, can be 1, 2, 3, or 4

Unit Width
The total width of the unit in feet, all cells included. The value is rounded up to the next whole number.

Layers of Fill Media
Determined by the number of 1 foot tall fill layers. Can be 2, 3, 4 or 5.

Horsepower Designator
Determined by the horsepower per fan motor. Available from E = 2 Hp to R = 100 Hp.

Unit Length
The total length of the unit in feet, all cells included. The value is rounded up to the next whole number.

Table of Contents

Nomenclature **1**

Engineering & Dimension Data **3-68**

AT/USS 14-2E4 to 14-3G6 3

AT/USS 14-2E9 to 14-3G12 4

AT/UT/USS 17-2G9 to 17-4K9 5

AT/UT/USS 214-2G9 to 214-4K9 6

AT/UT/USS 17-2H12 to 17-4L12 7

AT/UT/USS 27-2H24 to 27-4L24 8

AT/UT/USS 214-2H12 to 214-4L12 9

AT/UT/USS 17-2G18 to 17-4K18 10

AT/UT/USS 27-2G36 to 27-4K36 11

AT/UT/USS 214-2G18 to 214-4K18 12

AT/UT/USS 19-2F6 to 19-4J6 13

AT/UT/USS 26-2F17 to 26-4J17 14

AT/UT/USS 212-2F9 to 212-4J9 15

AT/UT/USS 19-2F8 to 19-4J8 16

AT/UT/USS 28-2F17 to 28-4J17 17

AT/UT/USS 215-2F9 to 215-4J9 18

AT/UT/USS 19-2G9 to 19-4K9 19

AT/UT/USS 29-2G18 to 29-4K18 20

AT/UT/USS 217-2G9 to 217-4K9 21

AT/UT/USS 19-2G11 to 19-4L11 22

AT/UT/USS 29-2G21 to 29-4L21 23

AT/UT/USS 217-2G11 to 217-4L11 24

AT/UT/USS 19-2H12 to 19-4M12 25

AT/UT/USS 217-2H12 to 217-4M12 26

AT/UT/USS 29-2H24 to 29-4M24 27

AT/UT/USS 39-2H36 to 39-4M36 28

AT/UT/USS 19-2H14 to 19-4M14 29

AT/UT/USS 217-2H14 to 217-4M14 30

AT/UT/USS 29-2H28 to 29-4M28 31

AT/UT/USS 39-2H42 to 39-4M42 32

AT/UT/USS 110-2I12 to 110-4N12 33

AT/UT/USS 220-2I12 to 220-4N12 34

AT/UT/USS 210-2I24 to 210-4N24 35

AT/UT/USS 310-2I36 to 310-4N36 36

AT/UT/USS 110-2I18 to 110-4N18 37

AT/UT/USS 220-2I18 to 220-4N18 38

AT/UT/USS 210-2I36 to 210-4N36 39

AT/UT/USS 112-2I12 to 112-4N12 40

AT/UT/USS 212-2I24 to 212-4N24 41

AT/UT/USS 312-2I36 to 312-4N36 42

AT/UT/USS 424-2I24 to 424-4N24 43

AT/UT/USS 112-2I14 to 112-4N14 44

AT/UT/USS 212-2I28 to 212-4N28 45

AT/UT/USS 312-2I42 to 312-4N42 46

AT/UT/USS 424-2I28 to 424-4N28 47

AT/UT/USS 112-2J18 to 112-4P18 48

AT/UT/USS 224-2J18 to 224-4P18 49

AT/UT/USS 212-2J36 to 212-4P36 50

AT/UT/USS 312-2J54 to 312-4P54 51

AT/UT/USS 424-2J36 to 424-4P36 52

AT/UT/USS 112-2K20 to 112-4P20 53

AT/UT/USS 224-2K20 to 224-4P20 54

AT/UT/USS 212-2K40 to 212-4P40 55

AT/UT/USS 312-2K60 to 312-4P60 56

AT/UT/USS 424-2K40 to 424-4P40 57

AT/UT/USS 114-2K24 to 114-4R24 58

AT/UT/USS 228-2K24 to 228-4R24 59

AT/UT/USS 214-2K48 to 214-4R48 60

AT/UT/USS 314-2K72 to 314-4Q72 61

AT/UT/USS 428-2K48 to 428-4R48 62

AT/UT/USS 114-5K26 to 114-5O26 63

AT/UT/USS 228-5K26 to 228-5O26 64

AT/UT/USS 214-5K52 to 214-5O52 65

AT/UT/USS 314-5K78 to 314-5O78 66

AT/UT/USS 428-5K52 to 428-5O52 67

AT/UT/USS 456-5K26 to 456-5O26 68

Remote Sump Applications **69**

Electric Basin Heaters **70**

Low Sound Solutions **71**

Structural Steel Support **72**

AT/UT/USS 14-2E4 to 314-5O78 72

AT/UT/USS 212-2G9 to 428-5O52 73

AT/UT/USS 342-5K26 to 342-5O26 74

AT/UT/USS 456-5K26 to 456-5O26 74

Applications **75**

Sample Mechanical Specification **76-77**

Models: AT/USS 14-2E4 to 14-3G6

One-Cell Cooling Towers

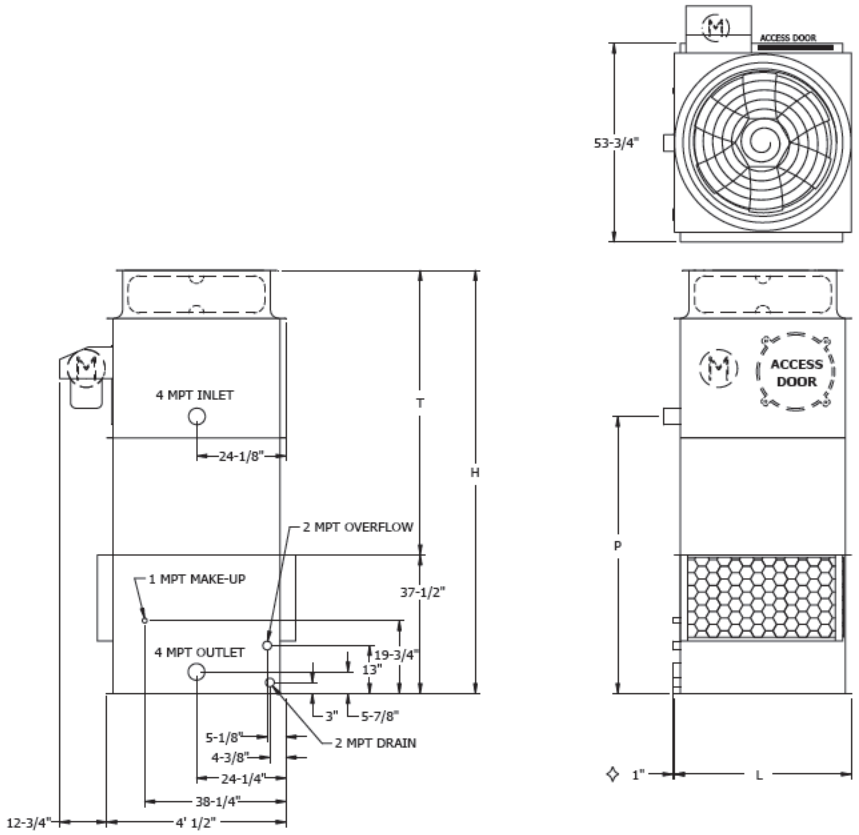

Model No.	Nominal Tonnage	WEIGHTS (LBS)			Fan Motor (HP)	Air Flow (CFM)	DIMENSIONS			
		Shipping	Operating	Heaviest Section✦			H†	T†	P	L
AT 14-2E4	33	1,080	1,710	730	2	9,600	9' 6-1/2 "	6' 5"	6' 3"	3' 11-7/8"
AT 14-2F4	39	1,130	1,760	780	3	10,900	9' 6-1/2 "	6' 5"	6' 3"	3' 11-7/8"
AT 14-3E4	37	1,160	1,790	810	2	9,500	10' 6-1/2 "	7' 5"	7' 3"	3' 11-7/8"
AT 14-3F4	43	1,210	1,840	860	3	10,700	10' 6-1/2 "	7'-5"	7' 3"	3' 11-7/8"
AT 14-2F6	57	1,390	2,410	950	3	15,300	9' 6-1/2 "	6' 5"	6' 3"	5' 11-7/8"
AT 14-2G6	67	1,410	2,430	970	5	18,000	9' 6-1/2 "	6' 5"	6' 3"	5' 11-7/8"
AT 14-3F6	64	1,490	2,510	1,050	3	15,100	10' 6-1/2 "	7' 5"	7' 3"	5' 11-7/8"
AT 14-3G6	74	1,510	2,530	1,070	5	17,700	10' 6-1/2 "	7' 5"	7' 3"	5' 11-7/8"

NOTE: (1) An adequately sized bleed line must be installed in the cooling tower system to prevent build-up of impurities in the recirculated water.
(2) Do not use catalog drawings for certified prints. Dimensions and weights are subject to change.
(3) Adequate spacing must be allowed for access to the cooling tower. Refer to EVAPCO's Equipment Layout Manual.
(4) Nominal Tonnage is based on 3 gpm per ton at 95 degree entering water temperature, 85 degree leaving water temperature, and 78 degree wet-bulb temperature.

✧ Outlet connection extends beyond bottom flange.
† Height includes fan guard which ships factory mounted.
✦ Heaviest section is upper section.

Models: AT/USS 14-2E9 to 14-3G12

One-Cell Cooling Towers

*14-2E9 to 14-3F9
(1) 4" Inlet
(1) 4" Outlet

*14-2F12 to 14-3G12
(1) 6" Inlet
(1) 6" Outlet

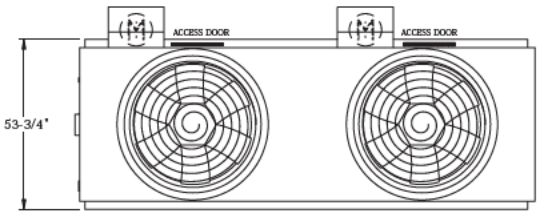

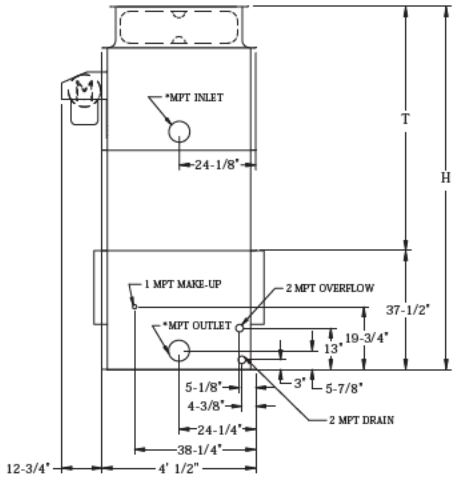

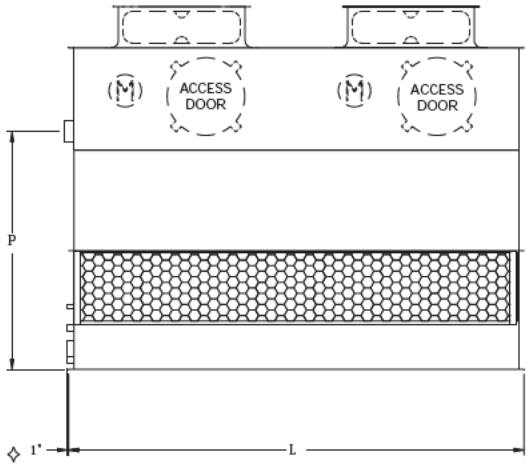

Model No.	Nominal Tonnage	WEIGHTS (LBS)			Fan Motor (HP)	Air Flow (CFM)	Dimensions			
		Shipping	Operating	Heaviest Section✦			H†	T†	P	L
AT 14-2E9	76	2,000	3,550	1,380	(2) 2	21,200	9' 6-1/2"	6' 5"	6' 3"	8' 11-1/2"
AT 14-2F9	90	2,100	3,650	1,480	(2) 3	24,100	9' 6-1/2"	6' 5"	6' 3"	8' 11-1/2"
AT 14-3E9	86	2,160	3,710	1,540	(2) 2	20,800	10' 6-1/2"	7' 5"	7' 3"	8' 11-1/2"
AT 14-3F9	100	2,260	3,810	1,640	(2) 3	23,600	10' 6-1/2"	7' 5"	7' 3"	8' 11-1/2"
AT 14-2F12	115	2,530	4,650	1,770	(2) 3	31,000	9' 6-1/2"	6' 5"	6' 3"	11' 11-3/4"
AT 14-2G12	137	2,570	4,690	1,810	(2) 5	36,400	9' 6-1/2"	6' 5"	6' 3"	11' 11-3/4"
AT 14-3F12	129	2,730	4,850	1,970	(2) 3	30,400	10' 6-1/2"	7' 5"	7' 3"	11' 11-3/4"
AT 14-3G12	150	2,770	4,890	2,010	(2) 5	35,700	10' 6-1/2"	7' 5"	7' 3"	11' 11-3/4"

NOTE: (1) An adequately sized bleed line must be installed in the cooling tower system to prevent build-up of impurities in the recirculated water.
(2) Do not use catalog drawings for certified prints. Dimensions and weights are subject to change.
(3) Adequate spacing must be allowed for access to the cooling tower. Refer to EVAPCO's Equipment Layout Manual.
(4) Nominal Tonnage is based on 3 gpm per ton at 95 degree entering water temperature, 85 degree leaving water temperature, and 78 degree wet-bulb temperature.

✧ Outlet connection extends beyond bottom flange.
† Height includes fan guard which ships factory mounted.
✦ Heaviest section is upper section.

Models: AT/UT/USS 17-2G9 to 17-4K9

One-Cell Cooling Towers

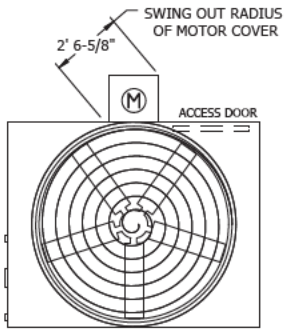

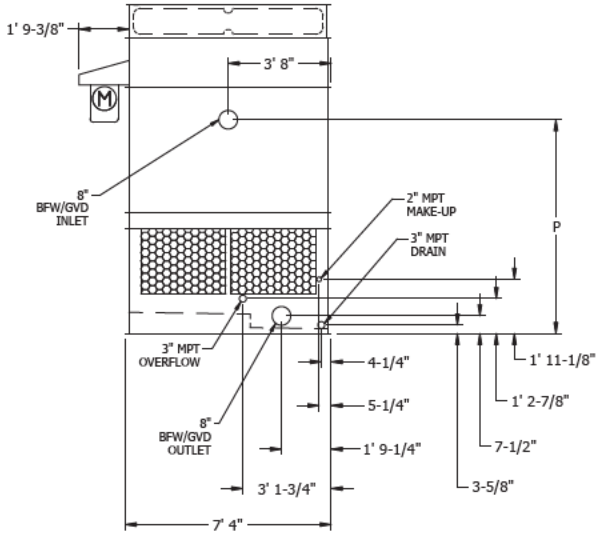

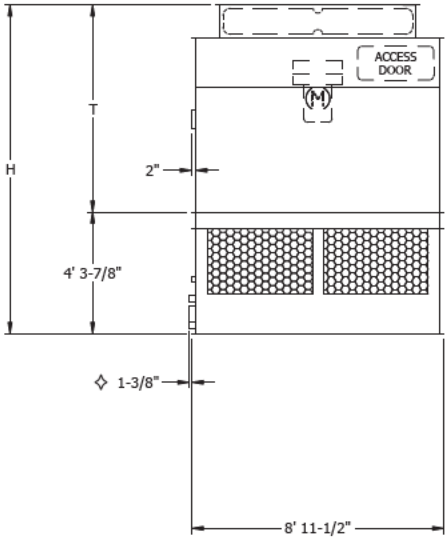

Model No.	Nominal Tonnage	WEIGHTS (LBS)			Fan Motor (HP)	Air Flow (CFM)	DIMENSIONS		
		Shipping	Operating	Heaviest Section✦			H†	T†	P
AT 17-2G9	113	3,920	6,430	2,560	5	32,100	11' 8-3/8 "	7' 4-1/2 "	7' 7-3/8 "
AT 17-2H9	135	3,960	6,470	2,600	7.5	36,500	11' 8-3/8 "	7' 4-1/2 "	7' 7-3/8 "
AT 17-2I9	149	3,990	6,500	2,630	10	40,100	11' 8-3/8 "	7' 4-1/2 "	7' 7-3/8 "
AT 17-2J9	171	4,060	6,570	2,700	15	45,600	11' 8-3/8 "	7' 4-1/2 "	7' 7-3/8 "
AT 17-3G9	129	4,180	6,690	2,820	5	31,600	12' 8-3/8 "	8' 4-1/2 "	8' 7-3/8 "
AT 17-3H9	152	4,220	6,730	2,860	7.5	36,000	12' 8-3/8 "	8' 4-1/2 "	8' 7-3/8 "
AT 17-3I9	168	4,250	6,760	2,890	10	39,400	12' 8-3/8 "	8' 4-1/2 "	8' 7-3/8 "
AT 17-3J9	193	4,320	6,830	2,960	15	44,700	12' 8-3/8 "	8' 4-1/2 "	8' 7-3/8 "
AT 17-3K9	213	4,370	6,880	3,010	20	48,900	12' 8-3/8 "	8' 4-1/2 "	8' 7-3/8 "
AT 17-4G9	143	4,440	6,950	3,080	5	31,100	13' 8-3/8 "	9' 4-1/2 "	9' 7-3/8 "
AT 17-4H9	164	4,480	6,990	3,120	7.5	35,300	13' 8-3/8 "	9' 4-1/2 "	9' 7-3/8 "
AT 17-4I9	179	4,510	7,020	3,150	10	38,700	13' 8-3/8 "	9' 4-1/2 "	9' 7-3/8 "
AT 17-4J9	202	4,580	7,090	3,220	15	44,000	13' 8-3/8 "	9' 4-1/2 "	9' 7-3/8 "
AT 17-4K9	220	4,630	7,140	3,270	20	48,100	13' 8-3/8 "	9' 4-1/2 "	9' 7-3/8 "
SLSF Addition		130	130	130			1' 6"	1' 6"	

NOTE: (1) An adequately sized bleed line must be installed in the cooling tower system to prevent build-up of impurities in the recirculated water.
(2) Do not use catalog drawings for certified prints. Dimensions and weights are subject to change.
(3) Adequate spacing must be allowed for access to the cooling tower. Refer to EVAPCO's Equipment Layout Manual.
(4) Nominal Tonnage is based on 3 gpm per ton at 95 degree entering water temperature, 85 degree leaving water temperature, and 78 degree wet-bulb temperature.

✧ Outlet connection extends beyond bottom flange.
† Height includes fan guard which ships factory mounted.
✦ Heaviest section is upper section.

Models: AT/UT/USS 214-2G9 to 214-4K9

Two-Cell Cooling Towers

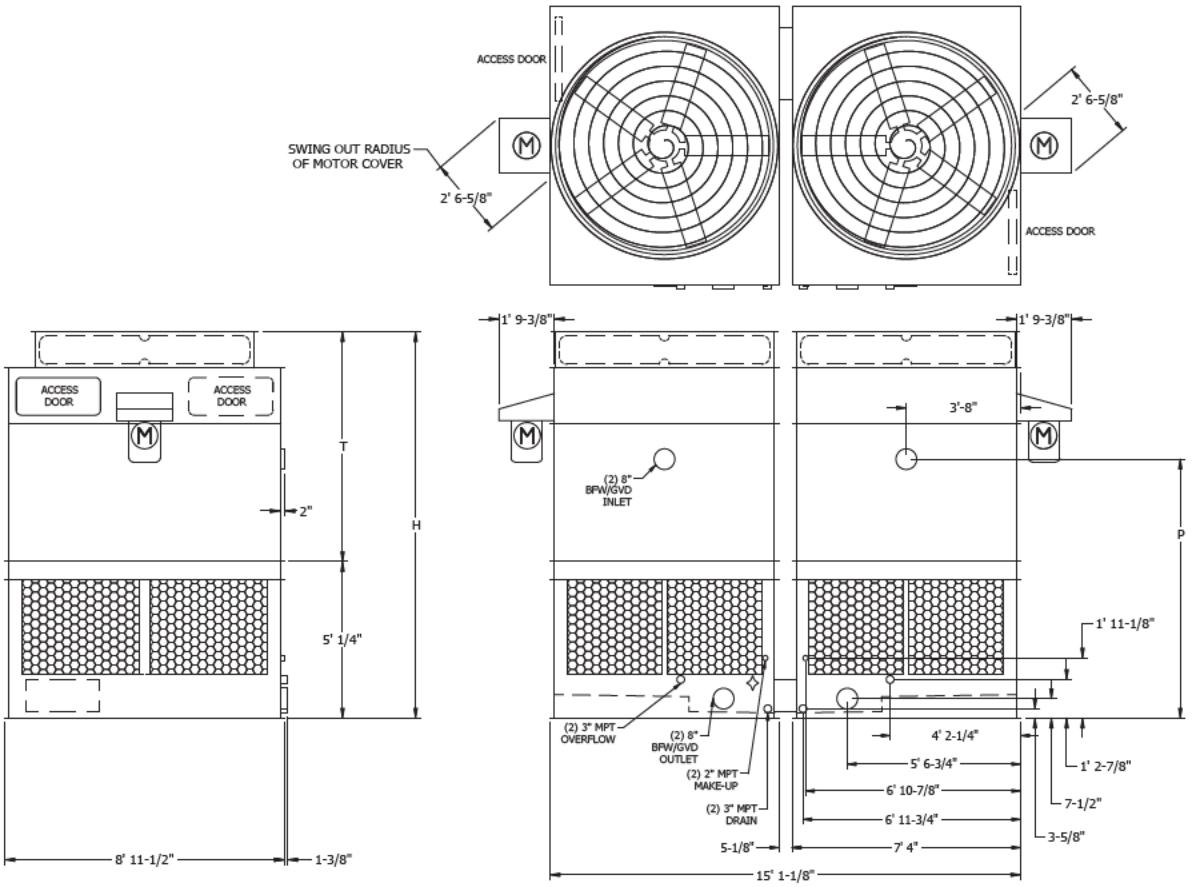

Model No.	Nominal Tonnage	WEIGHTS (LBS)			Fan Motor (HP)	Air Flow (CFM)	DIMENSIONS		
		Shipping	Operating	Heaviest Section✦			H†	T†	P
AT 214-2G9	225	7,980	11,700	2,560	(2) 5	63,700	12' 4-3/4 "	7' 4-1/2 "	8' 3-3/4 "
AT 214-2H9	269	8,060	11,780	2,600	(2) 7.5	72,400	12' 4-3/4 "	7' 4-1/2 "	8' 3-3/4 "
AT 214-2I9	298	8,120	11,840	2,630	(2) 10	79,400	12' 4-3/4 "	7' 4-1/2 "	8' 3-3/4 "
AT 214-2J9	342	8,260	11,980	2,700	(2) 15	90,300	12' 4-3/4 "	7' 4-1/2 "	8' 3-3/4 "
AT 214-3G9	259	8,500	12,220	2,820	(2) 5	62,700	13' 4-3/4 "	8' 4-1/2 "	9' 3-3/4 "
AT 214-3H9	303	8,580	12,300	2,860	(2) 7.5	71,300	13' 4-3/4 "	8' 4-1/2 "	9' 3-3/4 "
AT 214-3I9	336	8,640	12,360	2,890	(2) 10	78,000	13' 4-3/4 "	8' 4-1/2 "	9' 3-3/4 "
AT 214-3J9	385	8,780	12,500	2,960	(2) 15	88,600	13' 4-3/4 "	8' 4-1/2 "	9' 3-3/4 "
AT 214-3K9	426	8,880	12,600	3,010	(2) 20	96,900	13' 4-3/4 "	8' 4-1/2 "	9' 3-3/4 "
AT 214-4G9	287	9,020	12,740	3,080	(2) 5	61,600	14' 4-3/4 "	9' 4-1/2 "	10' 3-3/4 "
AT 214-4H9	328	9,100	12,820	3,120	(2) 7.5	70,000	14' 4-3/4 "	9' 4-1/2 "	10' 3-3/4 "
AT 214-4I9	358	9,160	12,880	3,150	(2) 10	76,700	14' 4-3/4 "	9' 4-1/2 "	10' 3-3/4 "
AT 214-4J9	404	9,300	13,020	3,220	(2) 15	87,100	14' 4-3/4 "	9' 4-1/2 "	10' 3-3/4 "
AT 214-4K9	441	9,400	13,120	3,270	(2) 20	95,300	14' 4-3/4 "	9' 4-1/2 "	10' 3-3/4 "
SLSF Addition		260	260	130			1' 6"	1' 6"	

NOTE: (1) An adequately sized bleed line must be installed in the cooling tower system to prevent build-up of impurities in the recirculated water.
(2) Do not use catalog drawings for certified prints. Dimensions and weights are subject to change.
(3) Adequate spacing must be allowed for access to the cooling tower. Refer to EVAPCO's Equipment Layout Manual.
(4) Nominal Tonnage is based on 3 gpm per ton at 95 degree entering water temperature, 85 degree leaving water temperature, and 78 degree wet-bulb temperature.

✧ Outlet connection extends beyond bottom flange.
† Height includes fan guard which ships factory mounted.
✦ Heaviest section is upper section.

Models: AT/UT/USS 17-2H12 to 17-4L12

One-Cell Cooling Towers

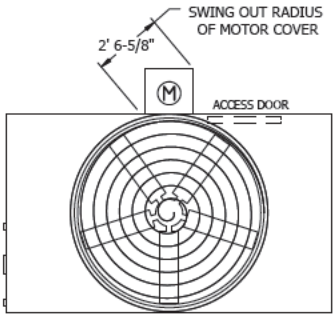

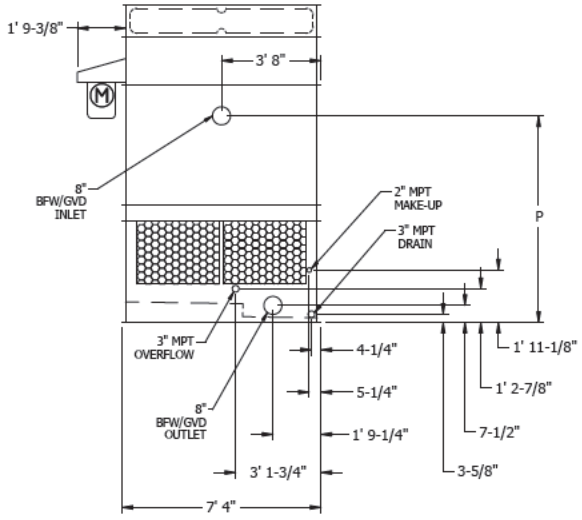

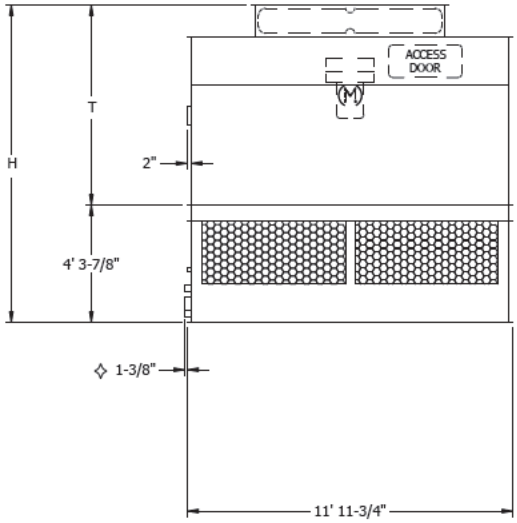

Model No.	Nominal Tonnage	WEIGHTS (LBS)			Fan Motor (HP)	Air Flow (CFM)	DIMENSIONS		
		Shipping	Operating	Heaviest Section✦			H†	T†	P
AT 17-2H12	164	4,730	8,090	3,080	7.5	46,000	11' 8-3/8 "	7' 4-1/2 "	7' 7-3/8 "
AT 17-2I12	180	4,760	8,120	3,110	10	50,500	11' 8-3/8 "	7' 4-1/2 "	7' 7-3/8 "
AT 17-2J12	208	4,830	8,190	3,180	15	57,500	11' 8-3/8 "	7' 4-1/2 "	7' 7-3/8 "
AT 17-2K12	229	4,880	8,240	3,230	20	63,000	11' 8-3/8 "	7' 4-1/2 "	7' 7-3/8 "
AT 17-3H12	184	5,060	8,420	3,410	7.5	45,400	12' 8-3/8 "	8' 4-1/2 "	8' 7-3/8 "
AT 17-3I12	203	5,090	8,450	3,440	10	49,700	12' 8-3/8 "	8' 4-1/2 "	8' 7-3/8 "
AT 17-3J12	234	5,160	8,520	3,510	15	56,400	12' 8-3/8 "	8' 4-1/2 "	8' 7-3/8 "
AT 17-3K12	258	5,210	8,570	3,560	20	61,700	12' 8-3/8 "	8' 4-1/2 "	8' 7-3/8 "
AT 17-3L12	279	5,240	8,600	3,590	25	66,200	12' 8-3/8 "	8' 4-1/2 "	8' 7-3/8 "
AT 17-4H12	201	5,390	8,750	3,740	7.5	44,600	13' 8-3/8 "	9' 4-1/2 "	9' 7-3/8 "
AT 17-4I12	220	5,420	8,780	3,770	10	48,800	13' 8-3/8 "	9' 4-1/2 "	9' 7-3/8 "
AT 17-4J12	249	5,490	8,850	3,840	15	55,500	13' 8-3/8 "	9' 4-1/2 "	9' 7-3/8 "
AT 17-4K12	271	5,540	8,900	3,890	20	60,700	13' 8-3/8 "	9' 4-1/2 "	9' 7-3/8 "
AT 17-4L12	290	5,570	8,930	3,920	25	65,100	13' 8-3/8 "	9' 4-1/2 "	9' 7-3/8 "
SLSF Addition		130	130	130			1' 6"	1' 6"	

NOTE: (1) An adequately sized bleed line must be installed in the cooling tower system to prevent build-up of impurities in the recirculated water.
(2) Do not use catalog drawings for certified prints. Dimensions and weights are subject to change.
(3) Adequate spacing must be allowed for access to the cooling tower. Refer to EVAPCO's Equipment Layout Manual.
(4) Nominal Tonnage is based on 3 gpm per ton at 95 degree entering water temperature, 85 degree leaving water temperature, and 78 degree wet-bulb temperature.

✧ Outlet connection extends beyond bottom flange.
† Height includes fan guard which ships factory mounted.
✦ Heaviest section is upper section.

Models: AT/UT/USS 27-2H24 to 27-4L24

One-Cell Cooling Towers

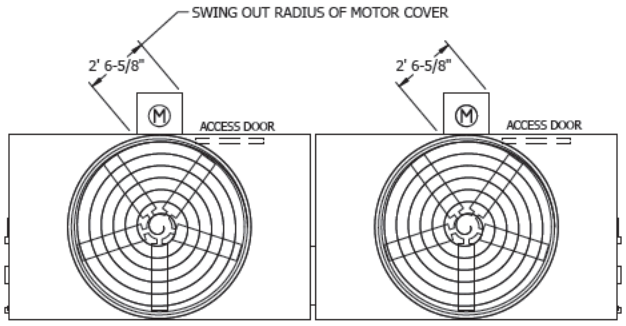

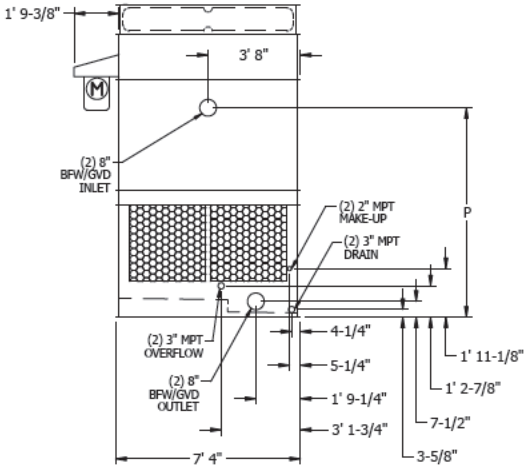

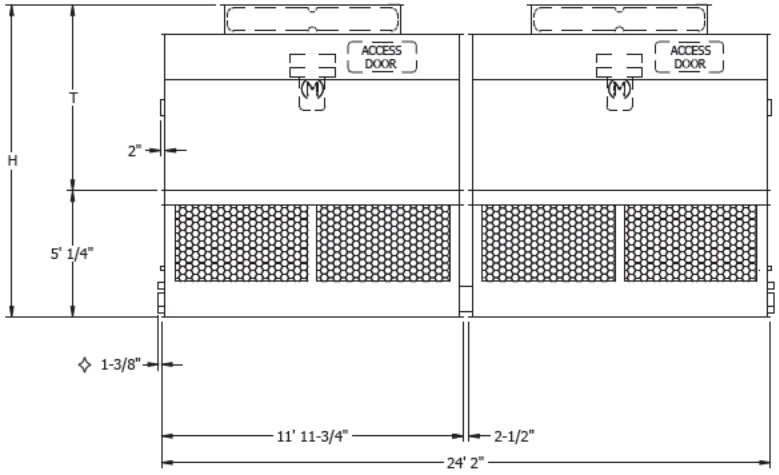

Model No.	Nominal Tonnage	WEIGHTS (LBS)			Fan Motor (HP)	Air Flow (CFM)	DIMENSIONS		
		Shipping	Operating	Heaviest Section✦			H†	T†	P
AT 27-2H24	323	9,740	14,710	3,080	(2) 7.5	91,700	12' 4-3/4 "	7' 4-1/2 "	8' 3-3/4 "
AT 27-2I24	356	9,800	14,770	3,110	(2) 10	100,600	12' 4-3/4 "	7' 4-1/2 "	8' 3-3/4 "
AT 27-2J24	410	9,940	14,910	3,180	(2) 15	114,400	12' 4-3/4 "	7' 4-1/2 "	8' 3-3/4 "
AT 27-2K24	453	10,040	15,010	3,230	(2) 20	125,400	12' 4-3/4 "	7' 4-1/2 "	8' 3-3/4 "
AT 27-3H24	363	10,400	15,370	3,410	(2) 7.5	90,400	13' 4-3/4 "	8' 4-1/2 "	9' 3-3/4 "
AT 27-3I24	402	10,460	15,430	3,440	(2) 10	99,000	13' 4-3/4 "	8' 4-1/2 "	9' 3-3/4 "
AT 27-3J24	463	10,600	15,570	3,510	(2) 15	112,400	13' 4-3/4 "	8' 4-1/2 "	9' 3-3/4 "
AT 27-3K24	511	10,700	15,670	3,560	(2) 20	123,000	13' 4-3/4 "	8' 4-1/2 "	9' 3-3/4 "
AT 27-3L24	553	10,760	15,730	3,590	(2) 25	131,900	13' 4-3/4 "	8' 4-1/2 "	9' 3-3/4 "
AT 27-4H24	398	11,060	16,030	3,740	(2) 7.5	88,700	14' 4-3/4 "	9' 4-1/2 "	10' 3-3/4 "
AT 27-4I24	436	11,120	16,090	3,770	(2) 10	97,200	14' 4-3/4 "	9' 4-1/2 "	10' 3-3/4 "
AT 27-4J24	492	11,260	16,230	3,840	(2) 15	110,500	14' 4-3/4 "	9' 4-1/2 "	10' 3-3/4 "
AT 27-4K24	537	11,360	16,330	3,890	(2) 20	121,000	14' 4-3/4 "	9' 4-1/2 "	10' 3-3/4 "
AT 27-4L24	574	11,420	16,390	3,920	(2) 25	129,700	14' 4-3/4 "	9' 4-1/2 "	10' 3-3/4 "
SLSF Addition		260	260	130			1' 6"	1' 6"	

NOTE:
(1) An adequately sized bleed line must be installed in the cooling tower system to prevent build-up of impurities in the recirculated water.
(2) Do not use catalog drawings for certified prints. Dimensions and weights are subject to change.
(3) Adequate spacing must be allowed for access to the cooling tower. Refer to EVAPCO's Equipment Layout Manual.
(4) Nominal Tonnage is based on 3 gpm per ton at 95 degree entering water temperature, 85 degree leaving water temperature, and 78 degree wet-bulb temperature.

✧ Outlet connection extends beyond bottom flange.
† Height includes fan guard which ships factory mounted.
✦ Heaviest section is upper section.

Models: AT/UT/USS 214-2H12 to 214-4L12

Two-Cell Cooling Towers

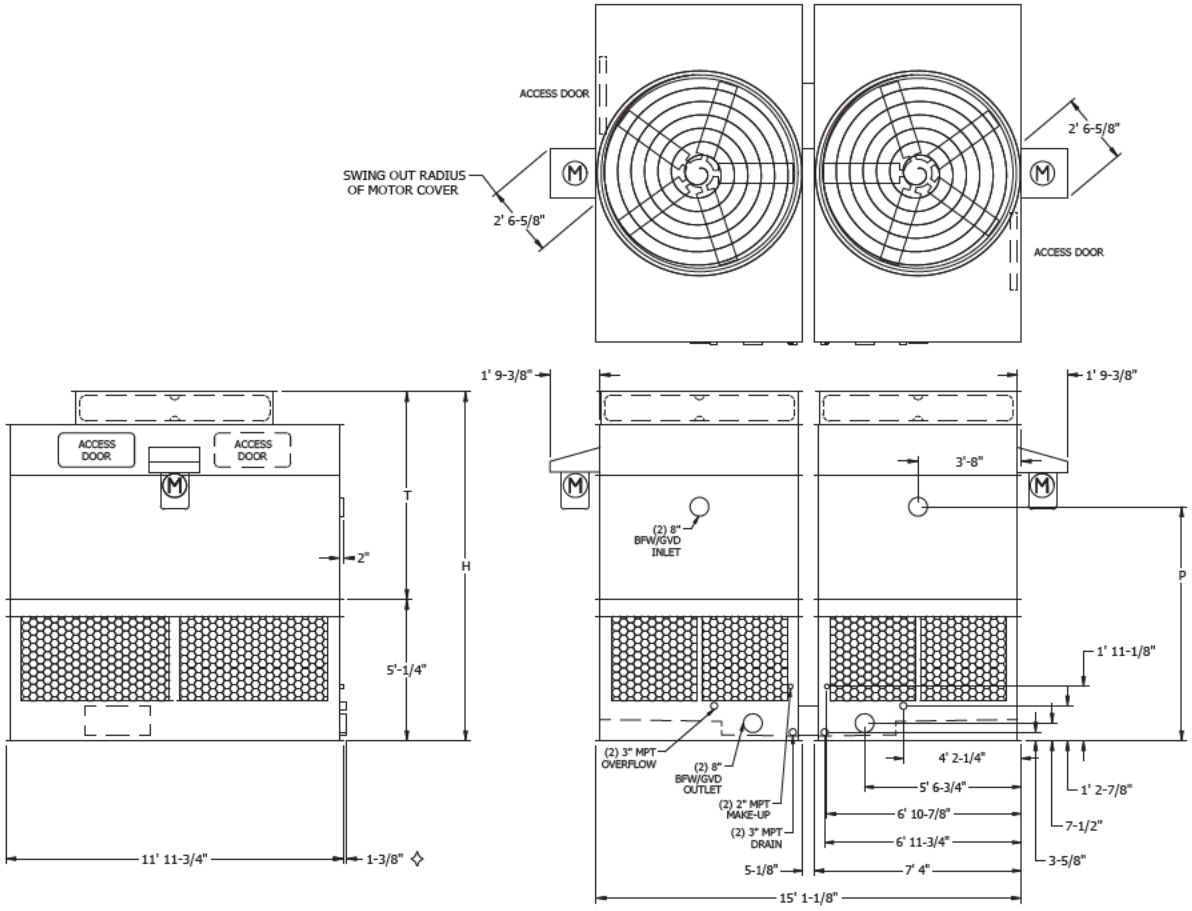

Model No.	Nominal Tonnage	WEIGHTS (LBS)			Fan Motor (HP)	Air Flow (CFM)	DIMENSIONS		
		Shipping	Operating	Heaviest Section✦			H†	T†	P
AT 214-2H12	317	9,660	14,630	3,080	(2) 7.5	90,300	12' 4-3/4 "	7' 4-1/2 "	8' 3-3/4 "
AT 214-2I12	350	9,720	14,690	3,110	(2) 10	99,100	12' 4-3/4 "	7' 4-1/2 "	8' 3-3/4 "
AT 214-2J12	404	9,860	14,830	3,180	(2) 15	112,800	12' 4-3/4 "	7' 4-1/2 "	8' 3-3/4 "
AT 214-2K12	446	9,960	14,930	3,230	(2) 20	123,600	12' 4-3/4 "	7' 4-1/2 "	8' 3-3/4 "
AT 214-3H12	358	10,320	15,290	3,410	(2) 7.5	89,000	13' 4-3/4 "	8' 4-1/2 "	9' 3-3/4 "
AT 214-3I12	396	10,380	15,350	3,440	(2) 10	97,500	13' 4-3/4 "	8' 4-1/2 "	9' 3-3/4 "
AT 214-3J12	456	10,520	15,490	3,510	(2) 15	110,800	13' 4-3/4 "	8' 4-1/2 "	9' 3-3/4 "
AT 214-3K12	504	10,620	15,590	3,560	(2) 20	121,200	13' 4-3/4 "	8' 4-1/2 "	9' 3-3/4 "
AT 214-3L12	545	10,680	15,650	3,590	(2) 25	129,900	13' 4-3/4 "	8' 4-1/2 "	9' 3-3/4 "
AT 214-4H12	393	10,980	15,950	3,740	(2) 7.5	87,400	14' 4-3/4 "	9' 4-1/2 "	10' 3-3/4 "
AT 214-4I12	430	11,040	16,010	3,770	(2) 10	95,800	14' 4-3/4 "	9' 4-1/2 "	10' 3-3/4 "
AT 214-4J12	486	11,180	16,150	3,840	(2) 15	108,900	14' 4-3/4 "	9' 4-1/2 "	10' 3-3/4 "
AT 214-4K12	530	11,280	16,250	3,890	(2) 20	119,200	14' 4-3/4 "	9' 4-1/2 "	10' 3-3/4 "
AT 214-4L12	567	11,340	16,310	3,920	(2) 25	127,900	14' 4-3/4 "	9' 4-1/2 "	10' 3-3/4 "
SLSF Addition		260	260	130			1' 6"	1' 6"	

NOTE: (1) An adequately sized bleed line must be installed in the cooling tower system to prevent build-up of impurities in the recirculated water.
(2) Do not use catalog drawings for certified prints. Dimensions and weights are subject to change.
(3) Adequate spacing must be allowed for access to the cooling tower. Refer to EVAPCO's Equipment Layout Manual.
(4) Nominal Tonnage is based on 3 gpm per ton at 95 degree entering water temperature, 85 degree leaving water temperature, and 78 degree wet-bulb temperature.

✧ Outlet connection extends beyond bottom flange.
† Height includes fan guard which ships factory mounted.
✦ Heaviest section is upper section.

Models: AT/UT/USS 17-2G18 to 17-4K18

One-Cell Cooling Towers

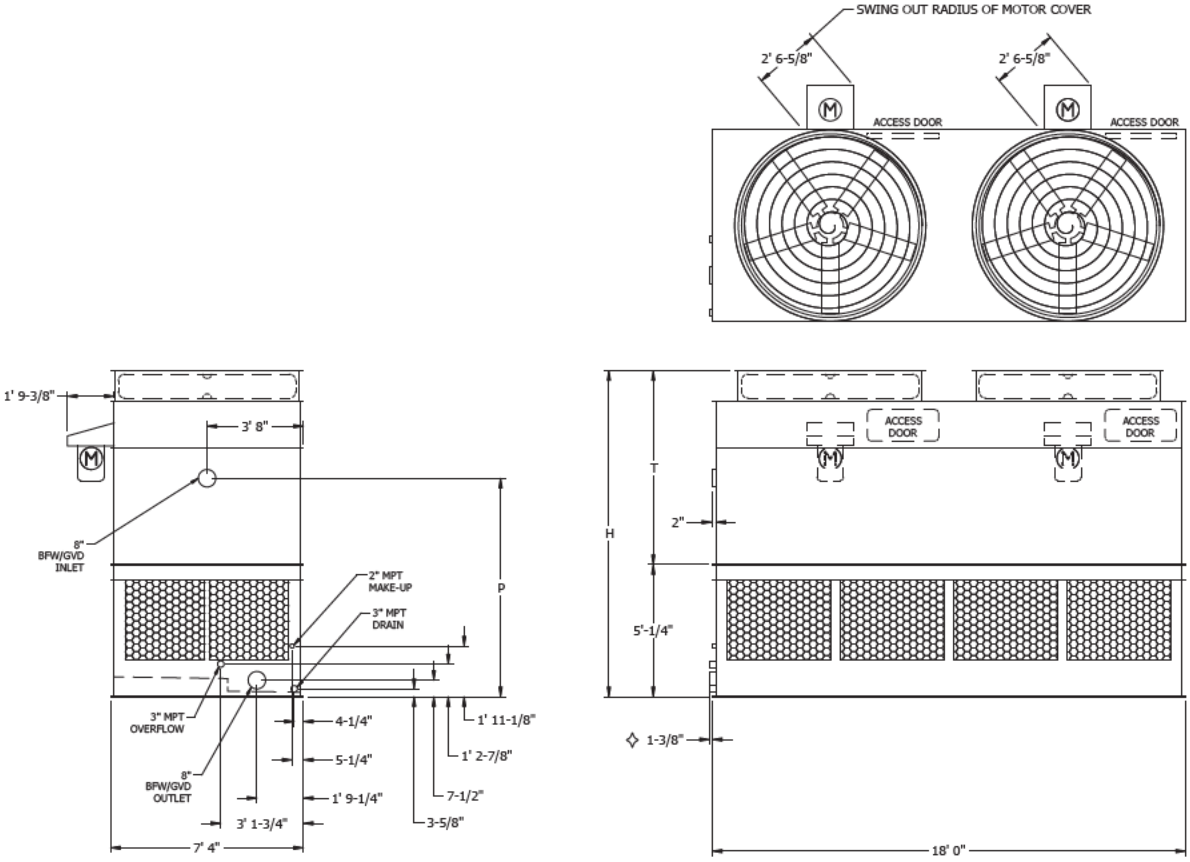

Model No.	Nominal Tonnage	WEIGHTS (LBS)			Fan Motor (HP)	Air Flow (CFM)	DIMENSIONS		
		Shipping	Operating	Heaviest Section✦			H†	T†	P
AT 17-2G18	228	7,430	12,560	4,800	5	64,900	12' 4-3/4"	7' 4-1/2"	8' 3-3/4"
AT 17-2H18	272	7,510	12,640	4,880	7.5	73,800	12' 4-3/4"	7' 4-1/2"	8' 3-3/4"
AT 17-2I18	301	7,570	12,700	4,940	10	80,900	12' 4-3/4"	7' 4-1/2"	8' 3-3/4"
AT 17-2J18	346	7,710	12,840	5,080	15	92,100	12' 4-3/4"	7' 4-1/2"	8' 3-3/4"
AT 17-3G18	261	7,910	13,040	5,280	5	63,900	13' 4-3/4"	8' 4-1/2"	9' 3-3/4"
AT 17-3H18	306	7,990	13,120	5,360	7.5	72,700	13' 4-3/4"	8' 4-1/2"	9' 3-3/4"
AT 17-3I18	339	8,050	13,180	5,420	10	79,500	13' 4-3/4"	8' 4-1/2"	9' 3-3/4"
AT 17-3J18	389	8,190	13,320	5,560	15	90,300	13' 4-3/4"	8' 4-1/2"	9' 3-3/4"
AT 17-3K18	430	8,290	13,420	5,660	20	98,800	13'-4-3/4"	8' 4-1/2"	9' 3-3/4"
AT 17-4G18	289	8,380	13,510	5,750	5	62,800	14' 4-3/4"	9' 4-1/2"	10' 3-3/4"
AT 17-4H18	332	8,460	13,590	5,830	7.5	71,400	14' 4-3/4"	9' 4-1/2"	10' 3-3/4"
AT 17-4I18	362	8,520	13,650	5,890	10	78,200	14' 4-3/4"	9' 4-1/2"	10' 3-3/4"
AT 17-4J18	408	8,660	13,790	6,030	15	88,800	14' 4-3/4"	9' 4-1/2"	10' 3-3/4"
AT 17-4K18	445	8,760	13,890	6,130	20	97,200	14' 4-3/4"	9' 4-1/2"	10' 3-3/4"
SLSF Addition		260	260	130			1' 6"	1' 6"	

NOTE: (1) An adequately sized bleed line must be installed in the cooling tower system to prevent build-up of impurities in the recirculated water.
(2) Do not use catalog drawings for certified prints. Dimensions and weights are subject to change.
(3) Adequate spacing must be allowed for access to the cooling tower. Refer to EVAPCO's Equipment Layout Manual.
(4) Nominal Tonnage is based on 3 gpm per ton at 95 degree entering water temperature, 85 degree leaving water temperature, and 78 degree wet-bulb temperature.

✧ Outlet connection extends beyond bottom flange.
† Height includes fan guard which ships factory mounted.
✦ Heaviest section is upper section.

Models: AT/UT/USS 27-2G36 to 27-4K36

Two-Cell Cooling Towers

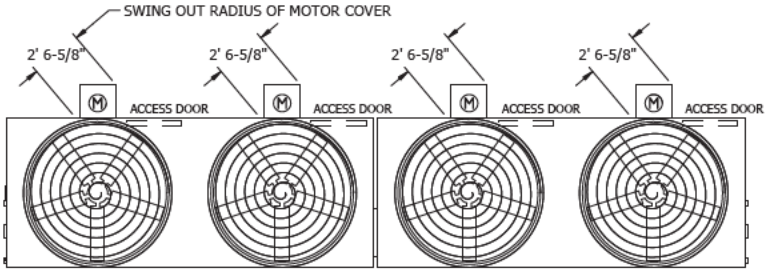

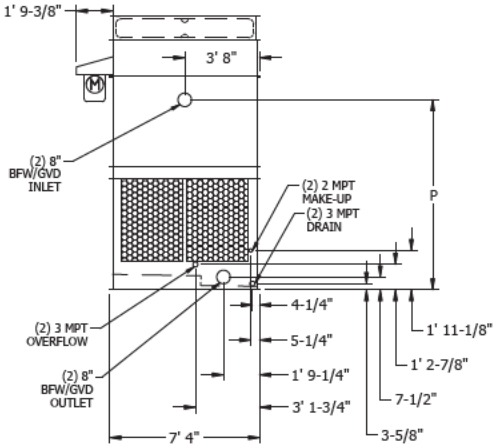

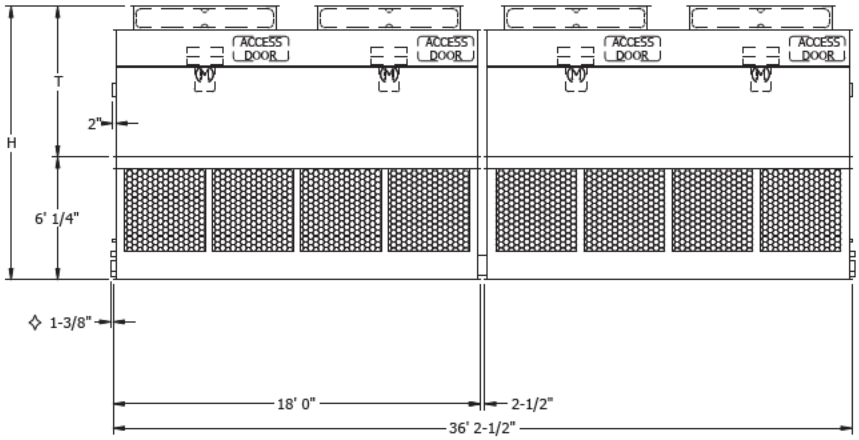

Model No.	Nominal Tonnage	WEIGHTS (LBS)			Fan Motor (HP)	Air Flow (CFM)	DIMENSIONS		
		Shipping	Operating	Heaviest Section✦			H†	T†	P
AT 27-2G36	444	15,080	22,680	4,800	(4) 5	132,800	13' 4-3/4 "	7' 4-1/2 "	9' 3-3/4 "
AT 27-2H36	531	15,240	22,840	4,880	(4) 7.5	151,000	13' 4-3/4 "	7' 4-1/2 "	9' 3-3/4 "
AT 27-2I36	588	15,360	22,960	4,940	(4) 10	165,500	13' 4-3/4 "	7' 4-1/2 "	9' 3-3/4 "
AT 27-2J36	676	15,640	23,240	5,080	(4) 15	188,300	13' 4-3/4 "	7' 4-1/2 "	9' 3-3/4 "
AT 27-3G36	511	16,040	23,640	5,280	(4) 5	130,700	14' 4-3/4 "	8' 4-1/2 "	10' 3-3/4 "
AT 27-3H36	600	16,200	23,800	5,360	(4) 7.5	148,700	14' 4-3/4 "	8' 4-1/2 "	10' 3-3/4 "
AT 27-3I36	664	16,320	23,920	5,420	(4) 10	162,700	14' 4-3/4 "	8' 4-1/2 "	10' 3-3/4 "
AT 27-3J36	763	16,600	24,200	5,560	(4) 15	184,700	14' 4-3/4 "	8' 4-1/2 "	10' 3-3/4 "
AT 27-3K36	844	16,800	24,400	5,660	(4) 20	202,100	14' 4-3/4 "	8' 4-1/2 "	10' 3-3/4 "
AT 27-4G36	568	16,980	24,580	5,750	(4) 5	128,400	15' 4-3/4 "	9' 4-1/2 "	11' 3-3/4 "
AT 27-4H36	651	17,140	24,740	5,830	(4) 7.5	146,000	15' 4-3/4 "	9' 4-1/2 "	11' 3-3/4 "
AT 27-4I36	710	17,260	24,860	5,890	(4) 10	159,900	15' 4-3/4 "	9' 4-1/2 "	11' 3-3/4 "
AT 27-4J36	802	17,540	25,140	6,030	(4) 15	181,700	15' 4-3/4 "	9' 4-1/2 "	11' 3-3/4 "
AT 27-4K36	875	17,740	25,340	6,130	(4) 20	198,800	15' 4-3/4 "	9' 4-1/2 "	11' 3-3/4 "
SLSF Addition		390	390	130			1' 6"	1' 6"	

NOTE: (1) An adequately sized bleed line must be installed in the cooling tower system to prevent build-up of impurities in the recirculated water.
(2) Do not use catalog drawings for certified prints. Dimensions and weights are subject to change.
(3) Adequate spacing must be allowed for access to the cooling tower. Refer to EVAPCO's Equipment Layout Manual.
(4) Nominal Tonnage is based on 3 gpm per ton at 95 degree entering water temperature, 85 degree leaving water temperature, and 78 degree wet-bulb temperature.

✧ Outlet connection extends beyond bottom flange.
† Height includes fan guard which ships factory mounted.
✦ Heaviest section is upper section.

Models: AT/UT/USS 214-2G18 to 214-4K18

Two-Cell Cooling Towers

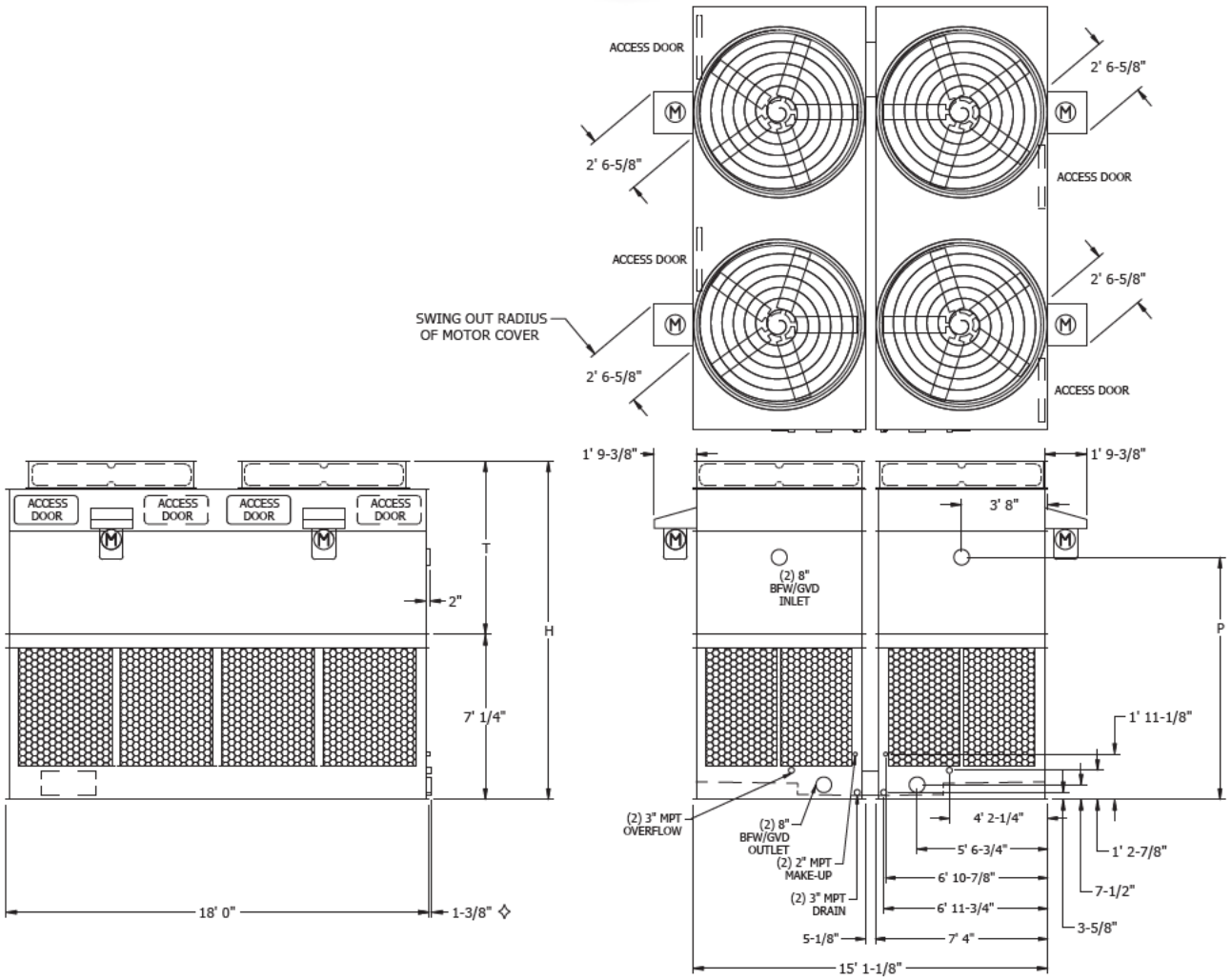

Model No.	Nominal Tonnage	WEIGHTS (LBS)			Fan Motor (HP)	Air Flow (CFM)	DIMENSIONS		
		Shipping	Operating	Heaviest Section✦			H†	T†	P
AT 214-2G18	441	15,620	23,220	4,800	(4) 5	132,300	14' 4-3/4 "	7' 4-1/2 "	10' 3-3/4 "
AT 214-2H18	528	15,780	23,380	4,880	(4) 7.5	150,500	14' 4-3/4 "	7' 4-1/2 "	10' 3-3/4 "
AT 214-2I18	585	15,900	23,500	4,940	(4) 10	164,900	14' 4-3/4 "	7' 4-1/2 "	10' 3-3/4 "
AT 214-2J18	673	16,180	23,780	5,080	(4) 15	187,600	14' 4-3/4 "	7' 4-1/2 "	10' 3-3/4 "
AT 214-3G18	508	16,580	24,180	5,280	(4) 5	130,300	15' 4-3/4 "	8' 4-1/2 "	11' 3-3/4 "
AT 214-3H18	597	16,740	24,340	5,360	(4) 7.5	148,100	15' 4-3/4 "	8' 4-1/2 "	11' 3-3/4 "
AT 214-3I18	661	16,860	24,460	5,420	(4) 10	162,100	15' 4-3/4 "	8' 4-1/2 "	11' 3-3/4 "
AT 214-3J18	760	17,140	24,740	5,560	(4) 15	184,000	15' 4-3/4 "	8' 4-1/2 "	11' 3-3/4 "
AT 214-3K18	840	17,340	24,940	5,660	(4) 20	201,400	15' 4-3/4 "	8' 4-1/2 "	11' 3-3/4 "
AT 214-4G18	565	17,520	25,120	5,750	(4) 5	127,900	16' 4-3/4 "	9' 4-1/2 "	12' 3-3/4 "
AT 214-4H18	648	17,680	25,280	5,830	(4) 7.5	145,500	16' 4-3/4 "	9' 4-1/2 "	12' 3-3/4 "
AT 214-4I18	707	17,800	25,400	5,890	(4) 10	159,400	16' 4-3/4 "	9' 4-1/2 "	12' 3-3/4 "
AT 214-4J18	799	18,080	25,680	6,030	(4) 15	181,100	16' 4-3/4 "	9' 4-1/2 "	12' 3-3/4 "
AT 214-4K18	871	18,280	25,880	6,130	(4) 20	198,100	16' 4-3/4 "	9' 4-1/2 "	12' 3-3/4 "
SLSF Addition		520	520	130			1' 6"	1' 6"	

NOTE: (1) An adequately sized bleed line must be installed in the cooling tower system to prevent build-up of impurities in the recirculated water.
(2) Do not use catalog drawings for certified prints. Dimensions and weights are subject to change.
(3) Adequate spacing must be allowed for access to the cooling tower. Refer to EVAPCO's Equipment Layout Manual.
(4) Nominal Tonnage is based on 3 gpm per ton at 95 degree entering water temperature, 85 degree leaving water temperature, and 78 degree wet-bulb temperature.

✧ Outlet connection extends beyond bottom flange.
† Height includes fan guard which ships factory mounted.
✦ Heaviest section is upper section.

Models: AT/UT/USS 19-2F6 to 19-4J6

One-Cell Cooling Towers

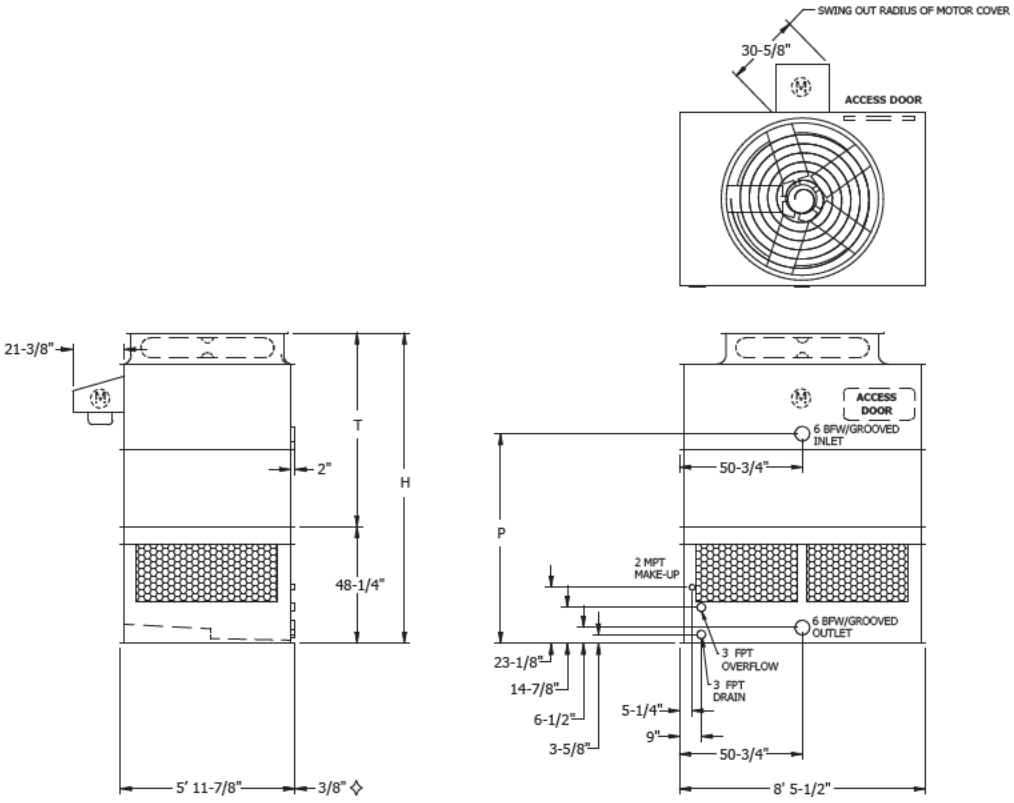

Model No.	Nominal Tonnage	WEIGHTS (LBS)			Fan Motor (HP)	Air Flow (CFM)	DIMENSIONS		
		Shipping	Operating	Heaviest Section✦			H†	T†	P
AT 19-2F6	89	3,080	5,120	1,950	3	22,600	10' 8-1/4 "	6' 8"	7' 2-1/2 "
AT 19-2G6	112	3,140	5,180	2,010	5	26,500	10' 8-1/4 "	6' 8"	7' 2-1/2 "
AT 19-2H6	123	3,180	5,220	2,050	7.5	30,200	10' 8-1/4 "	6' 8"	7' 2-1/2 "
AT 19-3F6	101	3,280	5,320	2,150	3	22,200	11' 8-1/4 "	7' 8"	8' 2-1/2 "
AT 19-3G6	124	3,340	5,380	2,210	5	26,100	11' 8-1/4 "	7' 8"	8' 2-1/2 "
AT 19-3H6	138	3,380	5,420	2,250	7.5	29,700	11' 8-1/4 "	7' 8"	8' 2-1/2 "
AT 19-3I6	150	3,410	5,450	2,280	10	32,500	11' 8-1/4 "	7' 8"	8' 2-1/2 "
AT 19-4F6	109	3,500	5,540	2,370	3	21,900	12' 8-1/4 "	8' 8"	9' 2-1/2 "
AT 19-4G6	130	3,560	5,600	2,430	5	25,700	12' 8-1/4 "	8' 8"	9' 2-1/2 "
AT 19-4H6	143	3,600	5,640	2,470	7.5	29,200	12' 8-1/4 "	8' 8"	9' 2-1/2 "
AT 19-4I6	157	3,630	5,670	2,500	10	32,000	12' 8-1/4 "	8' 8"	9' 2-1/2 "
AT 19-4J6	171	3,700	5,740	2,570	15	36,400	12' 8-1/4 "	8' 8"	9' 2-1/2 "
SLSF Addition		150	150	150			1' 1"	1' 1"	

NOTE: (1) An adequately sized bleed line must be installed in the cooling tower system to prevent build-up of impurities in the recirculated water.
(2) Do not use catalog drawings for certified prints. Dimensions and weights are subject to change.
(3) Adequate spacing must be allowed for access to the cooling tower. Refer to EVAPCO's Equipment Layout Manual.
(4) Nominal Tonnage is based on 3 gpm per ton at 95 degree entering water temperature, 85 degree leaving water temperature, and 78 degree wet-bulb temperature.

✧ Outlet connection extends beyond bottom flange.
✦ Heaviest section is upper section.
† Height includes fan guard which ships factory mounted.

Models: AT/UT/USS 26-2F17 to 26-4J17

Two-Cell Cooling Towers

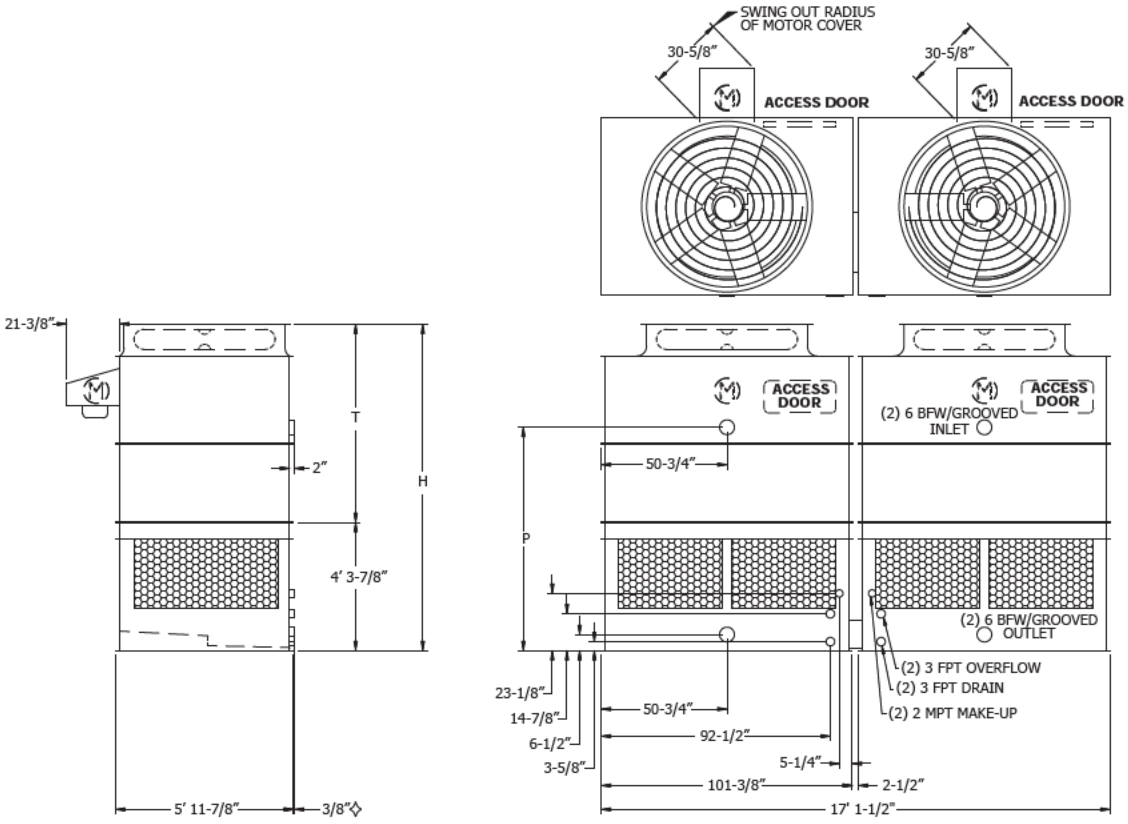

Model No.	Nominal Tonnage	WEIGHTS (LBS)			Fan Motor (HP)	Air Flow (CFM)	DIMENSIONS		
		Shipping	Operating	Heaviest Section✦			H†	T†	P
AT 26-2F17	179	6,280	10,360	1,990	(2) 3	45,200	10' 11-7/8	6' 8"	7' 6-1/8 "
AT 26-2G17	225	6,320	10,400	2,010	(2) 5	53,100	10' 11-7/8 "	6' 8"	7' 6-1/8 "
AT 26-2H17	247	6,400	10,480	2,050	(2) 7.5	60,500	10' 11-7/8 "	6' 8"	7' 6-1/8 "
AT 26-3F17	203	6,680	10,760	2,190	(2) 3	44,500	11' 11-7/8 "	7' 8"	8' 6-1/8 "
AT 26-3G17	250	6,720	10,800	2,210	(2) 5	52,300	11' 11-7/8 "	7' 8"	8' 6-1/8 "
AT 26-3H17	277	6,800	10,880	2,250	(2) 7.5	59,400	11' 11-7/8 "	7' 8"	8' 6-1/8 "
AT 26-3I17	302	6,860	10,940	2,280	(2) 10	65,100	11' 11-7/8 "	7' 8"	8' 6-1/8 "
AT 26-4F17	219	7,120	11,200	2,410	(2) 3	43,800	12' 11-7/8 "	8' 8"	9' 6-1/8 "
AT 26-4G17	262	7,160	11,240	2,430	(2) 5	51,400	12' 11-7/8 "	8' 8"	9' 6-1/8 "
AT 26-4H17	287	7,240	11,320	2,470	(2) 7.5	58,500	12' 11-7/8 "	8' 8"	9' 6-1/8 "
AT 26-4I17	315	7,300	11,380	2,500	(2) 10	64,000	12' 11-7/8 "	8' 8"	9' 6-1/8 "
AT 26-4J17	344	7,440	11,520	2,570	(2) 15	72,800	12' 11-7/8 "	8' 8"	9' 6-1/8 "
SLSF Addition		300	300	150			1' 1"	1' 1"	

NOTE: (1) An adequately sized bleed line must be installed in the cooling tower system to prevent build-up of impurities in the recirculated water.
(2) Do not use catalog drawings for certified prints. Dimensions and weights are subject to change.
(3) Adequate spacing must be allowed for access to the cooling tower. Refer to EVAPCO's Equipment Layout Manual.
(4) Nominal Tonnage is based on 3 gpm per ton at 95 degree entering water temperature, 85 degree leaving water temperature, and 78 degree wet-bulb temperature.

◇ Outlet connection extends beyond bottom flange.
† Height includes fan guard which ships factory mounted.
✦ Heaviest section is upper section.

Models: AT/UT/USS 212-2F9 to 212-4J9

Two-Cell Cooling Towers

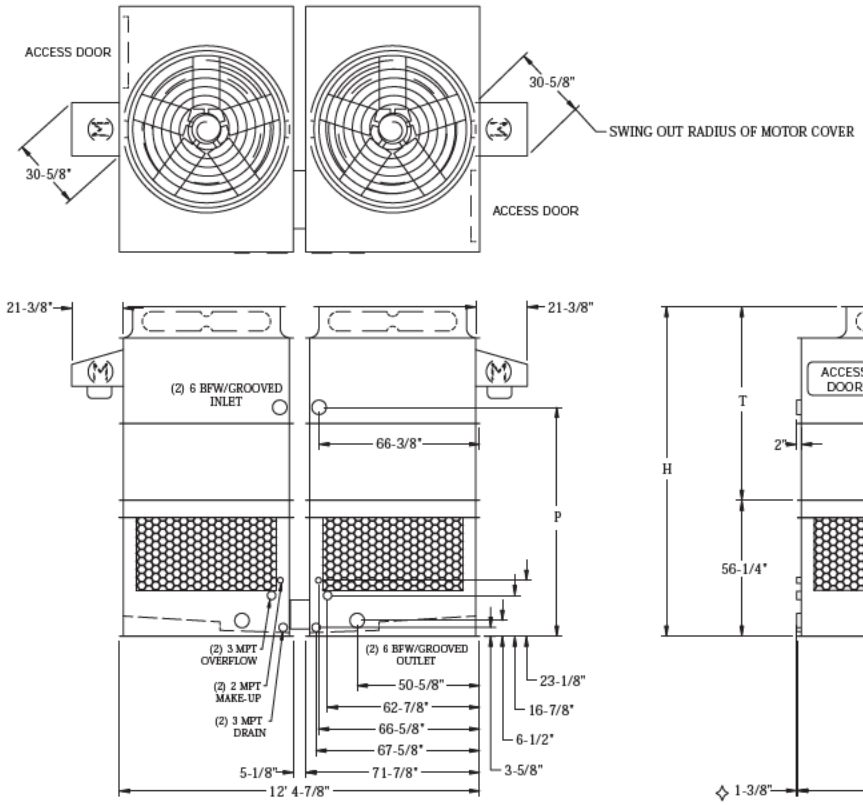

Model No.	Nominal Tonnage	WEIGHTS (LBS)			Fan Motor (HP)	Air Flow (CFM)	DIMENSIONS		
		Shipping	Operating	Heaviest Section✦			H†	T†	P
AT 212-2F9	179	6,360	10,440	1,990	(2) 3	45,200	11' 4-1/4 "	6' 8"	7' 10 1/2 "
AT 212-2G9	225	6,400	10,480	2,010	(2) 5	53,100	11' 4-1/4 "	6' 8"	7' 10 1/2 "
AT 212-2H9	247	6,480	10,560	2,050	(2) 7.5	60,500	11' 4-1/4 "	6' 8"	7' 10 1/2 "
AT 212-3F9	203	6,760	10,840	2,190	(2) 3	44,500	12' 4-1/4 "	7' 8"	8' 10 1/2 "
AT 212-3G9	250	6,800	10,880	2,210	(2) 5	52,300	12' 4-1/4 "	7' 8"	8' 10 1/2 "
AT 212-3H9	277	6,880	10,960	2,250	(2) 7.5	59,400	12' 4-1/4 "	7' 8"	8' 10 1/2 "
AT 212-3I9	302	6,940	11,020	2,280	(2) 10	65,100	12' 4-1/4 "	7' 8"	8' 10 1/2 "
AT 212-4F9	219	7,200	11,280	2,410	(2) 3	43,800	13' 4-1/4 "	8' 8"	9' 10 1/2 "
AT 212-4G9	262	7,240	11,320	2,430	(2) 5	51,400	13' 4-1/4 "	8' 8"	9' 10 1/2 "
AT 212-4H9	287	7,320	11,400	2,470	(2) 7.5	58,500	13' 4-1/4 "	8' 8"	9' 10 1/2 "
AT 212-4I9	315	7,380	11,460	2,500	(2) 10	64,000	13' 4-1/4 "	8' 8"	9' 10 1/2 "
AT 212-4J9	344	7,520	11,600	2,570	(2) 15	72,800	13' 4-1/4 "	8' 8"	9' 10 1/2 "
SLSF Addition		300	300	150			1' 1"	1' 1"	

NOTE: (1) An adequately sized bleed line must be installed in the cooling tower system to prevent build-up of impurities in the recirculated water.
(2) Do not use catalog drawings for certified prints. Dimensions and weights are subject to change.
(3) Adequate spacing must be allowed for access to the cooling tower. Refer to EVAPCO's Equipment Layout Manual.
(4) Nominal Tonnage is based on 3 gpm per ton at 95 degree entering water temperature, 85 degree leaving water temperature, and 78 degree wet-bulb temperature.

✧ Outlet connection extends beyond bottom flange.
✦ Heaviest section is upper section.
† Height includes fan guard which ships factory mounted.

Models: AT/UT/USS 19-2F8 to 19-4J8

One-Cell Cooling Towers

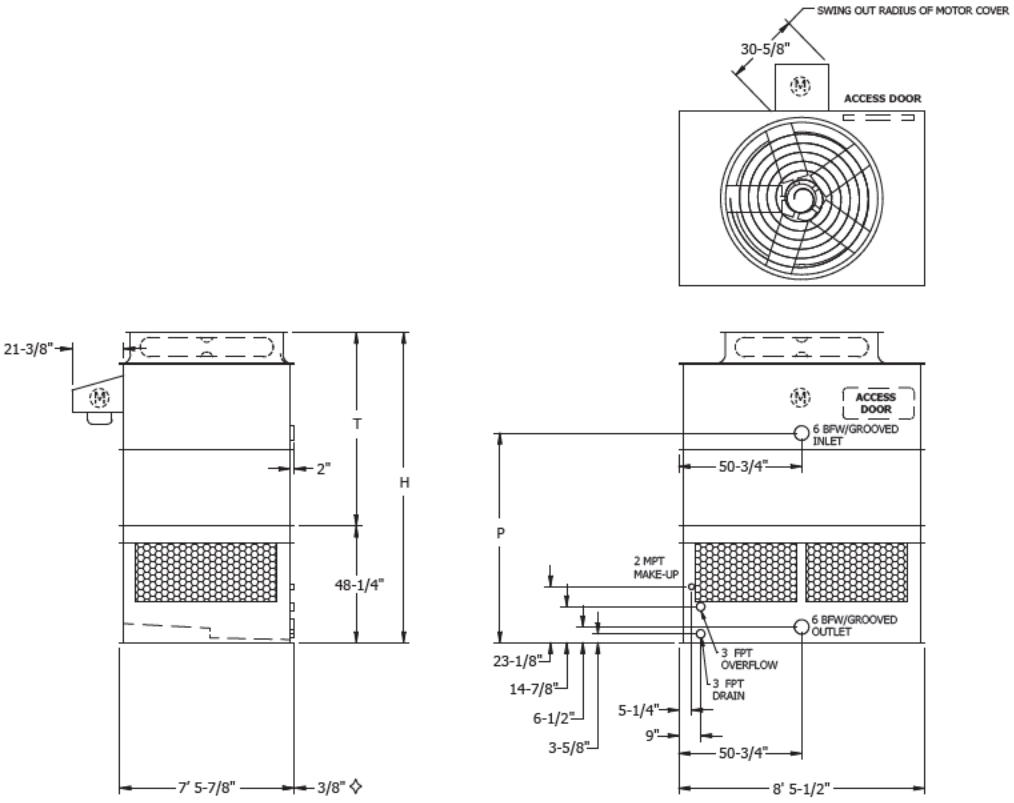

Model No.	Nominal Tonnage	WEIGHTS (LBS)			Fan Motor (HP)	Air Flow (CFM)	DIMENSIONS		
		Shipping	Operating	Heaviest Section✦			H†	T†	P
AT 19-2F8	109	3,490	5,910	2,220	3	26,600	10' 8-1/4 "	6' 8"	7' 2-1/2 "
AT 19-2G8	137	3,550	5,970	2,280	5	31,300	10' 8-1/4 "	6' 8"	7' 2-1/2 "
AT 19-2H8	148	3,590	6,010	2,320	7.5	35,700	10' 8-1/4 "	6' 8"	7' 2-1/2 "
AT 19-2I8	159	3,620	6,040	2,350	10	39,200	10' 8-1/4 "	6' 8"	7' 2-1/2 "
AT 19-3F8	123	3,720	6,140	2,450	3	26,200	11' 8-1/4 "	7' 8"	8' 2-1/2 "
AT 19-3G8	152	3,780	6,200	2,510	5	30,800	11' 8-1/4 "	7' 8"	8' 2-1/2 "
AT 19-3H8	165	3,820	6,240	2,550	7.5	35,100	11' 8-1/4 "	7' 8"	8' 2-1/2 "
AT 19-3I8	179	3,850	6,270	2,580	10	38,400	11' 8-1/4 "	7' 8"	8' 2-1/2 "
AT 19-3J8	197	3,910	6,330	2,640	15	43,700	11' 8-1/4 "	7' 8"	8' 2-1/2 "
AT 19-4F8	133	3,990	6,410	2,720	3	25,800	12' 8-1/4 "	8' 8"	9' 2-1/2 "
AT 19-4G8	159	4,050	6,470	2,780	5	30,300	12' 8-1/4 "	8' 8"	9' 2-1/2 "
AT 19-4H8	173	4,090	6,510	2,820	7.5	34,500	12' 8-1/4 "	8' 8"	9' 2-1/2 "
AT 19-4I8	187	4,120	6,540	2,850	10	37,800	12' 8-1/4 "	8' 8"	9' 2-1/2 "
AT 19-4J8	207	4,180	6,600	2,910	15	43,000	12' 8-1/4 "	8' 8"	9' 2-1/2 "
SLSF Addition		150	150	150			1' 5"	1' 5"	

NOTE: (1) An adequately sized bleed line must be installed in the cooling tower system to prevent build-up of impurities in the recirculated water.
(2) Do not use catalog drawings for certified prints. Dimensions and weights are subject to change.
(3) Adequate spacing must be allowed for access to the cooling tower. Refer to EVAPCO's Equipment Layout Manual.
(4) Nominal Tonnage is based on 3 gpm per ton at 95 degree entering water temperature, 85 degree leaving water temperature, and 78 degree wet-bulb temperature.

✧ Outlet connection extends beyond bottom flange.
✦ Heaviest section is upper section.
† Height includes fan guard which ships factory mounted.

Models: AT/UT/USS 28-2F17 to 28-4J17

Two-Cell Cooling Towers

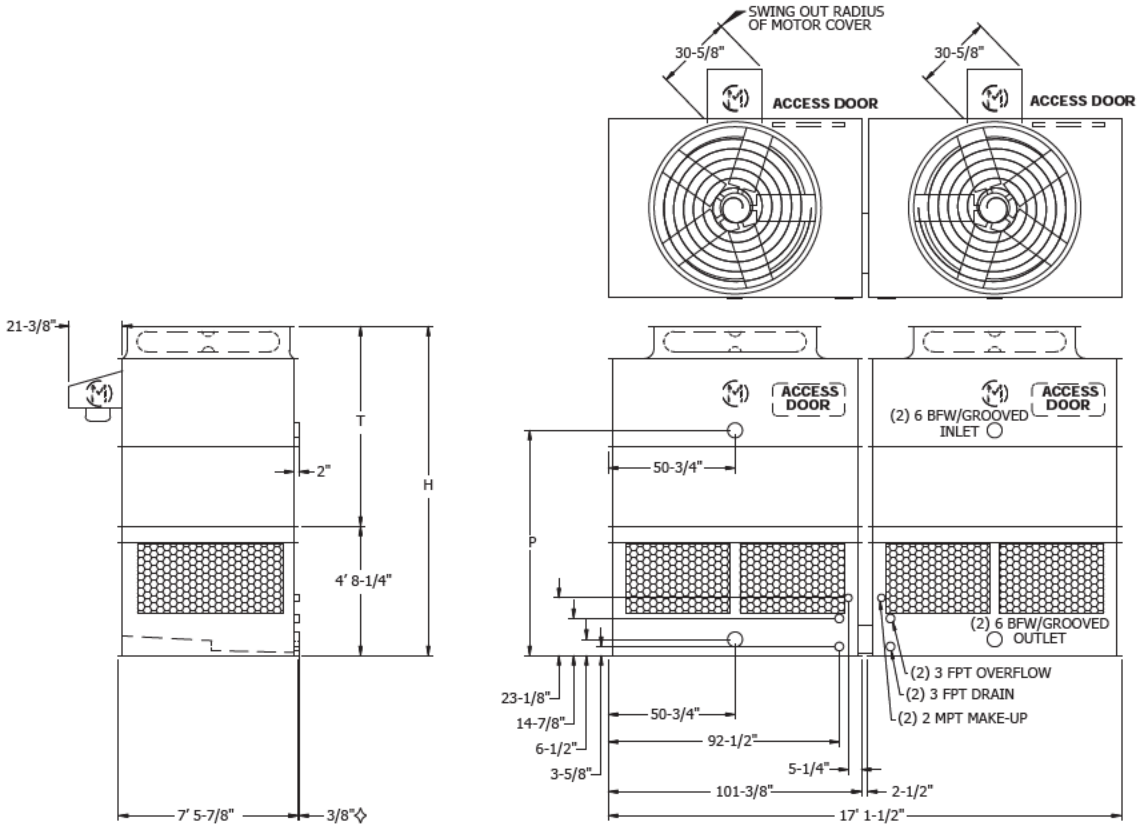

Model No.	Nominal Tonnage	WEIGHTS (LBS)			Fan Motor (HP)	Air Flow (CFM)	DIMENSIONS		
		Shipping	Operating	Heaviest Section✦			H†	T†	P
AT 28-2F17	217	7,140	11,980	2,260	(2) 3	53,200	11' 4-1/4"	6' 8"	7' 10-1/2"
AT 28-2G17	274	7,180	12,020	2,280	(2) 5	62,600	11' 4-1/4"	6' 8"	7' 10-1/2"
AT 28-2H17	297	7,260	12,100	2,320	(2) 7.5	71,400	11' 4-1/4"	6' 8"	7' 10-1/2"
AT 28-2I17	319	7,320	12,160	2,350	(2) 10	78,300	11' 4-1/4"	6' 8"	7' 10-1/2"
AT 28-3F17	247	7,600	12,440	2,490	(2) 3	52,500	12' 4-1/4"	7' 8"	8' 10-1/2"
AT 28-3G17	304	7,640	12,480	2,510	(2) 5	61,600	12' 4-1/4"	7' 8"	8' 10-1/2"
AT 28-3H17	331	7,720	12,560	2,550	(2) 7.5	70,200	12' 4-1/4"	7' 8"	8' 10-1/2"
AT 28-3I17	358	7,780	12,620	2,580	(2) 10	76,900	12' 4-1/4"	7' 8"	8' 10-1/2"
AT 28-3J17	393	7,900	12,740	2,640	(2) 15	87,500	12' 4-1/4"	7' 8"	8' 10-1/2"
AT 28-4F17	267	8,140	12,980	2,760	(2) 3	51,600	13' 4-1/4"	8' 8"	9' 10-1/2"
AT 28-4G17	319	8,180	13,020	2,780	(2) 5	60,600	13' 4-1/4"	8' 8"	9' 10-1/2"
AT 28-4H17	346	8,260	13,100	2,820	(2) 7.5	69,100	13' 4-1/4"	8' 8"	9' 10-1/2"
AT 28-4I17	373	8,320	13,160	2,850	(2) 10	75,700	13' 4-1/4"	8' 8"	9' 10-1/2"
AT 28-4J17	414	8,440	13,280	2,910	(2) 15	86,000	13' 4-1/4"	8' 8"	9' 10-1/2"
SLSF Addition		300	300	150			1' 5"	1' 5"	

NOTE: (1) An adequately sized bleed line must be installed in the cooling tower system to prevent build-up of impurities in the recirculated water.
(2) Do not use catalog drawings for certified prints. Dimensions and weights are subject to change.
(3) Adequate spacing must be allowed for access to the cooling tower. Refer to EVAPCO's Equipment Layout Manual.
(4) Nominal Tonnage is based on 3 gpm per ton at 95 degree entering water temperature, 85 degree leaving water temperature, and 78 degree wet-bulb temperature.

✧ Outlet connection extends beyond bottom flange.
† Height includes fan guard which ships factory mounted.
✦ Heaviest section is upper section.

Models: AT/UT/USS 215-2F9 to 215-4J9

Two-Cell Cooling Towers

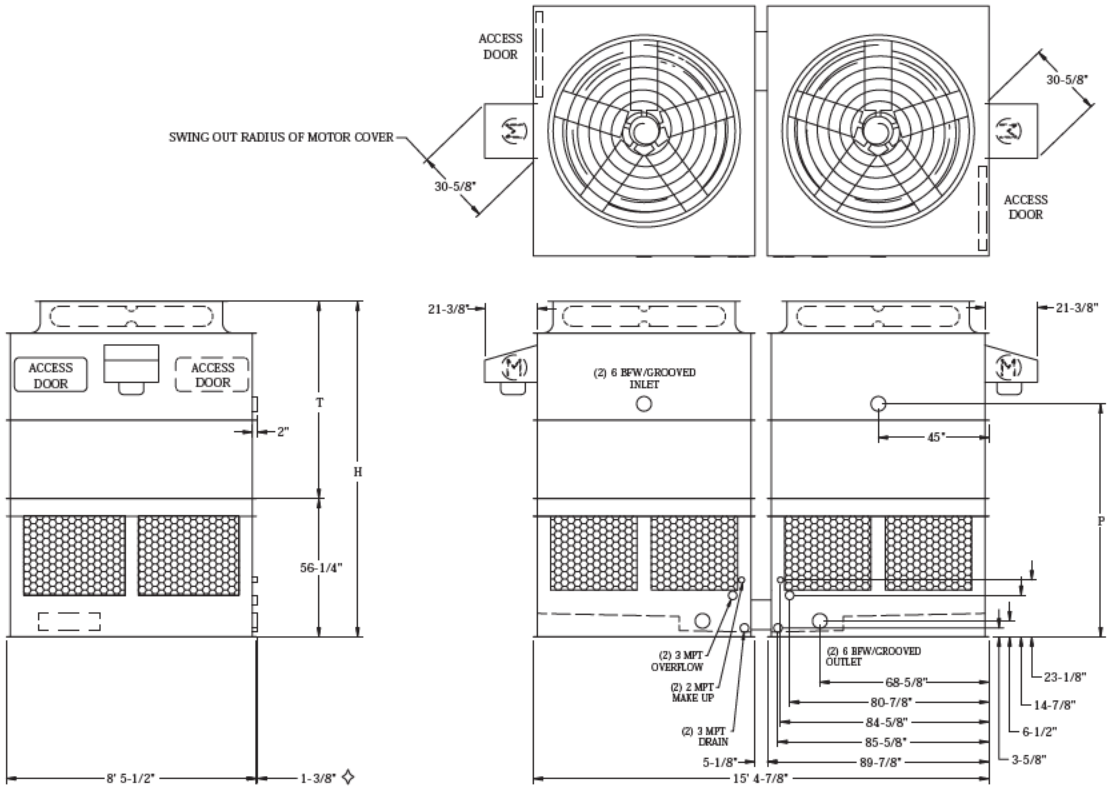

Model No.	Nominal Tonnage	WEIGHTS (LBS)			Fan Motor (HP)	Air Flow (CFM)	DIMENSIONS		
		Shipping	Operating	Heaviest Section✦			H†	T†	P
AT 215-2F9	217	7,200	12,040	2,260	(2) 3	53,200	11' 4-1/4"	6' 8"	7' 10-1/2"
AT 215-2G9	274	7,240	12,080	2,280	(2) 5	62,600	11' 4-1/4"	6' 8"	7' 10-1/2"
AT 215-2H9	297	7,320	12,160	2,320	(2) 7.5	71,400	11' 4-1/4"	6' 8"	7' 10-1/2"
AT 215-2I9	319	7,380	12,220	2,350	(2) 10	78,300	11' 4-1/4"	6' 8"	7' 10-1/2"
AT 215-3F9	247	7,660	12,500	2,490	(2) 3	52,500	12' 4-1/4"	7' 8"	8' 10-1/2"
AT 215-3G9	304	7,700	12,540	2,510	(2) 5	61,600	12' 4-1/4"	7' 8"	8' 10-1/2"
AT 215-3H9	331	7,780	12,620	2,550	(2) 7.5	70,200	12' 4-1/4"	7' 8"	8' 10-1/2"
AT 215-3I9	358	7,840	12,680	2,580	(2) 10	76,900	12' 4-1/4"	7' 8"	8' 10-1/2"
AT 215-3J9	393	7,960	12,800	2,640	(2) 15	87,500	12' 4-1/4"	7' 8"	8' 10-1/2"
AT 215-4F9	267	8,200	13,040	2,760	(2) 3	51,600	13' 4-1/4"	8' 8"	9' 10-1/2"
AT 215-4G9	319	8,240	13,080	2,780	(2) 5	60,600	13' 4-1/4"	8' 8"	9' 10-1/2"
AT 215-4H9	346	8,320	13,160	2,820	(2) 7.5	69,100	13' 4-1/4"	8' 8"	9' 10-1/2"
AT 215-4I9	373	8,380	13,220	2,850	(2) 10	75,700	13' 4-1/4"	8' 8"	9' 10-1/2"
AT 215-4J9	414	8,500	13,340	2,910	(2) 15	86,000	13' 4-1/4"	8' 8"	9' 10-1/2"
SLSF Addition		300	300	150			1' 5"	1' 5"	

NOTE: (1) An adequately sized bleed line must be installed in the cooling tower system to prevent build-up of impurities in the recirculated water.
(2) Do not use catalog drawings for certified prints. Dimensions and weights are subject to change.
(3) Adequate spacing must be allowed for access to the cooling tower. Refer to EVAPCO's Equipment Layout Manual.
(4) Nominal Tonnage is based on 3 gpm per ton at 95 degree entering water temperature, 85 degree leaving water temperature, and 78 degree wet-bulb temperature.

✧ Outlet connection extends beyond bottom flange.
† Height includes fan guard which ships factory mounted.
✦ Heaviest section is upper section.

* Model available with gear drive only. Motors and access doors located on 13' 11-1/4" unit ends. Super Low Sound Fan is not available on this unit.

Models: AT/UT/USS 19-2G9 to 19-4K9

One-Cell Cooling Towers

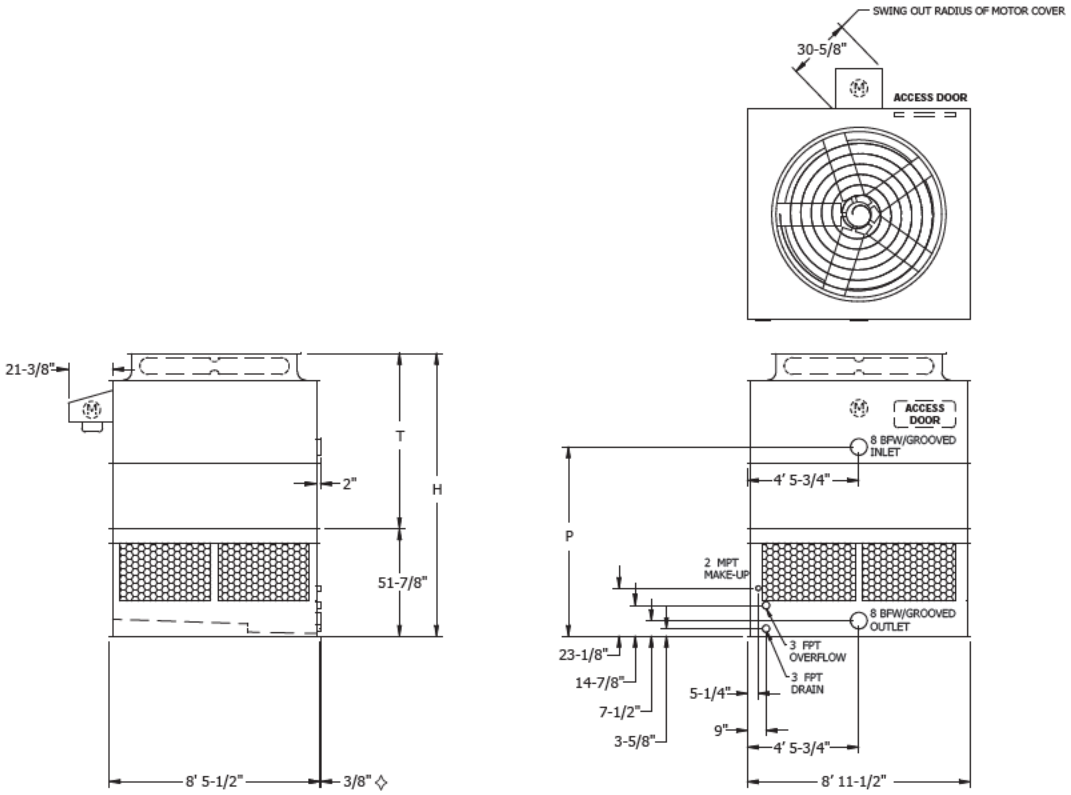

Model No.	Nominal Tonnage	WEIGHTS (LBS)			Fan Motor (HP)	Air Flow (CFM)	DIMENSIONS		
		Shipping	Operating	Heaviest Section✦			H†	T†	P
AT 19-2G9	135	4,110	6,950	2,670	5	35,900	11' 4-3/8"	7' 1/2"	7' 7-1/8"
AT 19-2H9	162	4,150	6,990	2,710	7.5	40,800	11' 4-3/8"	7' 1/2"	7' 7-1/8"
AT 19-2I9	178	4,180	7,020	2,740	10	44,700	11' 4-3/8"	7' 1/2"	7' 7-1/8"
AT 19-2J9	208	4,250	7,090	2,810	15	50,800	11' 4-3/8"	7' 1/2"	7' 7-1/8"
AT 19-3G9	154	4,380	7,220	2,940	5	35,300	12' 4-3/8"	8' 1/2"	8' 7-1/8"
AT 19-3H9	181	4,420	7,260	2,980	7.5	40,100	12' 4-3/8"	8' 1/2"	8' 7-1/8"
AT 19-3I9	199	4,450	7,290	3,010	10	43,900	12' 4-3/8"	8' 1/2"	8' 7-1/8"
AT 19-3J9	232	4,520	7,360	3,080	15	49,800	12' 4-3/8"	8' 1/2"	8' 7-1/8"
AT 19-4G9	165	4,690	7,530	3,250	5	34,700	13' 4-3/8"	9' 1/2"	9' 7-1/8"
AT 19-4H9	191	4,730	7,570	3,290	7.5	39,500	13' 4-3/8"	9' 1/2"	9' 7-1/8"
AT 19-4I9	209	4,760	7,600	3,320	10	43,200	13' 4-3/8"	9' 1/2"	9' 7-1/8"
AT 19-4J9	242	4,830	7,670	3,390	15	49,000	13' 4-3/8"	9' 1/2"	9' 7-1/8"
AT 19-4K9	265	4,880	7,720	3,440	20	53,600	13' 4-3/8"	9' 1/2"	9' 7-1/8"
SLSF Addition		150	150	150			1' 9"	1' 9"	

NOTE: (1) An adequately sized bleed line must be installed in the cooling tower system to prevent build-up of impurities in the recirculated water.
(2) Do not use catalog drawings for certified prints. Dimensions and weights are subject to change.
(3) Adequate spacing must be allowed for access to the cooling tower. Refer to EVAPCO's Equipment Layout Manual.
(4) Nominal Tonnage is based on 3 gpm per ton at 95 degree entering water temperature, 85 degree leaving water temperature, and 78 degree wet-bulb temperature.

✧ Outlet connection extends beyond bottom flange.
† Height includes fan guard which ships factory mounted.
✦ Heaviest section is upper section.

Models: AT/UT/USS 29-2G18 to 29-4K18

Two-Cell Cooling Towers

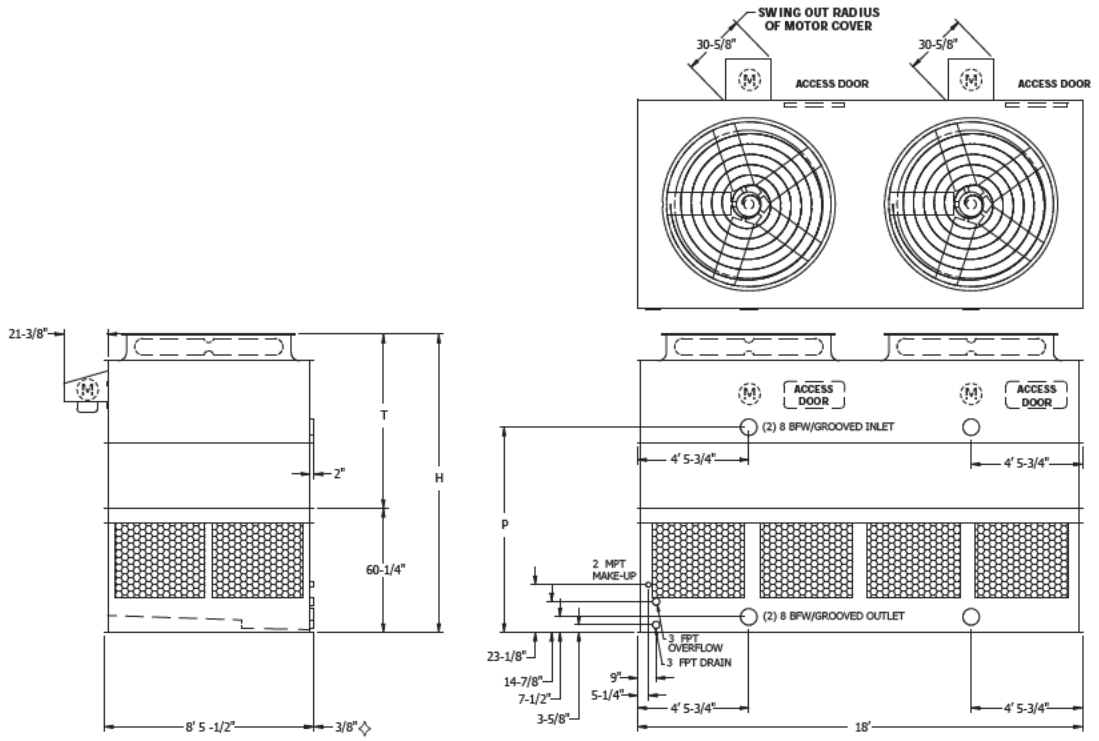

Model No.	Nominal Tonnage	WEIGHTS (LBS)			Fan Motor (HP)	Air Flow (CFM)	DIMENSIONS		
		Shipping	Operating	Heaviest Section✦			H†	T†	P
AT 29-2G18	274	8,110	14,000	5,290	5	72,000	12' 3/4"	7' 1/2"	8' 3-1/2"
AT 29-2H18	329	8,190	14,080	5,370	7.5	81,900	12' 3/4"	7' 1/2"	8' 3-1/2"
AT 29-2I18	362	8,250	14,140	5,430	10	89,800	12' 3/4"	7' 1/2"	8' 3-1/2"
AT 29-2J18	422	8,390	14,280	5,570	15	102,000	12' 3/4"	7' 1/2"	8' 3-1/2"
AT 29-3G18	312	8,640	14,530	5,820	5	70,900	13' 3/4"	8' 1/2"	9' 3-1/2"
AT 29-3H18	368	8,720	14,610	5,900	7.5	80,600	13' 3/4"	8' 1/2"	9' 3-1/2"
AT 29-3I18	404	8,780	14,670	5,960	10	88,200	13' 3/4"	8' 1/2"	9' 3-1/2"
AT 29-3J18	471	8,920	14,810	6,100	15	100,000	13' 3/4"	8' 1/2"	9' 3-1/2"
AT 29-4G18	335	9,220	15,110	6,400	5	69,700	14' 3/4"	9' 1/2"	10' 3-1/2"
AT 29-4H18	387	9,300	15,190	6,480	7.5	79,300	14' 3/4"	9' 1/2"	10' 3-1/2"
AT 29-4I18	425	9,360	15,250	6,540	10	86,800	14' 3/4"	9' 1/2"	10' 3-1/2"
AT 29-4J18	491	9,500	15,390	6,680	15	98,400	14' 3/4"	9' 1/2"	10' 3-1/2"
AT 29-4K18	538	9,600	15,490	6,780	20	107,600	14' 3/4"	9' 1/2"	10' 3-1/2"
SLSF Addition		300	300	150			1' 9"	1' 9"	

NOTE: (1) An adequately sized bleed line must be installed in the cooling tower system to prevent build-up of impurities in the recirculated water.
(2) Do not use catalog drawings for certified prints. Dimensions and weights are subject to change.
(3) Adequate spacing must be allowed for access to the cooling tower. Refer to EVAPCO's Equipment Layout Manual.
(4) Nominal Tonnage is based on 3 gpm per ton at 95 degree entering water temperature, 85 degree leaving water temperature, and 78 degree wet-bulb temperature.

✧ Outlet connection extends beyond bottom flange.
† Height includes fan guard which ships factory mounted.
✦ Heaviest section is upper section.

Models: AT/UT/USS 217-2G9 to 217-4K9

Two-Cell Cooling Towers

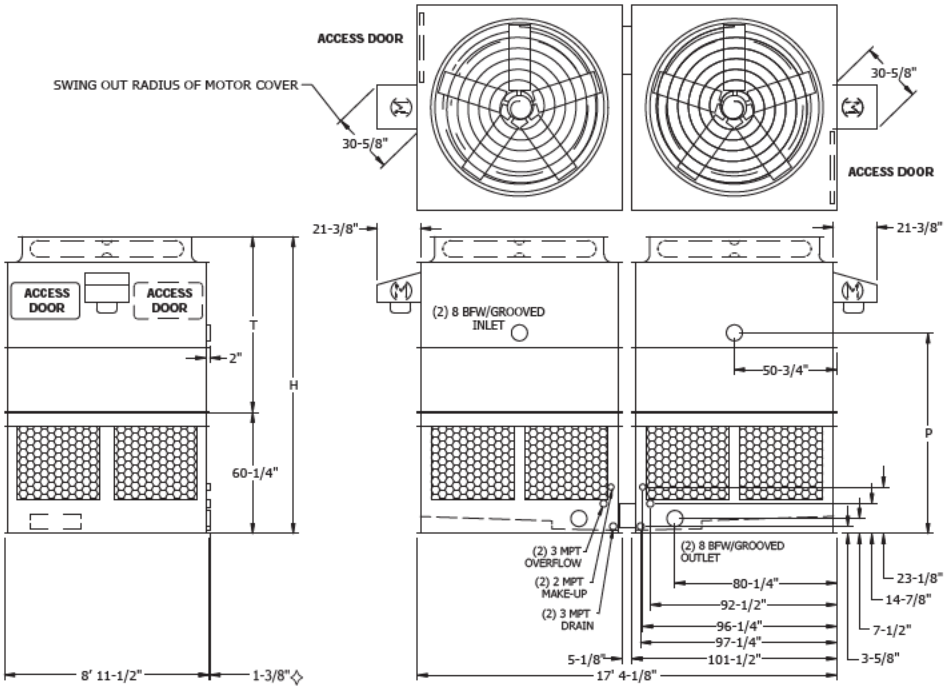

Model No.	Nominal Tonnage	WEIGHTS (LBS)			Fan Motor (HP)	Air Flow (CFM)	DIMENSIONS		
		Shipping	Operating	Heaviest Section✦			H†	T†	P
AT 217-2G9	270	8,420	14,100	2,670	(2) 5	71,700	12' 3-3/8"	7' 3-1/8"	8' 6-1/8"
AT 217-2H9	324	8,500	14,180	2,710	(2) 7.5	81,500	12' 3-3/8"	7' 3-1/8"	8' 6-1/8"
AT 217-2I9	356	8,560	14,240	2,740	(2) 10	89,300	12' 3-3/8"	7' 3-1/8"	8' 6-1/8"
AT 217-2J9	416	8,700	14,380	2,810	(2) 15	101,500	12' 3-3/8"	7' 3-1/8"	8' 6-1/8"
AT 217-3G9	308	8,960	14,640	2,940	(2) 5	70,600	13' 3-3/8"	8' 3-1/8"	9' 6-1/8"
AT 217-3H9	362	9,040	14,720	2,980	(2) 7.5	80,200	13' 3-3/8"	8' 3-1/8"	9' 6-1/8"
AT 217-3I9	399	9,100	14,780	3,010	(2) 10	87,800	13' 3-3/8"	8' 3-1/8"	9' 6-1/8"
AT 217-3J9	464	9,240	14,920	3,080	(2) 15	99,500	13' 3-3/8"	8' 3-1/8"	9' 6-1/8"
AT 217-4G9	330	9,580	15,260	3,250	(2) 5	69,400	14' 3-3/8"	9' 3-1/8"	10' 6-1/8"
AT 217-4H9	381	9,660	15,340	3,290	(2) 7.5	78,900	14' 3-3/8"	9' 3-1/8"	10' 6-1/8"
AT 217-4I9	418	9,720	15,400	3,320	(2) 10	86,400	14' 3-3/8"	9' 3-1/8"	10' 6-1/8"
AT 217-4J9	484	9,860	15,540	3,390	(2) 15	97,900	14' 3-3/8"	9' 3-1/8"	10' 6-1/8"
AT 217-4K9	530	9,960	15,640	3,440	(2) 20	107,100	14' 3-3/8"	9' 3-1/8"	10' 6-1/8"
SLSF Addition		300	300	150			1' 9"	1' 9"	

NOTE: (1) An adequately sized bleed line must be installed in the cooling tower system to prevent build-up of impurities in the recirculated water.
(2) Do not use catalog drawings for certified prints. Dimensions and weights are subject to change.
(3) Adequate spacing must be allowed for access to the cooling tower. Refer to EVAPCO's Equipment Layout Manual.
(4) Nominal Tonnage is based on 3 gpm per ton at 95 degree entering water temperature, 85 degree leaving water temperature, and 78 degree wet-bulb temperature.

◊ Outlet connection extends beyond bottom flange.
✦ Heaviest section is upper section.
† Height includes fan guard which ships factory mounted.

Models: AT/UT/USS 19-2G11 to 19-4L11

One-Cell Cooling Towers

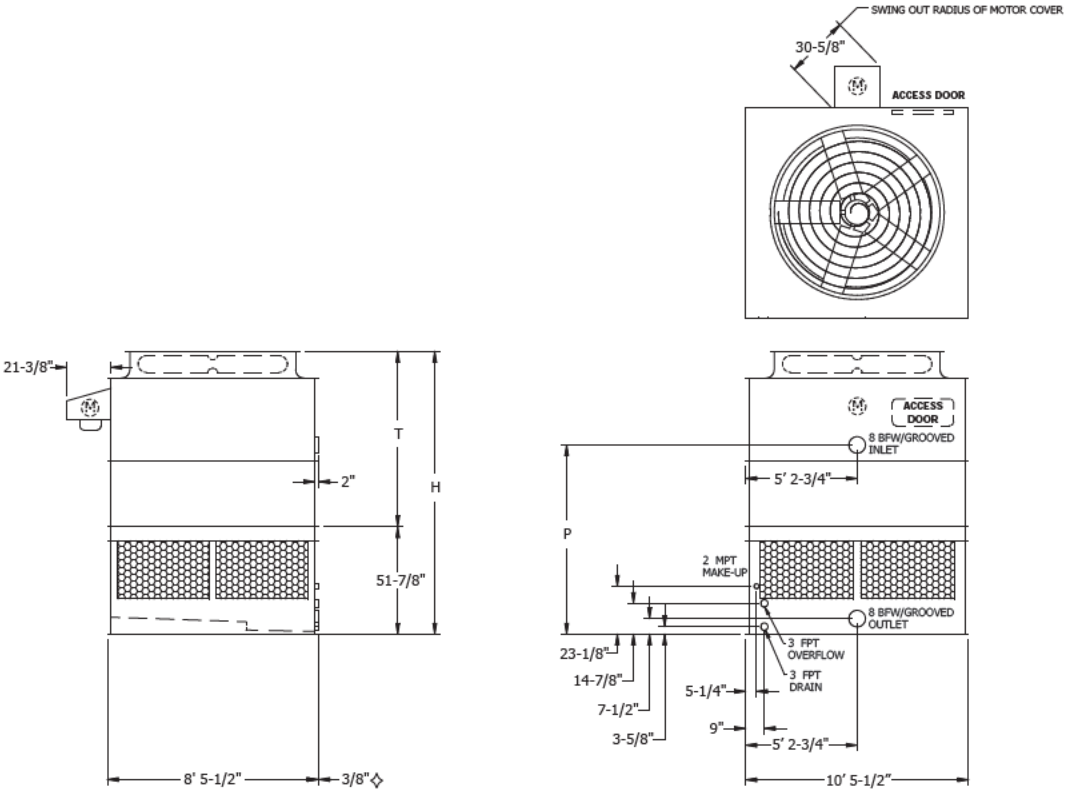

Model No.	Nominal Tonnage	WEIGHTS (LBS)			Fan Motor (HP)	Air Flow (CFM)	DIMENSIONS		
		Shipping	Operating	Heaviest Section✦			H†	T†	P
AT 19-2G11	156	4,660	7,960	3,060	5	40,200	11' 4-3/8"	7' 1/2"	7' 7-1/8"
AT 19-2H11	187	4,700	8,000	3,100	7.5	45,700	11' 4-3/8"	7' 1/2"	7' 7-1/8"
AT 19-2I11	202	4,730	8,030	3,130	10	50,200	11' 4-3/8"	7' 1/2"	7' 7-1/8"
AT 19-2J11	231	4,800	8,100	3,200	15	57,100	11' 4-3/8"	7' 1/2"	7' 7-1/8"
AT 19-3G11	172	4,980	8,280	3,380	5	39,700	12' 4-3/8"	8' 1/2"	8' 7-1/8"
AT 19-3H11	202	5,020	8,320	3,420	7.5	45,100	12' 4-3/8"	8' 1/2"	8' 7-1/8"
AT 19-3I11	221	5,050	8,350	3,450	10	49,400	12' 4-3/8"	8' 1/2"	8' 7-1/8"
AT 19-3J11	256	5,120	8,420	3,520	15	56,100	12' 4-3/8"	8' 1/2"	8' 7-1/8"
AT 19-3K11	285	5,170	8,470	3,570	20	61,300	12' 4-3/8"	8' 1/2"	8' 7-1/8"
AT 19-4G11	190	5,330	8,630	3,730	5	39,000	13' 4-3/8"	9' 1/2"	9' 7-1/8"
AT 19-4H11	220	5,370	8,670	3,770	7.5	44,300	13' 4-3/8"	9' 1/2"	9' 7-1/8"
AT 19-4I11	238	5,400	8,700	3,800	10	48,600	13' 4-3/8"	9' 1/2"	9' 7-1/8"
AT 19-4J11	270	5,470	8,770	3,870	15	55,100	13' 4-3/8"	9' 1/2"	9' 7-1/8"
AT 19-4K11	298	5,520	8,820	3,920	20	60,300	13' 4-3/8"	9' 1/2"	9' 7-1/8"
AT 19-4L11	314	5,550	8,850	3,950	25	64,600	13' 4-3/8"	9' 1/2"	9' 7-1/8"
SLSF Addition		150	150	150			1' 9"	1' 9"	

NOTE: (1) An adequately sized bleed line must be installed in the cooling tower system to prevent build-up of impurities in the recirculated water.
(2) Do not use catalog drawings for certified prints. Dimensions and weights are subject to change.
(3) Adequate spacing must be allowed for access to the cooling tower. Refer to EVAPCO's Equipment Layout Manual.
(4) Nominal Tonnage is based on 3 gpm per ton at 95 degree entering water temperature, 85 degree leaving water temperature, and 78 degree wet-bulb temperature.

✧ Outlet connection extends beyond bottom flange.
† Height includes fan guard which ships factory mounted.
✦ Heaviest section is upper section.

Models: AT/UT/USS 29-2G21 to 29-4L21

Two-Cell Cooling Towers

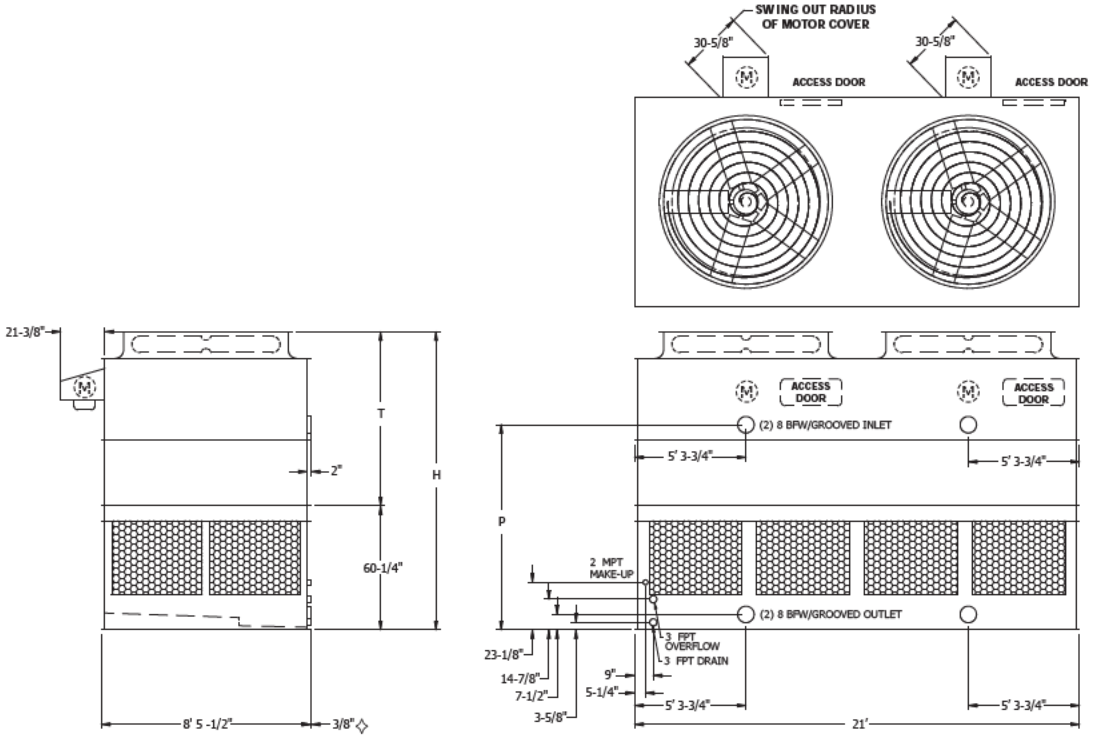

Model No.	Nominal Tonnage	WEIGHTS (LBS)			Fan Motor (HP)	Air Flow (CFM)	DIMENSIONS		
		Shipping	Operating	Heaviest Section✦			H†	T†	P
AT 29-2G21	315	9,320	16,260	6,130	(2) 5	80,700	12' 3/4"	7' 1/2"	8' 3-1/2"
AT 29-2H21	379	9,400	16,340	6,210	(2) 7.5	91,800	12' 3/4"	7' 1/2"	8' 3-1/2"
AT 29-2I21	408	9,460	16,400	6,270	(2) 10	100,700	12' 3/4"	7' 1/2"	8' 3-1/2"
AT 29-2J21	467	9,600	16,540	6,410	(2) 15	114,600	12' 3/4"	7' 1/2"	8' 3-1/2"
AT 29-3G21	347	9,930	16,870	6,740	(2) 5	79,600	13' 3/4"	8' 1/2"	9' 3-1/2"
AT 29-3H21	410	10,010	16,950	6,820	(2) 7.5	90,500	13' 3/4"	8' 1/2"	9' 3-1/2"
AT 29-3I21	448	10,070	17,010	6,880	(2) 10	99,100	13' 3/4"	8' 1/2"	9' 3-1/2"
AT 29-3J21	518	10,210	17,150	7,020	(2) 15	112,500	13' 3/4"	8' 1/2"	9' 3-1/2"
AT 29-3K21	578	10,310	17,250	7,120	(2) 20	123,000	13' 3/4"	8' 1/2"	9' 3-1/2"
AT 29-4G21	383	10,590	17,530	7,400	(2) 5	78,200	14' 3/4"	9' 1/2"	10' 3-1/2"
AT 29-4H21	445	10,670	17,610	7,480	(2) 7.5	88,900	14' 3/4"	9' 1/2"	10' 3-1/2"
AT 29-4I21	482	10,730	17,670	7,540	(2) 10	97,400	14' 3/4"	9' 1/2"	10' 3-1/2"
AT 29-4J21	547	10,870	17,810	7,680	(2) 15	110,600	14' 3/4"	9' 1/2"	10' 3-1/2"
AT 29-4K21	604	10,970	17,910	7,780	(2) 20	120,900	14' 3/4"	9' 1/2"	10' 3-1/2"
AT 29-4L21	636	11,030	17,970	7,840	(2) 25	129,700	14' 3/4"	9' 1/2"	10' 3-1/2"
SLSF Addition		300	300	150			1' 9"	1' 9"	

NOTE: (1) An adequately sized bleed line must be installed in the cooling tower system to prevent build-up of impurities in the recirculated water.
(2) Do not use catalog drawings for certified prints. Dimensions and weights are subject to change.
(3) Adequate spacing must be allowed for access to the cooling tower. Refer to EVAPCO's Equipment Layout Manual.
(4) Nominal Tonnage is based on 3 gpm per ton at 95 degree entering water temperature, 85 degree leaving water temperature, and 78 degree wet-bulb temperature.

✧ Outlet connection extends beyond bottom flange.
† Height includes fan guard which ships factory mounted.
✦ Heaviest section is upper section.

Models: AT/UT/USS 217-2G11 to 217-4L11

Two-Cell Cooling Towers

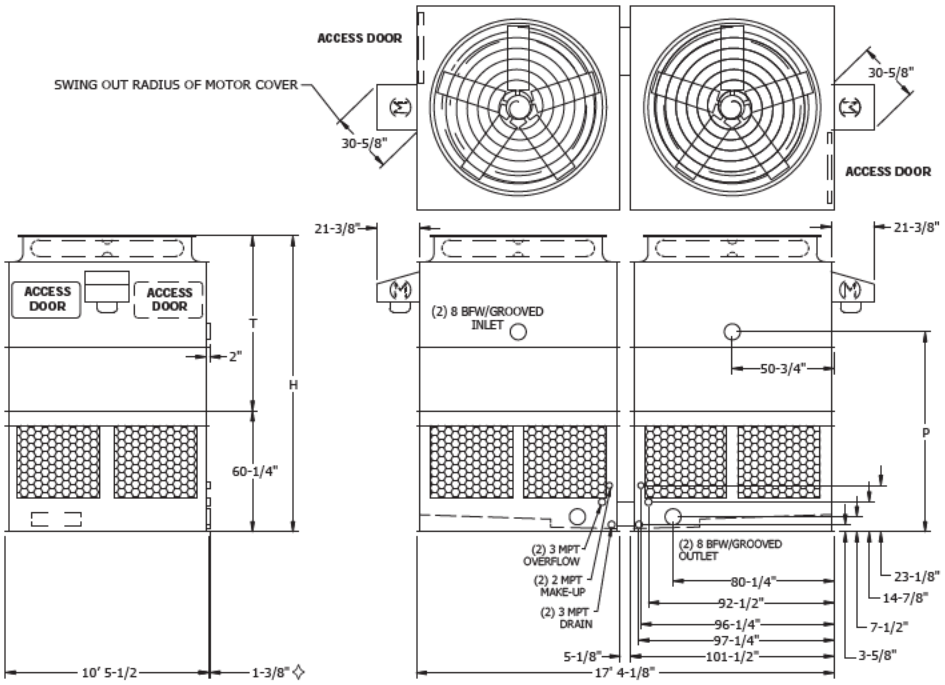

Model No.	Nominal Tonnage	WEIGHTS (LBS)			Fan Motor (HP)	Air Flow (CFM)	DIMENSIONS		
		Shipping	Operating	Heaviest Section✦			H†	T†	P
AT 217-2G11	316	9,560	16,160	3,060	(2) 5	80,700	12' 3-3/8"	7' 3-1/8"	8' 6-1/8"
AT 217-2H11	379	9,640	16,240	3,100	(2) 7.5	91,800	12' 3-3/8"	7' 3-1/8"	8' 6-1/8"
AT 217-2I11	408	9,700	16,300	3,130	(2) 10	100,700	12' 3-3/8"	7' 3-1/8"	8' 6-1/8"
AT 217-2J11	467	9,840	16,440	3,200	(2) 15	114,600	12' 3-3/8"	7' 3-1/8"	8' 6-1/8"
AT 217-3G11	347	10,200	16,800	3,380	(2) 5	79,600	13' 3-3/8"	8' 3-1/8"	9' 6-1/8"
AT 217-3H11	409	10,280	16,880	3,420	(2) 7.5	90,500	13' 3-3/8"	8' 3-1/8"	9' 6-1/8"
AT 217-3I11	447	10,340	16,940	3,450	(2) 10	99,100	13' 3-3/8"	8' 3-1/8"	9' 6-1/8"
AT 217-3J11	516	10,480	17,080	3,520	(2) 15	112,500	13' 3-3/8"	8' 3-1/8"	9' 6-1/8"
AT 217-3K11	576	10,580	17,180	3,570	(2) 20	123,000	13' 3-3/8"	8' 3-1/8"	9' 6-1/8"
AT 217-4G11	385	10,900	17,500	3,730	(2) 5	78,200	14' 3-3/8"	9' 3-1/8"	10' 6-1/8"
AT 217-4H11	444	10,980	17,580	3,770	(2) 7.5	88,900	14' 3-3/8"	9' 3-1/8"	10' 6-1/8"
AT 217-4I11	480	11,040	17,640	3,800	(2) 10	97,400	14' 3-3/8"	9' 3-1/8"	10' 6-1/8"
AT 217-4J11	545	11,180	17,780	3,870	(2) 15	110,600	14' 3-3/8"	9' 3-1/8"	10' 6-1/8"
AT 217-4K11	602	11,280	17,880	3,920	(2) 20	120,900	14' 3-3/8"	9' 3-1/8"	10' 6-1/8"
AT 217-4L11	634	11,340	17,940	3,950	(2) 25	129,700	14' 3-3/8"	9' 3-1/8"	10' 6-1/8"
SLSF Addition		300	300	150			1' 9"	1' 9"	

NOTE: (1) An adequately sized bleed line must be installed in the cooling tower system to prevent build-up of impurities in the recirculated water.
(2) Do not use catalog drawings for certified prints. Dimensions and weights are subject to change.
(3) Adequate spacing must be allowed for access to the cooling tower. Refer to EVAPCO's Equipment Layout Manual.
(4) Nominal Tonnage is based on 3 gpm per ton at 95 degree entering water temperature, 85 degree leaving water temperature, and 78 degree wet-bulb temperature.

✧ Outlet connection extends beyond bottom flange.
† Height includes fan guard which ships factory mounted.
✦ Heaviest section is upper section.

Models: AT/UT/USS 19-2H12 to 19-4M12

One-Cell Cooling Towers

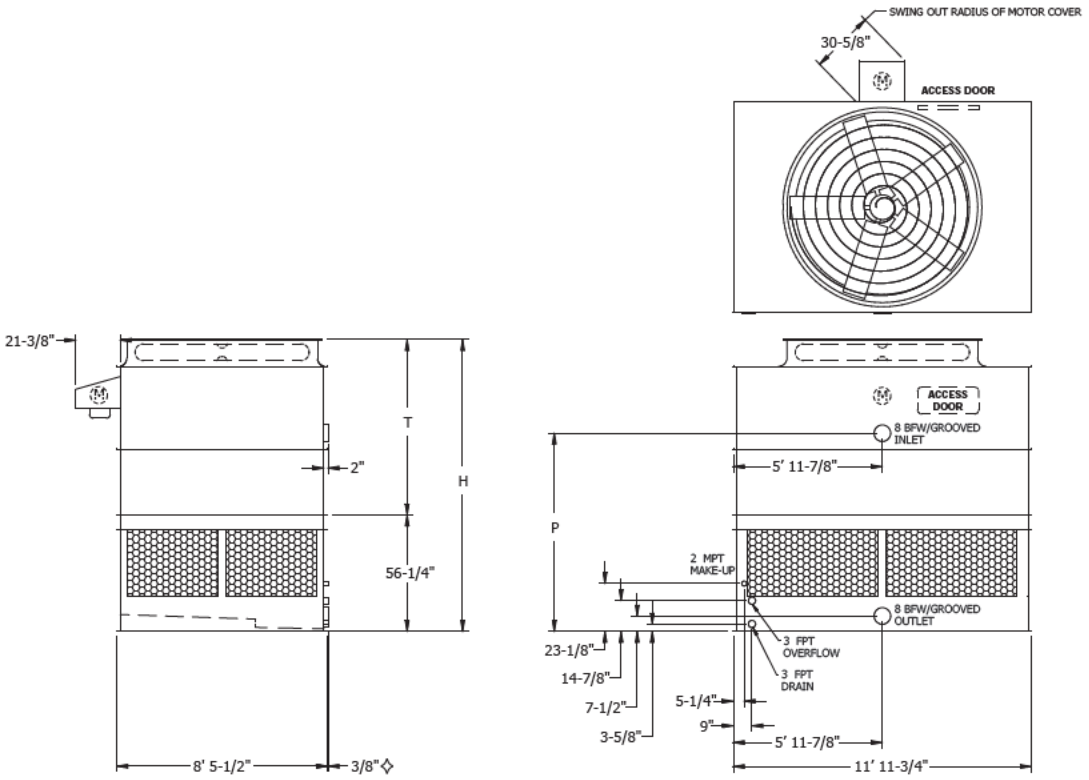

Model No.	Nominal Tonnage	WEIGHTS (LBS)			Fan Motor (HP)	Air Flow (CFM)	DIMENSIONS		
		Shipping	Operating	Heaviest Section✦			H†	T†	P
AT 19-2H12	203	5,190	9,050	3,430	7.5	50,600	11' 8-3/4"	7' 1/2"	7' 11-1/2"
AT 19-2I12	230	5,220	9,080	3,460	10	55,400	11' 8-3/4"	7' 1/2"	7' 11-1/2"
AT 19-2J12	257	5,300	9,160	3,540	15	63,100	11' 8-3/4"	7' 1/2"	7' 11-1/2"
AT 19-2K12	283	5,340	9,200	3,580	20	69,100	11' 8-3/4"	7' 1/2"	7' 11-1/2"
AT 19-3H12	229	5,550	9,410	3,790	7.5	49,800	12' 8-3/4"	8' 1/2"	8' 11-1/2"
AT 19-3I12	256	5,580	9,440	3,820	10	54,500	12' 8-3/4"	8' 1/2"	8' 11-1/2"
AT 19-3J12	289	5,660	9,520	3,900	15	61,900	12' 8-3/4"	8' 1/2"	8' 11-1/2"
AT 19-3K12	319	5,700	9,560	3,940	20	67,800	12' 8-3/4"	8' 1/2"	8' 11-1/2"
AT 19-3L12	340	5,720	9,580	3,960	25	72,800	12' 8-3/4"	8' 1/2"	8' 11-1/2"
AT 19-4H12	243	5,940	9,800	4,180	7.5	49,000	13' 8-3/4"	9' 1/2"	9' 11-1/2"
AT 19-4I12	268	5,970	9,830	4,210	10	53,600	13' 8-3/4"	9' 1/2"	9' 11-1/2"
AT 19-4J12	299	6,050	9,910	4,290	15	61,000	13' 8-3/4"	9' 1/2"	9' 11-1/2"
AT 19-4K12	330	6,090	9,950	4,330	20	66,700	13' 8-3/4"	9' 1/2"	9' 11-1/2"
AT 19-4L12	352	6,110	9,970	4,350	25	71,500	13' 8 3/4"	9' 1/2"	9' 11-1/2"
AT 19-4M12	363	6,130	9,990	4,370	30	75,800	13' 8 3/4"	9' 1/2"	9' 11-1/2"
SLSF Addition		150	150	150			1' 9"	1' 9"	

NOTE: (1) An adequately sized bleed line must be installed in the cooling tower system to prevent build-up of impurities in the recirculated water.
(2) Do not use catalog drawings for certified prints. Dimensions and weights are subject to change.
(3) Adequate spacing must be allowed for access to the cooling tower. Refer to EVAPCO's Equipment Layout Manual.
(4) Nominal Tonnage is based on 3 gpm per ton at 95 degree entering water temperature, 85 degree leaving water temperature, and 78 degree wet-bulb temperature.

◇ Outlet connection extends beyond bottom flange.
✦ Heaviest section is upper section.
† Height includes fan guard which ships factory mounted.

Models: AT/UT/USS 217-2H12 to 217-4M12

Two-Cell Cooling Towers

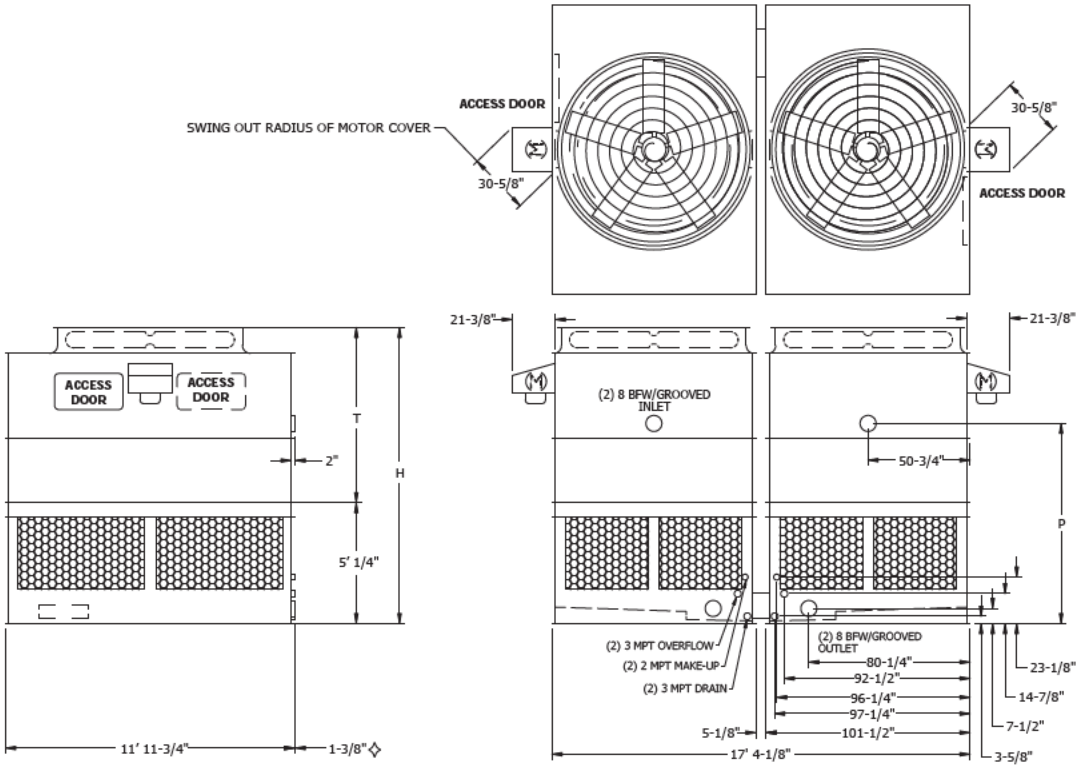

Model No.	Nominal Tonnage	WEIGHTS (LBS)			Fan Motor (HP)	Air Flow (CFM)	DIMENSIONS		
		Shipping	Operating	Heaviest Section✦			H†	T†	P
AT 217-2H12	394	10,560	18,280	3,430	(2) 7.5	99,600	12' 3-3/8"	7' 3-1/8"	8' 6-1/8"
AT 217-2I12	447	10,620	18,340	3,460	(2) 10	109,100	12' 3-3/8"	7' 3-1/8"	8' 6-1/8"
AT 217-2J12	499	10,780	18,500	3,540	(2) 15	124,300	12' 3-3/8"	7' 3-1/8"	8' 6-1/8"
AT 217-2K12	550	10,860	18,580	3,580	(2) 20	136,200	12' 3-3/8"	7' 3-1/8"	8' 6-1/8"
AT 217-3H12	446	11,280	19,000	3,790	(2) 7.5	98,100	13' 3-3/8"	8' 3-1/8"	9' 6-1/8"
AT 217-3I12	499	11,340	19,060	3,820	(2) 10	107,300	13' 3-3/8"	8' 3-1/8"	9' 6-1/8"
AT 217-3J12	564	11,500	19,220	3,900	(2) 15	122,000	13' 3-3/8"	8' 3-1/8"	9' 6-1/8"
AT 217-3K12	622	11,580	19,300	3,940	(2) 20	133,500	13' 3-3/8"	8' 3-1/8"	9' 6-1/8"
AT 217-3L12	665	11,620	19,340	3,960	(2) 25	143,200	13' 3-3/8"	8' 3-1/8"	9' 6-1/8"
AT 217-4H12	474	12,060	19,780	4,180	(2) 7.5	96,500	14' 3-3/8"	9' 3-1/8"	10' 6-1/8"
AT 217-4I12	524	12,120	19,840	4,210	(2) 10	105,600	14' 3-3/8"	9' 3-1/8"	10' 6-1/8"
AT 217-4J12	585	12,280	20,000	4,290	(2) 15	120,100	14' 3-3/8"	9' 3-1/8"	10' 6-1/8"
AT 217-4K12	645	12,360	20,080	4,330	(2) 20	131,400	14' 3-3/8"	9' 3-1/8"	10' 6-1/8"
AT 217-4L12	688	12,400	20,120	4,350	(2) 25	140,800	14' 3-3/8"	9' 3-1/8"	10' 6-1/8"
AT 217-4M12	709	12,440	20,160	4,370	(2) 30	149,300	14' 3-3/8"	9' 3-1/8"	10' 6-1/8"
SLSF Addition		300	300	150			1' 9"	1' 9"	

NOTE: (1) An adequately sized bleed line must be installed in the cooling tower system to prevent build-up of impurities in the recirculated water.
(2) Do not use catalog drawings for certified prints. Dimensions and weights are subject to change.
(3) Adequate spacing must be allowed for access to the cooling tower. Refer to EVAPCO's Equipment Layout Manual.
(4) Nominal Tonnage is based on 3 gpm per ton at 95 degree entering water temperature, 85 degree leaving water temperature, and 78 degree wet-bulb temperature.

✧ Outlet connection extends beyond bottom flange.
† Height includes fan guard which ships factory mounted.
✦ Heaviest section is upper section.

Models: AT/UT/USS 29-2H24 to 29-4M24

Two-Cell Cooling Towers

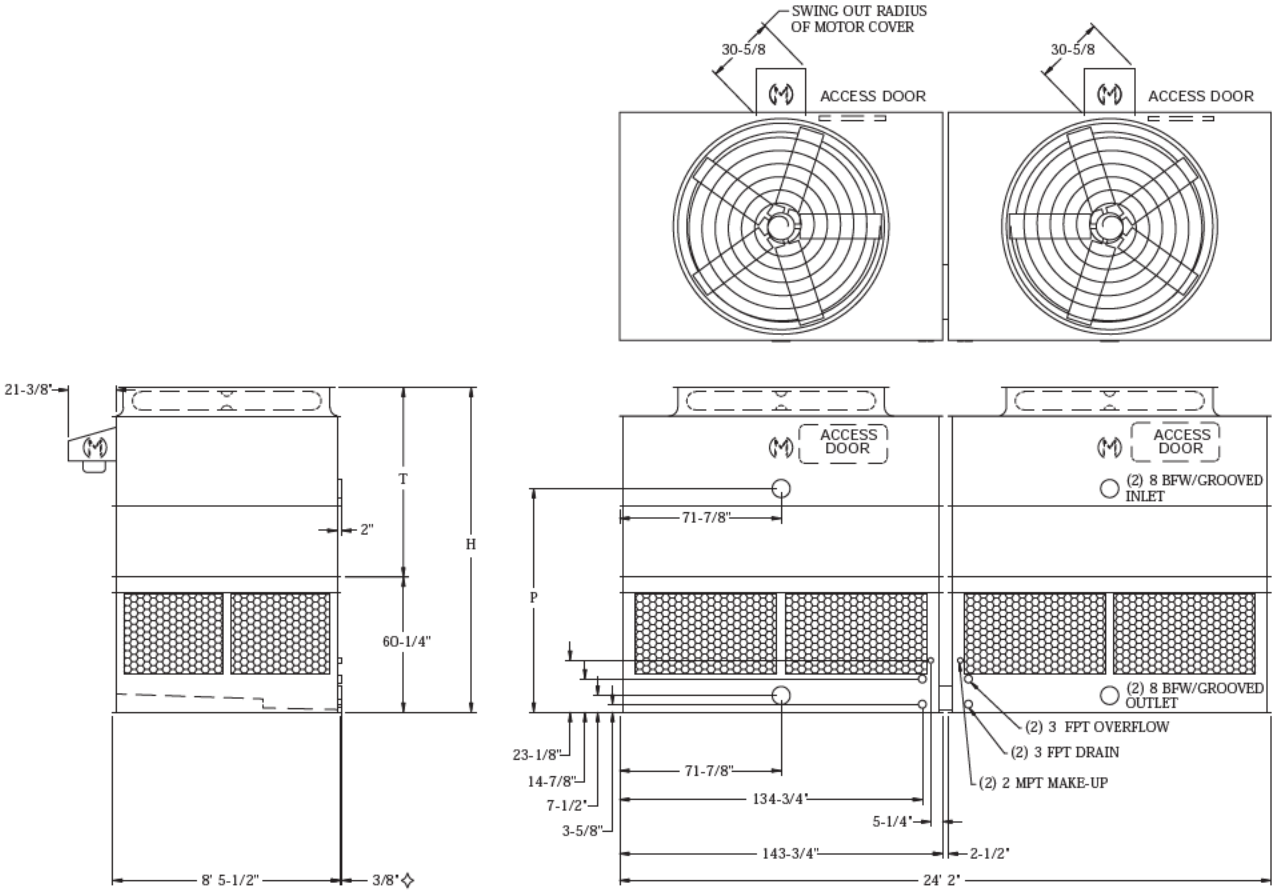

Model No.	Nominal Tonnage	WEIGHTS (LBS)			Fan Motor (HP)	Air Flow (CFM)	DIMENSIONS		
		Shipping	Operating	Heaviest Section✦			H†	T†	P
AT 29-2H24	400	10,580	18,300	3,430	(2) 7.5	100,100	12' 3/4"	7' 1/2"	8' 3-1/2"
AT 29-2I24	454	10,640	18,360	3,460	(2) 10	109,700	12' 3/4"	7' 1/2"	8' 3-1/2"
AT 29-2J24	507	10,800	18,520	3,540	(2) 15	124,900	12' 3/4"	7' 1/2"	8' 3-1/2"
AT 29-2K24	559	10,880	18,600	3,580	(2) 20	136,800	12' 3/4"	7' 1/2"	8' 3-1/2"
AT 29-3H24	452	11,300	19,020	3,790	(2) 7.5	98,600	13' 3/4"	8' 1/2"	9' 3-1/2"
AT 29-3I24	506	11,360	19,080	3,820	(2) 10	107,900	13' 3/4"	8' 1/2"	9' 3-1/2"
AT 29-3J24	571	11,520	19,240	3,900	(2) 15	122,600	13' 3/4"	8' 1/2"	9' 3-1/2"
AT 29-3K24	630	11,600	19,320	3,940	(2) 20	134,100	13' 3/4"	8' 1/2"	9' 3-1/2"
AT 29-3L24	674	11,640	19,360	3,960	(2) 25	144,000	13' 3/4"	8' 1/2"	9' 3-1/2"
AT 29-4H24	481	12,080	19,800	4,180	(2) 7.5	96,900	14' 3/4"	9' 1/2"	10' 3-1/2"
AT 29-4I24	531	12,140	19,860	4,210	(2) 10	106,200	14' 3/4"	9' 1/2"	10' 3-1/2"
AT 29-4J24	593	12,300	20,020	4,290	(2) 15	120,700	14' 3/4"	9' 1/2"	10' 3-1/2"
AT 29-4K24	653	12,380	20,100	4,330	(2) 20	132,000	14' 3/4"	9' 1/2"	10' 3-1/2"
AT 29-4L24	696	12,420	20,140	4,350	(2) 25	141,500	14' 3/4"	9' 1/2"	10' 3-1/2"
AT 29-4M24	718	12,460	20,180	4,370	(2) 30	150,000	14' 3/4"	9' 1/2"	10' 3-1/2"
SLSF Addition		300	300	150			1' 9"	1' 9"	

NOTE: (1) An adequately sized bleed line must be installed in the cooling tower system to prevent build-up of impurities in the recirculated water.
(2) Do not use catalog drawings for certified prints. Dimensions and weights are subject to change.
(3) Adequate spacing must be allowed for access to the cooling tower. Refer to EVAPCO's Equipment Layout Manual.
(4) Nominal Tonnage is based on 3 gpm per ton at 95 degree entering water temperature, 85 degree leaving water temperature, and 78 degree wet-bulb temperature.

✧ Outlet connection extends beyond bottom flange.
† Height includes fan guard which ships factory mounted.
✦ Heaviest section is upper section.

Models: AT/UT/USS 39-2H36 to 39-4M36

Three-Cell Cooling Towers

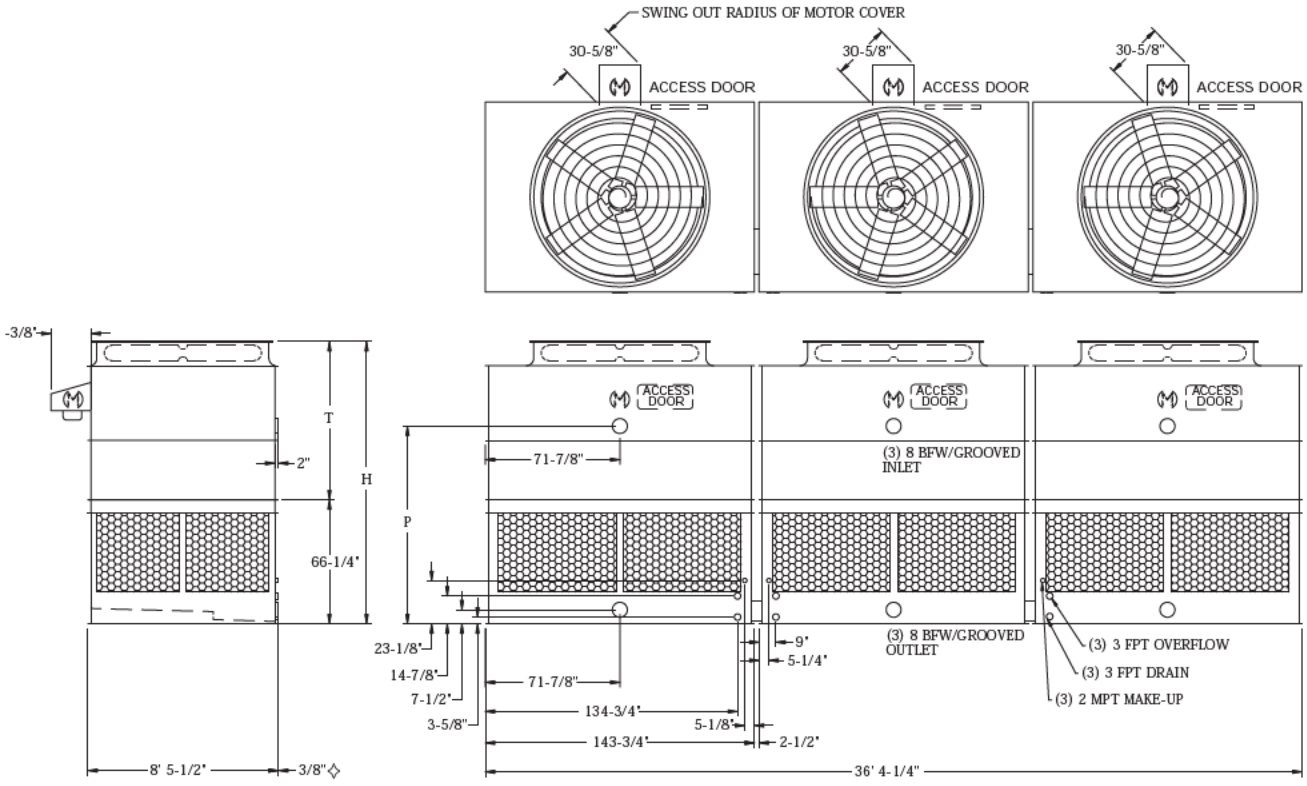

Model No.	Nominal Tonnage	WEIGHTS (LBS)			Fan Motor (HP)	Air Flow (CFM)	DIMENSIONS		
		Shipping	Operating	Heaviest Section✦			H†	T†	P
AT 39-2H36	605	15,990	27,570	3,430	(3) 7.5	150,900	12' 6-3/4"	7' 1/2"	8' 9-1/2"
AT 39-2I36	686	16,080	27,660	3,460	(3) 10	165,200	12' 6-3/4"	7' 1/2"	8' 9-1/2"
AT 39-2J36	765	16,320	27,900	3,540	(3) 15	188,200	12' 6-3/4"	7' 1/2"	8' 9-1/2"
AT 39-2K36	843	16,440	28,020	3,580	(3) 20	206,200	12' 6-3/4"	7' 1/2"	8' 9-1/2"
AT 39-3H36	682	17,070	28,650	3,790	(3) 7.5	148,600	13' 6-3/4"	8' 1/2"	9' 9-1/2"
AT 39-3I36	763	17,160	28,740	3,820	(3) 10	162,500	13' 6-3/4"	8' 1/2"	9' 9-1/2"
AT 39-3J36	862	17,400	28,980	3,900	(3) 15	184,700	13' 6-3/4"	8' 1/2"	9' 9-1/2"
AT 39-3K36	951	17,520	29,100	3,940	(3) 20	202,100	13' 6-3/4"	8' 1/2"	9' 9-1/2"
AT 39-3L36	1,016	17,580	29,160	3,960	(3) 25	217,000	13' 6-3/4"	8' 1/2"	9' 9-1/2"
AT 39-4H36	725	18,240	29,820	4,180	(3) 7.5	146,100	14' 6-3/4"	9' 1/2"	10' 9-1/2"
AT 39-4I36	800	18,330	29,910	4,210	(3) 10	159,900	14' 6-3/4"	9' 1/2"	10' 9-1/2"
AT 39-4J36	893	18,570	30,150	4,290	(3) 15	181,900	14' 6-3/4"	9' 1/2"	10' 9-1/2"
AT 39-4K36	984	18,690	30,270	4,330	(3) 20	198,900	14' 6-3/4"	9' 1/2"	10' 9-1/2"
AT 39-4L36	1,050	18,750	30,330	4,350	(3) 25	213,200	14' 6-3/4"	9' 1/2"	10' 9-1/2"
AT 39-4M36	1,082	18,810	30,390	4,370	(3) 30	226,000	14' 6-3/4"	9' 1/2"	10' 9-1/2"
SLSF Addition		450	450	150			1' 9"	1' 9"	

NOTE: (1) An adequately sized bleed line must be installed in the cooling tower system to prevent build-up of impurities in the recirculated water.
(2) Do not use catalog drawings for certified prints. Dimensions and weights are subject to change.
(3) Adequate spacing must be allowed for access to the cooling tower. Refer to EVAPCO's Equipment Layout Manual.
(4) Nominal Tonnage is based on 3 gpm per ton at 95 degree entering water temperature, 85 degree leaving water temperature, and 78 degree wet-bulb temperature.

◇ Outlet connection extends beyond bottom flange.
† Height includes fan guard which ships factory mounted.
✦ Heaviest section is upper section.

Models: AT/UT/USS 19-2H14 to 19-4M14

One-Cell Cooling Towers

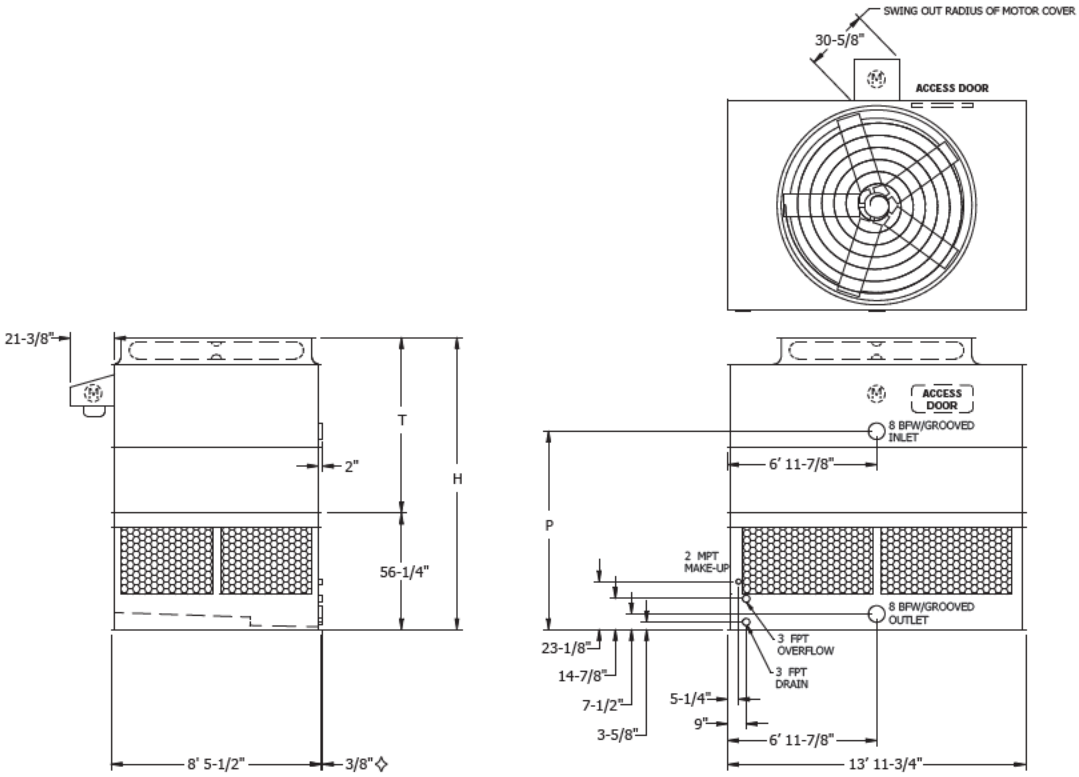

Model No.	Nominal Tonnage	WEIGHTS (LBS)			Fan Motor (HP)	Air Flow (CFM)	DIMENSIONS		
		Shipping	Operating	Heaviest Section✦			H†	T†	P
AT 19-2H14	221	5,730	10,240	3,680	7.5	55,900	11' 8-3/4"	7' 1/2"	7' 11-1/2"
AT 19-2I14	251	5,760	10,270	3,710	10	61,300	11' 8-3/4"	7' 1/2"	7' 11-1/2"
AT 19-2J14	280	5,840	10,350	3,790	15	69,800	11' 8 3/4"	7' 1/2"	7' 11-1/2"
AT 19-2K14	309	5,880	10,390	3,830	20	76,500	11' 8 3/4"	7' 1/2"	7' 11-1/2"
AT 19-2L14	337	5,900	10,410	3,850	25	82,000	11' 8 3/4"	7' 1/2"	7' 11-1/2"
AT 19-3H14	249	6,140	10,650	4,090	7.5	55,100	12' 8-3/4"	8' 1/2"	8' 11-1/2"
AT 19-3I14	280	6,170	10,680	4,120	10	60,300	12' 8-3/4"	8' 1/2"	8' 11-1/2"
AT 19-3J14	315	6,250	10,760	4,200	15	68,600	12' 8-3/4"	8' 1/2"	8' 11-1/2"
AT 19-3K14	347	6,290	10,800	4,240	20	75,000	12' 8-3/4"	8' 1/2"	8' 11-1/2"
AT 19-3L14	377	6,310	10,820	4,260	25	80,400	12' 8-3/4"	8' 1/2"	8' 11-1/2"
AT 19-3M14	399	6,330	10,840	4,280	30	85,200	12' 8-3/4"	8' 1/2"	8' 11-1/2"
AT 19-4H14	266	6,590	11,100	4,540	7.5	54,200	13' 8-3/4"	9' 1/2"	9' 11-1/2"
AT 19-4I14	295	6,620	11,130	4,570	10	59,300	13' 8-3/4"	9' 1/2"	9' 11-1/2"
AT 19-4J14	329	6,700	11,210	4,650	15	67,500	13' 8-3/4"	9' 1/2"	9' 11-1/2"
AT 19-4K14	361	6,740	11,250	4,690	20	73,800	13' 8 3/4"	9' 1/2"	9' 11-1/2"
AT 19-4L14	391	6,760	11,270	4,710	25	79,100	13' 8 3/4"	9' 1/2"	9' 11-1/2"
AT 19-4M14	413	6,780	11,290	4,730	30	83,700	13' 8 3/4"	9' 1/2"	9' 11-1/2"
SLSF Addition		150	150	150			1' 9"	1' 9"	

NOTE: (1) An adequately sized bleed line must be installed in the cooling tower system to prevent build-up of impurities in the recirculated water.
(2) Do not use catalog drawings for certified prints. Dimensions and weights are subject to change.
(3) Adequate spacing must be allowed for access to the cooling tower. Refer to EVAPCO's Equipment Layout Manual.
(4) Nominal Tonnage is based on 3 gpm per ton at 95 degree entering water temperature, 85 degree leaving water temperature, and 78 degree wet-bulb temperature.

✧ Outlet connection extends beyond bottom flange.
✦ Heaviest section is upper section.
† Height includes fan guard which ships factory mounted.

Models: AT/UT/USS 217-2H14 to 217-4M14

Two-Cell Cooling Towers

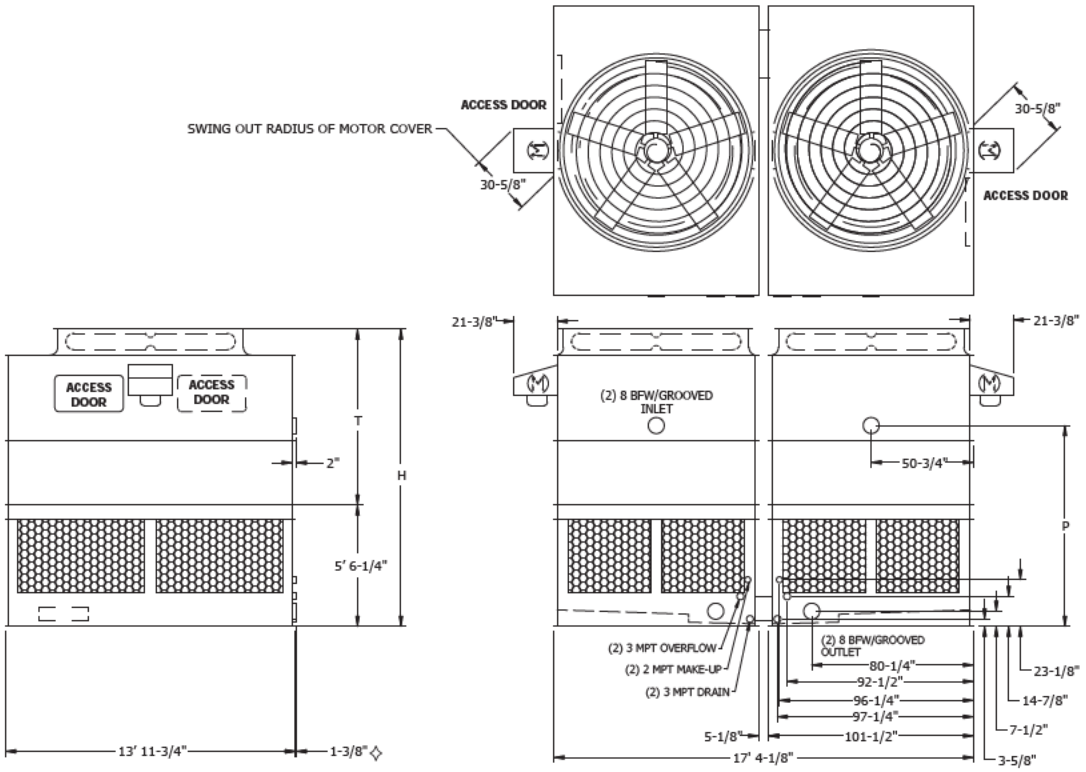

Model No.	Nominal Tonnage	WEIGHTS (LBS)			Fan Motor (HP)	Air Flow (CFM)	DIMENSIONS		
		Shipping	Operating	Heaviest Section✦			H†	T†	P
AT 217-2H14	435	11,640	20,660	3,680	(2) 7.5	112,300	12' 9-3/8"	7' 3-1/8"	9' 1/8 "
AT 217-2I14	494	11,700	20,720	3,710	(2) 10	123,000	12' 9-3/8"	7' 3-1/8"	9' 1/8 "
AT 217-2J14	551	11,860	20,880	3,790	(2) 15	140,200	12' 9-3/8"	7' 3-1/8"	9' 1/8 "
AT 217-2K14	608	11,940	20,960	3,830	(2) 20	153,600	12' 9-3/8"	7' 3-1/8"	9' 1/8 "
AT 217-2L14	664	11,980	21,000	3,850	(2) 25	164,700	12' 9-3/8"	7' 3-1/8"	9' 1/8 "
AT 217-3H14	490	12,460	21,480	4,090	(2) 7.5	110,600	13' 9-3/8"	8' 3-1/8"	10' 1/8 "
AT 217-3I14	551	12,520	21,540	4,120	(2) 10	121,100	13' 9-3/8"	8' 3-1/8"	10' 1/8 "
AT 217-3J14	621	12,680	21,700	4,200	(2) 15	137,700	13' 9-3/8"	8' 3-1/8"	10' 1/8 "
AT 217-3K14	685	12,760	21,780	4,240	(2) 20	150,600	13' 9-3/8"	8' 3-1/8"	10' 1/8 "
AT 217-3L14	744	12,800	21,820	4,260	(2) 25	161,500	13' 9-3/8"	8' 3-1/8"	10' 1/8 "
AT 217-3M14	787	12,840	21,860	4,280	(2) 30	171,100	13' 9-3/8"	8' 3-1/8"	10' 1/8 "
AT 217-4H14	525	13,360	22,380	4,540	(2) 7.5	108,800	14' 9-3/8"	9' 3-1/8"	11' 1/8 "
AT 217-4I14	581	13,420	22,440	4,570	(2) 10	119,100	14' 9-3/8"	9' 3-1/8"	11' 1/8 "
AT 217-4J14	649	13,580	22,600	4,650	(2) 15	135,500	14' 9-3/8"	9' 3-1/8"	11' 1/8 "
AT 217-4K14	714	13,660	22,680	4,690	(2) 20	148,300	14' 9-3/8"	9' 3-1/8"	11' 1/8 "
AT 217-4L14	773	13,700	22,720	4,710	(2) 25	158,900	14' 9-3/8"	9' 3-1/8"	11' 1/8 "
AT 217-4M14	815	13,740	22,760	4,730	(2) 30	168,200	14' 9-3/8"	9' 3-1/8"	11' 1/8 "
SLSF Addition		300	300	150			1' 9"	1' 9"	

NOTE: (1) An adequately sized bleed line must be installed in the cooling tower system to prevent build-up of impurities in the recirculated water.
(2) Do not use catalog drawings for certified prints. Dimensions and weights are subject to change.
(3) Adequate spacing must be allowed for access to the cooling tower. Refer to EVAPCO's Equipment Layout Manual.
(4) Nominal Tonnage is based on 3 gpm per ton at 95 degree entering water temperature, 85 degree leaving water temperature, and 78 degree wet-bulb temperature.

✧ Outlet connection extends beyond bottom flange.
† Height includes fan guard which ships factory mounted.
✦ Heaviest section is upper section.

Models: AT/UT/USS 29-2H28 to 29-4M28

Two-Cell Cooling Towers

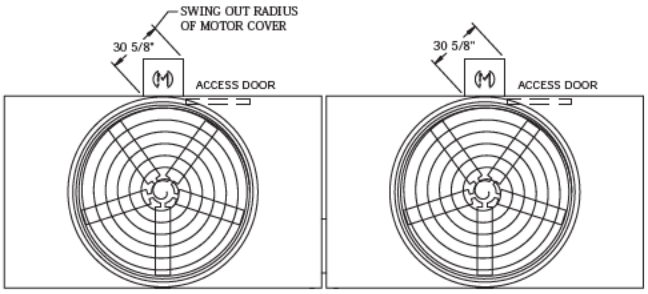

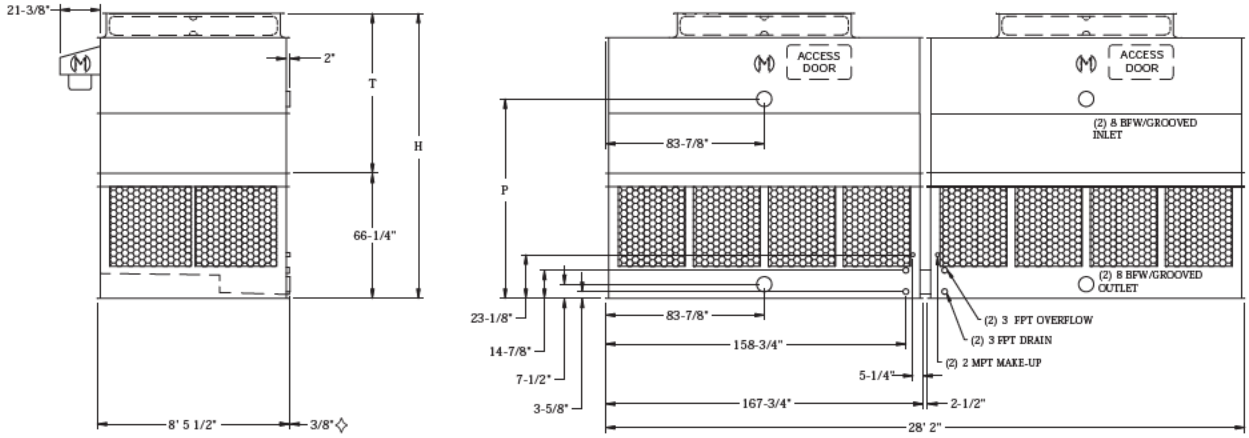

Model No.	Nominal Tonnage	WEIGHTS (LBS)			Fan Motor (HP)	Air Flow (CFM)	DIMENSIONS		
		Shipping	Operating	Heaviest Section✦			H†	T†	P
AT 29-2H28	446	11,640	20,660	3,680	(2)7.5	112,300	12' 6-3/4"	7' 1/2"	8' 9-1/2"
AT 29-2I28	506	11,700	20,720	3,710	(2)10	123,000	12' 6-3/4"	7' 1/2"	8' 9-1/2"
AT 29-2J28	563	11,860	20,880	3,790	(2)15	140,200	12' 6-3/4"	7' 1/2"	8' 9-1/2"
AT 29-2K28	622	11,940	20,960	3,830	(2)20	153,600	12' 6-3/4"	7' 1/2"	8' 9-1/2"
AT 29-2L28	678	11,980	21,000	3,850	(2)25	164,700	12' 6-3/4"	7' 1/2"	8' 9-1/2"
AT 29-3H28	502	12,460	21,480	4,090	(2)7.5	110,700	13' 6-3/4"	8' 1/2"	9' 9-1/2"
AT 29-3I28	563	12,520	21,540	4,120	(2)10	121,100	13' 6-3/4"	8' 1/2"	9' 9-1/2"
AT 29-3J28	633	12,680	21,700	4,200	(2)15	137,700	13' 6-3/4"	8' 1/2"	9' 9-1/2"
AT 29-3K28	698	12,760	21,780	4,240	(2)20	150,600	13' 6-3/4"	8' 1/2"	9' 9-1/2"
AT 29-3L28	757	12,800	21,820	4,260	(2)25	161,500	13' 6-3/4"	8' 1/2"	9' 9-1/2"
AT 29-3M28	802	12,840	21,860	4,280	(2)30	171,200	13' 6-3/4"	8' 1/2"	9' 9-1/2"
AT 29-4H28	535	13,360	22,380	4,540	(2)7.5	108,800	14' 6-3/4"	9' 1/2"	10' 9-1/2"
AT 29-4I28	592	13,420	22,440	4,570	(2)10	119,200	14' 6-3/4"	9' 1/2"	10' 9-1/2"
AT 29-4J28	661	13,580	22,600	4,650	(2)15	135,600	14' 6-3/4"	9' 1/2"	10' 9-1/2"
AT 29-4K28	726	13,660	22,680	4,690	(2)20	148,300	14' 6-3/4"	9' 1/2"	10' 9-1/2"
AT 29-4L28	787	13,700	22,720	4,710	(2)25	158,900	14' 6-3/4"	9' 1/2"	10' 9-1/2"
AT 29-4M28	830	13,740	22,760	4,730	(2)30	168,100	14' 6-3/4"	9' 1/2"	10' 9-1/2"
SLSF Addition		300	300	150			1' 9"	1' 9"	

NOTE: (1) An adequately sized bleed line must be installed in the cooling tower system to prevent build-up of impurities in the recirculated water.
(2) Do not use catalog drawings for certified prints. Dimensions and weights are subject to change.
(3) Adequate spacing must be allowed for access to the cooling tower. Refer to EVAPCO's Equipment Layout Manual.
(4) Nominal Tonnage is based on 3 gpm per ton at 95 degree entering water temperature, 85 degree leaving water temperature, and 78 degree wet-bulb temperature.

◇ Outlet connection extends beyond bottom flange.
† Height includes fan guard which ships factory mounted.
✦ Heaviest section is upper section.

Models: AT/UT/USS 39-2H42 to 39-4M42

Three-Cell Cooling Towers

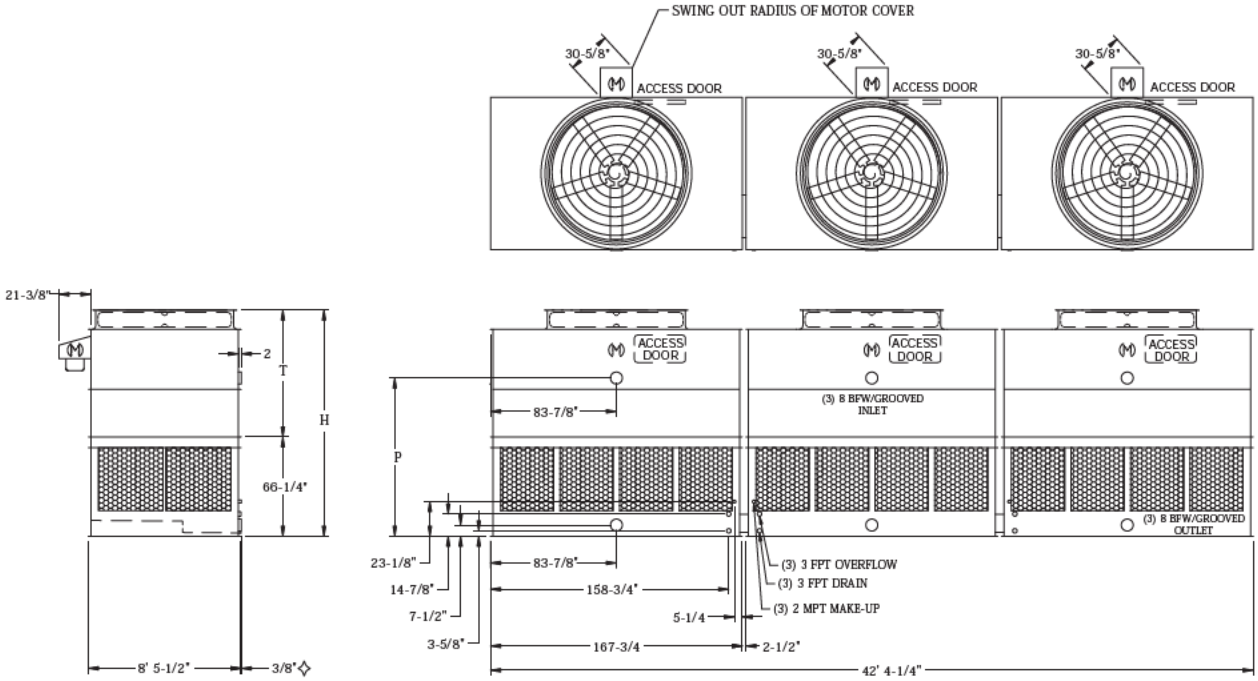

Model No.	Nominal Tonnage	WEIGHTS (LBS)			Fan Motor (HP)	Air Flow (CFM)	DIMENSIONS		
		Shipping	Operating	Heaviest Section✦			H†	T†	P
AT 39-2H42	664	17,430	30,960	3,680	(3) 7.5	167,700	12' 6-3/4"	7' 6-3/4"	8' 9-1/2"
AT 39-2I42	754	17,520	31,050	3,710	(3) 10	183,700	12' 6-3/4"	7' 6-3/4"	8' 9-1/2"
AT 39-2J42	840	17,760	31,290	3,790	(3) 15	209,300	12' 6-3/4"	7' 6-3/4"	8' 9-1/2"
AT 39-2K42	927	17,880	31,410	3,830	(3) 20	229,300	12' 6-3/4"	7' 6-3/4"	8' 9-1/2"
AT 39-2L42	1,011	17,940	31,470	3,850	(3) 25	246,000	12' 6-3/4"	7' 6-3/4"	8' 9-1/2"
AT 39-3H42	748	18,660	32,190	4,090	(3) 7.5	165,200	13' 6-3/4"	8' 6-3/4"	9' 9-1/2"
AT 39-3I42	839	18,750	32,280	4,120	(3) 10	180,800	13' 6-3/4"	8' 6-3/4"	9' 9-1/2"
AT 39-3J42	945	18,990	32,520	4,200	(3) 15	205,600	13' 6-3/4"	8' 6-3/4"	9' 9-1/2"
AT 39-3K42	1,042	19,110	32,640	4,240	(3) 20	224,900	13' 6-3/4"	8' 6-3/4"	9' 9-1/2"
AT 39-3L42	1,130	19,170	32,700	4,260	(3) 25	241,200	13' 6-3/4"	8' 6-3/4"	9' 9-1/2"
AT 39-3M42	1,197	19,230	32,760	4,280	(3) 30	255,600	13' 6-3/4"	8' 6-3/4"	9' 9-1/2"
AT 39-4H42	799	20,010	33,540	4,540	(3) 7.5	162,400	14' 6-3/4"	9' 6-3/4"	10' 9-1/2"
AT 39-4I42	884	20,100	33,630	4,570	(3) 10	177,900	14' 6-3/4"	9' 6-3/4"	10' 9-1/2"
AT 39-4J42	986	20,340	33,870	4,650	(3) 15	202,400	14' 6-3/4"	9' 6-3/4"	10' 9-1/2"
AT 39-4K42	1,084	20,460	33,990	4,690	(3) 20	221,400	14' 6-3/4"	9' 6-3/4"	10' 9-1/2"
AT 39-4L42	1,174	20,520	34,050	4,710	(3) 25	237,200	14' 6-3/4"	9' 6-3/4"	10' 9-1/2"
AT 39-4M42	1,239	20,580	34,110	4,730	(3) 30	251,100	14' 6-3/4"	9' 6-3/4"	10' 9-1/2"
SLSF Addition		450	450	150			1' 9"	1' 9"	

NOTE: (1) An adequately sized bleed line must be installed in the cooling tower system to prevent build-up of impurities in the recirculated water.
(2) Do not use catalog drawings for certified prints. Dimensions and weights are subject to change.
(3) Adequate spacing must be allowed for access to the cooling tower. Refer to EVAPCO's Equipment Layout Manual.
(4) Nominal Tonnage is based on 3 gpm per ton at 95 degree entering water temperature, 85 degree leaving water temperature, and 78 degree wet-bulb temperature.

◇ Outlet connection extends beyond bottom flange.
† Height includes fan guard which ships factory mounted.
✦ Heaviest section is upper section.

Models: AT/UT/USS 110-2I12 to 110-4N12

One-Cell Cooling Towers

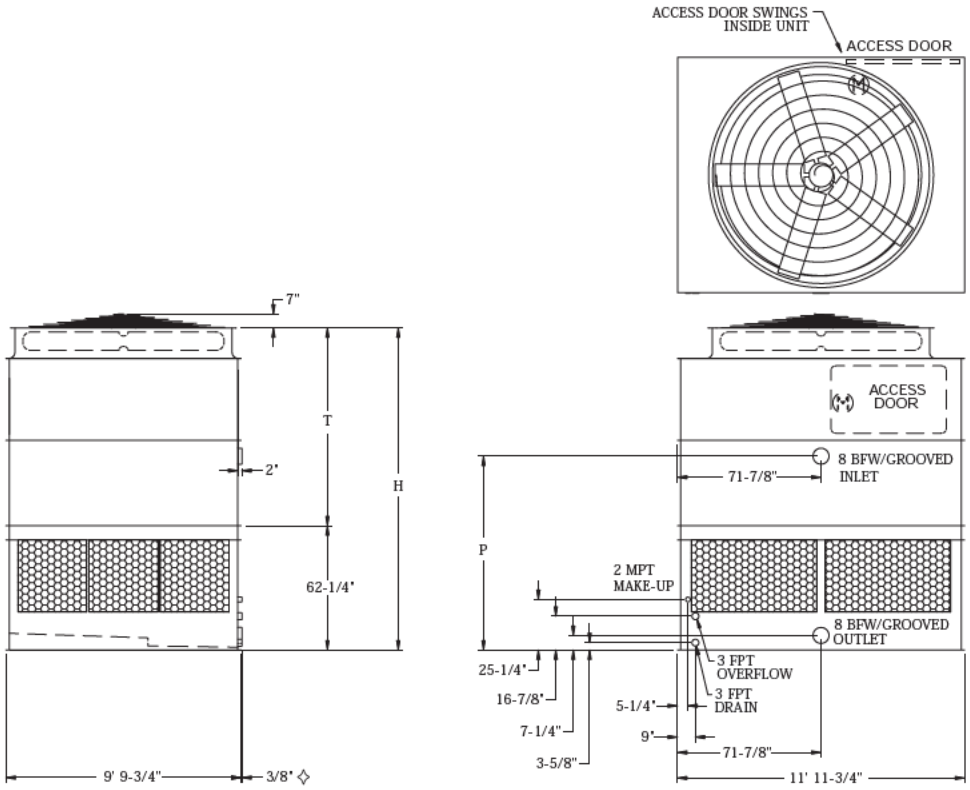

Model No.	Nominal Tonnage	WEIGHTS (LBS)			Fan Motor (HP)	Air Flow (CFM)	DIMENSIONS		
		Shipping	Operating	Heaviest Section✦			H†	T†	P
AT 110-2I12	227	6,620	11,580	4,200	10	64,700	13' 5-1/4"	8' 3"	8' 1"
AT 110-2J12	276	6,690	11,650	4,270	15	73,500	13' 5-1/4"	8' 3"	8' 1"
AT 110-2K12	305	6,740	11,700	4,320	20	80,600	13' 5-1/4"	8' 3"	8' 1"
AT 110-2L12	326	6,790	11,750	4,370	25	86,500	13' 5-1/4"	8' 3"	8' 1"
AT 110-2M12	342	6,890	11,850	4,470	30	91,700	13' 5-1/4"	8' 3"	8' 1"
AT 110-3I12	264	7,100	12,060	4,680	10	63,700	14' 5-1/4"	9' 3"	9' 1"
AT 110-3J12	309	7,170	12,130	4,750	15	72,300	14' 5-1/4"	9' 3"	9' 1"
AT 110-3K12	338	7,220	12,180	4,800	20	79,100	14' 5-1/4"	9' 3"	9' 1"
AT 110-3L12	361	7,270	12,230	4,850	25	84,900	14' 5-1/4"	9' 3"	9' 1"
AT 110-3M12	380	7,370	12,330	4,950	30	89,900	14' 5-1/4"	9' 3"	9' 1"
AT 110-4I12	277	7,520	12,480	5,100	10	62,700	15' 5-1/4"	10' 3"	10' 1"
AT 110-4J12	322	7,590	12,550	5,170	15	71,200	15' 5-1/4"	10' 3"	10' 1"
AT 110-4K12	350	7,640	12,600	5,220	20	77,900	15' 5-1/4"	10' 3"	10' 1"
AT 110-4L12	373	7,690	12,650	5,270	25	83,600	15' 5-1/4"	10' 3"	10' 1"
AT 110-4M12	393	7,790	12,750	5,370	30	88,500	15' 5-1/4"	10' 3"	10' 1"
AT 110-4N12	410	8,040	13,000	5,620	35	92,800	15' 5-1/4"	10' 3"	10' 1"
SLSF Addition		700	700	700			1' 9-1/2"	1' 9-1/2"	

NOTE: (1) An adequately sized bleed line must be installed in the cooling tower system to prevent build-up of impurities in the recirculated water.
(2) Do not use catalog drawings for certified prints. Dimensions and weights are subject to change.
(3) Adequate spacing must be allowed for access to the cooling tower. Refer to EVAPCO's Equipment Layout Manual.
(4) Nominal Tonnage is based on 3 gpm per ton at 95 degree entering water temperature, 85 degree leaving water temperature, and 78 degree wet-bulb temperature.

✧ Outlet connection extends beyond bottom flange.
† Height includes fan guard which ships factory mounted.
✦ Heaviest section is upper section.

Models: AT/UT/USS 220-2I12 to 220-4N12

Two-Cell Cooling Towers

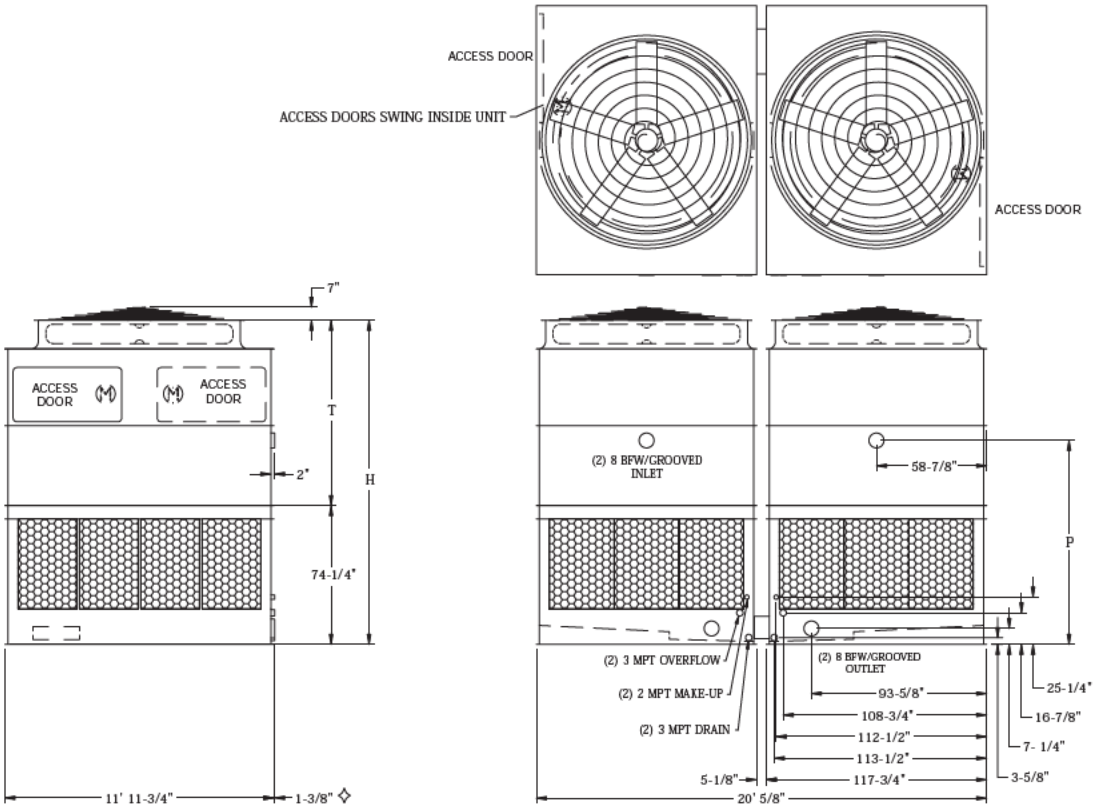

Model No.	Nominal Tonnage	WEIGHTS (LBS)			Fan Motor (HP)	Air Flow (CFM)	DIMENSIONS		
		Shipping	Operating	Heaviest Section✦			H†	T†	P
AT 220-2I12	455	13,300	23,220	4,200	(2) 10	128,800	14′ 5-1/4″	8′ 3″	9′ 1″
AT 220-2J12	553	13,440	23,360	4,270	(2) 15	146,300	14′ 5-1/4″	8′ 3″	9′ 1″
AT 220-2K12	611	13,540	23,460	4,320	(2) 20	160,300	14′ 5-1/4″	8′ 3″	9′ 1″
AT 220-2L12	651	13,640	23,560	4,370	(2) 25	172,200	14′ 5-1/4″	8′ 3″	9′ 1″
AT 220-2M12	684	13,840	23,760	4,470	(2) 30	182,500	14′ 5-1/4″	8′ 3″	9′ 1″
AT 220-3I12	529	14,260	24,180	4,680	(2) 10	126,700	15′ 5-1/4″	9′ 3″	10′ 1″
AT 220-3J12	618	14,400	24,320	4,750	(2) 15	143,800	15′ 5-1/4″	9′ 3″	10′ 1″
AT 220-3K12	676	14,500	24,420	4,800	(2) 20	157,400	15′ 5-1/4″	9′ 3″	10′ 1″
AT 220-3L12	722	14,600	24,520	4,850	(2) 25	168,900	15′ 5-1/4″	9′ 3″	10′ 1″
AT 220-3M12	760	14,800	24,720	4,950	(2) 30	179,000	15′ 5-1/4″	9′ 3″	10′ 1″
AT 220-4I12	555	15,100	25,020	5,100	(2) 10	124,700	16′ 5-1/4″	10′ 3″	11′ 1″
AT 220-4J12	644	15,240	25,160	5,170	(2) 15	141,600	16′ 5-1/4″	10′ 3″	11′ 1″
AT 220-4K12	701	15,340	25,260	5,220	(2) 20	155,000	16′ 5-1/4″	10′ 3″	11′ 1″
AT 220-4L12	746	15,440	25,360	5,270	(2) 25	166,300	16′ 5-1/4″	10′ 3″	11′ 1″
AT 220-4M12	785	15,640	25,560	5,370	(2) 30	176,100	16′ 5-1/4″	10′ 3″	11′ 1″
AT 220-4N12	820	16,140	26,060	5,620	(2) 35	184,800	16′ 5-1/4″	10′ 3″	11′ 1″
SLSF Addition		1,400	1,400	700			1′ 9-1/2″	1′ 9-1/2″	

NOTE: (1) An adequately sized bleed line must be installed in the cooling tower system to prevent build-up of impurities in the recirculated water.
(2) Do not use catalog drawings for certified prints. Dimensions and weights are subject to change.
(3) Adequate spacing must be allowed for access to the cooling tower. Refer to EVAPCO's Equipment Layout Manual.
(4) Nominal Tonnage is based on 3 gpm per ton at 95 degree entering water temperature, 85 degree leaving water temperature, and 78 degree wet-bulb temperature.

✧ Outlet connection extends beyond bottom flange.
✦ Heaviest section is upper section.
† Height includes fan guard which ships factory mounted.

Models: AT/UT/USS 210-2124 to 210-4N24

Two-Cell Cooling Towers

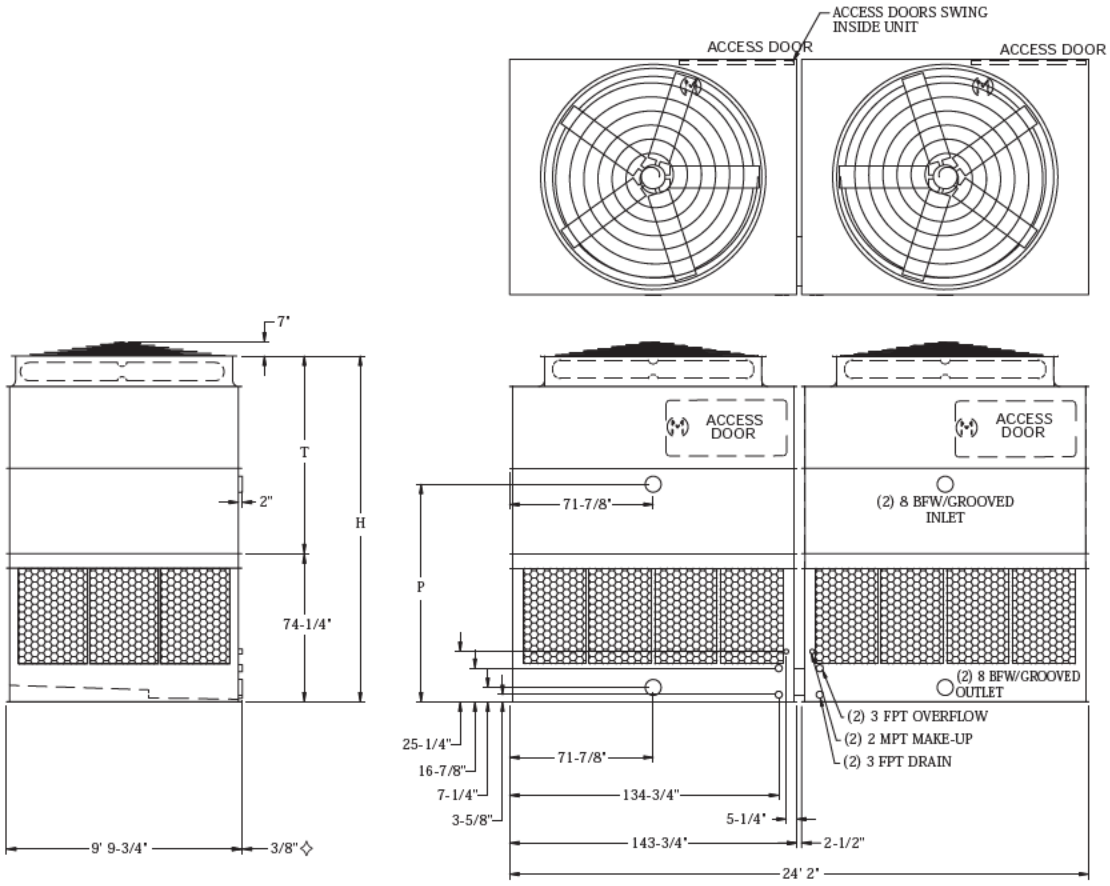

Model No.	Nominal Tonnage	WEIGHTS (LBS)			Fan Motor (HP)	Air Flow (CFM)	DIMENSIONS		
		Shipping	Operating	Heaviest Section✦			H†	T†	P
AT 210-2I24	455	13,280	23,200	4,200	(2) 10	129,400	14' 5-1/4"	8' 3"	9' 1"
AT 210-2J24	553	13,420	23,340	4,270	(2) 15	147,000	14' 5-1/4"	8' 3"	9' 1"
AT 210-2K24	611	13,520	23,440	4,320	(2) 20	161,100	14' 5-1/4"	8' 3"	9' 1"
AT 210-2L24	651	13,620	23,540	4,370	(2) 25	173,000	14' 5-1/4"	8' 3"	9' 1"
AT 210-2M24	684	13,820	23,740	4,470	(2) 30	183,300	14' 5-1/4"	8' 3"	9' 1"
AT 210-3I24	529	14,240	24,160	4,680	(2) 10	127,300	15' 5-1/4"	9' 3"	10' 1"
AT 210-3J24	618	14,380	24,300	4,750	(2) 15	144,500	15' 5-1/4"	9' 3"	10' 1"
AT 210-3K24	676	14,480	24,400	4,800	(2) 20	158,200	15' 5-1/4"	9' 3"	10' 1"
AT 210-3L24	722	14,580	24,500	4,850	(2) 25	169,700	15' 5-1/4"	9' 3"	10' 1"
AT 210-3M24	760	14,780	24,700	4,950	(2) 30	179,800	15' 5-1/4"	9' 3"	10' 1"
AT 210-4I24	555	15,080	25,000	5,100	(2) 10	125,300	16' 5-1/4"	10' 3"	11' 1"
AT 210-4J24	644	15,220	25,140	5,170	(2) 15	142,300	16' 5-1/4"	10' 3"	11' 1"
AT 210-4K24	701	15,320	25,240	5,220	(2) 20	155,800	16' 5-1/4"	10' 3"	11' 1"
AT 210-4L24	746	15,420	25,340	5,270	(2) 25	167,100	16' 5-1/4"	10' 3"	11' 1"
AT 210-4M24	785	15,620	25,540	5,370	(2) 30	176,900	16' 5-1/4"	10' 3"	11' 1"
AT 210-4N24	820	16,120	26,040	5,620	(2) 40	185,600	16' 5-1/4"	10' 3"	11' 1"
SLSF Addition		1,400	1,400	700			1' 9-1/2"	1' 9-1/2"	

NOTE: (1) An adequately sized bleed line must be installed in the cooling tower system to prevent build-up of impurities in the recirculated water.
(2) Do not use catalog drawings for certified prints. Dimensions and weights are subject to change.
(3) Adequate spacing must be allowed for access to the cooling tower. Refer to EVAPCO's Equipment Layout Manual.
(4) Nominal Tonnage is based on 3 gpm per ton at 95 degree entering water temperature, 85 degree leaving water temperature, and 78 degree wet-bulb temperature.

✧ Outlet connection extends beyond bottom flange.
† Height includes fan guard which ships factory mounted.
✦ Heaviest section is upper section.

Models: AT/UT/USS 310-2I36 to 310-4N36

Three-Cell Cooling Towers

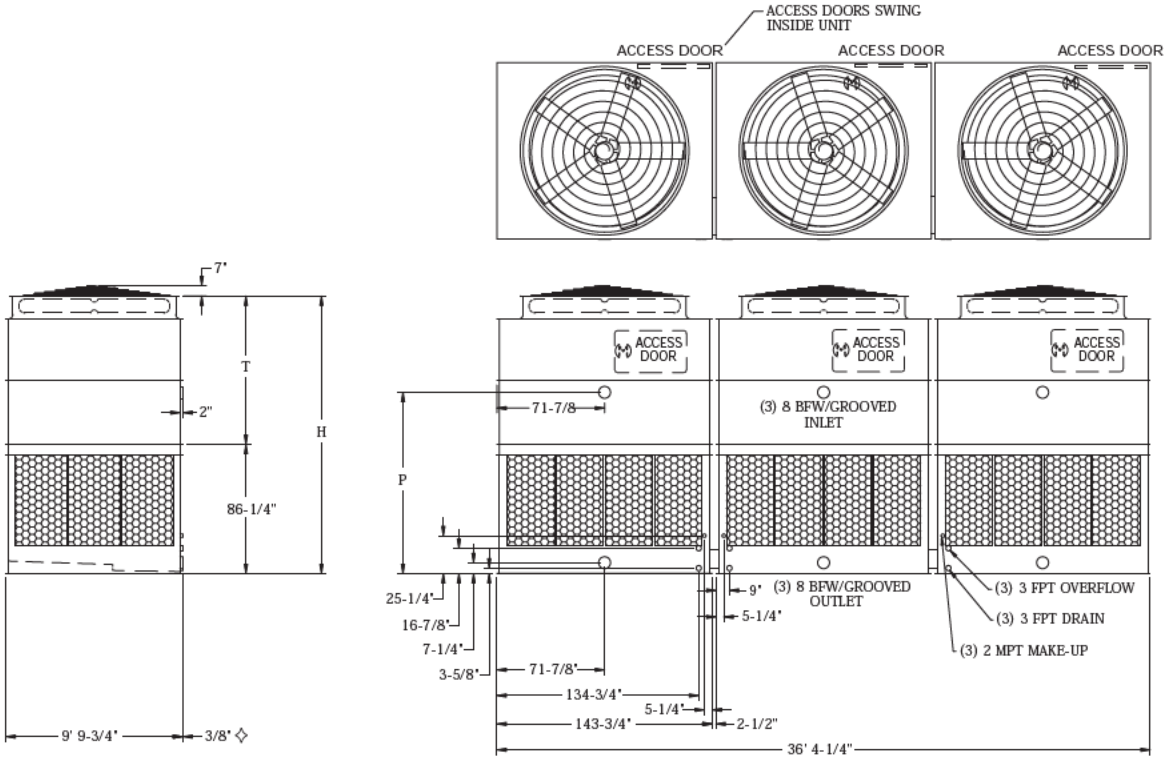

Model No.	Nominal Tonnage	WEIGHTS (LBS)			Fan Motor (HP)	Air Flow (CFM)	DIMENSIONS		
		Shipping	Operating	Heaviest Section✦			H†	T†	P
AT 310-2I36	672	20,730	35,780	4,200	(3) 10	194,400	15' 5-1/4"	8' 3"	10' 1"
AT 310-2J36	817	20,940	35,990	4,270	(3) 15	220,800	15' 5-1/4"	8' 3"	10' 1"
AT 310-2K36	903	21,090	36,140	4,320	(3) 20	242,000	15' 5-1/4"	8' 3"	10' 1"
AT 310-2L36	963	21,240	36,290	4,370	(3) 25	259,900	15' 5-1/4"	8' 3"	10' 1"
AT 310-2M36	1,012	21,540	36,590	4,470	(3) 30	275,400	15' 5-1/4"	8' 3"	10' 1"
AT 310-3I36	782	22,170	37,220	4,680	(3) 10	191,200	16' 5-1/4"	9' 3"	11' 1"
AT 310-3J36	914	22,380	37,430	4,750	(3) 15	217,100	16' 5-1/4"	9' 3"	11' 1"
AT 310-3K36	1,000	22,530	37,580	4,800	(3) 20	237,600	16' 5-1/4"	9' 3"	11' 1"
AT 310-3L36	1,068	22,680	37,730	4,850	(3) 25	255,000	16' 5-1/4"	9' 3"	11' 1"
AT 310-3M36	1,126	22,980	38,030	4,950	(3) 30	270,100	16' 5-1/4"	9' 3"	11' 1"
AT 310-4I36	821	23,430	38,480	5,100	(3) 10	188,100	17' 5-1/4"	10' 3"	12' 1"
AT 310-4J36	953	23,640	38,690	5,170	(3) 15	213,700	17' 5-1/4"	10' 3"	12' 1"
AT 310-4K36	1,038	23,790	38,840	5,220	(3) 20	234,000	17' 5-1/4"	10' 3"	12' 1"
AT 310-4L36	1,106	23,940	38,990	5,270	(3) 25	251,000	17' 5-1/4"	10' 3"	12' 1"
AT 310-4M36	1,164	24,240	39,290	5,370	(3) 30	265,800	17' 5-1/4"	10' 3"	12' 1"
AT 310-4N36	1,216	24,990	40,040	5,620	(3) 35	278,900	17' 5-1/4"	10' 3"	12' 1"
SLSF Addition		2,100	2,100	700			1' 9-1/2"	1' 9-1/2"	

NOTE: (1) An adequately sized bleed line must be installed in the cooling tower system to prevent build-up of impurities in the recirculated water.
(2) Do not use catalog drawings for certified prints. Dimensions and weights are subject to change.
(3) Adequate spacing must be allowed for access to the cooling tower. Refer to EVAPCO's Equipment Layout Manual.
(4) Nominal Tonnage is based on 3 gpm per ton at 95 degree entering water temperature, 85 degree leaving water temperature, and 78 degree wet-bulb temperature.

✧ Outlet connection extends beyond bottom flange.
† Height includes fan guard which ships factory mounted.
✦ Heaviest section is upper section.

Models: AT/UT/USS 110-2I18 to 110-4N18

One-Cell Cooling Towers

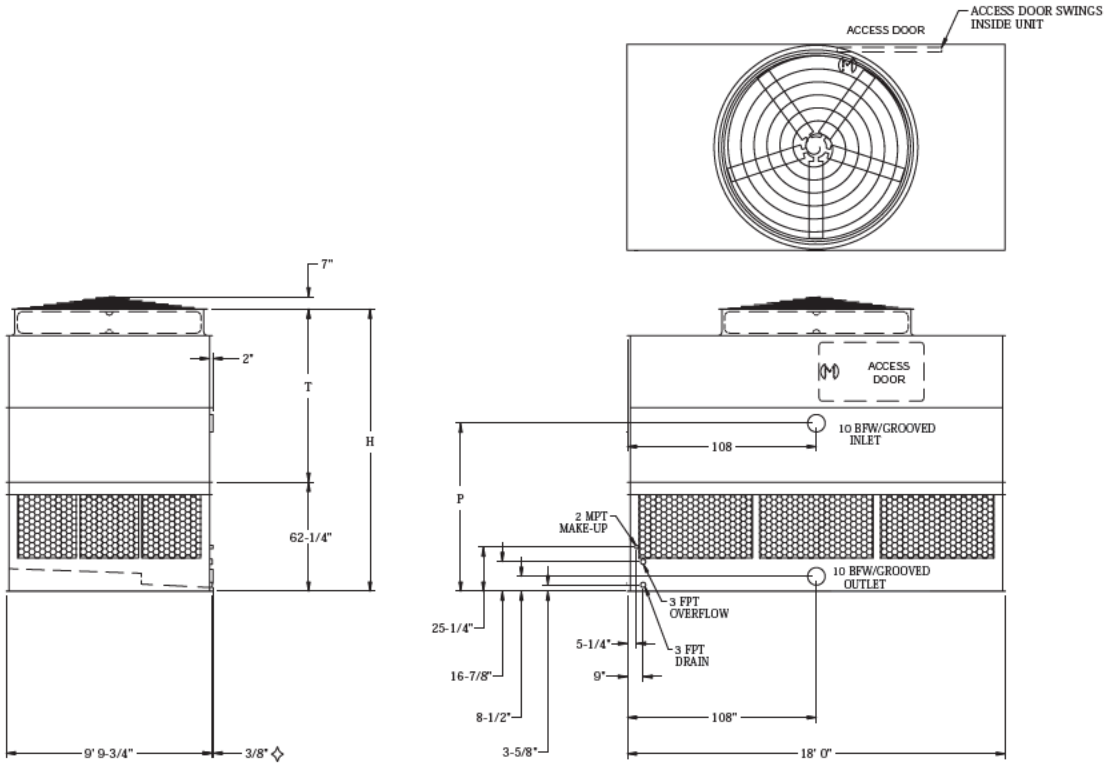

Model No.	Nominal Tonnage	WEIGHTS (LBS)			Fan Motor (HP)	Air Flow (CFM)	DIMENSIONS		
		Shipping	Operating	Heaviest Section✦			H†	T†	P
AT 110-2I18	290	9,190	16,790	5,640	10	86,000	13' 5-1/4"	8' 3"	8' 0"
AT 110-2J18	351	9,260	16,860	5,710	15	97,800	13' 5-1/4"	8' 3"	8' 0"
AT 110-2K18	389	9,310	16,910	5,760	20	107,200	13' 5-1/4"	8' 3"	8' 0"
AT 110-2L18	420	9,360	16,960	5,810	25	115,100	13' 5-1/4"	8' 3"	8' 0"
AT 110-2M18	445	9,460	17,060	5,910	30	122,000	13' 5-1/4"	8' 3"	8' 0"
AT 110-3I18	333	9,880	17,480	6,330	10	84,700	14' 5-1/4"	9' 3"	9' 0"
AT 110-3J18	395	9,950	17,550	6,400	15	96,300	14' 5-1/4"	9' 3"	9' 0"
AT 110-3K18	437	10,000	17,600	6,450	20	105,500	14' 5-1/4"	9' 3"	9' 0"
AT 110-3L18	471	10,050	17,650	6,500	25	113,100	14' 5-1/4"	9' 3"	9' 0"
AT 110-3M18	499	10,150	17,750	6,600	30	119,800	14' 5-1/4"	9' 3"	9' 0"
AT 110-3N18	547	10,400	18,000	6,850	40	131,100	14' 5-1/4"	9' 3"	9' 0"
AT 110-4I18	364	10,510	18,110	6,960	10	83,300	15' 5-1/4"	10' 3"	10' 0"
AT 110-4J18	420	10,580	18,180	7,030	15	94,700	15' 5-1/4"	10' 3"	10' 0"
AT 110-4K18	460	10,630	18,230	7,080	20	103,800	15' 5-1/4"	10' 3"	10' 0"
AT 110-4L18	493	10,680	18,280	7,130	25	111,300	15' 5-1/4"	10' 3"	10' 0"
AT 110-4M18	522	10,780	18,380	7,230	30	117,900	15' 5-1/4"	10' 3"	10' 0"
AT 110-4N18	570	11,030	18,630	7,480	40	129,000	15' 5-1/4"	10' 3"	10' 0"
SLSF Addition		700	700	700			1' 9-1/2"	1' 9-1/2"	

NOTE: (1) An adequately sized bleed line must be installed in the cooling tower system to prevent build-up of impurities in the recirculated water.
(2) Do not use catalog drawings for certified prints. Dimensions and weights are subject to change.
(3) Adequate spacing must be allowed for access to the cooling tower. Refer to EVAPCO's Equipment Layout Manual.
(4) Nominal Tonnage is based on 3 gpm per ton at 95 degree entering water temperature, 85 degree leaving water temperature, and 78 degree wet-bulb temperature.
(5) This box size is available in a dual fan/cell configuration.

✧ Outlet connection extends beyond bottom flange.
✦ Heaviest section is upper section.
† Height includes fan guard which ships factory mounted.

Models: AT/UT/USS 220-2I18 to 220-4N18

Two-Cell Cooling Towers

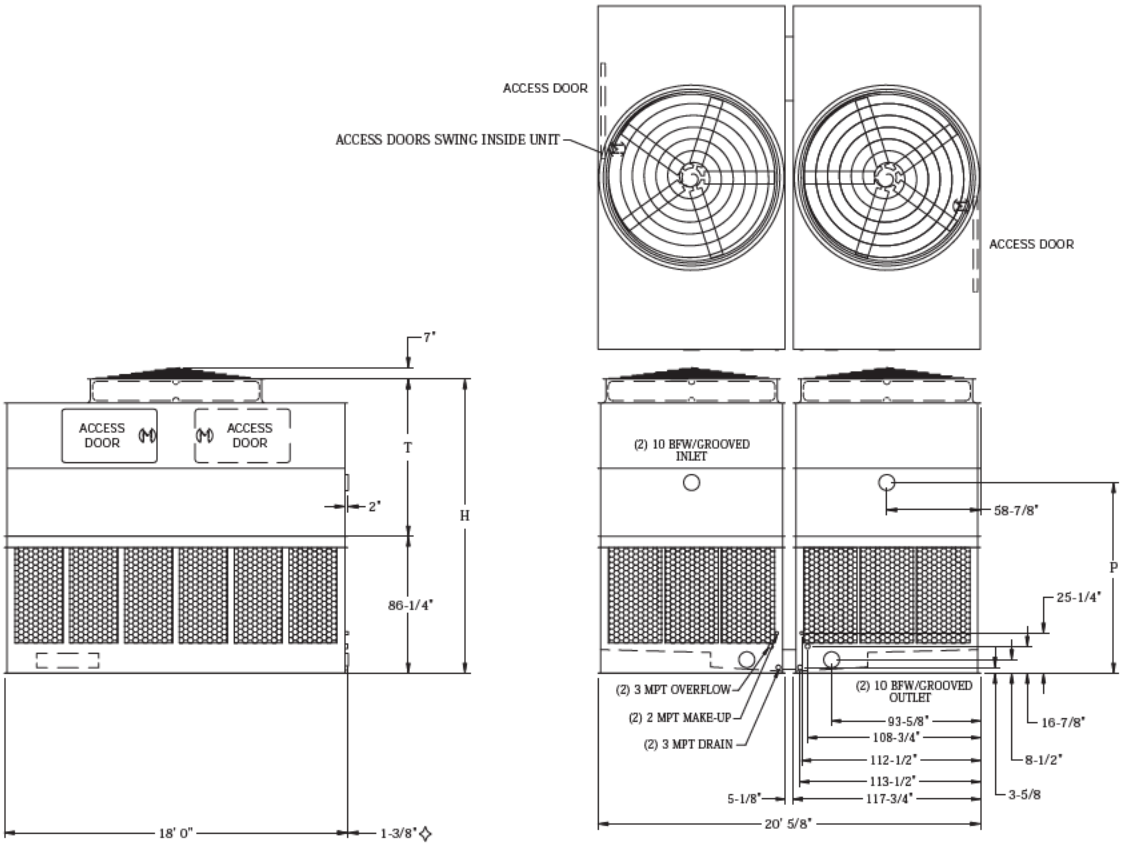

Model No.	Nominal Tonnage	WEIGHTS (LBS)			Fan Motor (HP)	Air Flow (CFM)	DIMENSIONS		
		Shipping	Operating	Heaviest Section✦			H†	T†	P
AT 220-2I18	580	19,100	34,300	5,640	(2) 10	171,200	15' 5-1/4"	8' 3"	10' 0"
AT 220-2J18	701	19,240	34,440	5,710	(2) 15	194,700	15' 5-1/4"	8' 3"	10' 0"
AT 220-2K18	779	19,340	34,540	5,760	(2) 20	213,400	15' 5-1/4"	8' 3"	10' 0"
AT 220-2L18	840	19,440	34,640	5,810	(2) 25	229,100	15' 5-1/4"	8' 3"	10' 0"
AT 220-2M18	890	19,640	34,840	5,910	(2) 30	242,900	15' 5-1/4"	8' 3"	10' 0"
AT 220-3I18	667	20,480	35,680	6,330	(2) 10	168,600	16' 5-1/4"	9' 3"	11' 0"
AT 220-3J18	790	20,620	35,820	6,400	(2) 15	191,700	16' 5-1/4"	9' 3"	11' 0"
AT 220-3K18	873	20,720	35,920	6,450	(2) 20	209,900	16' 5-1/4"	9' 3"	11' 0"
AT 220-3L18	941	20,820	36,020	6,500	(2) 25	225,100	16' 5-1/4"	9' 3"	11' 0"
AT 220-3M18	997	21,020	36,220	6,600	(2) 30	238,400	16' 5-1/4"	9' 3"	11' 0"
AT 220-3N18	1,093	21,520	36,720	6,850	(2) 40	260,900	16' 5-1/4"	9' 3"	11' 0"
AT 220-4I18	727	21,740	36,940	6,960	(2) 10	165,700	17' 5-1/4"	10' 3"	12' 0"
AT 220-4J18	839	21,880	37,080	7,030	(2) 15	188,500	17' 5-1/4"	10' 3"	12' 0"
AT 220-4K18	921	21,980	37,180	7,080	(2) 20	206,500	17' 5-1/4"	10' 3"	12' 0"
AT 220-4L18	987	22,080	37,280	7,130	(2) 25	221,600	17' 5-1/4"	10' 3"	12' 0"
AT 220-4M18	1,044	22,280	37,480	7,230	(2) 30	234,700	17' 5-1/4"	10' 3"	12' 0"
AT 220-4N18	1,140	22,780	37,980	7,480	(2) 40	256,800	17' 5-1/4"	10' 3"	12' 0"
SLSF Addition		1,400	1,400	700			1' 9-1/2"	1' 9-1/2"	

NOTE: (1) An adequately sized bleed line must be installed in the cooling tower system to prevent build-up of impurities in the recirculated water.
(2) Do not use catalog drawings for certified prints. Dimensions and weights are subject to change.
(3) Adequate spacing must be allowed for access to the cooling tower. Refer to EVAPCO's Equipment Layout Manual.
(4) Nominal Tonnage is based on 3 gpm per ton at 95 degree entering water temperature, 85 degree leaving water temperature, and 78 degree wet-bulb temperature.
(5) This box size is available in a dual fan/cell configuration.

◇ Outlet connection extends beyond bottom flange.
✦ Heaviest section is upper section.
† Height includes fan guard which ships factory mounted.

Models: AT/UT/USS 210-2136 to 210-4N36

Two-Cell Cooling Towers

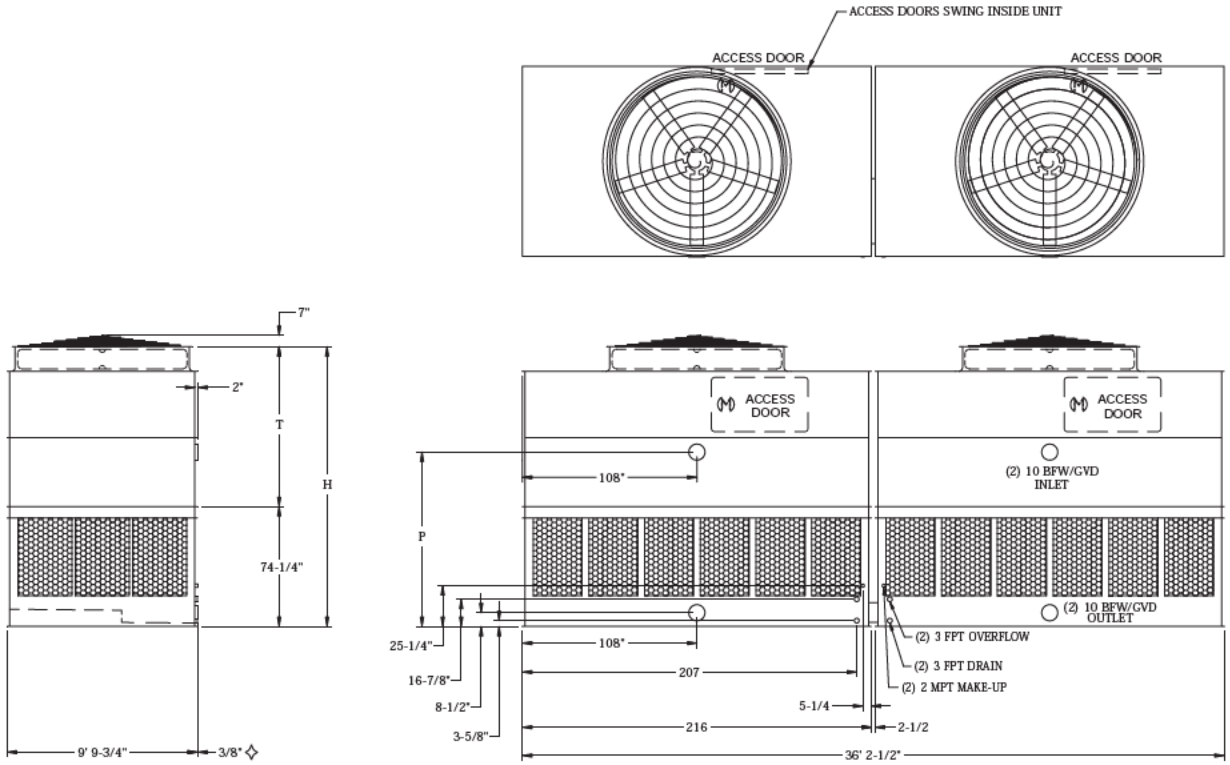

Model No.	Nominal Tonnage	WEIGHTS (LBS)			Fan Motor (HP)	Air Flow (CFM)	DIMENSIONS		
		Shipping	Operating	Heaviest Section✦			H†	T†	P
AT 210-2I36	580	18,440	33,640	5,640	(2)10	172,000	14' 5-1/4"	8' 3"	9' 0"
AT 210-2J36	701	18,580	33,780	5,710	(2)15	195,600	14' 5-1/4"	8' 3"	9' 0"
AT 210-2K36	779	18,680	33,880	5,760	(2) 20	214,400	14' 5-1/4"	8' 3"	9' 0"
AT 210-2L36	840	18,780	33,980	5,810	(2) 25	230,200	14' 5-1/4"	8' 3"	9' 0"
AT 210-2M36	890	18,980	34,180	5,910	(2) 30	244,000	14' 5-1/4"	8' 3"	9' 0"
AT 210-3I36	667	19,820	35,020	6,330	(2)10	169,400	15' 5-1/4"	9' 3"	10' 0"
AT 210-3J36	790	19,960	35,160	6,400	(2)15	192,600	15' 5-1/4"	9' 3"	10' 0"
AT 210-3K36	873	20,060	35,260	6,450	(2) 20	210,900	15' 5-1/4"	9' 3"	10' 0"
AT 210-3L36	941	20,160	35,360	6,500	(2) 25	226,200	15' 5-1/4"	9' 3"	10' 0"
AT 210-3M36	997	20,360	35,560	6,600	(2) 30	239,500	15' 5-1/4"	9' 3"	10' 0"
AT 210-3N36	1,093	20,860	36,060	6,850	(2) 40	262,100	15' 5-1/4"	9' 3"	10' 0"
AT 210-4I36	727	21,080	36,280	6,960	(2)10	166,500	16' 5-1/4"	10' 3"	11' 0"
AT 210-4J36	839	21,220	36,420	7,030	(2)15	189,400	16' 5-1/4"	10' 3"	11' 0"
AT 210-4K36	921	21,320	36,520	7,080	(2) 20	207,500	16' 5-1/4"	10' 3"	11' 0"
AT 210-4L36	987	21,420	36,620	7,130	(2) 25	222,600	16' 5-1/4"	10' 3"	11' 0"
AT 210-4M36	1,044	21,620	36,820	7,230	(2) 30	235,700	16' 5-1/4"	10' 3"	11' 0"
AT 210-4N36	1,140	22,120	37,320	7,480	(2) 40	257,900	16' 5-1/4"	10' 3"	11' 0"
SLSF Addition		1,400	1,400	700			1' 9-1/2"	1' 9-1/2"	

NOTE: (1) An adequately sized bleed line must be installed in the cooling tower system to prevent build-up of impurities in the recirculated water.
(2) Do not use catalog drawings for certified prints. Dimensions and weights are subject to change.
(3) Adequate spacing must be allowed for access to the cooling tower. Refer to EVAPCO's Equipment Layout Manual.
(4) Nominal Tonnage is based on 3 gpm per ton at 95 degree entering water temperature, 85 degree leaving water temperature, and 78 degree wet-bulb temperature.
(5) This box size is available in a dual fan/cell configuration.

✧ Outlet connection extends beyond bottom flange.
† Height includes fan guard which ships factory mounted.
✦ Heaviest section is upper section.

Models: AT/UT/USS 112-2I12 to 112-4N12

One-Cell Cooling Towers

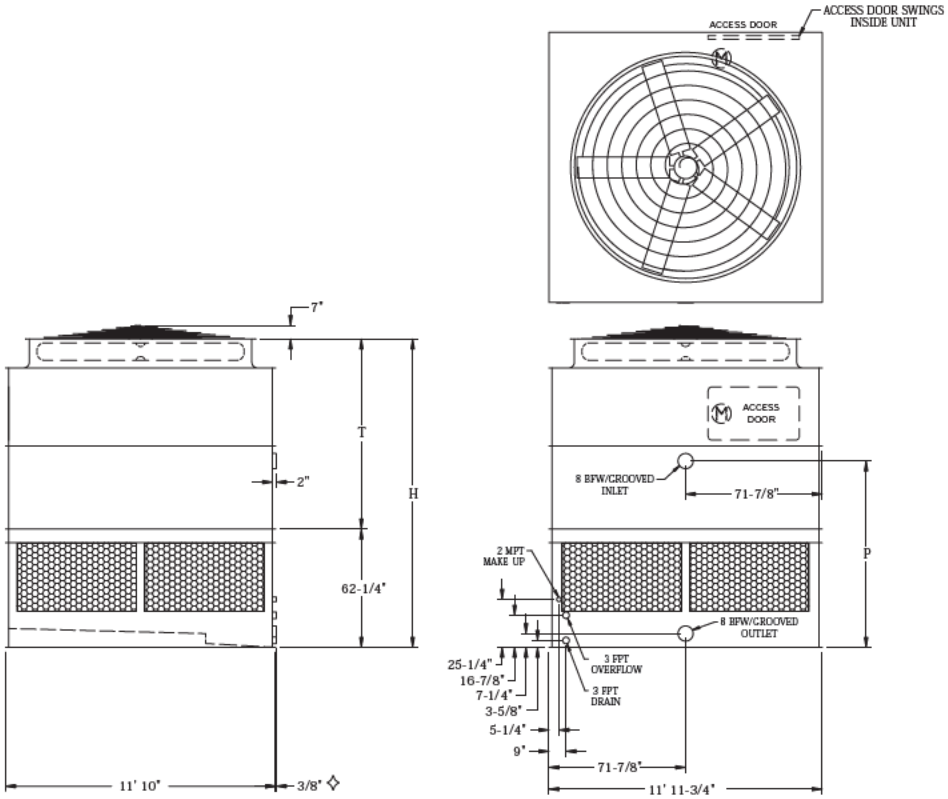

Model No.	Nominal Tonnage	WEIGHTS (LBS)			Fan Motor (HP)	Air Flow (CFM)	DIMENSIONS		
		Shipping	Operating	Heaviest Section✦			H†	T†	P
AT 112-2I12	280	7,330	13,540	4,930	10	71,600	13' 6-1/4"	8' 4"	8' 2"
AT 112-2J12	334	7,400	13,610	5,000	15	81,400	13' 6-1/4"	8' 4"	8' 2"
AT 112-2K12	364	7,450	13,660	5,050	20	89,200	13' 6-1/4"	8' 4"	8' 2"
AT 112-2L12	391	7,500	13,710	5,100	25	95,800	13' 6-1/4"	8' 4"	8' 2"
AT 112-2M12	414	7,600	13,810	5,200	30	101,500	13' 6-1/4"	8' 4"	8' 2"
AT 112-3I12	316	7,870	14,080	5,470	10	70,500	14' 6-1/4"	9' 4"	9' 2"
AT 112-3J12	370	7,940	14,150	5,540	15	80,000	14' 6-1/4"	9' 4"	9' 2"
AT 112-3K12	404	7,990	14,200	5,590	20	87,600	14' 6-1/4"	9' 4"	9' 2"
AT 112-3L12	434	8,040	14,250	5,640	25	93,900	14' 6-1/4"	9' 4"	9' 2"
AT 112-3M12	461	8,140	14,350	5,740	30	99,500	14' 6-1/4"	9' 4"	9' 2"
AT 112-4I12	337	8,360	14,570	5,960	10	69,300	15' 6-1/4"	10' 4"	10' 2"
AT 112-4J12	387	8,430	14,640	6,030	15	78,800	15' 6-1/4"	10' 4"	10' 2"
AT 112-4K12	422	8,480	14,690	6,080	20	86,200	15' 6-1/4"	10' 4"	10' 2"
AT 112-4L12	454	8,530	14,740	6,130	25	92,400	15' 6-1/4"	10' 4"	10' 2"
AT 112-4M12	481	8,630	14,840	6,230	30	97,800	15' 6-1/4"	10' 4"	10' 2"
AT 112-4N12	515	8,880	15,090	6,480	40	107,100	15' 6-1/4"	10' 4"	10' 2"
SLSF Addition		700	700	700			1' 9-1/2"	1' 9-1/2"	

NOTE: (1) An adequately sized bleed line must be installed in the cooling tower system to prevent build-up of impurities in the recirculated water.
(2) Do not use catalog drawings for certified prints. Dimensions and weights are subject to change.
(3) Adequate spacing must be allowed for access to the cooling tower. Refer to EVAPCO's Equipment Layout Manual.
(4) Nominal Tonnage is based on 3 gpm per ton at 95 degree entering water temperature, 85 degree leaving water temperature, and 78 degree wet-bulb temperature.

✧ Outlet connection extends beyond bottom flange.
† Height includes fan guard which ships factory mounted.
✦ Heaviest section is upper section.

Models: AT/UT/USS 212-2124 to 212-4N24

Two-Cell Cooling Towers

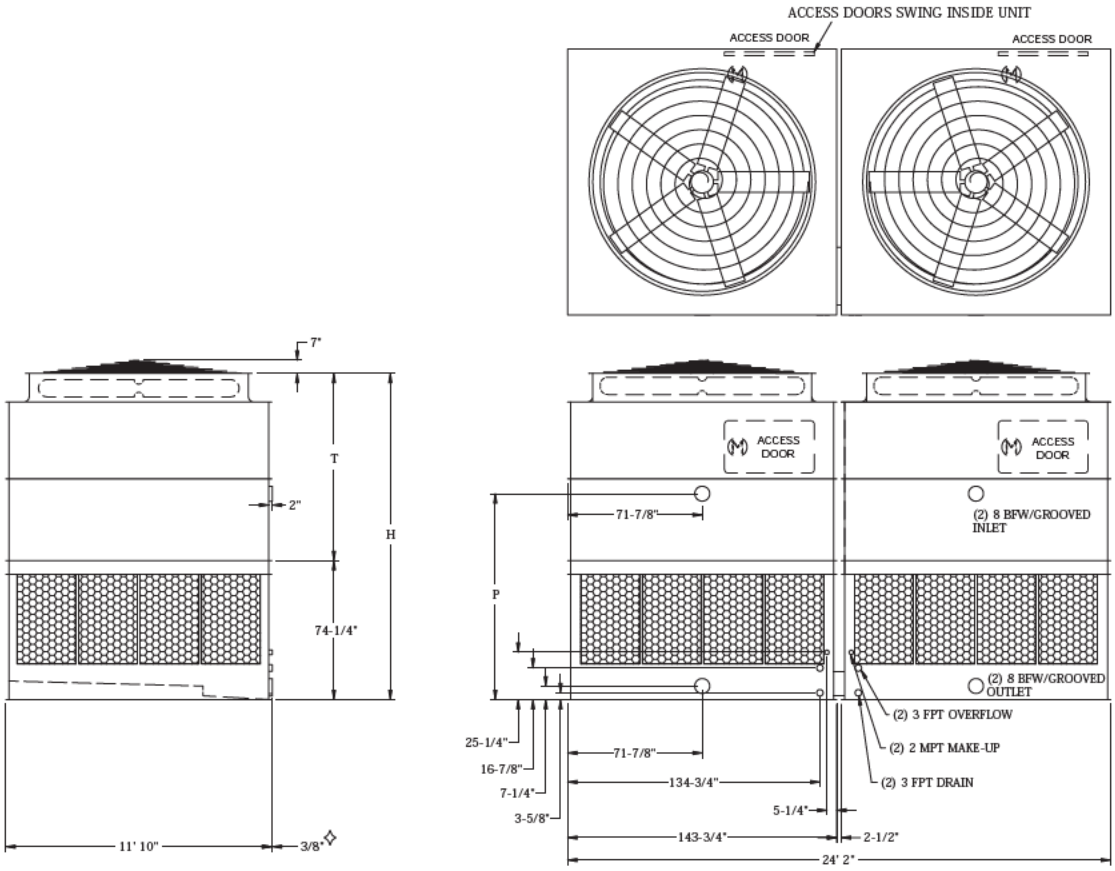

Model No.	Nominal Tonnage	WEIGHTS (LBS)			Fan Motor (HP)	Air Flow (CFM)	DIMENSIONS		
		Shipping	Operating	Heaviest Section✦			H†	T†	P
AT 212-2I24	560	14,800	27,220	4,860	(2) 10	143,100	14' 6-1/4"	8' 4"	9' 2"
AT 212-2J24	667	15,080	27,500	5,000	(2) 15	162,700	14' 6-1/4"	8' 4"	9' 2"
AT 212-2K24	729	15,180	27,600	5,050	(2) 20	178,300	14' 6-1/4"	8' 4"	9' 2"
AT 212-2L24	782	15,280	27,700	5,100	(2) 25	191,500	14' 6-1/4"	8' 4"	9' 2"
AT 212-2M24	828	15,480	27,900	5,200	(2) 30	202,900	14' 6-1/4"	8' 4"	9' 2"
AT 212-3I24	633	15,880	28,300	5,400	(2)1 0	140,900	15' 6-1/4"	9' 4"	10' 2"
AT 212-3J24	740	16,160	28,580	5,540	(2) 15	160,000	15' 6-1/4"	9' 4"	10' 2"
AT 212-3K24	807	16,260	28,680	5,590	(2) 20	175,100	15' 6-1/4"	9' 4"	10' 2"
AT 212-3L24	868	16,360	28,780	5,640	(2) 25	187,800	15' 6-1/4"	9' 4"	10' 2"
AT 212-3M24	922	16,560	28,980	5,740	(2) 30	198,900	15' 6-1/4"	9' 4"	10' 2"
AT 212-4I24	674	16,860	29,280	5,890	(2) 10	138,600	16' 6-1/4"	10' 4"	11' 2"
AT 212-4J24	775	17,140	29,560	6,030	(2) 15	157,500	16' 6-1/4"	10' 4"	11' 2"
AT 212-4K24	843	17,240	29,660	6,080	(2) 20	172,400	16' 6-1/4"	10' 4"	11' 2"
AT 212-4L24	908	17,340	29,760	6,130	(2) 25	184,800	16' 6-1/4"	10' 4"	11' 2"
AT 212-4M24	963	17,540	29,960	6,230	(2) 30	195,600	16' 6-1/4"	10' 4"	11' 2"
AT 212-4N24	1,030	18,040	30,460	6,480	(2) 40	214,100	16' 6-1/4"	10' 4"	11' 2"
SLSF Addition		1,400	1,400	700			1' 9-1/2"	1' 9-1/2"	

NOTE: (1) An adequately sized bleed line must be installed in the cooling tower system to prevent build-up of impurities in the recirculated water.
(2) Do not use catalog drawings for certified prints. Dimensions and weights are subject to change.
(3) Adequate spacing must be allowed for access to the cooling tower. Refer to EVAPCO's Equipment Layout Manual.
(4) Nominal Tonnage is based on 3 gpm per ton at 95 degree entering water temperature, 85 degree leaving water temperature, and 78 degree wet-bulb temperature.

✧ Outlet connection extends beyond bottom flange.
† Height includes fan guard which ships factory mounted.
✦ Heaviest section is upper section.

Models: AT/UT/USS 312-2136 to 312-4N36

Three-Cell Cooling Towers

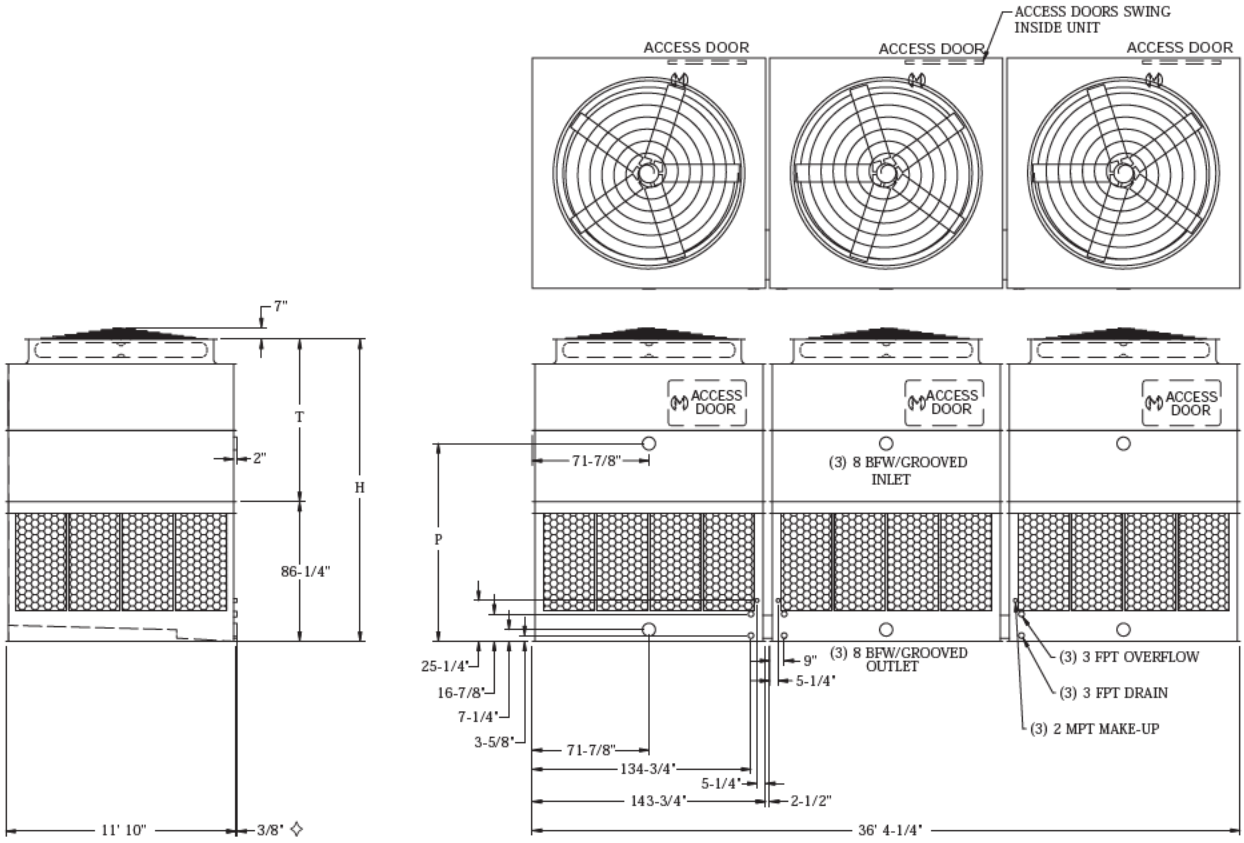

Model No.	Nominal Tonnage	WEIGHTS (LBS)			Fan Motor (HP)	Air Flow (CFM)	DIMENSIONS		
		Shipping	Operating	Heaviest Section✦			H†	T†	P
AT 312-2I36	851	22,830	41,460	4,930	(3) 10	216,800	15' 6-1/4"	8' 4"	10' 2"
AT 312-2J36	1,014	23,040	41,670	5,000	(3) 15	246,400	15' 6-1/4"	8' 4"	10' 2"
AT 312-2K36	1,106	23,190	41,820	5,050	(3) 20	270,100	15' 6-1/4"	8' 4"	10' 2"
AT 312-2L36	1,187	23,340	41,970	5,100	(3) 25	290,000	15' 6-1/4"	8' 4"	10' 2"
AT 312-2M36	1,257	23,640	42,270	5,200	(3) 30	307,200	15' 6-1/4"	8' 4"	10' 2"
AT 312-3I36	960	24,450	43,080	5,470	(3) 10	213,500	16' 6-1/4"	9' 4"	11' 2"
AT 312-3J36	1,122	24,660	43,290	5,540	(3) 15	242,300	16' 6-1/4"	9' 4"	11' 2"
AT 312-3K36	1,224	24,810	43,440	5,590	(3) 20	265,300	16' 6-1/4"	9' 4"	11' 2"
AT 312-3L36	1,316	24,960	43,590	5,640	(3) 25	284,500	16' 6-1/4"	9' 4"	11' 2"
AT 312-3M36	1,398	25,260	43,890	5,740	(3) 30	301,300	16' 6-1/4"	9' 4"	11' 2"
AT 312-4I36	1,021	25,920	44,550	5,960	(3) 10	209,900	17' 6-1/4"	10' 4"	12' 2"
AT 312-4J36	1,174	26,130	44,760	6,030	(3) 15	238,500	17' 6-1/4"	10' 4"	12' 2"
AT 312-4K36	1,277	26,280	44,910	6,080	(3) 20	261,100	17' 6-1/4"	10' 4"	12' 2"
AT 312-4L36	1,375	26,430	45,060	6,130	(3) 25	279,900	17' 6-1/4"	10' 4"	12' 2"
AT 312-4M36	1,458	26,730	45,360	6,230	(3) 30	296,200	17' 6-1/4"	10' 4"	12' 2"
AT 312-4N36	1,560	27,480	46,110	6,480	(3) 40	324,200	17' 6-1/4"	10' 4"	12' 2"
SLSF Addition		2,100	2,100	700			1' 9-1/2"	1' 9-1/2"	

NOTE: (1) An adequately sized bleed line must be installed in the cooling tower system to prevent build-up of impurities in the recirculated water.
(2) Do not use catalog drawings for certified prints. Dimensions and weights are subject to change.
(3) Adequate spacing must be allowed for access to the cooling tower. Refer to EVAPCO's Equipment Layout Manual.
(4) Nominal Tonnage is based on 3 gpm per ton at 95 degree entering water temperature, 85 degree leaving water temperature, and 78 degree wet-bulb temperature.

✧ Outlet connection extends beyond bottom flange.
† Height includes fan guard which ships factory mounted.
✦ Heaviest section is upper section.

Models: AT/UT/USS 424-2I24 to 424-4N24

Four-Cell Cooling Towers

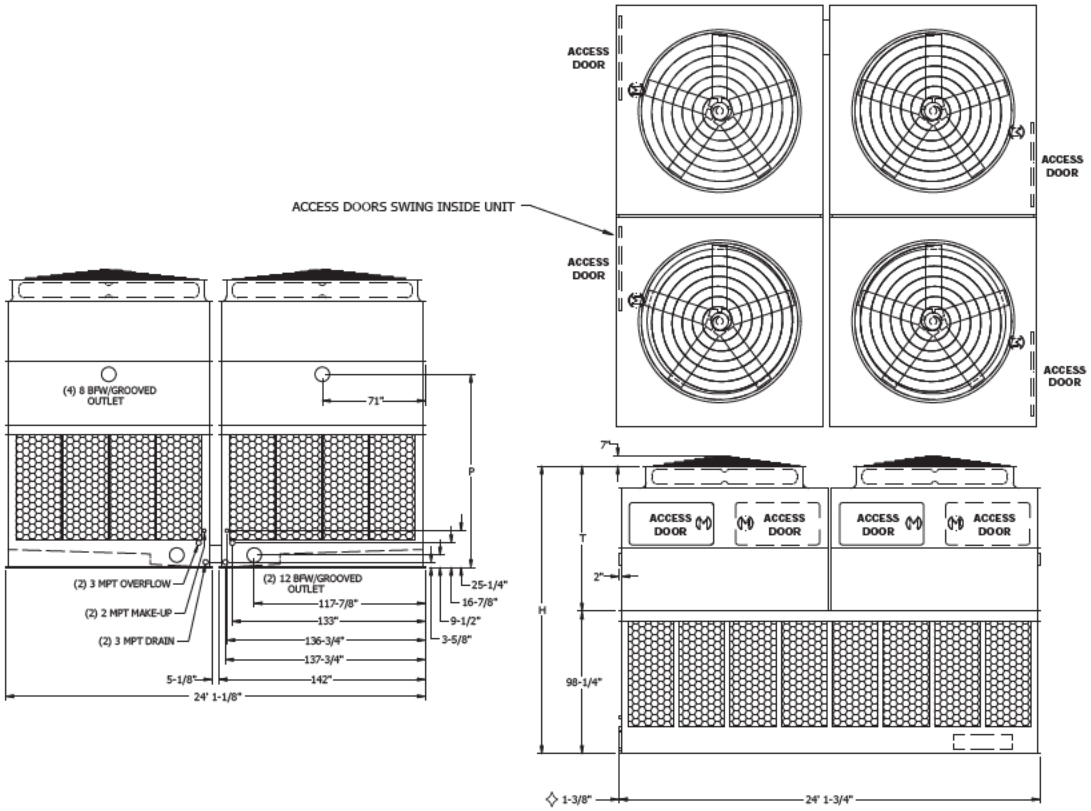

Model No.	Nominal Tonnage	WEIGHTS (LBS)			Fan Motor (HP)	Air Flow (CFM)	DIMENSIONS		
		Shipping	Operating	Heaviest Section✦			H†	T†	P
AT 424-2I24	1,114	31,020	55,340	5,790	(4) 10	283,500	16' 6-1/4"	8' 4"	11' 2"
AT 424-2J24	1,327	31,580	55,900	5,790	(4) 15	322,300	16' 6-1/4"	8' 4"	11' 2"
AT 424-2K24	1,449	31,780	56,100	5,790	(4) 20	353,400	16' 6-1/4"	8' 4"	11' 2"
AT 424-2L24	1,555	31,980	56,300	5,790	(4) 25	379,400	16' 6-1/4"	8' 4"	11' 2"
AT 424-2M24	1,647	32,380	56,700	5,790	(4) 30	401,900	16' 6-1/4"	8' 4"	11' 2"
AT 424-3I24	1,257	33,180	57,500	5,790	(4) 10	279,200	17' 6-1/4"	9' 4"	12' 2"
AT 424-3J24	1,471	33,740	58,060	5,790	(4) 15	317,000	17' 6-1/4"	9' 4"	12' 2"
AT 424-3K24	1,605	33,940	58,260	5,790	(4) 20	347,000	17' 6-1/4"	9' 4"	12' 2"
AT 424-3L24	1,727	34,140	58,460	5,790	(4) 25	372,200	17' 6-1/4"	9' 4"	12' 2"
AT 424-3M24	1,835	34,540	58,860	5,790	(4) 30	394,100	17' 6-1/4"	9' 4"	12' 2"
AT 424-4I24	1,340	35,140	59,460	5,890	(4) 10	274,500	18' 6-1/4"	10' 4"	13' 2"
AT 424-4J24	1,542	35,700	60,020	6,030	(4) 15	312,000	18' 6-1/4"	10' 4"	13' 2"
AT 424-4K24	1,678	35,900	60,220	6,080	(4) 20	341,600	18' 6-1/4"	10' 4"	13' 2"
AT 424-4L24	1,807	36,100	60,420	6,130	(4) 25	366,200	18' 6-1/4"	10' 4"	13' 2"
AT 424-4M24	1,916	36,500	60,820	6,230	(4) 30	387,500	18' 6-1/4"	10' 4"	13' 2"
AT 424-4N24	2,050	37,500	61,820	6,480	(4) 40	424,300	18' 6-1/4"	10' 4"	13' 2"
SLSF Addition		2,800	2,800	700			1' 9-1/2"	1' 9-1/2"	

NOTE: (1) An adequately sized bleed line must be installed in the cooling tower system to prevent build-up of impurities in the recirculated water.
(2) Do not use catalog drawings for certified prints. Dimensions and weights are subject to change.
(3) Adequate spacing must be allowed for access to the cooling tower. Refer to EVAPCO's Equipment Layout Manual.
(4) Nominal Tonnage is based on 3 gpm per ton at 95 degree entering water temperature, 85 degree leaving water temperature, and 78 degree wet-bulb temperature.

◇ Outlet connection extends beyond bottom flange. ✦ L=Lower Section, U=Upper Section

† Height includes fan guard which ships factory mounted.

Models: AT/UT/USS 112-2I14 to 112-4N14

One-Cell Cooling Towers

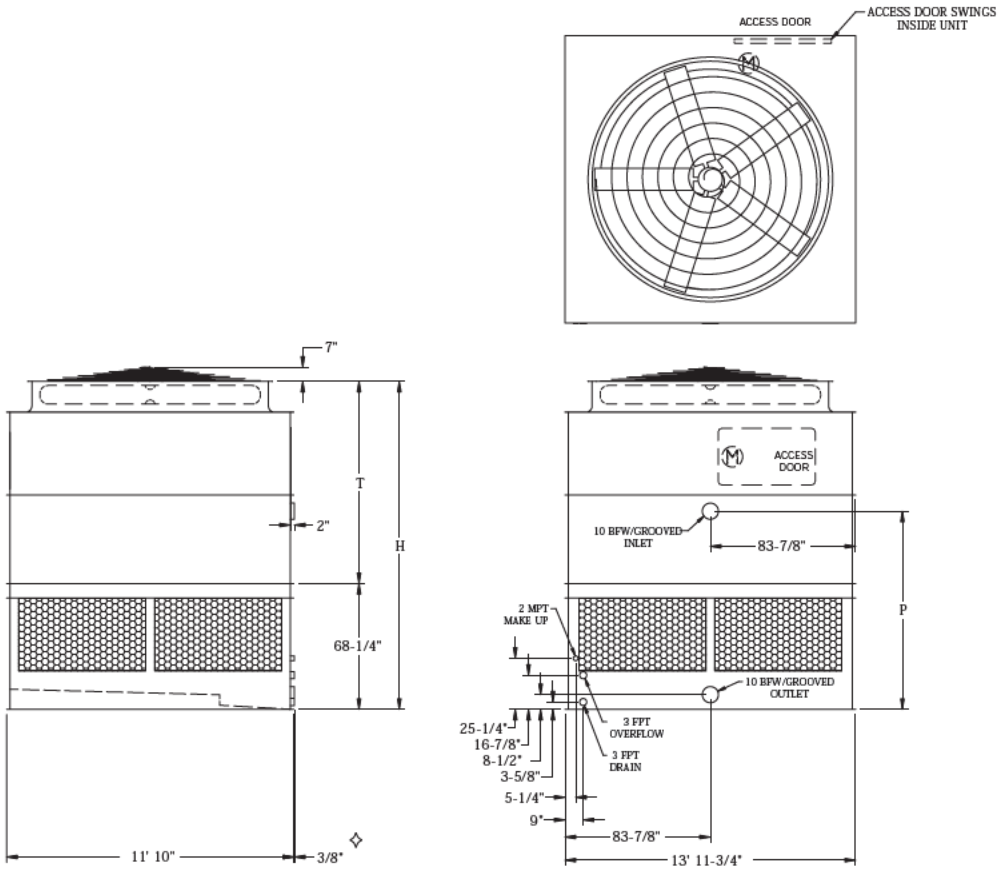

Model No.	Nominal Tonnage	WEIGHTS (LBS)			Fan Motor (HP)	Air Flow (CFM)	DIMENSIONS		
		Shipping	Operating	Heaviest Section✦			H†	T†	P
AT 112-2I14	299	8,230	15,560	5,360	10	77,800	14' 1/4"	8' 4"	8' 7"
AT 112-2J14	359	8,300	15,630	5,430	15	88,500	14' 1/4"	8' 4"	8' 7"
AT 112-2K14	394	8,360	15,690	5,490	20	97,000	14' 1/4"	8' 4"	8' 7"
AT 112-2L14	425	8,420	15,750	5,550	25	104,100	14' 1/4"	8' 4"	8' 7"
AT 112-2M14	450	8,490	15,820	5,620	30	110,400	14' 1/4"	8' 4"	8' 7"
AT 112-3I14	344	8,890	16,220	6,020	10	76,600	15' 1/4"	9' 4"	9' 7"
AT 112-3J14	405	8,960	16,290	6,090	15	87,000	15' 1/4"	9' 4"	9' 7"
AT 112-3K14	439	9,020	16,350	6,150	20	95,400	15' 1/4"	9' 4"	9' 7"
AT 112-3L14	471	9,080	16,410	6,210	25	102,300	15' 1/4"	9' 4"	9' 7"
AT 112-3M14	501	9,150	16,480	6,280	30	108,300	15' 1/4"	9' 4"	9' 7"
AT 112-3N14	548	9,410	16,740	6,540	40	118,600	15' 1/4"	9' 4"	9' 7"
AT 112-4I14	370	9,410	16,740	6,540	10	75,300	16' 1/4"	10' 4"	10' 7"
AT 112-4J14	427	9,480	16,810	6,610	15	85,600	16' 1/4"	10' 4"	10' 7"
AT 112-4K14	460	9,540	16,870	6,670	20	93,800	16' 1/4"	10' 4"	10' 7"
AT 112-4L14	494	9,600	16,930	6,730	25	100,600	16' 1/4"	10' 4"	10' 7"
AT 112-4M14	524	9,670	17,000	6,800	30	106,500	16' 1/4"	10' 4"	10' 7"
AT 112-4N14	574	9,930	17,260	7,060	40	116,500	16' 1/4"	10' 4"	10' 7"
SLSF Addition		1,200	1,200	1,200			1' 9-1/2"	1' 9-1/2"	

NOTE: (1) An adequately sized bleed line must be installed in the cooling tower system to prevent build-up of impurities in the recirculated water.
(2) Do not use catalog drawings for certified prints. Dimensions and weights are subject to change.
(3) Adequate spacing must be allowed for access to the cooling tower. Refer to EVAPCO's Equipment Layout Manual.
(4) Nominal Tonnage is based on 3 gpm per ton at 95 degree entering water temperature, 85 degree leaving water temperature, and 78 degree wet-bulb temperature.

✧ Outlet connection extends beyond bottom flange.
† Height includes fan guard which ships factory mounted.
✦ Heaviest section is upper section.

Models: AT/UT/USS 212-2128 to 212-4N28

Two-Cell Cooling Towers

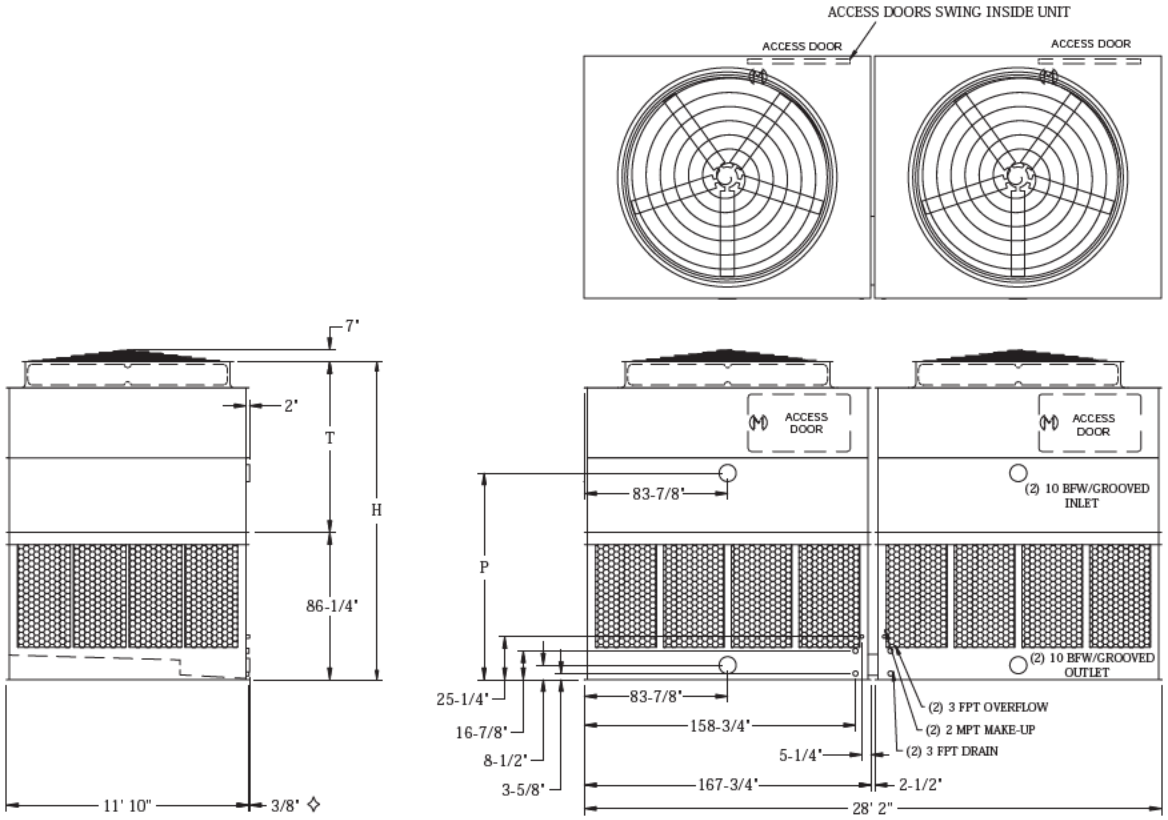

Model No.	Nominal Tonnage	WEIGHTS (LBS)			Fan Motor (HP)	Air Flow (CFM)	DIMENSIONS		
		Shipping	Operating	Heaviest Section✦			H†	T†	P
AT 212-2I28	598	16,820	31,480	5,360	(2) 10	155,600	15' 6-1/4"	8' 4"	10' 1"
AT 212-2J28	717	16,960	31,620	5,430	(2) 15	176,900	15' 6-1/4"	8' 4"	10' 1"
AT 212-2K28	787	17,080	31,740	5,490	(2) 20	194,000	15' 6-1/4"	8' 4"	10' 1"
AT 212-2L28	850	17,200	31,860	5,550	(2) 25	208,200	15' 6-1/4"	8' 4"	10' 1"
AT 212-2M28	900	17,340	32,000	5,620	(2) 30	220,700	15' 6-1/4"	8' 4"	10' 1"
AT 212-3I28	687	18,140	32,800	6,020	(2) 10	153,200	16' 6-1/4"	9' 4"	11' 1"
AT 212-3J28	810	18,280	32,940	6,090	(2) 15	174,000	16' 6-1/4"	9' 4"	11' 1"
AT 212-3K28	877	18,400	33,060	6,150	(2) 20	190,700	16' 6-1/4"	9' 4"	11' 1"
AT 212-3L28	942	18,520	33,180	6,210	(2) 25	204,500	16' 6-1/4"	9' 4"	11' 1"
AT 212-3M28	1,002	18,660	33,320	6,280	(2) 30	216,500	16' 6-1/4"	9' 4"	11' 1"
AT 212-3N28	1,097	19,180	33,840	6,540	(2) 40	237,100	16' 6-1/4"	9' 4"	11' 1"
AT 212-4I28	741	19,180	33,840	6,540	(2) 10	150,600	17' 6-1/4"	10' 4"	12' 1"
AT 212-4J28	853	19,320	33,980	6,610	(2) 15	171,200	17' 6-1/4"	10' 4"	12' 1"
AT 212-4K28	921	19,440	34,100	6,670	(2) 20	187,600	17' 6-1/4"	10' 4"	12' 1"
AT 212-4L28	987	19,560	34,220	6,730	(2) 25	201,200	17' 6-1/4"	10' 4"	12' 1"
AT 212-4M28	1,049	19,700	34,360	6,800	(2) 30	213,000	17' 6-1/4"	10' 4"	12' 1"
AT 212-4N28	1,147	20,220	34,880	7,060	(2) 40	232,900	17' 6-1/4"	10' 4"	12' 1"
SLSF Addition		2,400	2,400	1,200			1' 9-1/2"	1' 9-1/2"	

NOTE: (1) An adequately sized bleed line must be installed in the cooling tower system to prevent build-up of impurities in the recirculated water.
(2) Do not use catalog drawings for certified prints. Dimensions and weights are subject to change.
(3) Adequate spacing must be allowed for access to the cooling tower. Refer to EVAPCO's Equipment Layout Manual.
(4) Nominal Tonnage is based on 3 gpm per ton at 95 degree entering water temperature, 85 degree leaving water temperature, and 78 degree wet-bulb temperature.

✧ Outlet connection extends beyond bottom flange.
✦ Heaviest section is upper section.
† Height includes fan guard which ships factory mounted.

Models: AT/UT/USS 312-2142 to 312-4N42

Three-Cell Cooling Towers

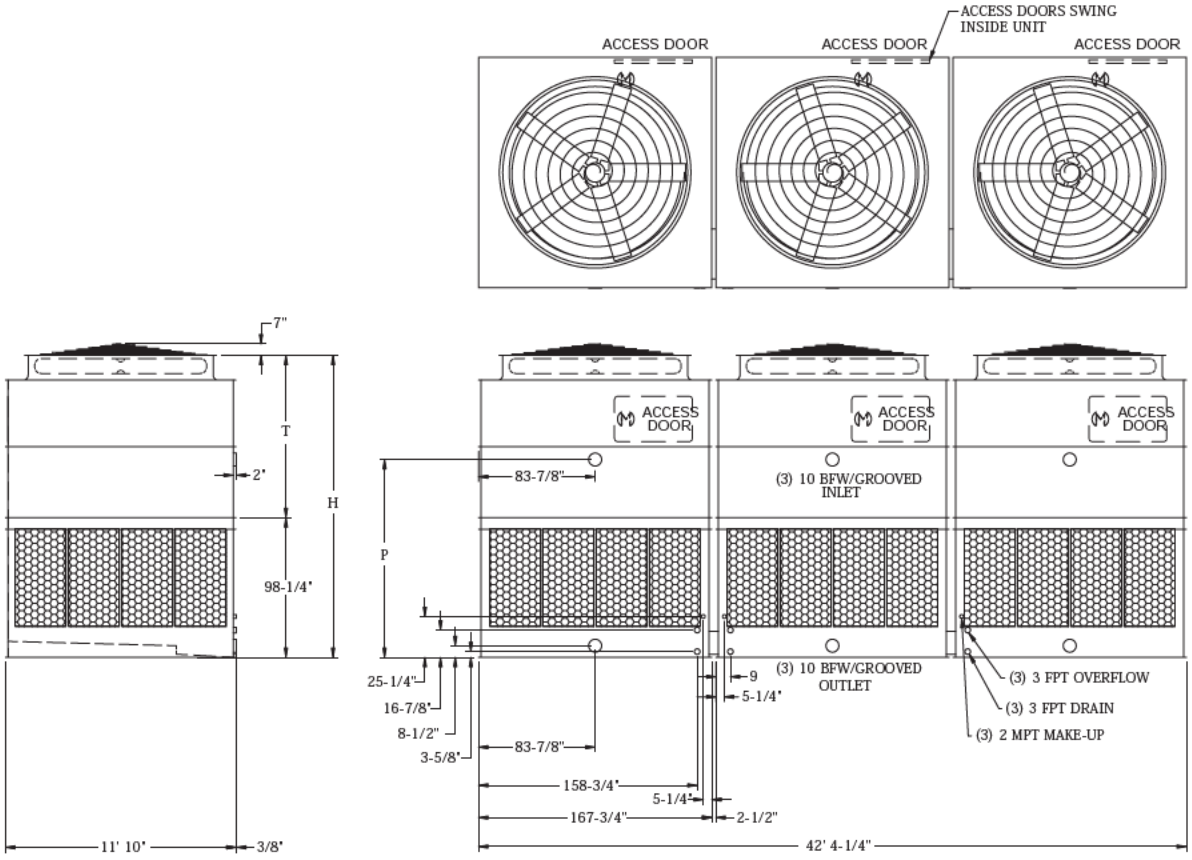

Model No.	Nominal Tonnage	WEIGHTS (LBS)			Fan Motor (HP)	Air Flow (CFM)	DIMENSIONS		
		Shipping	Operating	Heaviest Section✦			H†	T†	P
AT 312-2I42	910	25,560	47,550	5,360	(3) 10	235,500	16' 6-1/4"	8' 4"	11' 1"
AT 312-2J42	1,091	25,770	47,760	5,430	(3) 15	267,800	16' 6-1/4"	8' 4"	11' 1"
AT 312-2K42	1,195	25,950	47,940	5,490	(3) 20	293,600	16' 6-1/4"	8' 4"	11' 1"
AT 312-2L42	1,289	26,130	48,120	5,550	(3) 25	315,200	16' 6-1/4"	8' 4"	11' 1"
AT 312-2M42	1,366	26,340	48,330	5,620	(3) 30	334,000	16' 6-1/4"	8' 4"	11' 1"
AT 312-3I42	1,045	27,540	49,530	6,020	(3) 10	231,900	17' 6-1/4"	9' 4"	12' 1"
AT 312-3J42	1,229	27,750	49,740	6,090	(3) 15	263,400	17' 6-1/4"	9' 4"	12' 1"
AT 312-3K42	1,330	27,930	49,920	6,150	(3) 20	288,500	17' 6-1/4"	9' 4"	12' 1"
AT 312-3L42	1,428	28,110	50,100	6,210	(3) 25	309,500	17' 6-1/4"	9' 4"	12' 1"
AT 312-3M42	1,519	28,320	50,310	6,280	(3) 30	327,600	17' 6-1/4"	9' 4"	12' 1"
AT 312-3N42	1,662	29,100	51,090	6,540	(3) 40	358,900	17' 6-1/4"	9' 4"	12' 1"
AT 312-4I42	1,123	29,100	51,090	6,540	(3) 10	227,900	18' 6-1/4"	10' 4"	13' 1"
AT 312-4J42	1,293	29,310	51,300	6,610	(3) 15	259,100	18' 6-1/4"	10' 4"	13' 1"
AT 312-4K42	1,395	29,490	51,480	6,670	(3) 20	284,000	18' 6-1/4"	10' 4"	13' 1"
AT 312-4L42	1,495	29,670	51,660	6,730	(3) 25	304,600	18' 6-1/4"	10' 4"	13' 1"
AT 312-4M42	1,589	29,880	51,870	6,800	(3) 30	322,400	18' 6-1/4"	10' 4"	13' 1"
AT 312-4N42	1,738	30,660	52,650	7,060	(3) 40	352,500	18' 6-1/4"	10' 4"	13' 1"
SLSF Addition		2,400	2,400	1,200			1' 9-1/2"	1' 9-1/2"	

NOTE: (1) An adequately sized bleed line must be installed in the cooling tower system to prevent build-up of impurities in the recirculated water.
(2) Do not use catalog drawings for certified prints. Dimensions and weights are subject to change.
(3) Adequate spacing must be allowed for access to the cooling tower. Refer to EVAPCO's Equipment Layout Manual.
(4) Nominal Tonnage is based on 3 gpm per ton at 95 degree entering water temperature, 85 degree leaving water temperature, and 78 degree wet-bulb temperature.

✧ Outlet connection extends beyond bottom flange.
† Height includes fan guard which ships factory mounted.
✦ Heaviest section is upper section.

Models: AT/UT/USS 424-2128 to 424-4N28

Four-Cell Cooling Towers

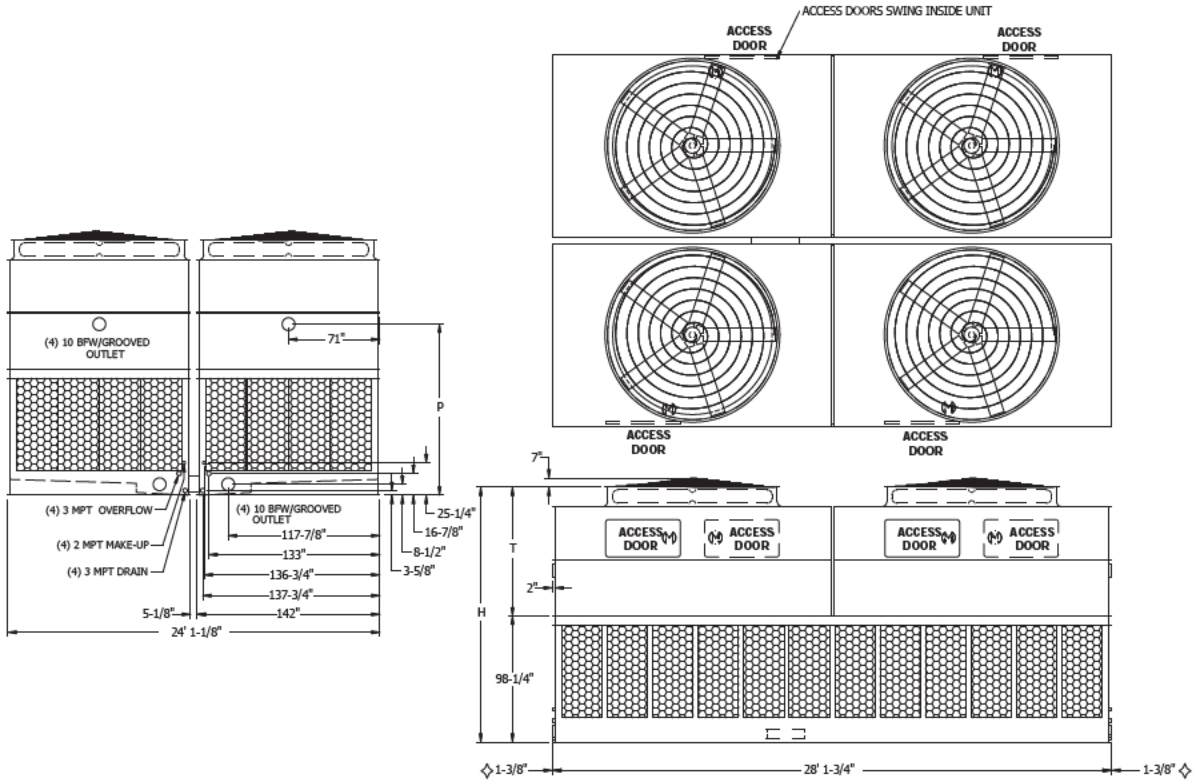

Model No.	Nominal Tonnage	WEIGHTS (LBS)			Fan Motor (HP)	Air Flow (CFM)	DIMENSIONS		
		Shipping	Operating	Heaviest Section✦			H†	T†	P
AT 424-2I28	1,159	34,260	63,160	6,550	(4) 10	299,400	16' 6-1/4"	8' 4"	11' 1"
AT 424-2J28	1,405	34,820	63,720	6,550	(4) 15	340,300	16' 6-1/4"	8' 4"	11' 1"
AT 424-2K28	1,564	35,060	63,960	6,550	(4) 20	372,900	16' 6-1/4"	8' 4"	11' 1"
AT 424-2L28	1,689	35,300	64,200	6,550	(4) 25	400,300	16' 6-1/4"	8' 4"	11' 1"
AT 424-2M28	1,838	35,580	64,480	6,550	(4) 30	423,700	16' 6-1/4"	8' 4"	11' 1"
AT 424-3I28	1,322	36,900	65,800	6,550	(4) 10	294,900	17' 6-1/4"	9' 4"	12' 1"
AT 424-3J28	1,563	37,460	66,360	6,550	(4) 15	335,100	17' 6-1/4"	9' 4"	12' 1"
AT 424-3K28	1,745	37,700	66,600	6,550	(4) 20	366,600	17' 6-1/4"	9' 4"	12' 1"
AT 424-3L28	1,873	37,940	66,840	6,550	(4) 25	393,200	17' 6-1/4"	9' 4"	12' 1"
AT 424-3M28	1,993	38,220	67,120	6,550	(4) 30	416,200	17 6-1/4"	9' 4"	12' 1"
AT 424-3N28	2,199	39,260	68,160	6,550	(4) 40	455,600	17 6-1/4"	9' 4"	12' 1"
AT 424-4I28	1,434	38,980	67,880	6,550	(4) 10	289,800	18' 6-1/4"	10' 4"	13' 1"
AT 424-4J28	1,654	39,540	68,440	6,610	(4) 15	329,600	18' 6-1/4"	10' 4"	13' 1"
AT 424-4K28	1,833	39,780	68,680	6,670	(4) 20	360,700	18' 6-1/4"	10' 4"	13' 1"
AT 424-4L28	1,965	40,020	68,920	6,730	(4) 25	386,900	18' 6-1/4"	10' 4"	13' 1"
AT 424-4M28	2,088	40,300	69,200	6,800	(4) 30	409,600	18' 6-1/4"	10' 4"	13' 1"
AT 424-4N28	2,283	41,340	70,240	7,060	(4) 40	447,900	18' 6-1/4"	10' 4"	13' 1"
SLSF Addition		4,800	4,800	1,200			1' 9-1/2"	1' 9-1/2"	

NOTE: (1) An adequately sized bleed line must be installed in the cooling tower system to prevent build-up of impurities in the recirculated water.
(2) Do not use catalog drawings for certified prints. Dimensions and weights are subject to change.
(3) Adequate spacing must be allowed for access to the cooling tower. Refer to EVAPCO's Equipment Layout Manual.
(4) Nominal Tonnage is based on 3 gpm per ton at 95 degree entering water temperature, 85 degree leaving water temperature, and 78 degree wet-bulb temperature.

✧ Outlet connection extends beyond bottom flange.
† Height includes fan guard which ships factory mounted.
✦ L=Lower Section, U=Upper Section

Models: AT/UT/USS 112-2J18 to 112-4P18

One-Cell Cooling Towers

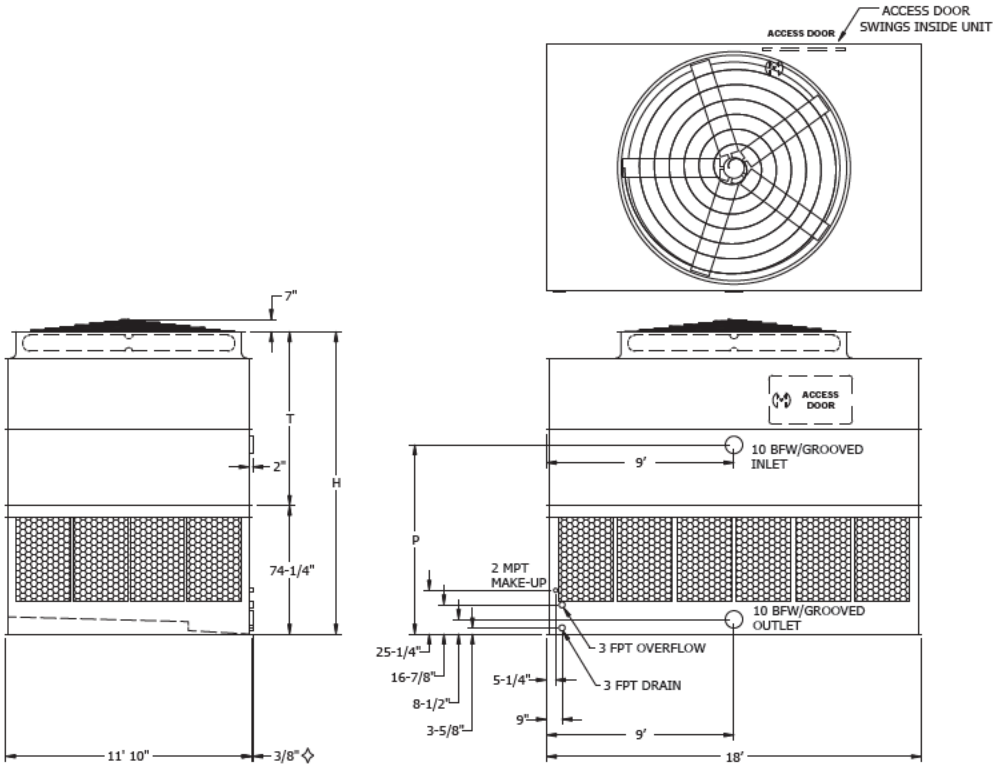

Model No.	Nominal Tonnage	WEIGHTS (LBS)			Fan Motor (HP)	Air Flow (CFM)	DIMENSIONS		
		Shipping	Operating	Heaviest Section✦			H†	T†	P
AT 112-2J18	439	10,600	19,870	6,700	15	110,100	14' 6-1/4"	8' 4"	9' 1"
AT 112-2K18	497	10,660	19,930	6,760	20	120,600	14' 6-1/4"	8' 4"	9' 1"
AT 112-2L18	525	10,710	19,980	6,810	25	129,600	14' 6-1/4"	8' 4"	9' 1"
AT 112-2M18	554	10,820	20,090	6,920	30	137,400	14' 6-1/4"	8' 4"	9' 1"
AT 112-2N18	610	11,080	20,350	7,180	40	150,500	14' 6-1/4"	8' 4"	9' 1"
AT 112-3J18	488	11,380	20,650	7,480	15	108,500	15' 6-1/4"	9' 4"	10' 1"
AT 112-3K18	546	11,440	20,710	7,540	20	118,700	15' 6-1/4"	9' 4"	10' 1"
AT 112-3L18	581	11,490	20,760	7,590	25	127,400	15' 6-1/4"	9' 4"	10' 1"
AT 112-3M18	614	11,600	20,870	7,700	30	134,900	15' 6-1/4"	9' 4"	10' 1"
AT 112-3N18	675	11,860	21,130	7,960	40	147,600	15' 6-1/4"	9' 4"	10' 1"
AT 112-3O18	724	11,920	21,190	8,020	50	158,500	15' 6-1/4"	9' 4"	10' 1"
AT 112-4J18	518	12,120	21,390	8,220	15	106,700	16' 6-1/4"	10' 4"	11' 1"
AT 112-4K18	572	12,180	21,450	8,280	20	116,800	16' 6-1/4"	10' 4"	11' 1"
AT 112-4L18	606	12,230	21,500	8,330	25	125,400	16' 6-1/4"	10' 4"	11' 1"
AT 112-4M18	642	12,340	21,610	8,440	30	132,800	16' 6-1/4"	10' 4"	11' 1"
AT 112-4N18	705	12,600	21,870	8,700	40	145,200	16' 6-1/4"	10' 4"	11' 1"
AT 112-4O18	757	12,660	21,930	8,760	50	155,600	16' 6-1/4"	10' 4"	11' 1"
AT 112-4P18	785	12,770	22,040	8,870	60	164,900	16' 6-1/4"	10' 4"	11' 1"
SLSF Addition		1,200	1,200	1,200			1' 3-1/2"	1' 3-1/2"	

NOTE: (1) An adequately sized bleed line must be installed in the cooling tower system to prevent build-up of impurities in the recirculated water.
(2) Do not use catalog drawings for certified prints. Dimensions and weights are subject to change.
(3) Adequate spacing must be allowed for access to the cooling tower. Refer to EVAPCO's Equipment Layout Manual.
(4) Nominal Tonnage is based on 3 gpm per ton at 95 degree entering water temperature, 85 degree leaving water temperature, and 78 degree wet-bulb temperature.
(5) This box size is available in a dual fan/cell configuration.

✧ Outlet connection extends beyond bottom flange.
† Height includes fan guard which ships factory mounted.
✦ Heaviest section is upper section.

Models: AT/UT/USS 224-2J18 to 224-4P18

Two-Cell Cooling Towers

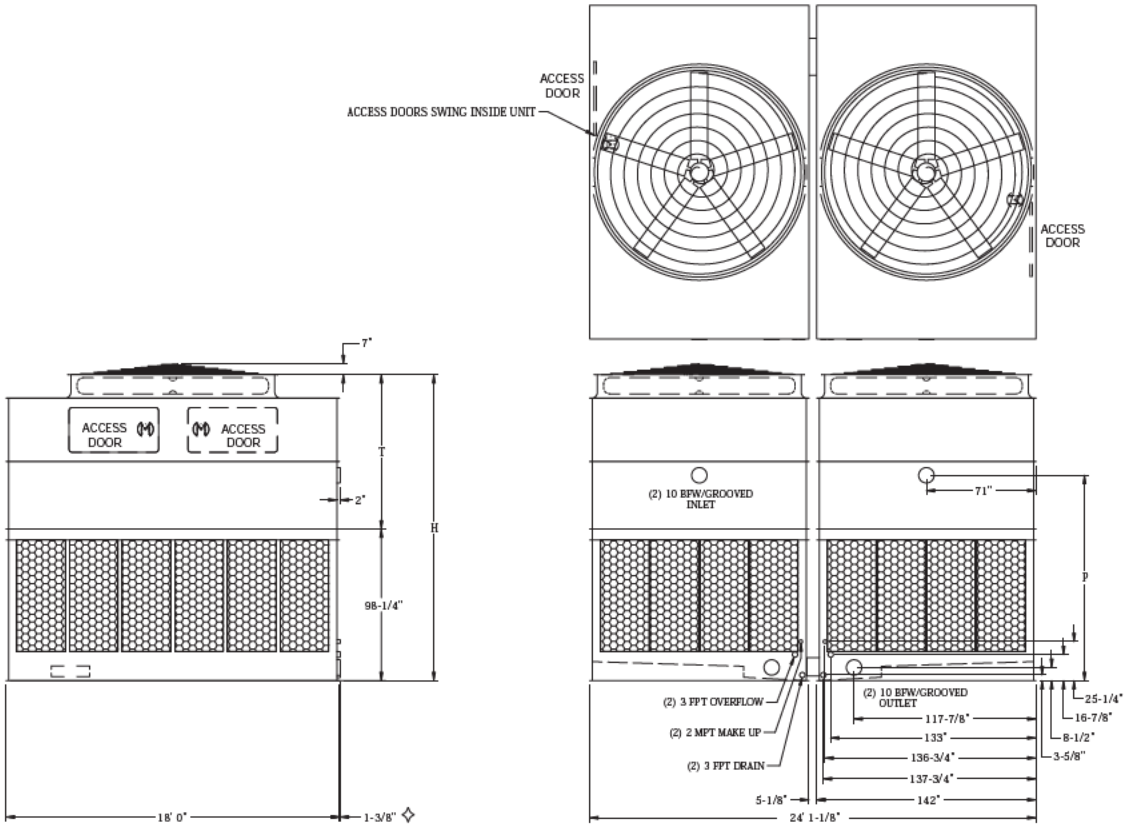

Model No.	Nominal Tonnage	WEIGHTS (LBS)			Fan Motor (HP)	Air Flow (CFM)	DIMENSIONS		
		Shipping	Operating	Heaviest Section✦			H†	T†	P
AT 224-2J18	877	22,160	40,700	6,700	(2) 15	219,400	16' 6-1/4"	8' 4"	11' 1"
AT 224-2K18	994	22,280	40,820	6,760	(2) 20	240,300	16' 6-1/4"	8' 4"	11' 1"
AT 224-2L18	1,051	22,380	40,920	6,810	(2) 25	258,200	16' 6-1/4"	8' 4"	11' 1"
AT 224-2M18	1,107	22,600	41,140	6,920	(2) 30	273,700	16' 6-1/4"	8' 4"	11' 1"
AT 224-2N18	1,219	23,120	41,660	7,180	(2) 40	299,800	16' 6-1/4"	8' 4"	11' 1"
AT 224-3J18	977	23,720	42,260	7,480	(2) 15	216,100	17' 6-1/4"	9' 4"	12' 1"
AT 224-3K18	1,092	23,840	42,380	7,540	(2) 20	236,500	17' 6-1/4"	9' 4"	12' 1"
AT 224-3L18	1,161	23,940	42,480	7,590	(2) 25	253,800	17' 6-1/4"	9' 4"	12' 1"
AT 224-3M18	1,227	24,160	42,700	7,700	(2) 30	268,800	17' 6-1/4"	9' 4"	12' 1"
AT 224-3N18	1,350	24,680	43,220	7,960	(2) 40	294,100	17' 6-1/4"	9' 4"	12' 1"
AT 224-3O18	1,448	24,800	43,340	8,020	(2) 50	315,700	17' 6-1/4"	9' 4"	12' 1"
AT 224-4J18	1,035	25,200	43,740	8,220	(2) 15	212,500	18' 6-1/4"	10' 4"	13' 1"
AT 224-4K18	1,145	25,320	43,860	8,280	(2) 20	232,700	18' 6-1/4"	10' 4"	13' 1"
AT 224-4L18	1,213	25,420	43,960	8,330	(2) 25	249,800	18' 6-1/4"	10' 4"	13' 1"
AT 224-4M18	1,283	25,640	44,180	8,440	(2) 30	264,500	18' 6-1/4"	10' 4"	13' 1"
AT 224-4N18	1,409	26,160	44,700	8,700	(2) 40	289,300	18' 6-1/4"	10' 4"	13' 1"
AT 224-4O18	1,513	26,280	44,820	8,760	(2) 50	310,000	18' 6-1/4"	10' 4"	13' 1"
AT 224-4P18	1,570	26,500	45,040	8,870	(2) 60	328,500	18' 6-1/4"	10' 4"	13' 1"
SLSF Addition		2,400	2,400	1,200			1' 3-1/2"	1' 3-1/2"	

NOTE: (1) An adequately sized bleed line must be installed in the cooling tower system to prevent build-up of impurities in the recirculated water.
(2) Do not use catalog drawings for certified prints. Dimensions and weights are subject to change.
(3) Adequate spacing must be allowed for access to the cooling tower. Refer to EVAPCO's Equipment Layout Manual.
(4) Nominal Tonnage is based on 3 gpm per ton at 95 degree entering water temperature, 85 degree leaving water temperature, and 78 degree wet-bulb temperature.
(5) This box size is available in a dual fan/cell configuration.

✧ Outlet connection extends beyond bottom flange.
† Height includes fan guard which ships factory mounted.
✦ Heaviest section is upper section.

Models: AT/UT/USS 212-2J36 to 212-4P36

Two-Cell Cooling Towers

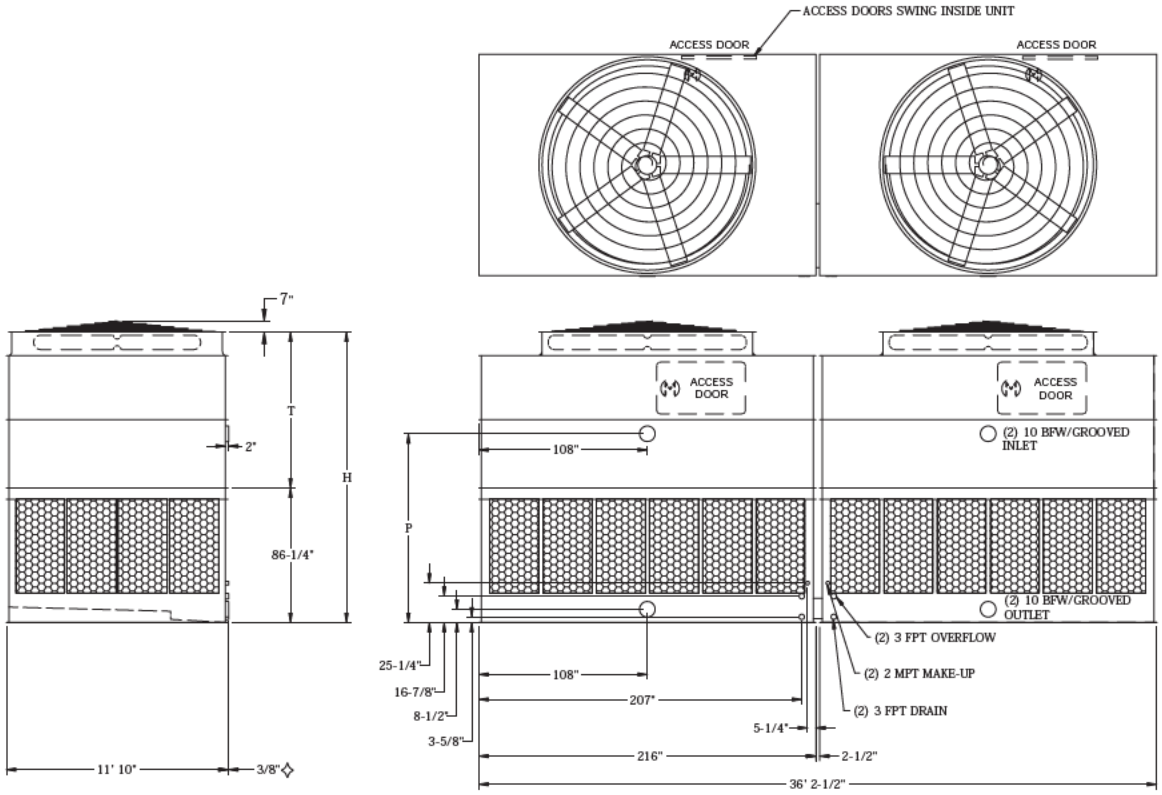

Model No.	Nominal Tonnage	WEIGHTS (LBS)			Fan Motor (HP)	Air Flow (CFM)	DIMENSIONS		
		Shipping	Operating	Heaviest Section✦			H†	T†	P
AT 212-2J36	877	21,460	40,000	6,700	(2) 15	220,200	15' 6-1/4"	8' 4"	10' 1"
AT 212-2K36	994	21,580	40,120	6,760	(2) 20	241,200	15' 6-1/4"	8' 4"	10' 1"
AT 212-2L36	1,051	21,680	40,220	6,810	(2) 25	259,200	15' 6-1/4"	8' 4"	10' 1"
AT 212-2M36	1,107	21,900	40,440	6,920	(2) 30	274,700	15' 6-1/4"	8' 4"	10' 1"
AT 212-2N36	1,219	22,420	40,960	7,180	(2) 40	300,900	15' 6-1/4"	8' 4"	10' 1"
AT 212-3J36	977	23,020	41,560	7,480	(2) 15	216,900	16' 6-1/4"	9' 4"	11' 1"
AT 212-3K36	1,092	23,140	41,680	7,540	(2) 20	237,300	16' 6-1/4"	9' 4"	11' 1"
AT 212-3L36	1,161	23,240	41,780	7,590	(2) 40	254,700	16' 6-1/4"	9' 4"	11' 1"
AT 212-3M36	1,227	23,460	42,000	7,700	(2) 50	269,800	16' 6-1/4"	9' 4"	11' 1"
AT 212-3N36	1,350	23,980	42,520	7,960	(2) 30	295,200	16' 6-1/4"	9' 4"	11' 1"
AT 212-3O36	1,448	24,100	42,640	8,020	(2) 25	316,900	16' 6-1/4"	9' 4"	11' 1"
AT 212-4J36	1,035	24,500	43,040	8,220	(2) 15	213,300	17' 6-1/4"	10' 4"	12' 1"
AT 212-4K36	1,145	24,620	43,160	8,280	(2) 20	233,600	17' 6-1/4"	10' 4"	12' 1"
AT 212-4L36	1,213	24,720	43,260	8,330	(2) 25	250,800	17' 6-1/4"	10' 4"	12' 1"
AT 212-4M36	1,283	24,940	43,480	8,440	(2) 30	265,500	17' 6-1/4"	10' 4"	12' 1"
AT 212-4N36	1,409	25,460	44,000	8,700	(2) 40	290,400	17' 6-1/4"	10' 4"	12' 1"
AT 212-4O36	1,513	25,580	44,120	8,760	(2) 50	311,200	17' 6-1/4"	10' 4"	12' 1"
AT 212-4P36	1,570	25,800	44,340	8,870	(2) 60	329,700	17' 6-1/4"	10' 4"	12' 1"
SLSF Addition		2,400	2,400	1,200			1' 3-1/2"	1' 3-1/2"	

NOTE: (1) An adequately sized bleed line must be installed in the cooling tower system to prevent build-up of impurities in the recirculated water.
(2) Do not use catalog drawings for certified prints. Dimensions and weights are subject to change.
(3) Adequate spacing must be allowed for access to the cooling tower. Refer to EVAPCO's Equipment Layout Manual.
(4) Nominal Tonnage is based on 3 gpm per ton at 95 degree entering water temperature, 85 degree leaving water temperature, and 78 degree wet-bulb temperature.
(5) This box size is available in a dual fan/cell configuration.

◇ Outlet connection extends beyond bottom flange.
† Height includes fan guard which ships factory mounted.
✦ Heaviest section is upper section.

Models: AT/UT/USS 312-2J54 to 312-4P54

Three-Cell Cooling Towers

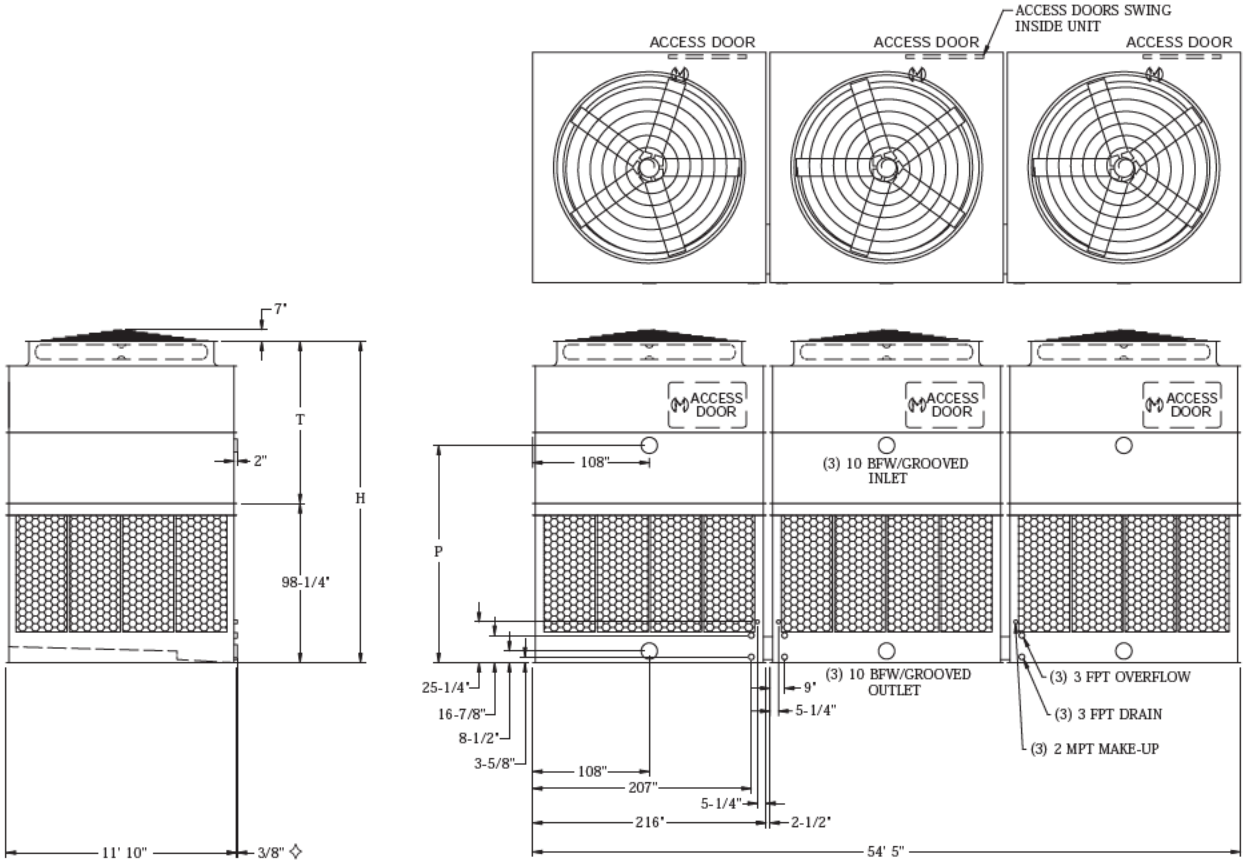

Model No.	Nominal Tonnage	WEIGHTS (LBS)			Fan Motor (HP)	Air Flow (CFM)	DIMENSIONS		
		Shipping	Operating	Heaviest Section✦			H†	T†	P
AT 312-2J54	1,324	32,640	60,450	6,700	(3) 15	330,500	16' 6-1/4"	8' 4"	11' 1"
AT 312-2K54	1,499	32,820	60,630	6,760	(3) 20	362,000	16' 6-1/4"	8' 4"	11' 1"
AT 312-2L54	1,586	32,970	60,780	6,810	(3) 25	389,000	16' 6-1/4"	8' 4"	11' 1"
AT 312-2M54	1,670	33,300	61,110	6,920	(3) 30	412,300	16' 6-1/4"	8' 4"	11' 1"
AT 312-2N54	1,840	34,080	61,890	7,180	(3) 40	451,700	16' 6-1/4"	8' 4"	11' 1"
AT 312-3J54	1,473	34,980	62,790	7,480	(3) 15	325,600	17' 6-1/4"	9' 4"	12' 1"
AT 312-3K54	1,648	35,160	62,970	7,540	(3) 20	356,200	17' 6-1/4"	9' 4"	12' 1"
AT 312-3L54	1,752	35,310	63,120	7,590	(3) 25	382,300	17' 6-1/4"	9' 4"	12' 1"
AT 312-3M54	1,851	35,640	63,450	7,700	(3) 30	404,900	17' 6-1/4"	9' 4"	12' 1"
AT 312-3N54	2,036	36,420	64,230	7,960	(3) 40	443,100	17' 6-1/4"	9' 4"	12' 1"
AT 312-3O54	2,182	36,600	64,410	8,020	(3) 50	475,700	17' 6-1/4"	9' 4"	12' 1"
AT 312-4J54	1,560	37,200	65,010	8,220	(3) 15	320,200	18' 6-1/4"	10' 4"	13' 1"
AT 312-4K54	1,725	37,380	65,190	8,280	(3) 20	350,500	18' 6-1/4"	10' 4"	13' 1"
AT 312-4L54	1,828	37,530	65,340	8,330	(3) 25	376,300	18' 6-1/4"	10' 4"	13' 1"
AT 312-4M54	1,935	37,860	65,670	8,440	(3) 30	398,500	18' 6-1/4"	10' 4"	13' 1"
AT 312-4N54	2,124	38,640	66,450	8,700	(3) 40	435,800	18' 6-1/4"	10' 4"	13' 1"
AT 312-4O54	2,281	38,820	66,630	8,760	(3) 50	467,000	18' 6-1/4"	10' 4"	13' 1"
AT 312-4P54	2,367	39,150	66,960	8,870	(3) 60	494,700	18' 6-1/4"	10' 4"	13' 1"
SLSF Addition		3,600	3,600	1,200			1' 3-1/2"	1' 3-1/2"	

NOTE: (1) An adequately sized bleed line must be installed in the cooling tower system to prevent build-up of impurities in the recirculated water.
(2) Do not use catalog drawings for certified prints. Dimensions and weights are subject to change.
(3) Adequate spacing must be allowed for access to the cooling tower. Refer to EVAPCO's Equipment Layout Manual.
(4) Nominal Tonnage is based on 3 gpm per ton at 95 degree entering water temperature, 85 degree leaving water temperature, and 78 degree wet-bulb temperature.
(5) This box size is available in a dual fan/cell configuration.

✧ Outlet connection extends beyond bottom flange.
† Height includes fan guard which ships factory mounted.
✦ Heaviest section is upper section.

Models: AT/UT/USS 424-2J36 to 424-4P36

Four-Cell Cooling Towers

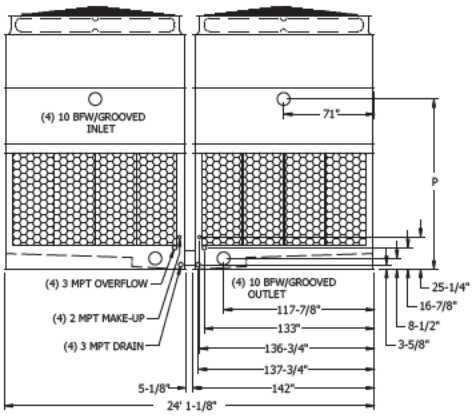

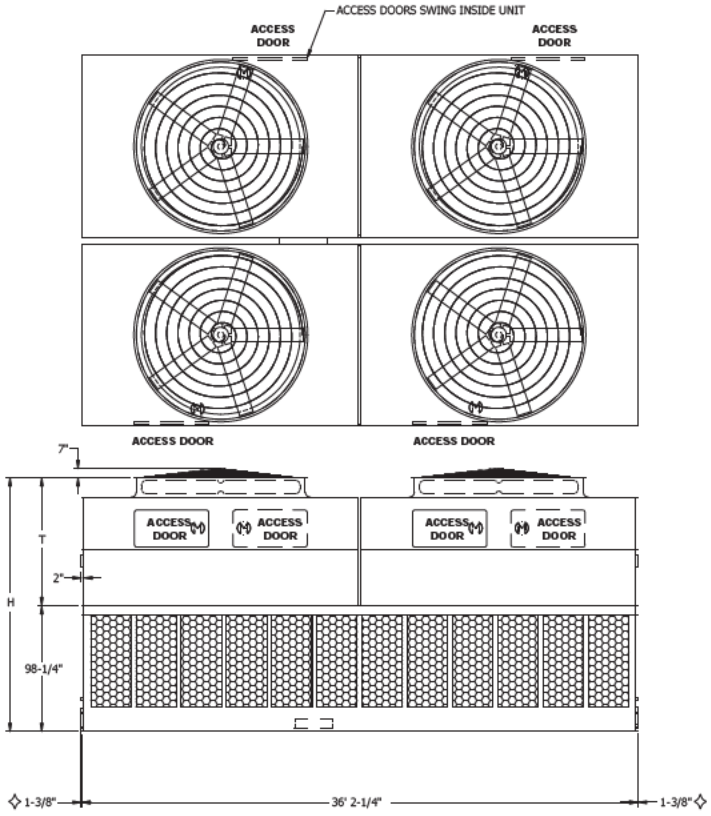

Model No.	Nominal Tonnage	WEIGHTS (LBS)			Fan Motor (HP)	Air Flow (CFM)	DIMENSIONS		
		Shipping	Operating	Heaviest Section✦			H†	T†	P
AT 424-2J36	1,687	43,840	80,540	8,520	(4) 15	423,100	16' 6-1/4"	8' 4"	11' 1"
AT 424-2K36	1,914	44,080	80,780	8,520	(4) 20	463,300	16' 6-1/4"	8' 4"	11' 1"
AT 424-2L36	2,023	44,280	80,980	8,520	(4) 25	498,000	16' 6-1/4"	8' 4"	11' 1"
AT 424-2M36	2,133	44,720	81,420	8,520	(4) 30	527,900	16' 6-1/4"	8' 4"	11' 1"
AT 424-2N36	2,350	45,760	82,460	8,520	(4) 40	578,400	16' 6-1/4"	8' 4"	11' 1"
AT 424-3J36	1,883	46,960	83,660	8,520	(4) 15	416,900	17' 6-1/4"	9' 4"	12' 1"
AT 424-3K36	2,108	47,200	83,900	8,520	(4) 20	456,200	17' 6-1/4"	9' 4"	12' 1"
AT 424-3L36	2,246	47,400	84,100	8,520	(4) 25	489,600	17' 6-1/4"	9' 4"	12' 1"
AT 424-3M36	2,373	47,840	84,540	8,520	(4) 30	518,600	17' 6-1/4"	9' 4"	12' 1"
AT 424-3N36	2,614	48,880	85,580	8,520	(4) 40	567,400	17' 6-1/4"	9' 4"	12' 1"
AT 424-3O36	2,806	49,120	85,820	8,520	(4) 50	608,800	17' 6-1/4"	9' 4"	12' 1"
AT 424-4J36	2,005	49,920	86,620	8,520	(4) 15	409,800	18' 6-1/4"	10' 4"	13' 1"
AT 424-4K36	2,221	50,160	86,860	8,520	(4) 20	448,800	18' 6-1/4"	10' 4"	13' 1"
AT 424-4L36	2,353	50,360	87,060	8,520	(4) 25	481,900	18' 6-1/4"	10' 4"	13' 1"
AT 424-4M36	2,491	50,800	87,500	8,520	(4) 30	510,300	18' 6-1/4"	10' 4"	13' 1"
AT 424-4N36	2,736	51,840	88,540	8,700	(4) 40	558,300	18' 6-1/4"	10' 4"	13' 1"
AT 424-4O36	2,938	52,080	88,780	8,760	(4) 50	598,300	18' 6-1/4"	10' 4"	13' 1"
AT 424-4P36	3,049	52,520	89,220	8,870	(4) 60	633,900	18' 6-1/4"	10' 4"	13' 1"
SLSF Addition		4,800	4,800	1,200			1' 3-1/2"	1' 3-1/2"	

NOTE: (1) An adequately sized bleed line must be installed in the cooling tower system to prevent build-up of impurities in the recirculated water.
(2) Do not use catalog drawings for certified prints. Dimensions and weights are subject to change.
(3) Adequate spacing must be allowed for access to the cooling tower. Refer to EVAPCO's Equipment Layout Manual.
(4) Nominal Tonnage is based on 3 gpm per ton at 95 degree entering water temperature, 85 degree leaving water temperature, and 78 degree wet-bulb temperature.
(5) This box size is available in a dual fan/cell configuration.

✧ Outlet connection extends beyond bottom flange.
† Height includes fan guard which ships factory mounted.
✦ L=Lower Section, U=Upper Section

Models: AT/UT/USS 112-2K20 to 112-4P20

One-Cell Cooling Towers

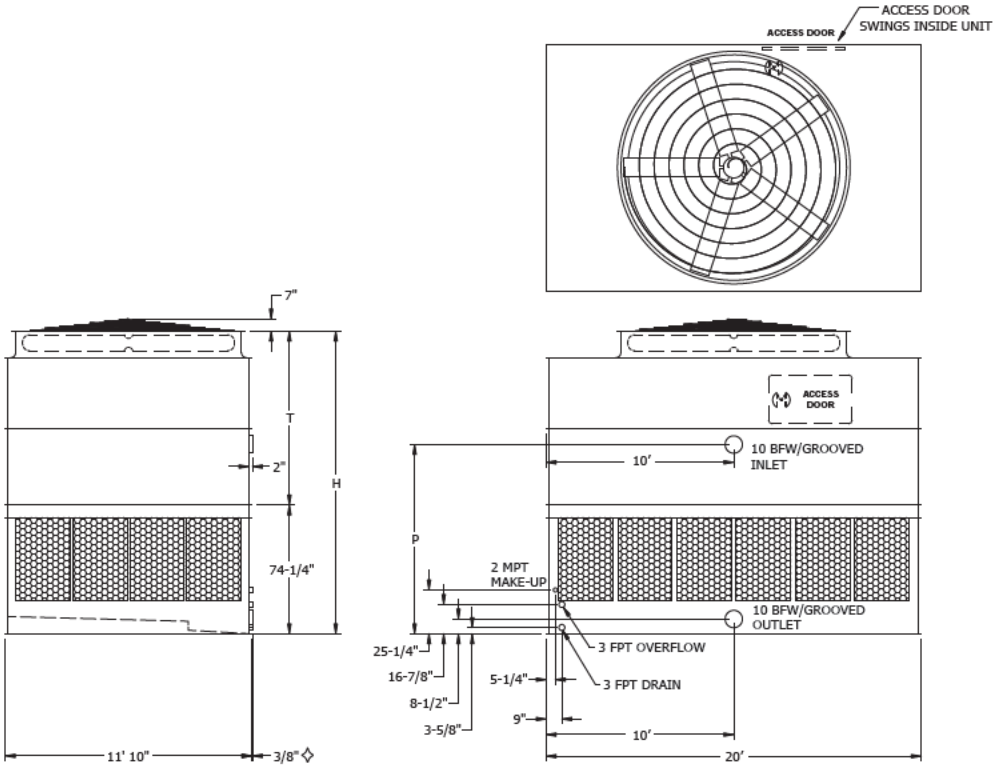

Model No.	Nominal Tonnage	WEIGHTS (LBS)			Fan Motor (HP)	Air Flow (CFM)	DIMENSIONS		
		Shipping	Operating	Heaviest Section✦			H†	T†	P
AT 112-2K20	459	11,320	21,720	7,210	20	123,900	14' 6 1/4"	8' 4"	9' 1"
AT 112-2L20	506	11,370	21,770	7,260	25	133,000	14' 6 1/4"	8' 4"	9' 1"
AT 112-2M20	544	11,480	21,880	7,370	30	140,900	14' 6 1/4"	8' 4"	9' 1"
AT 112-2N20	625	11,740	22,140	7,630	40	154,100	14' 6 1/4"	8' 4"	9' 1"
AT 112-2O20	679	11,800	22,200	7,690	50	165,300	14' 6 1/4"	8' 4"	9' 1"
AT 112-3K20	536	12,050	22,450	7,940	20	121,800	15' 6 1/4"	9' 4"	10' 1"
AT 112-3L20	585	12,100	22,500	7,990	25	130,700	15' 6 1/4"	9' 4"	10' 1"
AT 112-3M20	623	12,210	22,610	8,100	30	138,300	15' 6 1/4"	9' 4"	10' 1"
AT 112-3N20	698	12,470	22,870	8,360	40	151,200	15' 6 1/4"	9' 4"	10' 1"
AT 112-3O20	757	12,530	22,930	8,420	50	162,100	15' 6 1/4"	9' 4"	10' 1"
AT 112-4K20	572	12,950	23,350	8,840	20	119,800	16' 6 1/4"	10' 4"	11' 1"
AT 112-4L20	618	13,000	23,400	8,890	25	128,500	16' 6 1/4"	10' 4"	11' 1"
AT 112-4M20	655	13,110	23,510	9,000	30	136,100	16' 6 1/4"	10' 4"	11' 1"
AT 112-4N20	728	13,370	23,770	9,260	40	148,800	16' 6 1/4"	10' 4"	11' 1"
AT 112-4O20	788	13,430	23,830	9,320	50	159,500	16' 6 1/4"	10' 4"	11' 1"
AT 112-4P20	817	13,540	23,940	9,430	60	169,000	16' 6 1/4"	10' 4"	11' 1"
SLSF Addition		1,200	1,200	1,200			1' 3-1/2"	1' 3-1/2"	

NOTE: (1) An adequately sized bleed line must be installed in the cooling tower system to prevent build-up of impurities in the recirculated water.
(2) Do not use catalog drawings for certified prints. Dimensions and weights are subject to change.
(3) Adequate spacing must be allowed for access to the cooling tower. Refer to EVAPCO's Equipment Layout Manual.
(4) Nominal Tonnage is based on 3 gpm per ton at 95 degree entering water temperature, 85 degree leaving water temperature, and 78 degree wet-bulb temperature.
(5) This box size is available in a dual fan/cell configuration.

✧ Outlet connection extends beyond bottom flange.
✦ Heaviest section is upper section.
† Height includes fan guard which ships factory mounted.

Models: AT/UT/USS 224-2K20 to 224-4P20

Two-Cell Cooling Towers

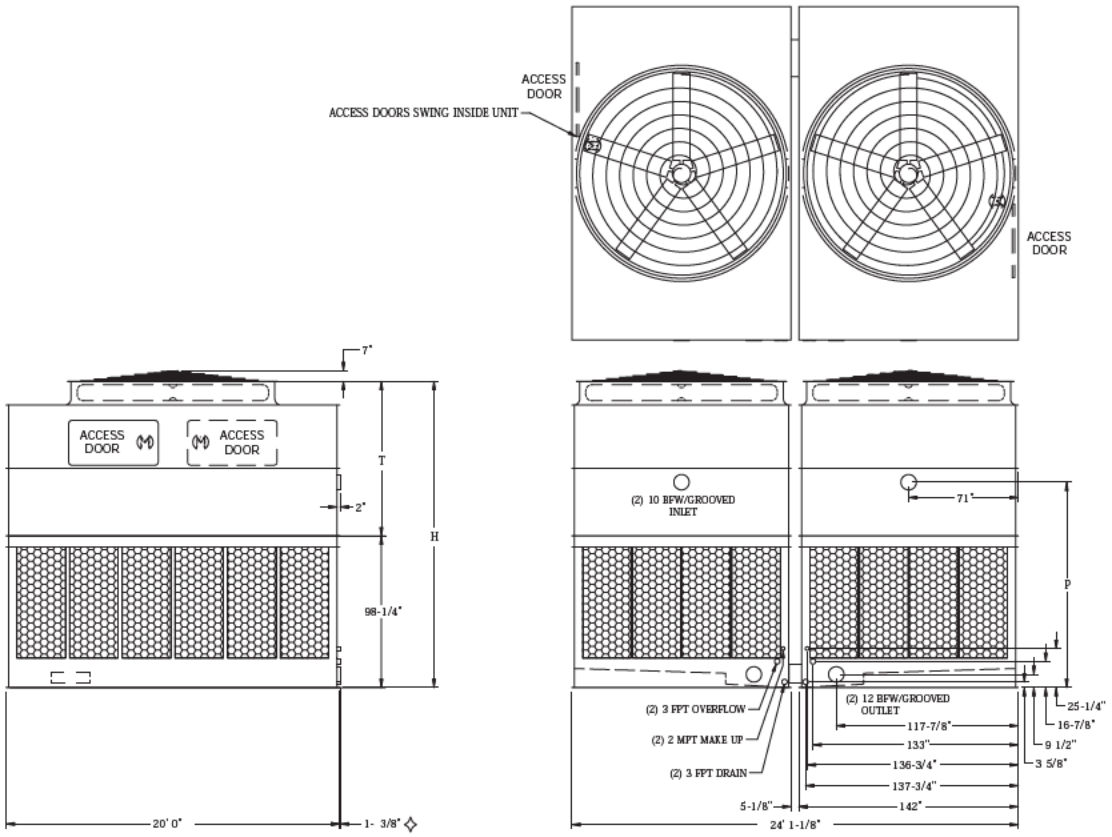

Model No.	Nominal Tonnage	Weights (LBS)			Fan Motor (HP)	Air Flow (CFM)	Dimensions		
		Shipping	Operating	Heaviest Section✦			H†	T†	P
AT 224-2K20	893	23,660	44,460	7,210	(2) 20	244,300	16' 6-1/4"	8' 4"	11' 1"
AT 224-2L20	986	23,760	44,560	7,260	(2) 25	262,200	16' 6-1/4"	8' 4"	11' 1"
AT 224-2M20	1,061	23,980	44,780	7,370	(2) 30	277,900	16' 6-1/4"	8' 4"	11' 1"
AT 224-2N20	1,220	24,500	45,300	7,630	(2) 40	304,000	16' 6-1/4"	8' 4"	11' 1"
AT 224-2O20	1,324	24,620	45,420	7,690	(2) 50	326,100	16' 6-1/4"	8' 4"	11' 1"
AT 224-3K20	1,046	25,120	45,920	7,940	(2) 20	240,300	17' 6-1/4"	9' 4"	12' 1"
AT 224-3L20	1,142	25,220	46,020	7,990	(2) 25	257,800	17' 6-1/4"	9' 4"	12' 1"
AT 224-3M20	1,219	25,440	46,240	8,100	(2) 30	272,900	17' 6-1/4"	9' 4"	12' 1"
AT 224-3N20	1,366	25,960	46,760	8,360	(2) 40	298,300	17' 6-1/4"	9' 4"	12' 1"
AT 224-3O20	1,482	26,080	46,880	8,420	(2) 50	319,800	17' 6-1/4"	9' 4"	12' 1"
AT 224-4K20	1,119	26,920	47,720	8,840	(2) 20	236,300	18' 6-1/4"	10' 4"	13' 1"
AT 224-4L20	1,210	27,020	47,820	8,890	(2) 25	253,500	18' 6-1/4"	10' 4"	13' 1"
AT 224-4M20	1,284	27,240	48,040	9,000	(2) 30	268,500	18' 6-1/4"	10' 4"	13' 1"
AT 224-4N20	1,428	27,760	48,560	9,260	(2) 40	293,700	18' 6-1/4"	10' 4"	13' 1"
AT 224-4O20	1,545	27,880	48,680	9,320	(2) 50	314,700	18' 6-1/4"	10' 4"	13' 1"
AT 224-4P20	1,603	28,100	48,900	9,430	(2) 60	333,500	18' 6-1/4"	10' 4"	13' 1"
SLSF Addition		2,400	2,400	1,200			1' 3-1/2"	1' 3-1/2"	

NOTE: (1) An adequately sized bleed line must be installed in the cooling tower system to prevent build-up of impurities in the recirculated water.
(2) Do not use catalog drawings for certified prints. Dimensions and weights are subject to change.
(3) Adequate spacing must be allowed for access to the cooling tower. Refer to EVAPCO's Equipment Layout Manual.
(4) Nominal Tonnage is based on 3 gpm per ton at 95 degree entering water temperature, 85 degree leaving water temperature, and 78 degree wet-bulb temperature.
(5) This box size is available in a dual fan/cell configuration.

◇ Outlet connection extends beyond bottom flange.
✦ Heaviest section is upper section.
† Height includes fan guard which ships factory mounted.

Models: AT/UT/USS 212-2K40 to 212-4P40

Two-Cell Cooling Towers

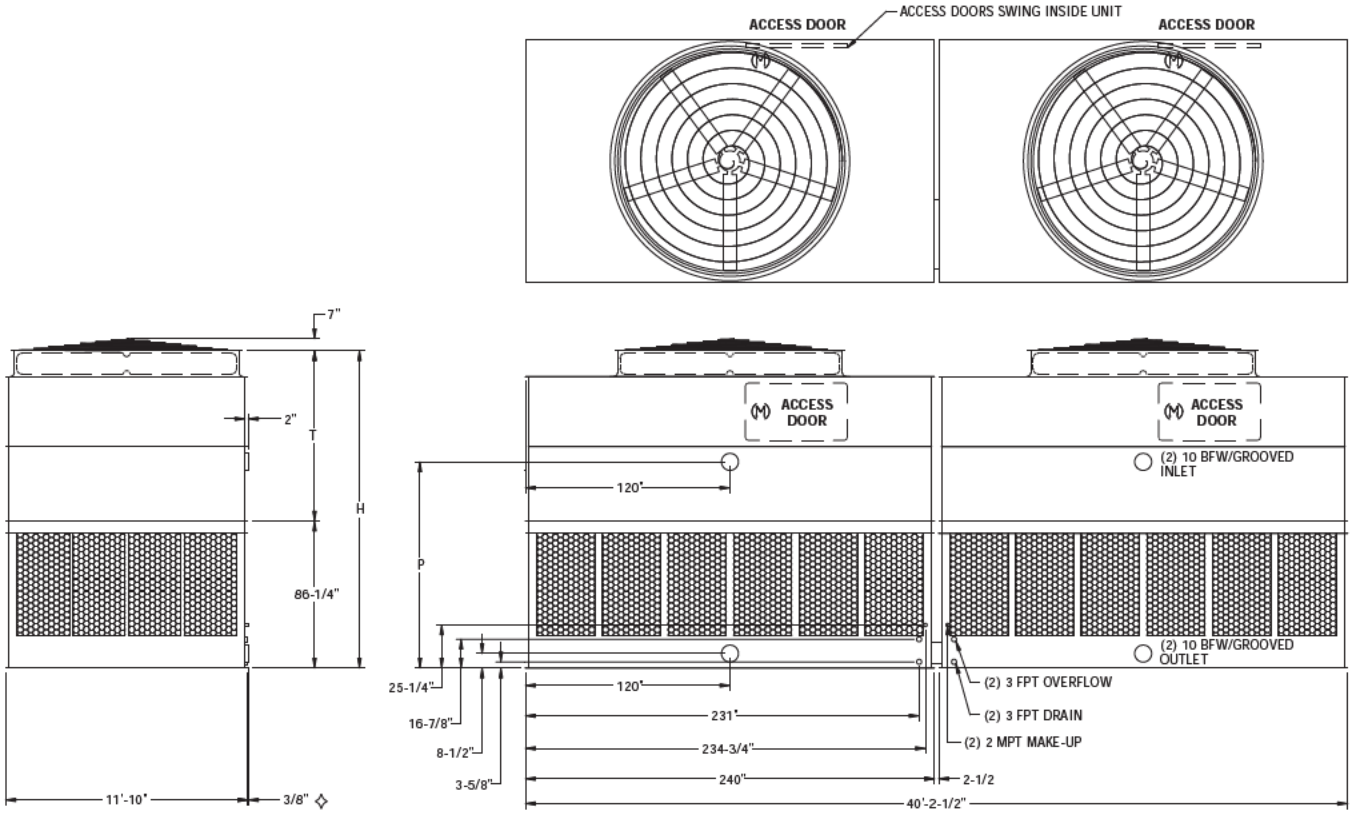

Model No.	Nominal Tonnage	WEIGHTS (LBS)			Fan Motor (HP)	Air Flow (CFM)	DIMENSIONS		
		Shipping	Operating	Heaviest Section✦			H†	T†	P
AT 212-2K40	918	22,940	43,740	7,210	(2) 20	246,500	15' 6-1/2"	8' 4"	10' 1"
AT 212-2L40	1,013	23,040	43,840	7,260	(2) 25	264,600	15' 6-1/2"	8' 4"	10' 1"
AT 212-2M40	1,088	23,260	44,060	7,370	(2) 30	280,300	15' 6-1/2"	8' 4"	10' 1"
AT 212-2N40	1,250	23,780	44,580	7,630	(2) 40	306,600	15' 6-1/2"	8' 4"	10' 1"
AT 212-2O40	1,357	23,900	44,700	7,690	(2) 50	329,000	15' 6-1/2"	8' 4"	10' 1"
AT 212-3K40	1,073	24,400	45,200	7,940	(2) 20	242,400	16' 6-1/2"	9' 4"	11' 1"
AT 212-3L40	1,170	24,500	45,300	7,990	(2) 25	260,000	16' 6-1/2"	9' 4"	11' 1"
AT 212-3M40	1,246	24,720	45,520	8,100	(2) 30	275,300	16' 6-1/2"	9' 4"	11' 1"
AT 212-3N40	1,396	25,240	46,040	8,360	(2) 40	300,900	16' 6-1/2"	9' 4"	11' 1"
AT 212-3O40	1,515	25,360	46,160	8,420	(2) 50	322,600	16' 6-1/2"	9' 4"	11' 1"
AT 212-4K40	1,143	26,200	47,000	8,840	(2) 20	238,300	17' 6-1/2"	10' 4"	12' 1"
AT 212-4L40	1,235	26,300	47,100	8,890	(2) 25	255,700	17' 6-1/2"	10' 4"	12' 1"
AT 212-4M40	1,310	26,520	47,320	9,000	(2) 30	270,900	17' 6-1/2"	10' 4"	12' 1"
AT 212-4N40	1,457	27,040	47,840	9,260	(2) 40	296,200	17' 6-1/2"	10' 4"	12' 1"
AT 212-4O40	1,576	27,160	47,960	9,320	(2) 50	317,300	17' 6-1/2"	10' 4"	12' 1"
AT 212-4P40	1,635	27,380	48,180	9,430	(2) 60	336,300	17' 6-1/2"	10' 4"	12' 1"
SLSF Addition		2,400	2,400	1,200			1' 3-1/2"	1' 3-1/2"	

NOTE: (1) An adequately sized bleed line must be installed in the cooling tower system to prevent build-up of impurities in the recirculated water.
(2) Do not use catalog drawings for certified prints. Dimensions and weights are subject to change.
(3) Adequate spacing must be allowed for access to the cooling tower. Refer to EVAPCO's Equipment Layout Manual.
(4) Nominal Tonnage is based on 3 gpm per ton at 95 degree entering water temperature, 85 degree leaving water temperature, and 78 degree wet-bulb temperature.
(5) This box size is available in a dual fan/cell configuration.

✧ Outlet connection extends beyond bottom flange.
† Height includes fan guard which ships factory mounted.
✦ Heaviest section is upper section.

Models: AT/UT/USS 312-2K60 to 312-4P60

Three-Cell Cooling Towers

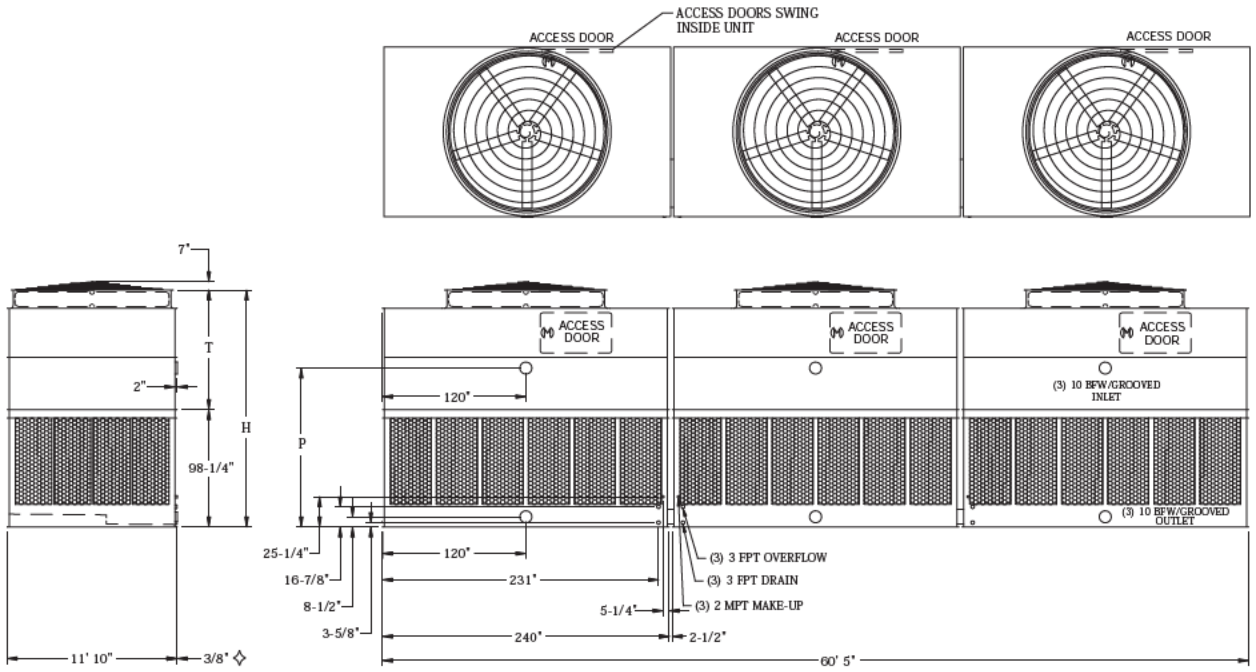

Model No.	Nominal Tonnage	WEIGHTS (LBS)			Fan Motor (HP)	Air Flow (CFM)	DIMENSIONS		
		Shipping	Operating	Heaviest Section✦			H†	T†	P
AT 312-2K60	1,368	34,890	66,090	7,210	(3) 20	369,800	16' 6-1/4"	8' 4"	11' 1"
AT 312-2L60	1,508	35,040	66,240	7,260	(3) 25	396,900	16' 6-1/4"	8' 4"	11' 1"
AT 312-2M60	1,622	35,370	66,570	7,370	(3) 30	420,600	16' 6-1/4"	8' 4"	11' 1"
AT 312-2N60	1,865	36,150	67,350	7,630	(3) 40	460,000	16' 6-1/4"	8' 4"	11' 1"
AT 312-2O60	2,023	36,330	67,530	7,690	(3) 50	493,600	16' 6-1/4"	8' 4"	11' 1"
AT 312-3K60	1,600	37,080	68,280	7,940	(3) 20	363,700	17' 6-1/4"	9' 4"	12' 1"
AT 312-3L60	1,745	37,230	68,430	7,990	(3) 25	390,100	17' 6-1/4"	9' 4"	12' 1"
AT 312-3M60	1,859	37,560	68,760	8,100	(3) 30	413,000	17' 6-1/4"	9' 4"	12' 1"
AT 312-3N60	2,083	38,340	69,540	8,360	(3) 40	451,400	17' 6-1/4"	9' 4"	12' 1"
AT 312-3O60	2,260	38,520	69,720	8,420	(3) 50	484,000	17' 6-1/4"	9' 4"	12' 1"
AT 312-4K60	1,707	39,780	70,980	8,840	(3) 20	357,600	18' 6-1/4"	10' 4"	13' 1"
AT 312-4L60	1,844	39,930	71,130	8,890	(3) 25	383,700	18' 6-1/4"	10' 4"	13' 1"
AT 312-4M60	1,955	40,260	71,460	9,000	(3) 30	406,400	18' 6-1/4"	10' 4"	13' 1"
AT 312-4N60	2,174	41,040	72,240	9,260	(3) 40	444,400	18' 6-1/4"	10' 4"	13' 1"
AT 312-4O60	2,352	41,220	72,420	9,320	(3) 50	476,100	18' 6-1/4"	10' 4"	13' 1"
AT 312-4P60	2,440	41,550	72,750	9,430	(3) 60	504,600	18' 6-1/4"	10' 4"	13' 1"
SLSF Addition		3,600	3,600	1,200			1' 3-1/2"	1' 3-1/2"	

NOTE: (1) An adequately sized bleed line must be installed in the cooling tower system to prevent build-up of impurities in the recirculated water.
(2) Do not use catalog drawings for certified prints. Dimensions and weights are subject to change.
(3) Adequate spacing must be allowed for access to the cooling tower. Refer to EVAPCO's Equipment Layout Manual.
(4) Nominal Tonnage is based on 3 gpm per ton at 95 degree entering water temperature, 85 degree leaving water temperature, and 78 degree wet-bulb temperature.
(5) This box size is available in a dual fan/cell configuration.

✧ Outlet connection extends beyond bottom flange.
✦ Heaviest section is upper section.
† Height includes fan guard which ships factory mounted.

Models: AT/UT/USS 424-2K40 to 424-4P40

Four-Cell Cooling Towers

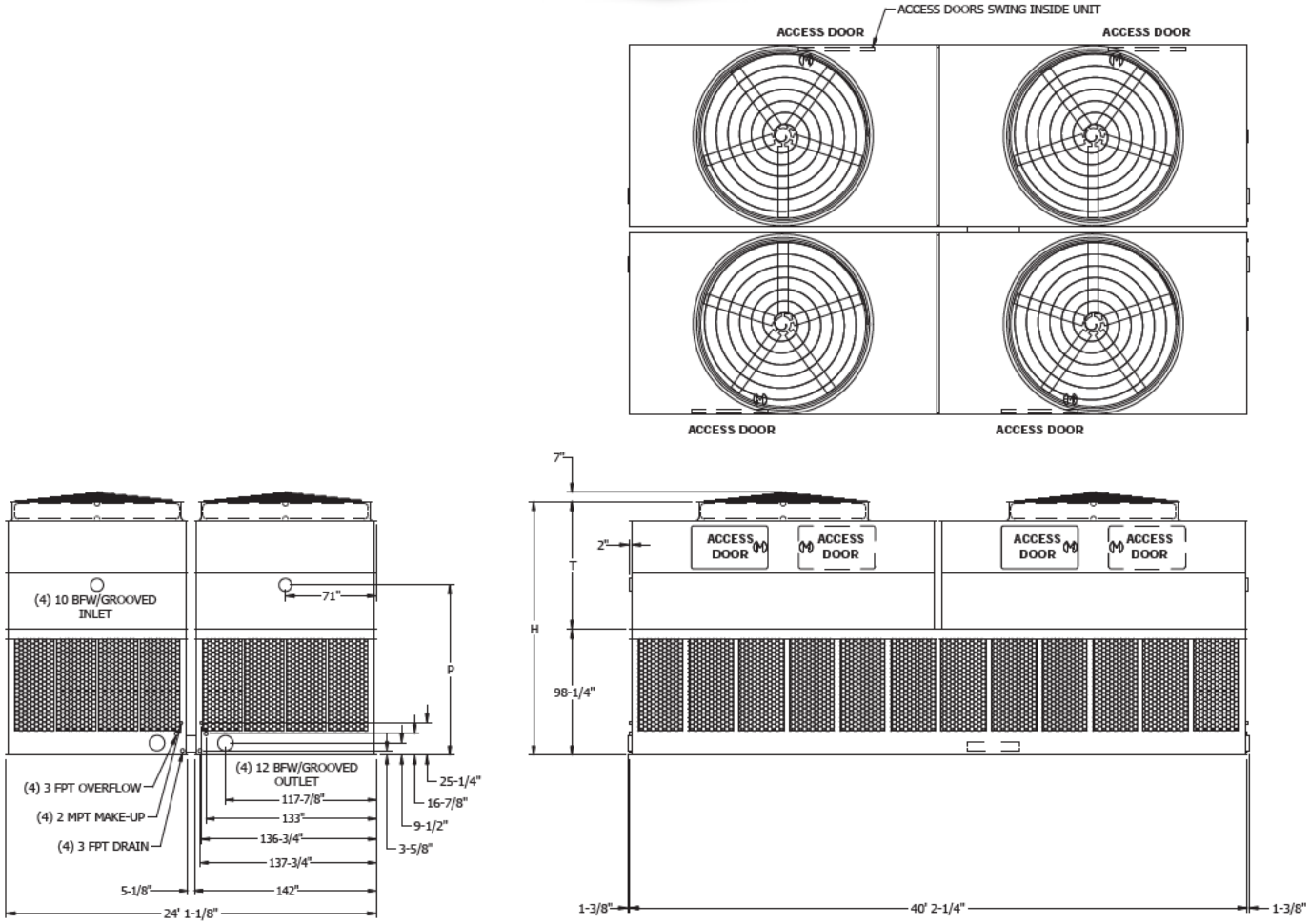

Model No.	Nominal Tonnage	WEIGHTS (LBS)			Fan Motor (HP)	Air Flow (CFM)	DIMENSIONS		
		Shipping	Operating	Heaviest Section✦			H†	T†	P
AT 424-2K40	1,733	46,840	88,040	9,000	(4) 20	472,200	16' 6-1/4"	8' 4"	11' 1"
AT 424-2L40	1,919	47,040	88,240	9,000	(4) 25	506,800	16' 6-1/4"	8' 4"	11' 1"
AT 424-2M40	2,064	47,480	88,680	9,000	(4) 30	537,000	16' 6-1/4"	8' 4"	11' 1"
AT 424-2N40	2,379	48,520	89,720	9,000	(4) 40	587,500	16' 6-1/4"	8' 4"	11' 1"
AT 424-2O40	2,584	48,760	89,960	9,000	(4) 50	630,400	16' 6-1/4"	8' 4"	11' 1"
AT 424-3K40	2,038	49,760	90,960	9,000	(4) 20	464,500	17' 6-1/4"	9' 4"	12' 1"
AT 424-3L40	2,230	49,960	91,160	9,000	(4) 25	498,300	17' 6-1/4"	9' 4"	12' 1"
AT 424-3M40	2,380	50,400	91,600	9,000	(4) 30	527,600	17' 6-1/4"	9' 4"	12' 1"
AT 424-3N40	2,670	51,440	92,640	9,000	(4) 40	576,800	17' 6-1/4"	9' 4"	12' 1"
AT 424-3O40	2,900	51,680	92,880	9,000	(4) 50	618,200	17' 6-1/4"	9' 4"	12' 1"
AT 424-4K40	2,190	53,360	94,560	9,000	(4) 20	456,500	18' 6-1/4"	10' 4"	13' 1"
AT 424-4L40	2,369	53,560	94,760	9,000	(4) 25	489,900	18' 6-1/4"	10' 4"	13' 1"
AT 424-4M40	2,515	54,000	95,200	9,000	(4) 30	519,000	18' 6-1/4"	10' 4"	13' 1"
AT 424-4N40	2,798	55,040	96,240	9,260	(4) 40	567,600	18' 6-1/4"	10' 4"	13' 1"
AT 424-4O40	3,028	55,280	96,480	9,320	(4) 50	608,300	18' 6-1/4"	10' 4"	13' 1"
AT 424-4P40	3,141	55,720	96,920	9,430	(4) 60	644,800	18' 6-1/4"	10' 4"	13' 1"
SLSF Addition		4,800	4,800	1,200			1' 3-1/2"		

NOTE:
(1) An adequately sized bleed line must be installed in the cooling tower system to prevent build-up of impurities in the recirculated water.
(2) Do not use catalog drawings for certified prints. Dimensions and weights are subject to change.
(3) Adequate spacing must be allowed for access to the cooling tower. Refer to EVAPCO's Equipment Layout Manual.
(4) Nominal Tonnage is based on 3 gpm per ton at 95 degree entering water temperature, 85 degree leaving water temperature, and 78 degree wet-bulb temperature.
(5) This box size is available in a dual fan/cell configuration.

✧ Outlet connection extends beyond bottom flange.
† Height includes fan guard which ships factory mounted.
✦ L=Lower Section, U=Upper Section

Models: AT/UT/USS 114-2K24 to 114-4R24

One-Cell Cooling Towers

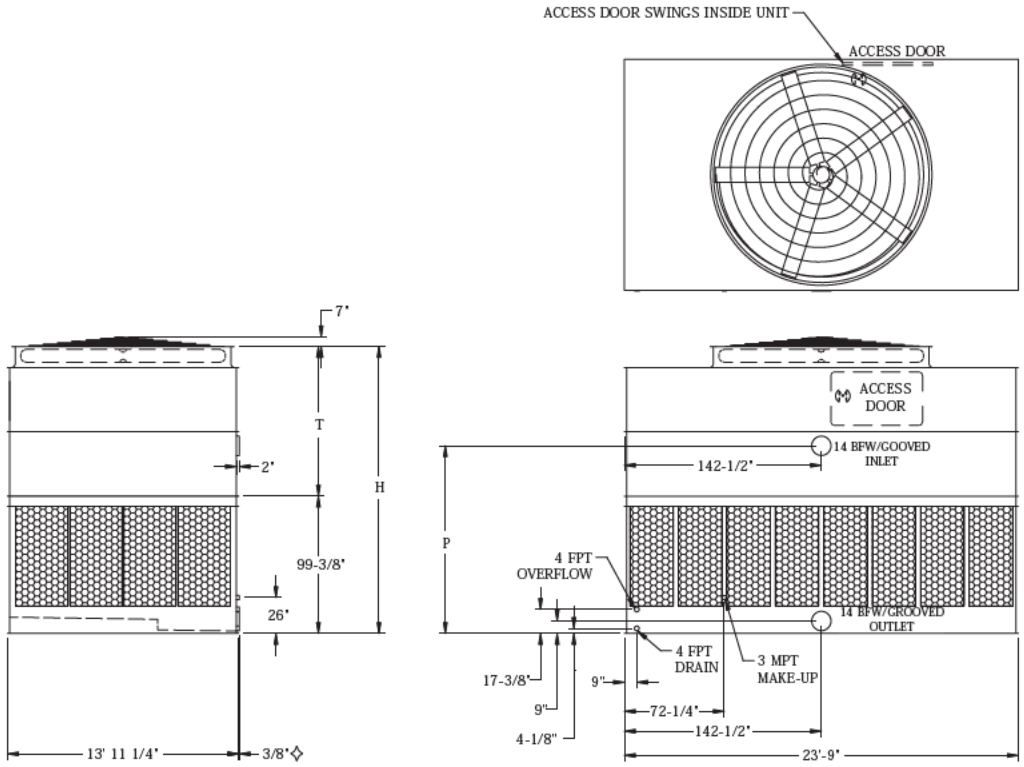

Model No.	Nominal Tonnage	WEIGHTS (LBS)			Fan Motor (HP)	Air Flow (CFM)	DIMENSIONS		
		Shipping	Operating	Heaviest Section✦			H†	T†	P
AT 114-2K24	619	16,870	32,720	10,600	20	159,500	17' 5-5/8"	9' 2-1/4"	11' 3-7/8"
AT 114-2L24	684	16,920	32,770	10,650	25	171,200	17' 5-5/8"	9' 2-1/4"	11' 3-7/8"
AT 114-2M24	722	16,940	32,790	10,670	30	181,500	17' 5-5/8"	9' 2-1/4"	11' 3-7/8"
AT 114-2N24	781	17,090	32,940	10,820	40	199,100	17' 5-5/8"	9' 2-1/4"	11' 3-7/8"
AT 114-2O24	839	17,440	33,290	11,170	50	213,800	17' 5-5/8"	9' 2-1/4"	11' 3-7/8"
AT 114-3K24	708	17,910	33,760	11,640	20	157,100	18' 5-5/8"	10' 2-1/4"	12' 3-7/8"
AT 114-3L24	775	17,960	33,810	11,690	25	168,500	18' 5-5/8"	10' 2-1/4"	12' 3-7/8"
AT 114-3M24	812	17,980	33,830	11,710	30	178,600	18' 5-5/8"	10' 2-1/4"	12' 3-7/8"
AT 114-3N24	892	18,130	33,980	11,860	40	195,500	18' 5-5/8"	10' 2-1/4"	12' 3-7/8"
AT 114-3O24	951	18,480	34,330	12,210	50	209,800	18' 5-5/8"	10' 2-1/4"	12' 3-7/8"
AT 114-3P24	1,008	18,650	34,500	12,380	60	222,100	18' 5-5/8"	10' 2-1/4"	12' 3-7/8"
AT 114-4K24	772	18,950	34,800	12,680	20	154,300	19' 5-5/8"	11' 2-1/4"	13' 3-7/8"
AT 114-4L24	834	19,000	34,850	12,730	25	165,600	19' 5-5/8"	11' 2-1/4"	13' 3-7/8"
AT 114-4M24	872	19,020	34,870	12,750	30	175,500	19' 5-5/8"	11' 2-1/4"	13' 3-7/8"
AT 114-4N24	947	19,170	35,020	12,900	40	192,300	19' 5-5/8"	11' 2-1/4"	13' 3-7/8"
AT 114-4O24	998	19,520	35,370	13,250	50	206,500	19' 5-5/8"	11' 2-1/4"	13' 3-7/8"
AT 114-4P24	1,056	19,690	35,540	13,420	60	218,600	19' 5-5/8"	11' 2-1/4"	13' 3-7/8"
AT 114-4Q24	1,135	19,930	35,780	13,660	75	234,300	19' 5-5/8"	11' 2-1/4"	13' 3-7/8"
AT 114-4R24	1,201	20,370	36,220	14,100	100	256,700	19' 5-5/8"	11' 2-1/4"	13' 3-7/8"
SLSF Addition		1,250	1,250	1,250			1' 1-1/2"	1' 1-1/2"	

NOTE: (1) An adequately sized bleed line must be installed in the cooling tower system to prevent build-up of impurities in the recirculated water.
(2) Do not use catalog drawings for certified prints. Dimensions and weights are subject to change.
(3) Adequate spacing must be allowed for access to the cooling tower. Refer to EVAPCO's Equipment Layout Manual.
(4) Nominal Tonnage is based on 3 gpm per ton at 95 degree entering water temperature, 85 degree leaving water temperature, and 78 degree wet-bulb temperature.

✧ Outlet connection extends beyond bottom flange.
† Height includes fan guard which ships factory mounted.
✦ Heaviest section is upper section.

* Model available with gear drive only. Motor and access door located on 13' 11-1/4" unit end. Super Low Sound Fan is not available on this unit.

Models: AT/UT/USS 228-2K24 to 228-4R24

Two-Cell Cooling Towers

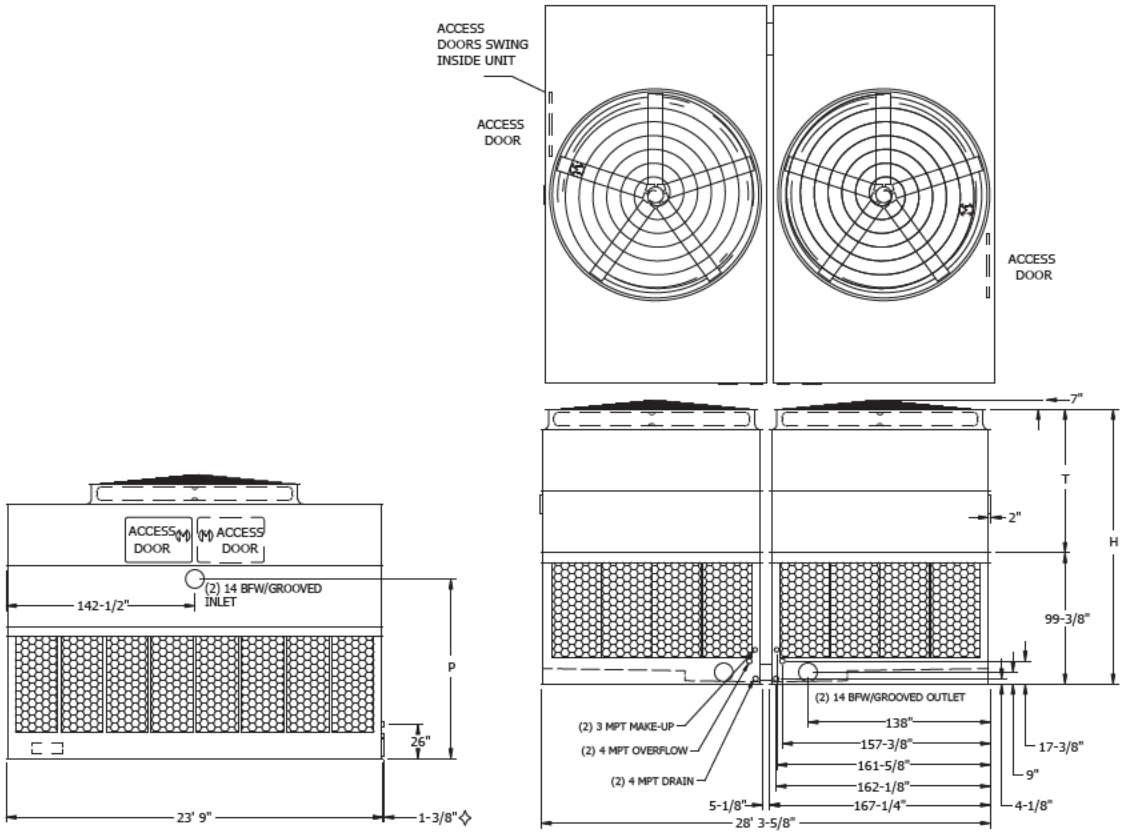

Model No.	Nominal Tonnage	WEIGHTS (LBS)			Fan Motor (HP)	Air Flow (CFM)	DIMENSIONS		
		Shipping	Operating	Heaviest Section✦			H†	T†	P
AT 228-2K24	1,198	33,260	64,960	10,600	(2) 20	312,300	17' 5-5/8"	9' 2-1/4"	11' 3-7/8"
AT 228-2L24	1,329	33,360	65,060	10,650	(2) 25	335,200	17' 5-5/8"	9' 2-1/4"	11' 3-7/8"
AT 228-2M24	1,402	33,400	65,100	10,670	(2) 30	355,400	17' 5-5/8"	9' 2-1/4"	11' 3-7/8"
AT 228-2N24	1,520	33,700	65,400	10,820	(2) 40	389,900	17' 5-5/8"	9' 2-1/4"	11' 3-7/8"
AT 228-2O24	1,633	34,400	66,100	11,170	(2) 50	418,800	17' 5-5/8"	9' 2-1/4"	11' 3-7/8"
AT 228-3K24	1,376	35,340	67,040	11,640	(2) 20	307,600	18' 5-5/8"	10' 2-1/4"	12' 3-7/8"
AT 228-3L24	1,510	35,440	67,140	11,690	(2) 25	330,000	18' 5-5/8"	10' 2-1/4"	12' 3-7/8"
AT 228-3M24	1,582	35,480	67,180	11,710	(2) 30	349,800	18' 5-5/8"	10' 2-1/4"	12' 3-7/8"
AT 228-3N24	1,740	35,780	67,480	11,860	(2) 40	383,000	18' 5-5/8"	10' 2-1/4"	12' 3-7/8"
AT 228-3O24	1,855	36,480	68,180	12,210	(2) 50	411,000	18' 5-5/8"	10' 2-1/4"	12' 3-7/8"
AT 228-3P24	1,969	36,820	68,520	12,380	(2) 60	435,100	18' 5-5/8"	10' 2-1/4"	12' 3-7/8"
AT 228-4K24	1,508	37,420	69,120	12,680	(2) 20	302,100	19' 5-5/8"	11' 2-1/4"	13' 3-7/8"
AT 228-4L24	1,630	37,520	69,220	12,730	(2) 25	324,200	19' 5-5/8"	11' 2-1/4"	13' 3-7/8"
AT 228-4M24	1,706	37,560	69,260	12,750	(2) 30	343,700	19' 5-5/8"	11' 2-1/4"	13' 3-7/8"
AT 228-4N24	1,853	37,860	69,560	12,900	(2) 40	376,600	19' 5-5/8"	11' 2-1/4"	13' 3-7/8"
AT 228-4O24	1,952	38,560	70,260	13,250	(2) 50	404,400	19' 5-5/8"	11' 2-1/4"	13' 3-7/8"
AT 228-4P24	2,067	38,900	70,600	13,420	(2) 60	428,100	19' 5-5/8"	11' 2-1/4"	13' 3-7/8"
AT 228-4Q24	2,221	39,380	71,080	13,660	(2) 75	458,900	19' 5-5/8"	11' 2-1/4"	13' 3-7/8"
AT 228-4R24	2,350	40,260	71,960	14,100	(2) 100	502,900	19' 5-5/8"	11' 2-1/4"	13' 3-7/8"
SLSF Addition		2,500	2,500	1,250			1' 1-1/2"	1' 1-1/2"	

NOTE: (1) An adequately sized bleed line must be installed in the cooling tower system to prevent build-up of impurities in the recirculated water.
(2) Do not use catalog drawings for certified prints. Dimensions and weights are subject to change.
(3) Adequate spacing must be allowed for access to the cooling tower. Refer to EVAPCO's Equipment Layout Manual.
(4) Nominal Tonnage is based on 3 gpm per ton at 95 degree entering water temperature, 85 degree leaving water temperature, and 78 degree wet-bulb temperature.

✧ Outlet connection extends beyond bottom flange.
† Height includes fan guard which ships factory mounted.
✦ Heaviest section is upper section.

* Model available with gear drive only. Motors and access doors located on 28'3-5/8" unit end. Super Low Sound Fan is not available on this unit.

Models: AT/UT/USS 214-2K48 to 214-4R48

Two-Cell Cooling Towers

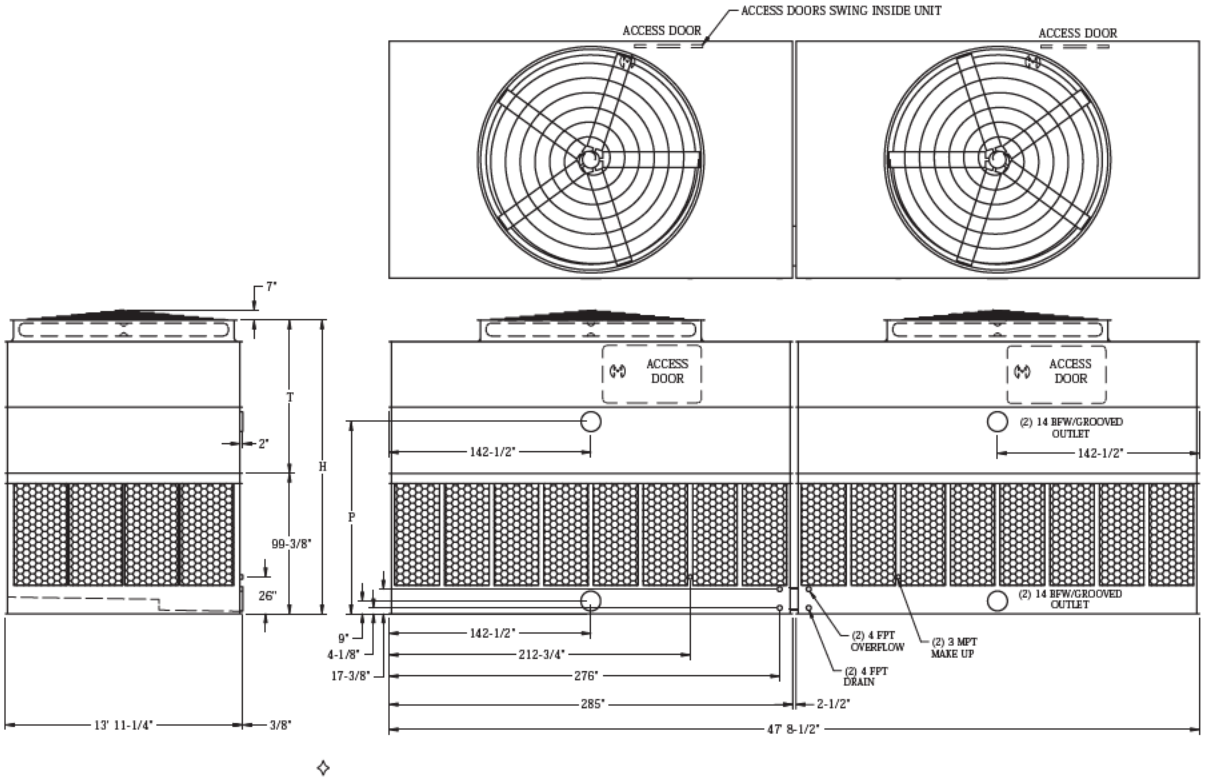

✧

Model No.	Nominal Tonnage	WEIGHTS (LBS)			Fan Motor (HP)	Air Flow (CFM)	DIMENSIONS		
		Shipping	Operating	Heaviest Section✦			H†	T†	P
AT 214-2K48	1,205	33,420	65,120	10,600	(2) 20	313,500	17' 5-5/8"	9' 2-1/4"	11' 3-7/8"
AT 214-2L48	1,336	33,520	65,220	10,650	(2) 25	336,500	17' 5-5/8"	9' 2-1/4"	11' 3-7/8"
AT 214-2M48	1,410	33,560	65,260	10,670	(2) 30	356,800	17' 5-5/8"	9' 2-1/4"	11' 3-7/8"
AT 214-2N48	1,527	33,860	65,560	10,820	(2) 40	391,500	17' 5-5/8"	9' 2-1/4"	11' 3-7/8"
AT 214-2O48	1,641	34,560	66,260	11,170	(2) 50	420,400	17' 5-5/8"	9' 2-1/4"	11' 3-7/8"
AT 214-3K48	1,383	35,500	67,200	11,640	(2) 20	308,800	18' 5-5/8"	10' 2-1/4"	12' 3-7/8"
AT 214-3L48	1,517	35,600	67,300	11,690	(2) 25	331,200	18' 5-5/8"	10' 2-1/4"	12' 3-7/8"
AT 214-3M48	1,589	35,640	67,340	11,710	(2) 30	351,200	18' 5-5/8"	10' 2-1/4"	12' 3-7/8"
AT 214-3N48	1,748	35,940	67,640	11,860	(2) 40	384,400	18' 5-5/8"	10' 2-1/4"	12' 3-7/8"
AT 214-3O48	1,863	36,640	68,340	12,210	(2) 50	412,500	18' 5-5/8"	10' 2-1/4"	12' 3-7/8"
AT 214-3P48	1,978	36,980	68,680	12,380	(2) 60	436,800	18' 5-5/8"	10' 2-1/4"	12' 3-7/8"
AT 214-4K48	1,514	37,580	69,280	12,680	(2) 20	303,200	19' 5-5/8"	11' 2-1/4"	13' 3-7/8"
AT 214-4L48	1,637	37,680	69,380	12,730	(2) 25	325,400	19' 5-5/8"	11' 2-1/4"	13' 3-7/8"
AT 214-4M48	1,713	37,720	69,420	12,750	(2) 30	345,000	19' 5-5/8"	11' 2-1/4"	13' 3-7/8"
AT 214-4N48	1,860	38,020	69,720	12,900	(2) 40	378,000	19' 5-5/8"	11' 2-1/4"	13' 3-7/8"
AT 214-4O48	1,960	38,720	70,420	13,250	(2) 50	405,900	19' 5-5/8"	11' 2-1/4"	13' 3-7/8"
AT 214-4P48	2,075	39,060	70,760	13,420	(2) 60	429,800	19' 5-5/8"	11' 2-1/4"	13' 3-7/8"
AT 214-4Q48	2,230	39,540	71,240	13,660	(2) 75	460,600	19' 5-5/8"	11' 2-1/4"	13' 3-7/8"
AT 214-4R48	2,359	40,420	72,120	14,100	(2) 100	504,800	19' 5-5/8"	11' 2-1/4"	13' 3-7/8"
SLSF Addition		2,500	2,500	1,250			1' 1-1/2"	1' 1-1/2"	

NOTE: (1) An adequately sized bleed line must be installed in the cooling tower system to prevent build-up of impurities in the recirculated water.
(2) Do not use catalog drawings for certified prints. Dimensions and weights are subject to change.
(3) Adequate spacing must be allowed for access to the cooling tower. Refer to EVAPCO's Equipment Layout Manual.
(4) Nominal Tonnage is based on 3 gpm per ton at 95 degree entering water temperature, 85 degree leaving water temperature, and 78 degree wet-bulb temperature.

✧ Outlet connection extends beyond bottom flange.
✦ Heaviest section is upper section.
† Height includes fan guard which ships factory mounted.

* Model available with gear drive only. Motors and access doors located on 13'11-1/4" unit ends. Super Low Sound Fan is not available on this unit.

Models: AT/UT/USS 314-2K72 to 314-4Q72

Three-Cell Cooling Towers

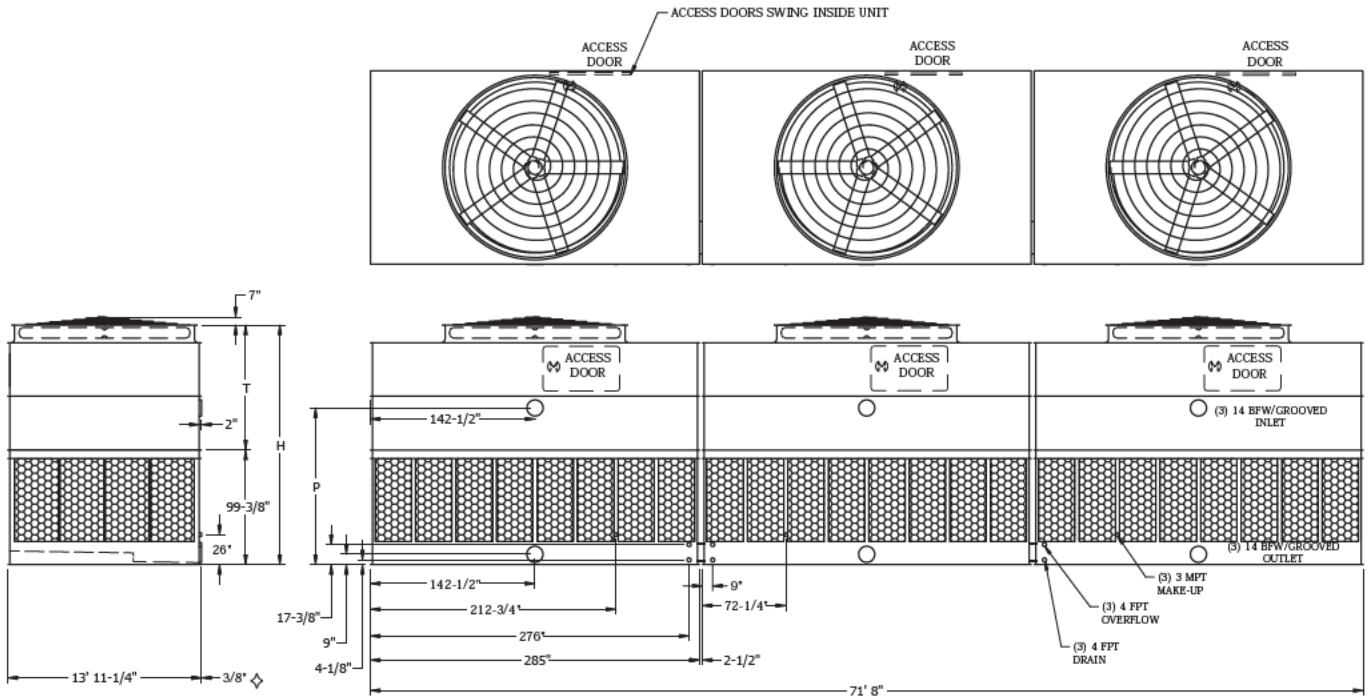

Model No.	Nominal Tonnage	WEIGHTS (LBS)			Fan Motor (HP)	Air Flow (CFM)	DIMENSIONS		
		Shipping	Operating	Heaviest Section✦			H†	T†	P
AT 314-2K72	1,789	49,980	97,530	10,600	(3) 20	467,000	17' 5-5/8"	9' 2-1/4"	11' 3-7/8"
AT 314-2L72	1,986	50,130	97,680	10,650	(3) 25	501,300	17' 5-5/8"	9' 2-1/4"	11' 3-7/8"
AT 314-2M72	2,095	50,190	97,740	10,670	(3) 30	531,600	17' 5-5/8"	9' 2-1/4"	11' 3-7/8"
AT 314-2N72	2,271	50,640	98,190	10,820	(3) 40	583,200	17' 5-5/8"	9' 2-1/4"	11' 3-7/8"
AT 314-2O72	2,439	51,690	99,240	11,170	(3) 50	626,300	17' 5-5/8"	9' 2-1/4"	11' 3-7/8"
AT 314-3K72	2,056	53,100	100,650	11,640	(3) 20	460,000	18' 5-5/8"	10' 2-1/4"	12' 3-7/8"
AT 314-3L72	2,257	53,250	100,800	11,690	(3) 25	493,500	18' 5-5/8"	10' 2-1/4"	12' 3-7/8"
AT 314-3M72	2,364	53,310	100,860	11,710	(3) 30	523,200	18' 5-5/8"	10' 2-1/4"	12' 3-7/8"
AT 314-3N72	2,601	53,760	101,310	11,860	(3) 40	572,800	18' 5-5/8"	10' 2-1/4"	12' 3-7/8"
AT 314-3O72	2,773	54,810	102,360	12,210	(3) 50	614,600	18' 5-5/8"	10' 2-1/4"	12' 3-7/8"
AT 314-3P72	2,944	55,320	102,870	12,380	(3) 60	650,800	18' 5-5/8"	10' 2-1/4"	12' 3-7/8"
AT 314-4K72	2,255	56,220	103,770	12,680	(3) 20	451,700	19' 5-5/8"	11' 2-1/4"	13' 3-7/8"
AT 314-4L72	2,437	56,370	103,920	12,730	(3) 25	484,800	19' 5-5/8"	11' 2-1/4"	13' 3-7/8"
AT 314-4M72	2,551	56,430	103,980	12,750	(3) 30	514,000	19' 5-5/8"	11' 2-1/4"	13' 3-7/8"
AT 314-4N72	2,770	56,880	104,430	12,900	(3) 40	563,200	19' 5-5/8"	11' 2-1/4"	13' 3-7/8"
AT 314-4O72	2,919	57,930	105,480	13,250	(3) 50	604,800	19' 5-5/8"	11' 2-1/4"	13' 3-7/8"
AT 314-4P72	3,091	58,440	105,990	13,420	(3) 60	640,300	19' 5-5/8"	11' 2-1/4"	13' 3-7/8"
AT 314-4Q72	3,322	59,160	106,710	13,660	(3) 75	686,300	19' 5-5/8"	11' 2-1/4"	13' 3-7/8"
SLSF Addition		3,750	3,750	1,250			1' 1-1/2"	1' 1-1/2"	

NOTE: (1) An adequately sized bleed line must be installed in the cooling tower system to prevent build-up of impurities in the recirculated water.
(2) Do not use catalog drawings for certified prints. Dimensions and weights are subject to change.
(3) Adequate spacing must be allowed for access to the cooling tower. Refer to EVAPCO's Equipment Layout Manual.
(4) Nominal Tonnage is based on 3 gpm per ton at 95 degree entering water temperature, 85 degree leaving water temperature, and 78 degree wet-bulb temperature.

✧ Outlet connection extends beyond bottom flange.
† Height includes fan guard which ships factory mounted.
✦ Heaviest section is upper section.

Models: AT/UT/USS 428-2K48 to 428-4R48

Four-Cell Cooling Towers

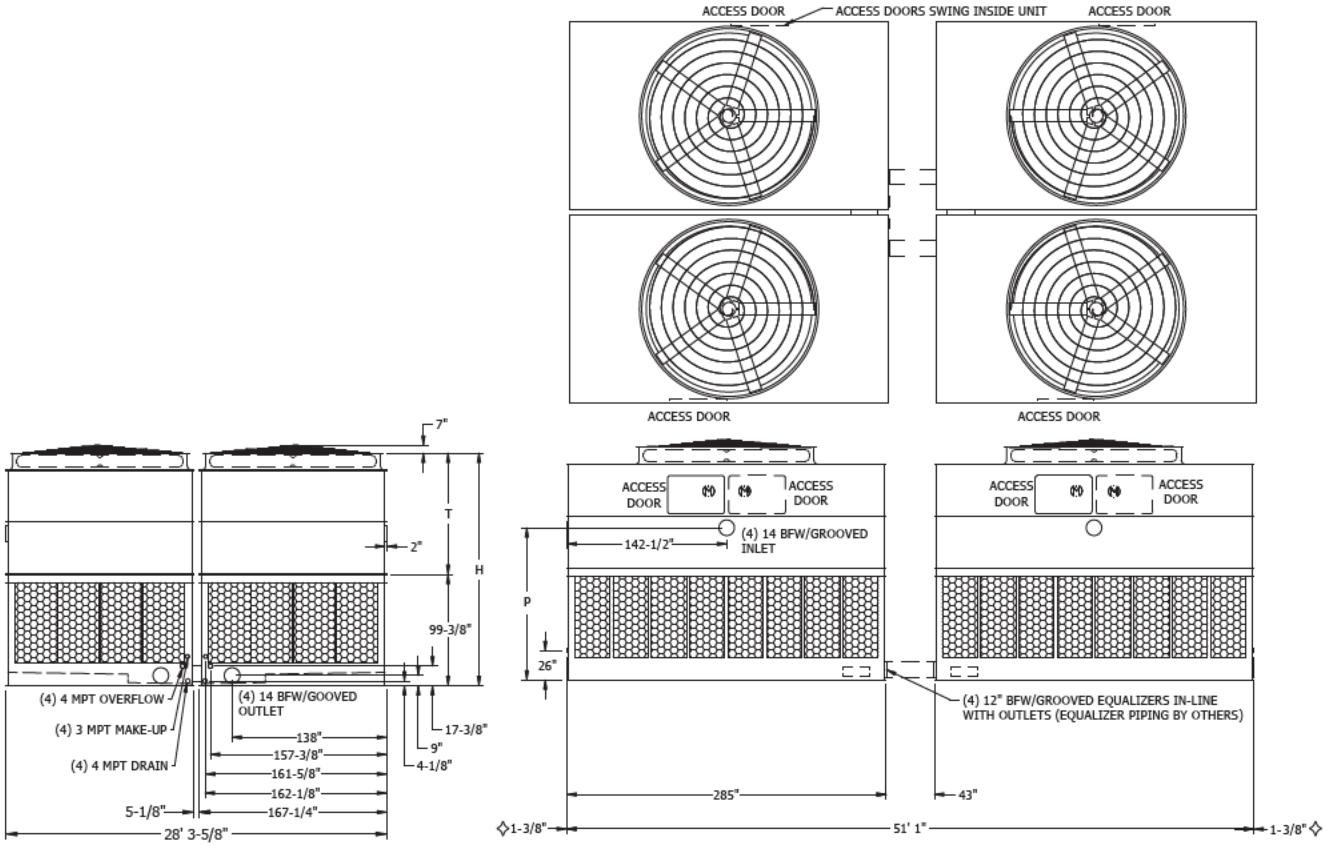

Model No.	Nominal Tonnage	WEIGHTS (LBS)			Fan Motor (HP)	Air Flow (CFM)	DIMENSIONS		
		Shipping	Operating	Heaviest Section✦			H†	T†	P
AT 428-2K48	2,231	66,560	129,960	10,600	(4)20	595,300	17' 5-5/8"	9' 2-1/4"	11' 3-7/8"
AT 428-2L48	2,482	66,760	130,160	10,650	(4)25	639,000	17' 5-5/8"	9' 2-1/4"	11' 3-7/8"
AT 428-2M48	2,626	66,840	130,240	10,670	(4)30	677,600	17' 5-5/8"	9' 2-1/4"	11' 3-7/8"
AT 428-2N48	2,846	67,440	130,840	10,820	(4)40	743,500	17' 5-5/8"	9' 2-1/4"	11' 3-7/8"
AT 428-2O48	3,067	68,840	132,240	11,170	(4)50	798,500	17' 5-5/8"	9' 2-1/4"	11' 3-7/8"
AT 428-3K48	2,585	70,720	134,120	11,640	(4)20	586,200	18' 5-5/8"	10' 2-1/4"	12' 3-7/8"
AT 428-3L48	2,837	70,920	134,320	11,690	(4)25	629,300	18' 5-5/8"	10' 2-1/4"	12' 3-7/8"
AT 428-3M48	2,984	71,000	134,400	11,710	(4)30	667,200	18' 5-5/8"	10' 2-1/4"	12' 3-7/8"
AT 428-3N48	3,283	71,600	135,000	11,860	(4)40	730,800	18' 5-5/8"	10' 2-1/4"	12' 3-7/8"
AT 428-3O48	3,509	73,000	136,400	12,210	(4)50	784,200	18' 5-5/8"	10' 2-1/4"	12' 3-7/8"
AT 428-3P48	3,728	73,680	137,080	12,380	(4)60	830,200	18' 5-5/8"	10' 2-1/4"	12' 3-7/8"
AT 428-4K48	2,858	74,880	138,280	12,680	(4)20	575,800	19' 5-5/8"	11' 2-1/4"	13' 3-7/8"
AT 428-4L48	3,093	75,080	138,480	12,730	(4)25	618,100	19' 5-5/8"	11' 2-1/4"	13' 3-7/8"
AT 428-4M48	3,237	75,160	138,560	12,750	(4)30	655,300	19' 5-5/8"	11' 2-1/4"	13' 3-7/8"
AT 428-4N48	3,524	75,760	139,160	12,900	(4)40	718,100	19' 5-5/8"	11' 2-1/4"	13' 3-7/8"
AT 428-4O48	3,714	77,160	140,560	13,250	(4)50	771,300	19' 5-5/8"	11' 2-1/4"	13' 3-7/8"
AT 428-4P48	3,933	77,840	141,240	13,420	(4)60	816,800	19' 5-5/8"	11' 2-1/4"	13' 3-7/8"
AT 428-4Q48	4,229	78,800	142,200	13,660	(4)75	875,700	19' 5-5/8"	11' 2-1/4"	13' 3-7/8"
AT 428-4R48	4,475	80,560	143,960	14,100	(4)100	960,000	19' 5-5/8"	11' 2-1/4"	13' 3-7/8"
SLSF Addition		5,000	5,000	1,250			1' 1-1/2"	1' 1-1/2"	

NOTE: (1) An adequately sized bleed line must be installed in the cooling tower system to prevent build-up of impurities in the recirculated water.
(2) Do not use catalog drawings for certified prints. Dimensions and weights are subject to change.
(3) Adequate spacing must be allowed for access to the cooling tower. Refer to EVAPCO's Equipment Layout Manual.
(4) Nominal Tonnage is based on 3 gpm per ton at 95 degree entering water temperature, 85 degree leaving water temperature, and 78 degree wet-bulb temperature.

✧ Outlet connection extends beyond bottom flange.
† Height includes fan guard which ships factory mounted.
✦ Heaviest section is upper section.

Models: AT/UT/USS 114-5K26 to 114-5O26

One-Cell Cooling Towers

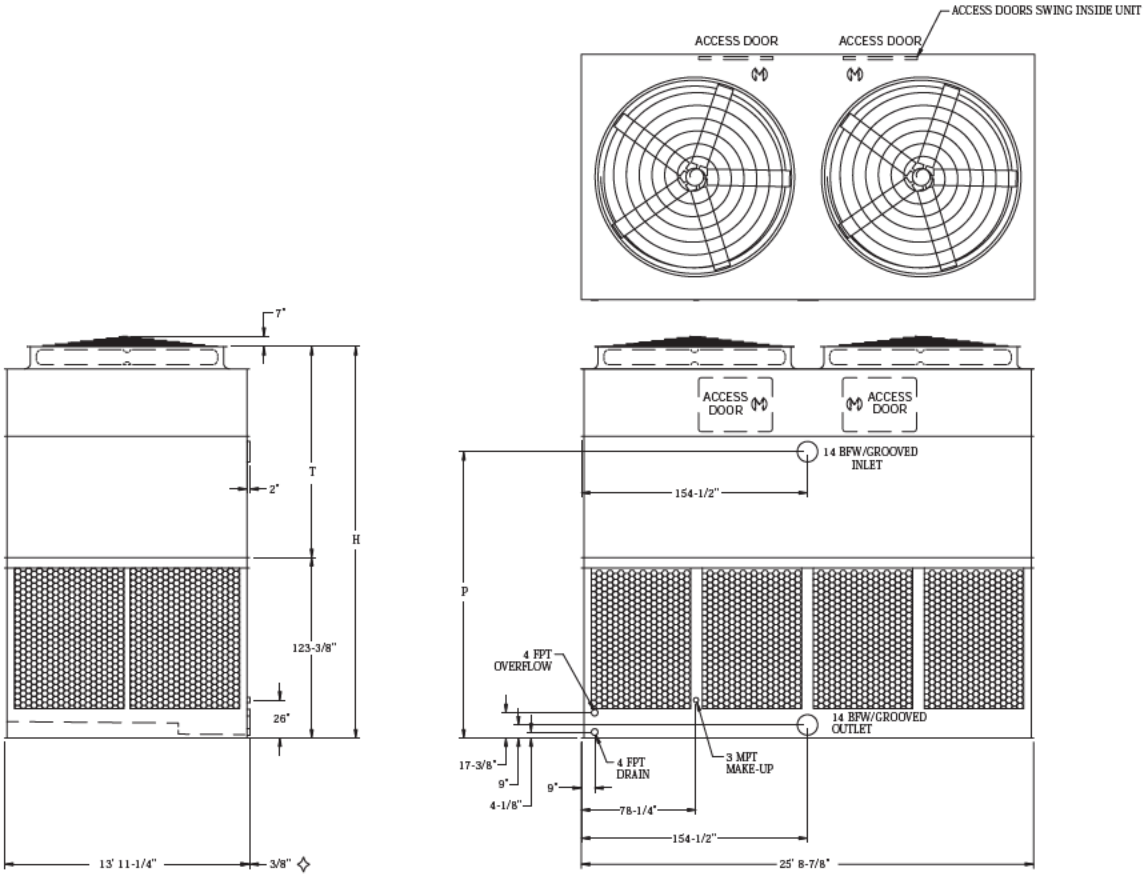

Model No.	Nominal Tonnage	WEIGHTS (LBS)			Fan Motor (HP)	Air Flow (CFM)	DIMENSIONS		
		Shipping	Operating	Heaviest Section✦			H†	T†	P
AT 114-5K26	1,003	24,640	41,470	17,660	(2) 20	200,200	22' 3-1/2"	12' 1/8"	16' 3-3/4"
AT 114-5L26	1,078	24,700	41,530	17,720	(2) 25	214,700	22' 3-1/2"	12' 1/8"	16' 3-3/4"
AT 114-5M26	1,142	24,800	41,630	17,820	(2) 30	227,300	22' 3-1/2"	12' 1/8"	16' 3-3/4"
AT 114-5N26	1,247	25,120	41,950	18,140	(2) 40	248,500	22' 3-1/2"	12' 1/8"	16' 3-3/4"
AT 114-5O26	1,332	25,140	41,970	18,160	(2) 50	266,300	22' 3-1/2"	12' 1/8"	16' 3-3/4"
SLSF Addition		2,400	2,400	1,200			1' 3-1/2"	1' 3-1/2"	

NOTE: (1) An adequately sized bleed line must be installed in the cooling tower system to prevent build-up of impurities in the recirculated water.
(2) Do not use catalog drawings for certified prints. Dimensions and weights are subject to change.
(3) Adequate spacing must be allowed for access to the cooling tower. Refer to EVAPCO's Equipment Layout Manual.
(4) Nominal Tonnage is based on 3 gpm per ton at 95 degree entering water temperature, 85 degree leaving water temperature, and 78 degree wet-bulb temperature.
(5) This box size is available in a dual fan/cell configuration.

✧ Outlet connection extends beyond bottom flange.
✦ Heaviest section is upper section.
† Height includes fan guard which ships factory mounted.

Models: AT/UT/USS 228-5K26 to 228-5O26

Two-Cell Cooling Towers

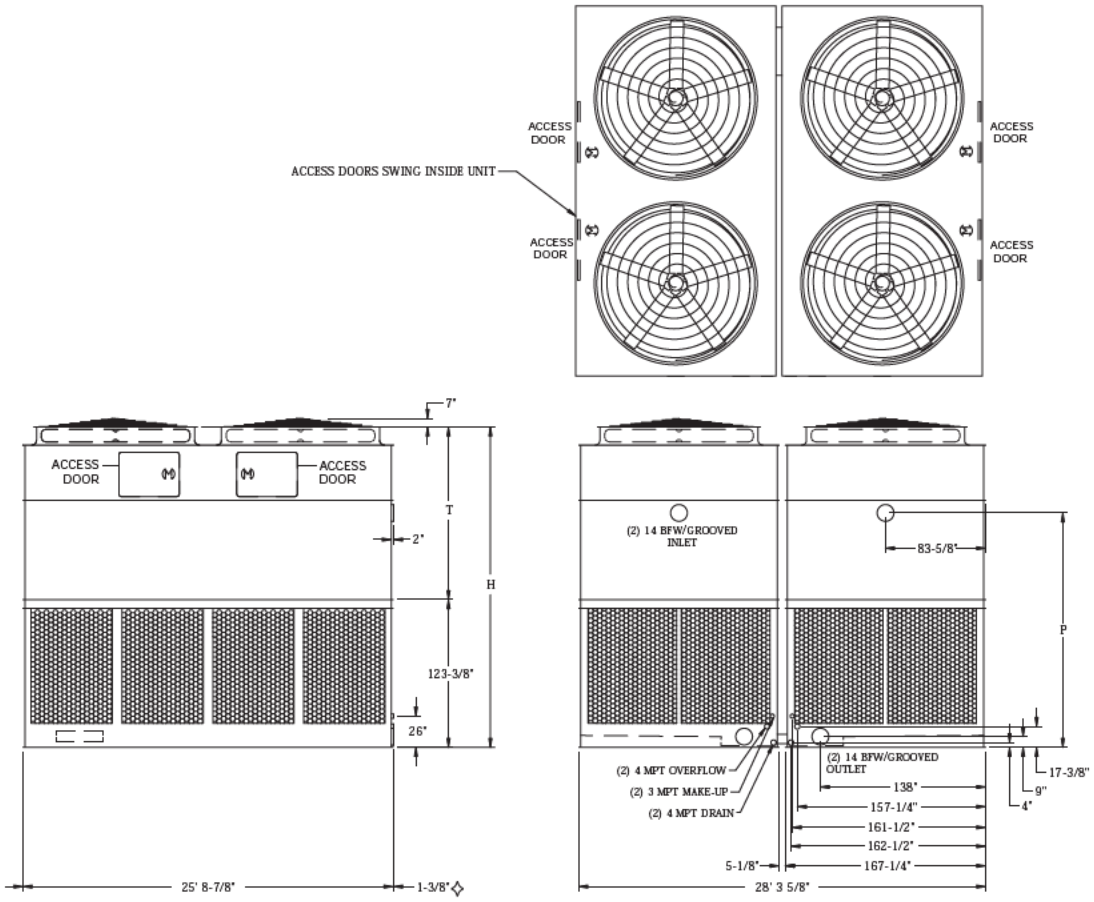

Model No.	Nominal Tonnage	WEIGHTS (LBS)			Fan Motor (HP)	Air Flow (CFM)	DIMENSIONS		
		Shipping	Operating	Heaviest Section✦			H†	T†	P
AT 228-5K26	1,963	48,560	82,220	17,660	(4) 20	392,000	22' 3-1/2"	12' 1/8"	16' 3-3/4"
AT 228-5L26	2,111	48,680	82,340	17,720	(4) 25	420,400	22' 3-1/2"	12' 1/8"	16' 3-3/4"
AT 228-5M26	2,236	48,880	82,540	17,820	(4) 30	445,100	22' 3-1/2"	12' 1/8"	16' 3-3/4"
AT 228-5N26	2,443	49,520	83,180	18,140	(4) 40	486,800	22' 3-1/2"	12' 1/8"	16' 3-3/4"
AT 228-5O26	2,613	49,560	83,220	18,160	(4) 50	521,700	22' 3-1/2"	12' 1/8"	16' 3-3/4"
SLSF Addition		4,800	4,800	1,200			1' 3-1/2"	1' 3-1/2"	

NOTE: (1) An adequately sized bleed line must be installed in the cooling tower system to prevent build-up of impurities in the recirculated water.
(2) Do not use catalog drawings for certified prints. Dimensions and weights are subject to change.
(3) Adequate spacing must be allowed for access to the cooling tower. Refer to EVAPCO's Equipment Layout Manual.
(4) Nominal Tonnage is based on 3 gpm per ton at 95 degree entering water temperature, 85 degree leaving water temperature, and 78 degree wet-bulb temperature.
(5) This box size is available in a dual fan/cell configuration.

✧ Outlet connection extends beyond bottom flange.
† Height includes fan guard which ships factory mounted.
✦ Heaviest section is upper section.

Models: AT/UT/USS 214-5K52 to 214-5O52

Two-Cell Cooling Towers

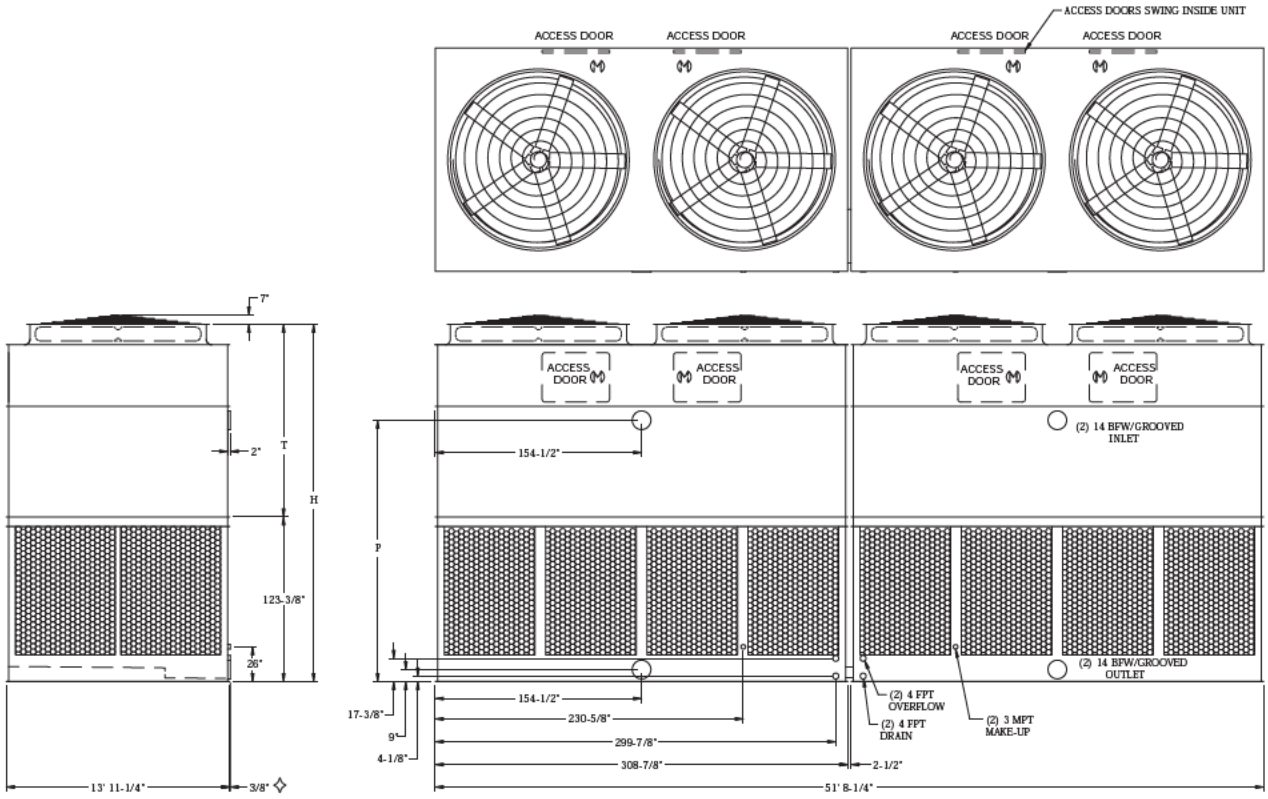

Model No.	Nominal Tonnage	WEIGHTS (LBS)			Fan Motor (HP)	Air Flow (CFM)	DIMENSIONS		
		Shipping	Operating	Heaviest Section✦			H†	T†	P
AT 214-5K52	1,971	48,840	82,500	17,660	(4) 20	393,500	22' 3-1/2"	12' 1/8"	16' 3-3/4"
AT 214-5L52	2,119	48,960	82,620	17,720	(4) 25	422,100	22' 3-1/2"	12' 1/8"	16' 3-3/4"
AT 214-5M52	2,245	49,160	82,820	17,820	(4) 30	446,800	22' 3-1/2"	12' 1/8"	16' 3-3/4"
AT 214-5N52	2,452	49,800	83,460	18,140	(4) 40	488,700	22' 3-1/2"	12' 1/8"	16' 3-3/4"
AT 214-5O52	2,622	49,840	83,500	18,160	(4) 50	523,700	22' 3-1/2"	12' 1/8"	16' 3-3/4"
SLSF Addition		4,800	4,800	1,200			1' 3-1/2"	1' 3-1/2"	

NOTE: (1) An adequately sized bleed line must be installed in the cooling tower system to prevent build-up of impurities in the recirculated water.
(2) Do not use catalog drawings for certified prints. Dimensions and weights are subject to change.
(3) Adequate spacing must be allowed for access to the cooling tower. Refer to EVAPCO's Equipment Layout Manual.
(4) Nominal Tonnage is based on 3 gpm per ton at 95 degree entering water temperature, 85 degree leaving water temperature, and 78 degree wet-bulb temperature.
(5) This box size is available in a dual fan/cell configuration.

✧ Outlet connection extends beyond bottom flange.
✦ Heaviest section is upper section.
† Height includes fan guard which ships factory mounted.

Models: AT/UT/USS 314-5K78 to 314-5O78

Three-Cell Cooling Towers

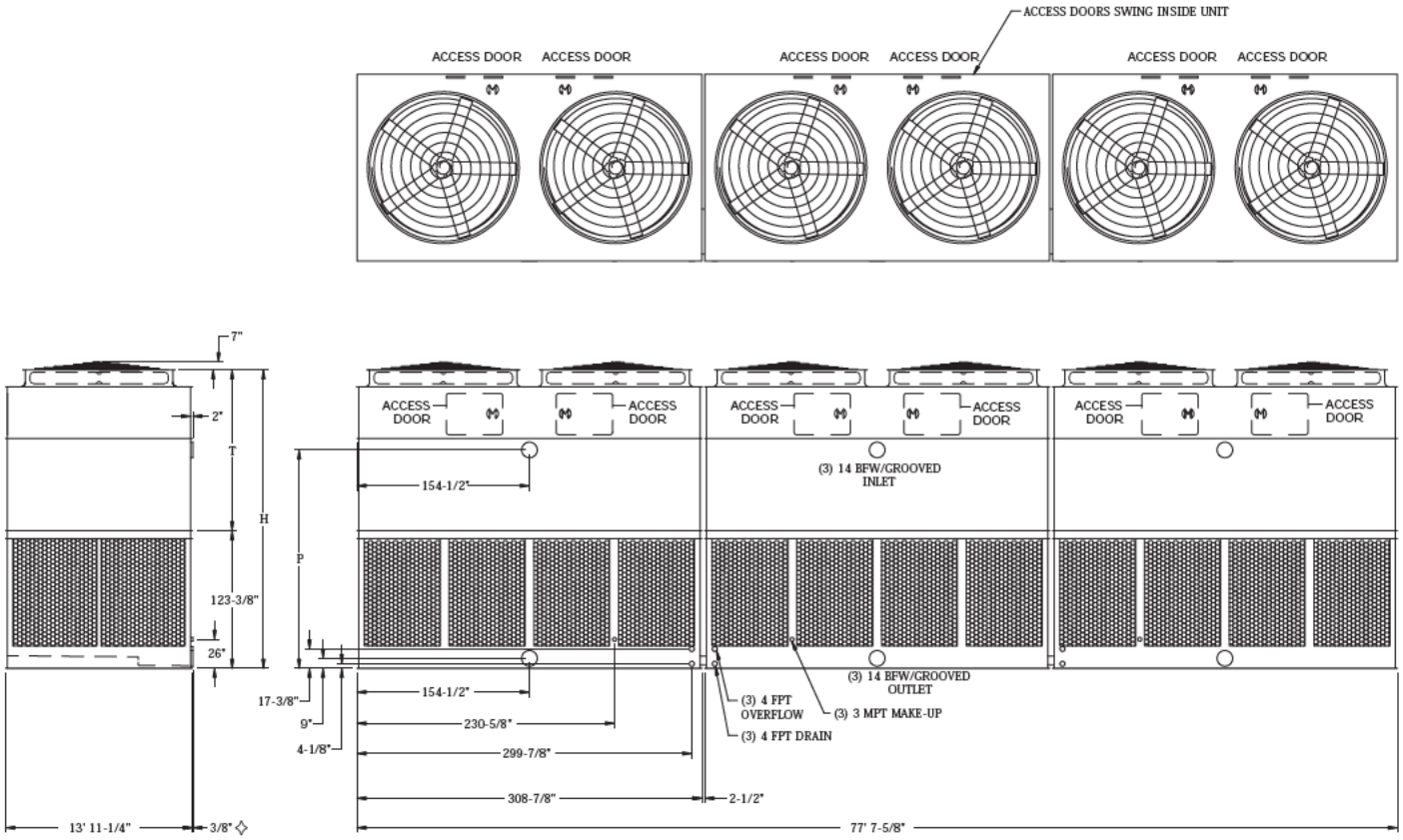

Model No.	Nominal Tonnage	WEIGHTS (LBS)			Fan Motor (HP)	Air Flow (CFM)	DIMENSIONS		
		Shipping	Operating	Heaviest Section✦			H†	T†	P
AT 314-5K78	2,936	73,050	123,540	17,660	(6) 20	586,300	22' 3-1/2"	12' 1/8"	16' 3-3/4"
AT 314-5L78	3,157	73,230	123,720	17,720	(6) 25	628,800	22' 3-1/2"	12' 1/8"	16' 3-3/4"
AT 314-5M78	3,344	73,530	124,020	17,820	(6) 30	665,700	22' 3-1/2"	12' 1/8"	16' 3-3/4"
AT 314-5N78	3,655	74,490	124,980	18,140	(6) 40	728,100	22' 3-1/2"	12' 1/8"	16' 3-3/4"
AT 314-5O78	3,908	74,550	125,040	18,160	(6) 50	780,300	22' 3-1/2"	12' 1/8"	16' 3-3/4"
SLSF Addition		3,600	3,600	1,200			1' 3-1/2"	1' 3-1/2"	

NOTE: (1) An adequately sized bleed line must be installed in the cooling tower system to prevent build-up of impurities in the recirculated water.
(2) Do not use catalog drawings for certified prints. Dimensions and weights are subject to change.
(3) Adequate spacing must be allowed for access to the cooling tower. Refer to EVAPCO's Equipment Layout Manual.
(4) Nominal Tonnage is based on 3 gpm per ton at 95 degree entering water temperature, 85 degree leaving water temperature, and 78 degree wet-bulb temperature.
(5) This box size is available in a dual fan/cell configuration.

✧ Outlet connection extends beyond bottom flange.
† Height includes fan guard which ships factory mounted.
✦ Heaviest section is upper section.

Models: AT/UT/USS 428-5K52 to 428-5O52

Four-Cell Cooling Towers

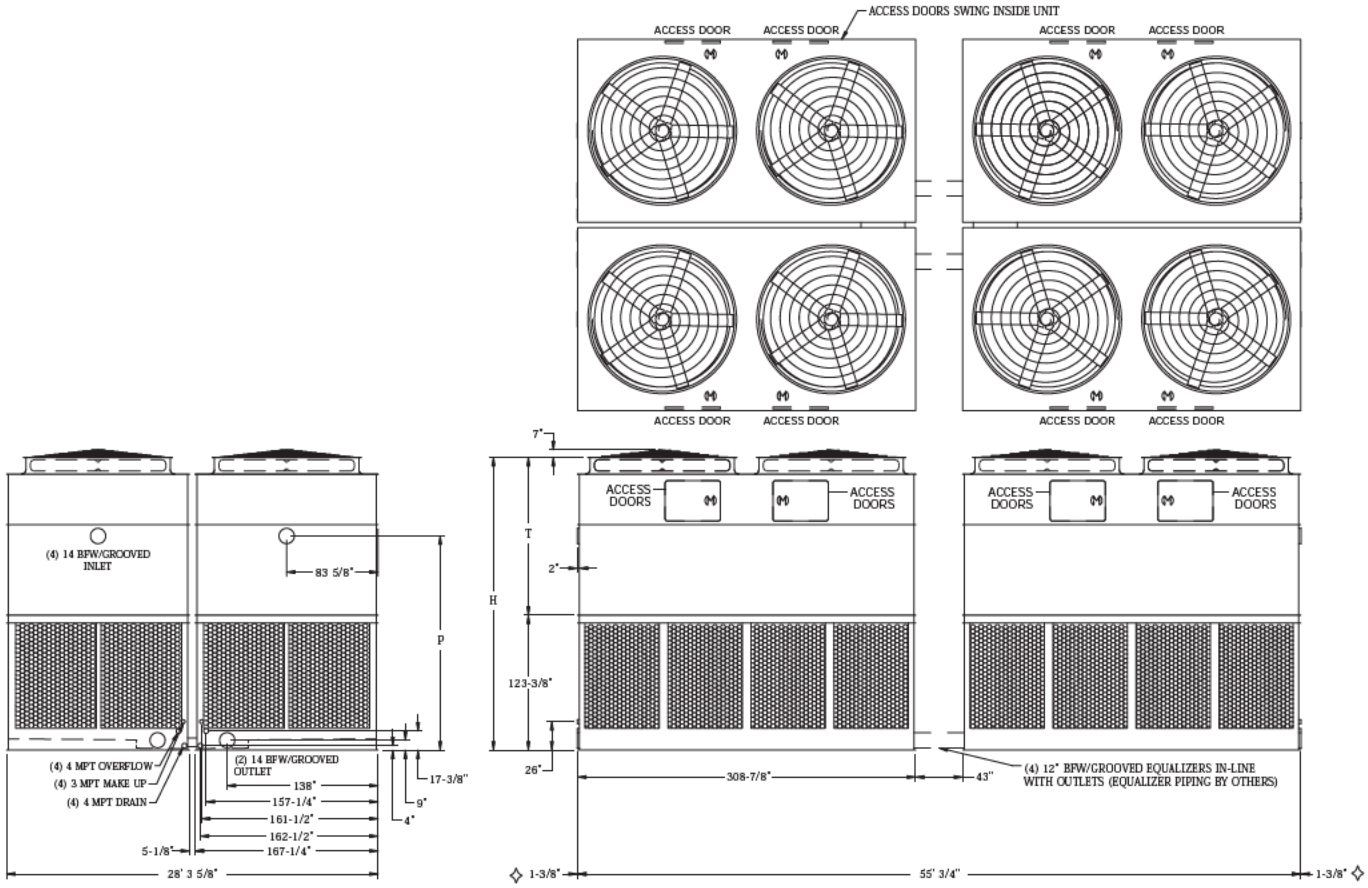

Model No.	Nominal Tonnage	WEIGHTS (LBS)			Fan Motor (HP)	Air Flow (CFM)	DIMENSIONS		
		Shipping	Operating	Heaviest Section✦			H†	T†	P
AT 428-5K52	3,857	97,200	164,520	17,660	(8) 20	746,200	22' 3-1/2"	12' 1/8"	16' 3-3/4"
AT 428-5L52	4,148	97,440	164,760	17,720	(8) 25	800,400	22' 3-1/2"	12' 1/8"	16' 3-3/4"
AT 428-5M52	4,395	97,840	165,160	17,820	(8) 30	847,500	22' 3-1/2"	12' 1/8"	16' 3-3/4"
AT 428-5N52	4,806	99,120	166,440	18,140	(8) 40	927,000	22' 3-1/2"	12' 1/8"	16' 3-3/4"
AT 428-5O52	5,141	99,200	166,520	18,160	(8) 50	993,400	22' 3-1/2"	12' 1/8"	16' 3-3/4"
SLSF Addition		9,600	9,600	1,200			1' 3-1/2"	1' 3-1/2"	

NOTE:
(1) An adequately sized bleed line must be installed in the cooling tower system to prevent build-up of impurities in the recirculated water.
(2) Do not use catalog drawings for certified prints. Dimensions and weights are subject to change.
(3) Adequate spacing must be allowed for access to the cooling tower. Refer to EVAPCO's Equipment Layout Manual.
(4) Nominal Tonnage is based on 3 gpm per ton at 95 degree entering water temperature, 85 degree leaving water temperature, and 78 degree wet-bulb temperature.
(5) This box size is available in a dual fan/cell configuration.

✧ Outlet connection extends beyond bottom flange.
† Height includes fan guard which ships factory mounted.
✦ Heaviest section is upper section.

Models: AT/UT/USS 456-5K26 to 456-5O26

Four-Cell Cooling Towers

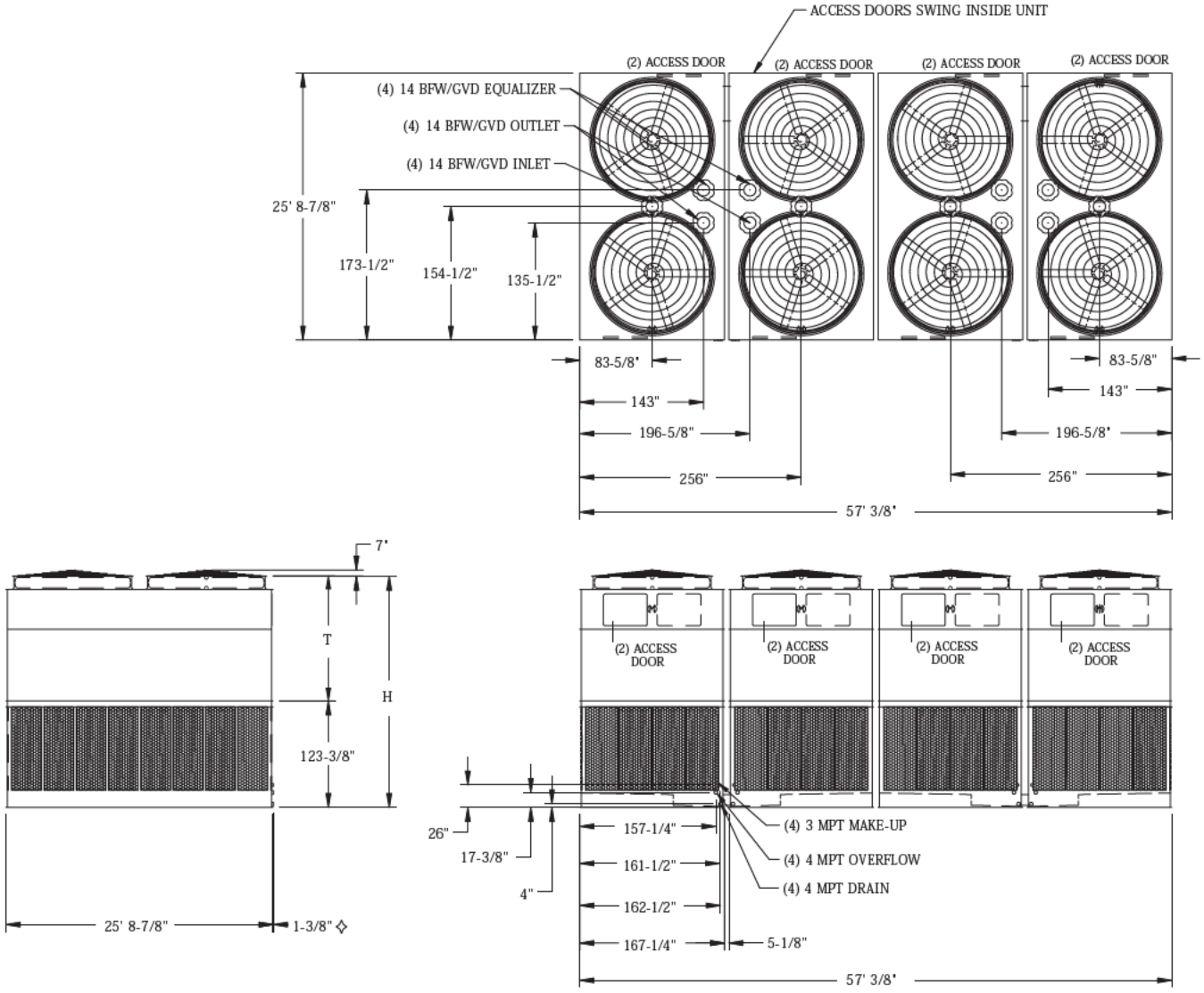

Model No.	Nominal Tonnage	WEIGHTS (LBS)			FanMotor (HP)	Air Flow (CFM)	DIMENSIONS	
		Shipping	Operating	Heaviest Section✦			H†	T†
AT 456-5K26	3,802	98,560	165,880	17,660	(8) 20	746,800	22' 3-1/2"	12' 1/8"
AT 456-5L26	4,090	98,800	166,120	17,720	(8) 25	801,100	22' 3-1/2"	12' 1/8"
AT 456-5M26	4,335	99,200	166,520	17,820	(8) 30	848,200	22' 3-1/2"	12' 1/8"
AT 456-5N26	4,743	100,480	167,800	18,140	(8) 40	927,900	22' 3-1/2"	12' 1/8"
AT 456-5O26	5,075	100,560	167,880	18,160	(8)5 0	994,400	22' 3-1/2"	12' 1/8"
SLSF Addition		9,600	9,600	1,200			1' 3-1/2"	1' 3-1/2"

NOTE: (1) An adequately sized bleed line must be installed in the cooling tower system to prevent build-up of impurities in the recirculated water.
(2) Do not use catalog drawings for certified prints. Dimensions and weights are subject to change.
(3) Adequate spacing must be allowed for access to the cooling tower. Refer to EVAPCO's Equipment Layout Manual.
(4) Nominal Tonnage is based on 3 gpm per ton at 95 degree entering water temperature, 85 degree leaving water temperature, and 78 degree wet-bulb temperature.

✧ Outlet connection extends beyond bottom flange.
† Height includes fan guard which ships factory mounted.
✦ Heaviest section is upper section.

Drain Down Volume for Remote Sump Applications

The following chart provides the maximum drain down volume allowable per AT/UT/USS model number. Use this chart when sizing indoor or outdoor remote sumps tanks. Remote sump applications are commonly used whenever a cooling tower is idle during sub-freezing weather to protect the water in the basin from freezing or for large multi-tower industrial applications. Either application allows the circulating water to gravity drain into a remote sump tank indoors or a large, outdoor concrete basin located underneath the cooling tower.

The water volume provided is the cooling tower portion of the remote sump tank only. The tank should allow for drain down water from external piping and pump suction coverage.

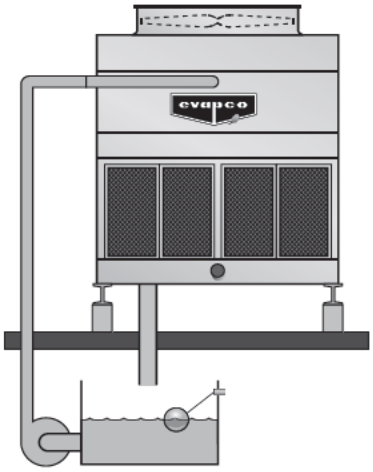

	Box SIze	Maximum Drain Down Volume (gal.)
1-CELL	4 x 4	85
	4 x 6	130
	4 x 9	195
	4 x 12	275
	8.5 x 6	270
	8.5 x 7.5	320
	8.5 x 9	395
	8.5 x 10.5	460
	8.5 x 12	525
	8.5 x 14	610
	10 x 12	645
	10 x 18	980
	12 x 12	720
	12 x 14	855
	12 x 18	1090
	12 x 20	1210
	14 x 24	1855
	14 x 26	2085

	Box SIze	Maximum Drain Down Volume (gal.)
2-CELL	6 x 17	540
	7.5 x 17	640
	12 x 9	540
	15 x 9	640
	17 x 9	790
	17 x 10.5	920
	17 x 12	1050
	17 x 14	1220
	8.5 x 18	790
	8.5 x 21	920
	8.5 x 24	1050
	8.5 x 28	1220
	10 x 24	1290
	10 x 36	1960
	12 x 24	1440
	12 x 28	1710
	12 x 36	2180
	12 x 40	2420
	14 x 48	3710
	14 x 52	4170
	20 x 12	1290
	20 x 18	1960
	24 x 18	2180
	24 x 20	2420
	28 x 24	3710
	28 x 26	4170
3-CELL	8.5 x 36	1575
	8.5 x 42	1830
	10 x 36	1935
	12 x 36	2160
	12 x 42	2565
	12 x 54	3270
	12 x 60	3630
	14 x 72	5565
	14 x 78	6255
	42 x 26	6255
4-CELL	24 x 24	2880
	24 x 28	3420
	24 x 36	4360
	24 x 40	4840
	28 x 48	7420
	28 x 52	8340
	56 x 26	8340

Optional Equipment: **Electric Basin Heaters**

Electric immersion heaters can be added to the basin of your Advanced Technology series cooling tower. They are sized to maintain a +40° F (4.5° C) pan water temperature with the fans and system pumps off. A thermostat and low-water protection device cycle the heater on when required and prevent the heater elements from energizing unless they are completely submerged. All components are protected by rugged, weatherproof enclosures for outdoor use.

AT/UT/USS Heater Sizes *

	Box Size	0°F kW	20°F kW	40°F kW
1-CELL	4 x 4 4 x 6 4 x 9 4 x 12	2 3 4 5	3 4 5 7	4 5 7 9
	7 x 9 7 x 12 7 x 18	6 (2) 4 (2) 6	8 (2) 6 (2) 8	12 (2) 8 (2) 12
	8.5 x 6 8.5 x 7.5 8.5 x 9 8.5 x 10.5 8.5 x 12 8.5 x 14	5 6 7 8 (2) 4 (2) 5	7 8 10 12 (2) 7 (2) 7	9 12 15 15 (2) 9 (2) 10
	10 x 12 10 x 18	(2) 5 (2) 7	(2) 8 (2) 12	(2) 10 (2) 15
	12 x 12 12 x 14 12 x 18 12 x 20	(2) 6 (2) 7 (2) 9 (2) 10	(2) 9 (2) 10 (2) 15 (2) 15	(2) 12 (2) 15 (2) 18 (3) 15
	14 x 24 14 x 26	(2) 16 (2) 16	(3) 16 (3) 16	(3) 20 (3) 20
2-CELL	6 x 17	(2) 5	(2) 7	(2) 9
	7 x 24 7 x 36	(4) 4 (4) 6	(4) 6 (4) 8	(4) 8 (4) 12
	7.5 x 17	(2) 6	(2) 8	(2) 12
	8.5 x 18 8.5 x 21 8.5 x 24 8.5 x 28	(2) 6 (2) 7 (4) 4 (4) 5	(2) 9 (2) 12 (4) 7 (4) 7	(2) 12 (2) 15 (4) 9 (4) 10
	10 x 24 10 x 36	(4) 5 (4) 7	(4) 8 (4) 12	(4) 10 (4) 15
	12 x 8.5 12 x 24 12 x 28 12 x 36 12 x 40	(2) 5 (4) 6 (4) 7 (4) 9 (4) 10	(2) 7 (4) 9 (4) 10 (4) 15 (4) 15	(2) 9 (4) 12 (4) 15 (4) 18 (4) 20
	14 x 48 14 x 52	(4) 16 (4) 16	** **	** **
	14 x 9 14 x 12 14 x 18	(2) 6 (4) 4 (4) 6	(2) 8 (4) 6 (4) 8	(2) 12 (4) 8 (4) 12
	15 x 8.5	(2) 6	(2) 8	(2) 12
	17 x 9 17 x 10.5 17 x 12 17 x 14	(2) 7 (2) 8 (4) 4 (4) 5	(2) 10 (2) 12 (4) 7 (4) 7	(2) 15 (2) 15 (4) 9 (4) 10
	20 x 12 20 x 18	(4) 5 (4) 7	(4) 8 (4) 12	(4) 10 (4) 15
	24 x 18 24 x 20	(4) 9 (4) 10	(4) 15 (4) 15	(4) 18 (4) 20
	28 x 24 28 x 26	(4) 16 (4) 16	** **	** **

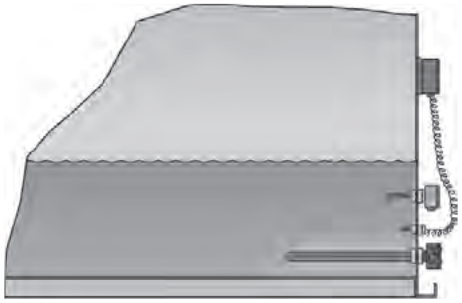

Note: Heater control packages that include contactor, transformer or disconnects are also available; speak to your local EVAPCO representative to learn more about these options.

AT/UT/USS Heater Sizes *

	Box Size	0°F kW	20°F kW	40°F kW
3-CELL	8.5 x 36 8.5 x 42	(6) 4 (6) 5	(6) 7 (6) 7	(6) 9 (6) 10
	10 x 36	(6) 5	(6) 8	(6) 10
	12 x 36 12 x 42 12 x 54 12 x 60	(6) 6 (6) 7 (6) 9 (6) 10	(6) 9 (6) 10 (6) 15 (6) 15	(6) 12 (6) 15 (6) 18 (9) 15
	14 x 72 14 x 78 42 x 26	(6) 16 (6) 16 (6) 16	** ** **	** ** **
4-CELL	24 x 24 24 x 28 24 x 36 24 x 40	(4) 12 (4) 15 (4) 18 (4) 20	(4) 18 (4) 20 (6) 18 (6) 20	(6) 15 (6) 18 (8) 18 (8) 20
	28 x 48 28 x 52 56 x 26	(8) 16 (8) 16 (8) 16	** ** **	** ** **

** Electric heater selection based on ambient air temperature shown.*
*** Consult factory*

Low Sound Fan – 4-7 dB(A) Reduction

Ideal for sound-sensitive applications, EVAPCO's low sound fan features a wide chord blade and a unique soft-connect blade-to-hub design that is compatible with variable speed drives. Since the blades are not rigidly connected to the fan hub, no vertical vibration forces are transmitted to the unit structure. This reduces sound pressure levels by 4 to 7 dB(A), depending on specific unit selection and measurement location.



The fan is a high efficiency axial propeller and is CTI certified on Advanced Technology series cooling towers. It has a thermal performance derate of 3.5%. Consult your EVAPCO representative for actual thermal performance. *Note: Available on AT and USS models only.*

Additional Height & Operating Weight Additions

	Box Size	Height Addition for Low Sound Fan (in.)	Operating Weight Addition for Low Sound Fan (lbs.)
1-CELL	4 x 4	0	0
	4 x 6	0	0
	4 x 9	0	0
	4 x 12	0	0
	7 x 9	4	0
	7 x 12	4	0
	7 x 18	4	0
	8.5 x 6	4	0
	8.5 x 7.5	4	0
	8.5 x 9	4	0
	8.5 x10.5	4	0
	8.5 x 12	4	0
	8.5 x 14	4	0
	10 x 12	0	0
	10 x 18	0	0
	12 x 12	0	0
	12 x 14	0	0
	12 x 18	7	225
	12 x 20	7	225
	14 x 24	5	450
	14 x 26	7	450
2-CELL	6 x 17	4	0
	7 x 24	4	0
	7 x 36	4	0
	7.5 x 17	4	0
	8.5 x 18	4	0
	8.5 x 21	4	0
	8.5 x 24	4	0
	8.5 x 28	4	0
	10 x 24	0	0
	10 x 36	0	0
	12 x 8.5	4	0
	12 x 24	0	0
	12 x 28	0	0
	12 x 36	7	450
	12 x 40	7	450
	14 x 48	5	900
	14 x 52	7	900

	Box Size	Height Addition for Low Sound Fan (in.)	Operating Weight Addition for Low Sound Fan (lbs.)
2-CELL	14 x 9	4	0
	14 x 12	4	0
	14 x 18	4	0
	15 x 8.5	4	0
	17 x 9	4	0
	17 x 10.5	4	0
	17 x 12	4	0
	17 x 14	4	0
	20 x 12	0	0
	20 x 18	0	0
	24 x 18	7	450
	24 x 20	7	450
	28 x 24	5	900
	28 x 26	7	900
3-CELL	8.5 x 36	4	0
	8.5 x 42	4	0
	10 x 36	0	0
	12 x 36	0	0
	12 x 42	0	0
	12 x 54	7	675
	12 x 60	7	675
	14 x 72	5	1,350
	14 x 78	7	1,350
	42 x 26	7	1,350
4-CELL	24 x 24	0	0
	24 x 28	0	0
	24 x 36	7	900
	24 x 40	7	900
	28 x 48	5	1,800
	28 x 52	7	1,800
	56 x 26	7	1,800

Structural Steel Support

Models AT/UT/USS 14-2E4 to 314-5078

Suggested Two I-Beam Arrangement

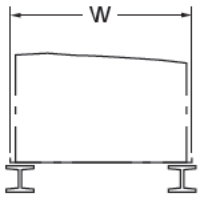

End Elevation

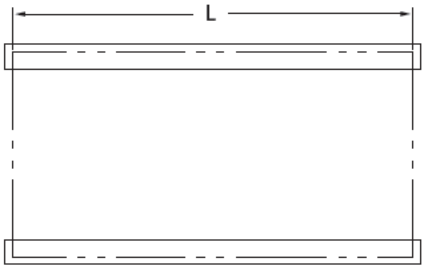

Plan View

Box Sizes 4′ x 4′ through 8.5′ x 18′

Two I-Beams Required (By Others)

	Box Size	Dimensions	
		W	L
1-CELL	4 x 4	4′ 0-15/32″	3′ 11-5/8″
	4 x 6	4′ 0-15/32″	5′ 11-5/8″
	4 x 9	4′ 0-15/32″	8′ 11-11/16″
	4 x 12	4′ 0-15/32″	11′ 11-5/8″
	7 x 9	7 '4"	8' 11-1/2"
	7 x 12	7' 4"	11' 11-3/4"
	7 x 18	7' 4"	18' 0"
	8.5 x 6	5′ 11-7/8″	8′ 5-1/2″
	8.5 x 7.5	7′ 5-7/8″	8′ 5-1/2″
	8.5 x 9	8′ 5-1/2″	8′ 11-1/2″
	8.5 x 10.5	8′ 5-1/2″	10′ 5-1/2″
	8.5 x 12	8′ 5-1/2″	11′ 11-3/4″
	8.5 x 14	8′ 5-1/2″	13′ 11-3/4″
	10 x 12	9′ 9-3/4″	11′ 11-3/4″
	10 x 18	9′ 9-3/4″	18′ 0″
	12 x 12	11′ 10″	11′ 11-3/4″
	12 x 14	11′ 10″	13′ 11-3/4″
	12 x 18	11′ 10″	18′ 0″
	12 x 20	11′ 10″	20′ 0″
	14 x 24	13′ 11-1/4″	23′ 9″
	14 x 26	13′ 11-1/4″	25′ 8-7/8″
2-CELL	6 x 17	5′ 11-7/8″	17′ 1-1/2″
	7.5 x 17	7′ 5-7/8″	17′ 1-1/2″
	8.5 x 18	8′ 5-1/2″	18′ 0″

Box Sizes 8.5′ x 21′ through 14′ x 78′

Two I-Beams Required (By Others)

	Box Size	Dimensions	
		W	L
2-CELL	7 x 24	7' 4"	24' 2"
	7 x 36	7' 4"	36' 2-1/2"
	8.5 x 21	8′ 5-1/2″	21′ 0″
	8.5 x 24	8′ 5-1/2″	24′ 2″
	8.5 x 28	8′ 5-1/2″	28′ 2″
	10 x 24	9′ 9-3/4″	24′ 2″
	10 x 36	9′ 9-3/4″	36′ 2-1/2″
	12 x 24	11′ 10″	24′ 2″
	12 x 28	11′ 10″	28′ 2″
	12 x 36	11′ 10″	36′ 2-1/2″
	12 x 40	11′ 10″	40″ 2-1/4″
	14 x 48	13′ 11-1/4″	47′ 8-1/2″
	14 x 52	13′ 11-1/4″	51″ 8-1/4″
3-CELL	8.5 x 36	8′ 5-1/2″	36′ 4-1/4″
	8.5 x 42	8′ 5-1/2″	42′ 4-1/4″
	10 x 36	9′ 9-3/4″	36′ 4-1/4″
	12 x 36	11′ 10″	36′ 4-1/4″
	12 x 42	11′ 10″	42′ 4-1/4″
	12 x 54	11′ 10″	54′ 5″
	12 x 60	11′ 10″	60′ 5″
	14 x 72	13′ 11-1/4″	71′ 8″
	14 x 78	13′ 11-1/4″	77′ 7-5/8″

Notes:

Models Listed Above.

1. These are suggested arrangements for preliminary layout purposes. Consult your EVAPCO representative for factory certified steel support drawings.
2. The recommended support for the AT/UT/USS Cooling Tower is structural I-beams located under the outer flanges and running the entire length of the unit. The unit should be elevated to allow access underneath the unit and to the roof below. Mounting holes, 3/4" in diameter, are located in the bottom flanges of the pan to provide for bolting to the structural steel.
3. Beams should be sized in accordance with accepted structural practices. Maximum deflection of beam under unit to be 1/360 of the unit length, not to exceed 1/2".
4. For these models where two support beams are required, deflection may be calculated by using 55% of the operating weight as a uniform load on each beam.
5. Beams should be level before setting the unit in place. Do not level the unit by shimming between it and the I-beams.
6. Support beams and Anchor bolts are to be furnished by others.
7. Dimensions, weights and data are subject to change without notice. Refer to the factory certified drawings for exact dimensions.
8. For alternate layout arrangements please consult the factory. *NOTE: OPTIONAL BOTTOM CONNECTIONS WILL REQUIRE THE UNIT TO BE ELEVATED TO ALLOW FOR PIPING.*

Structural Steel Support

Models AT/UT/USS 212-2G9 to 428-5O52

Suggested Three I-Beam Arrangement

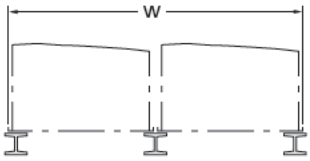

End Elevation

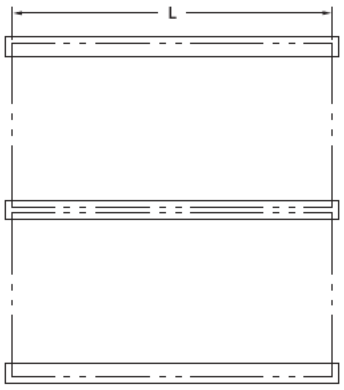

Plan View

Box Sizes 12′ x 7.5′ through 28′ x 52′

Three I-Beams Required (By Others)

	Box Size	Dimensions	
		W	L
2-CELL	12 x 8.5	12′ 4-7/8″	8′ 5-1/2″
	14 x 9	15' 1-1/8"	8' 11-1/2"
	14 x 12	15' 1-1/8"	11' 11-3/4"
	14 x 18	15' 1-1/8"	18' 0"
	15 x 7.5	15′ 4-7/8″	8′ 5-1/2″
	17 x 9	17′ 4-1/8″	8′ 11-1/2″
	17 x 10.5	17′ 4-1/8″	10′ 5-1/2″
	17 x 12	17′ 4-1/8″	11′ 11-3/4″
	17 x 14	17′ 4-1/8″	13′ 11-3/4″
	20 x 12	20′ 0-5/8″	11′ 11-3/4″
	20 x 18	20′ 0-5/8″	18′ 0″
	24 x 18	24′ 1-1/8″	18′ 0″
	24 x 20	24′ 1-1/8″	20′ 0″
	28 x 24	28′ 3-5/8″	23′ 9″
	28 x 26	28′ 3-5/8″	25′ 8-7/8″
4-CELL	24 x 24	24′ 1-1/8″	24′ 1-3/4″
	24 x 28	24′ 1-1/8″	28′ 1-3/4″
	24 x 36	24′ 1-1/8″	36′ 2-1/4″
	24 x 40	24′ 1-1/8″	40′ 2-1/4″
	28 x 48	28′ 3-5/8″	51′ 1″
	28 x 52	28′ 3-5/8″	55′ 3/4″

Notes:

Models Listed Above.

1. These are suggested arrangements for preliminary layout purposes. Consult your EVAPCO representative for factory certified steel support drawings.
2. The recommended support for the AT/UT/USS Cooling Tower is structural I-beams located under the outer flanges and running the entire length of the unit. The unit should be elevated to allow access underneath the unit and to the roof below. Mounting holes, 3/4" in diameter are located in the bottom flanges of the pan to provide for bolting to the structural steel.
3. Beams should be sized in accordance with accepted structural practices. Maximum deflection of beam under unit to be 1/360 of the unit length, not to exceed 1/2".
4. For these models only where three support beams are required, deflection may be calculated using 56% of the operating weight on the CENTER BEAM and 22% on each OUTBOARD beam.
5. Beams should be level before setting the unit in place. Do not level the unit by shimming between it and the I-beams.
6. Support beams and Anchor bolts are to be furnished by others.
7. Dimensions, weights and data are subject to change without notice. Refer to the factory certified drawings for exact dimensions.
8. For alternate layout arrangements please consult the factory. NOTE: OPTIONAL BOTTOM CONNECTIONS WILL REQUIRE THE UNIT TO BE ELEVATED TO ALLOW FOR PIPING.

Structural Steel Support

Models AT/UT/USS 342-5K26 to 342-5O26
Suggested Four I-Beam Arrangement

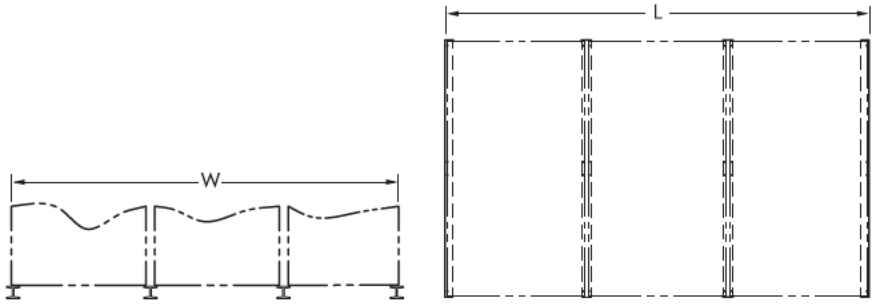

End Elevation Plan View

Models AT/UT/USS 456-5K26 to 456-5O26
Suggested Five I-Beam Arrangement

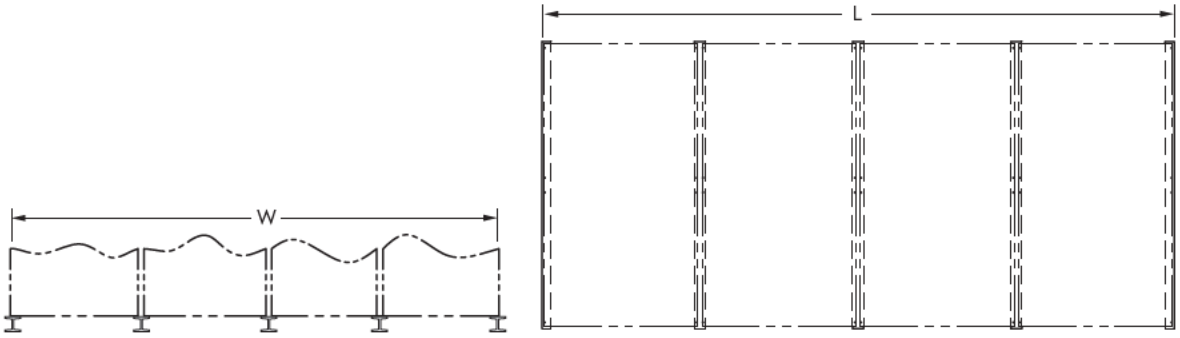

End Elevation Plan View

Box Size 42' x 26' through 56' x 26'

I-Beams Required (By Others)

Dimensions		
Box Size	**W**	**L**
42 x 26	42' 8"	25' 8-7/8"
56 x 26	57' 3/8"	25' 8-7/8"

Notes:

Models Listed Above.

1. These are suggested arrangements for preliminary layout purposes. Consult your EVAPCO representative for factory certified steel support drawings.
2. The recommended support for the AT/UT/USS Cooling Tower is structural I-beams located under the outer flanges and running the entire length of the unit. The unit should be elevated to allow access underneath the unit and to the roof below. Mounting holes, 3/4" in diameter are located in the bottom flanges of the pan to provide for bolting to the structural steel.
3. Beams should be sized in accordance with accepted structural practices. Maximum deflection of beam under unit to be 1/360 of the unit length, not to exceed 1/2".
4. For these models only where four or five support beams are required, deflection may be calculated using 56% of the operating weight on the CENTER BEAMS and 22% on each OUTBOARD beam.
5. Beams should be level before setting the unit in place. Do not level the unit by shimming between it and the I-beams.
6. Support beams and Anchor bolts are to be furnished by others.
7. Dimensions, weights and data are subject to change without notice. Refer to the factory certified drawings for exact dimensions.
8. For alternate layout arrangements please consult the factory. *NOTE: OPTIONAL BOTTOM CONNECTIONS WILL REQUIRE THE UNIT TO BE ELEVATED TO ALLOW FOR PIPING.*

Applications

Design
EVAPCO Cooling towers are of heavy-duty construction and designed for long trouble-free operation. Proper equipment selection, installation and maintenance are necessary to ensure full unit performance while maximizing the equipment's service life. Some of the major considerations in the application of a tower are presented below. For additional information, please contact the factory.

Piping
Cooling tower piping should be designed and installed in accordance with generally accepted engineering practices. All piping should be anchored by properly designed hangers and supports with allowance made for possible expansion and contraction. No external loads should be placed upon cooling tower connections, nor should any of the piping supports be anchored to the unit framework.

The piping connection locations shown on the drawings included in this catalog and on the website are standard locations that can be changed. If the piping connection locations shown do not meet the needs of a particular project, contact the factory to determine a viable solution.

Air Circulation
In reviewing the system design and unit location, it is important that enough fresh air is provided to enable proper unit performance. The best location is on an unobstructed roof top or at ground level away from walls and other barriers. Care must be taken when locating towers in wells or enclosures or next to high walls. The potential for recirculation of the hot, moist discharge air back into the fan intake exists. Recirculation raises the wetbulb temperature of the entering air, causing the leaving water temperature to rise above the design conditions. For these cases, the overall unit height should be raised so it is even with the adjacent wall, reducing the chance of recirculation. This can be done by raising the entire unit or adding a discharge hood. For additional information, see the EVAPCO Equipment Layout Manual. Engineering Assistance is also available from the factory to identify potential recirculation problems and recommend solutions, such as re-orienting multi-cell units.

Design Flexibility and Assistance
The large number of EVAPCO AT Cooling towers makes it easy to find a model to meet your design and layout needs. If there is an application for which the standard catalog product line does not work, EVAPCO will make a cooling tower that will fit your requirement. Consult your local EVAPCO Representative or the factory for assistance with Applications, Layout, Accessories or other design needs.

Water Treatment
Proper water treatment is an essential part of the maintenance required for all evaporative cooling equipment. A well designed and consistently implemented water treatment program will help to ensure efficient system operation while maximizing the equipment's service life. A qualified water treatment company should design a site specific water treatment protocol based on equipment (including all metallurgies in the cooling system), location, makeup water quality and usage.

Without proper water treatment, the equipment can be susceptible to scale build-up on its heat exchange surfaces, biological growth in the recirculating water and corrosion of its components. Your site specific water treatment protocol should include procedures for routine operation, startup after a shut-down period, and system lay-up, if applicable.

Passivation Period
If the equipment includes any galvanized components, the initial commissioning and passivation period is a critical time for maximizing the service life of galvanized equipment. Evapco recommends that a site specific water treatment protocol which includes a passivation procedure that details the desired water chemistry and visual inspections during the first six to twelve weeks of operation be used. During this passivation period, recirculating water pH should be maintained above 7.0 and below 8.0 at all times.

Recirculating Water System
The cooling in a tower is accomplished by the evaporation of a portion of the recirculated spray water. As this water evaporates, it leaves behind mineral content and impurities. Therefore, it is important to bleed-off an amount of water proportional to that which is evaporated to prevent the buildup of impurities. If this is not done, the mineral content and/or the corrosive nature of the water will continue to increase. This can ultimately result in heavy scaling or a corrosive condition.

Bleed off
Evaporative cooling equipment requires a bleed or blow-down line to remove concentrated water from the system. The mineral concentration is monitored by measuring the conductivity of the water. Evapco recommends an automated conductivity controller to maximize the water efficiency of your system. Based on recommendations from your water treatment supplier, the conductivity controller should open and close a bleed valve to maintain the conductivity of the recirculating water.

Control of Biological Contaminants
Evaporative cooling equipment should be inspected regularly to ensure good microbiological control. Inspections should include both monitoring of microbial populations via culturing techniques and visual inspections for evidence of biofouling. Poor microbiological control can result in loss of heat transfer efficiency, increase corrosion potential, and increase the risk of pathogens such as those that can cause risk to health. If excessive microbiological contamination is detected, a more aggressive mechanical cleaning and/or water treatment program should be undertaken.

Sample Mechanical Specification

SECTION 23 65 00 COOLING TOWERS

Below specification applies for a base AT unit with no options or accessories selected. For a copy of a dynamic specification, please contact your EVAPCO Sales Representative for access to EVAPCO's ***SPECTRUM*** selection software.

PART 1 GENERAL

1.1 RELATED DOCUMENTS

A. Drawings and general provisions of the Contract, including General and Supplementary Conditions and Division 01 Specification Sections, apply to this Section.

1.2 SUMMARY

A. This Section includes factory assembled and tested, open circuit mechanical induceddraft vertical discharge cooling tower.

1.3 SUBMITTALS

A. Product Data: For each type of product indicated. Include rated capacities, pressure drop, performance curves with selected points indicated, furnished specialties, and accessories.

B. Shop Drawings: Complete set of manufacturer's prints of equipment assemblies, control panels, sections and elevations, and unit isolation. Include the following:

1. Assembled unit dimensions.
2. Weight and load distribution.
3. Required clearances for maintenance and operation.
4. Sizes and locations of piping and wiring connections.
5. Wiring Diagrams: For power, signal, and control wiring. Differentiate between manufacturer installed and field installed wiring.

C. Operation and Maintenance Data: Each unit to include operation and maintenance manual.

1.4 QUALITY ASSURANCE

A. Verification of Performance:

1. The thermal performance shall be certified by the Cooling Technology Institute in accordance with CTI Certification Standard STD-201. Lacking such certification, a field acceptance test shall be conducted within the warranty period in accordance with CTI Acceptance Test Code ATC-105, by a Certified CTI Thermal Testing Agency. The Evaporative Heat Rejection Equipment shall comply with the energy efficiency requirements of ASHRAE Standard 90.1.
2. Unit Sound Performance ratings shall be tested according to CTI ATC-128 standard. Sound ratings shall not exceed specified ratings.

B. Unit shall meet or exceed energy efficiency per ASHRAE 90.1

1.5 WARRANTY

A. Submit a written warranty executed by the manufacturer, agreeing to repair or replace components of the unit that fail in materials and workmanship within the specified warranty period.

1. The Entire Unit shall have a comprehensive one (1) year warranty against defects in materials and workmanship from startup, not to exceed eighteen (18) month from shipment of the unit.
2. Fan Motor/Drive System: Warranty Period shall be Five (5) years from date of unit shipment from Factory (fan motor(s), fan(s), bearings, mechanical support, sheaves, bushings and belt(s)).

PART 2 PRODUCTS

2.1 MANUFACTURERS

A. Manufacturers: Subject to compliance with requirements, provide cooling towers manufactured by one of the following:

1. EVAPCO Model AT _____
2. Approved Substitute

2.2 THERMAL PERFORMANCE

A. Each unit shall be capable to cool _____ GPM of water entering at _____° F leaving at _____° F at a design wet bulb of _____° F.

2.3 IBC COMPLIANCE

A. The unit structure shall be designed, analyzed, and constructed in accordance with the latest edition of International Building Code (IBC) for: IP = 1.0, SDS = 1.34; z/h = 0, P = 119 psf.

2.4 COMPONENTS

A. Description: Factory assembled and tested, induced draft counter flow cooling tower complete with fan, fill, louvers, accessories and rigging supports

B. Materials of Construction

1. All cold water basin components including vertical supports, air inlet louver frames and panels up to rigging seam shall be constructed of heavy gauge mill hot-dip galvanized steel.
2. Upper Casing, channels and angle supports shall be constructed of heavy gauge mill hot-dip galvanized steel. Fan cowl and guard shall be constructed of galvanized steel. All galvanized steel shall be coated with a minimum of 2.35 ounces of zinc per square foot of area (G-235 Hot-Dip Galvanized Steel designation). During fabrication, all galvanized steel panel edges shall be coated with a 95% pure zinc-rich compound.

C. Fan(s):

1. Fan(s) shall be high efficiency axial propeller type with aluminum wide chord blade construction. Each fan shall be dynamically balanced and installed in a closely fitted cowl with venturi air inlet for maximum fan efficiency.

D. Drift Eliminators

1. Drift eliminators shall be constructed entirely of Polyvinyl Chloride (PVC) in easily handled sections. Design shall incorporate three changes in air direction and limit the water carryover to a maximum of 0.001% of the recirculating water rate.

E. Water Distribution System

1. Spray nozzles shall be precision molded ABS, large orifice nozzles utilizing fluidic technology for superior water distribution over the fill media. Nozzles shall be designed to minimize water distribution system maintenance. Spray header and branches shall be Schedule 40 Polyvinyl Chloride (PVC) for corrosion resistance with a steel connection to attach external piping.

F. Heat Transfer Media

1. Fill media shall be constructed of Polyvinyl Chloride (PVC) of cross-fluted design and suitable for inlet water temperatures up to 130° F. The bonded block fill shall be bottom supported and suitable as an internal working platform. Fill shall be self-extinguishing, have a flame spread of 5 under A.S.T.M. designation E-84-81a, and shall be resistant to rot, decay and biological attack.

G. Air Inlet Louvers

1. The air inlet louver screens shall be constructed from UV inhibited polyvinyl chloride (PVC) and incorporate a framed interlocking design that allows for easy removal of louver screens for access to the entire basin area for maintenance. The louver screens shall have a minimum of two changes in air direction and shall be of a non-planar design to prevent splash-out and block direct sunlight & debris from entering the basin.

H. Make up Float Valve Assembly

1. Make up float assembly shall be a mechanical brass valve with an adjustable plastic float.

I. Pan Strainer

1. Pan Strainer(s) shall be all Type 304 Stainless Steel construction with large area removable perforated screens.

2.5 MOTORS AND DRIVES

A. General requirements for motors are specified in Division 23 Section "Motors"

B. Fan Motor

1. Fan motor(s) shall be totally enclosed, ball bearing type electric motor(s) suitable for moist air service. Motor(s) are Premium Efficient, Class F insulated, 1.15 service factor design. Inverter rated per NEMA MG1 Part 31.4.4.2 and suitable for variable torque applications and constant torque speed range with properly sized and adjusted variable frequency drives.

2. Fan motor(s) shall include strip-type space heaters with separate leads brought to the motor conduit box.

C. Fan Drive

1. The fan drive shall be multigroove, solid back V-belt type with QD tapered bushings designed for 150% of the motor nameplate power. The belt material shall be neoprene reinforced with polyester cord and specifically designed for evaporative equipment service. Fan sheave shall be aluminum alloy construction. Belt adjustment shall be accomplished from the exterior of the unit.

D. Fan Shaft

1. Fan shaft shall be solid, ground and polished steel. Exposed surface shall be coated with rust preventative.

E. Fan Shaft Bearings

1. Fan Shaft Bearings shall be heavy-duty, self-aligning ball type bearings with extended lubrication lines to grease fittings located on access door frame. Bearings shall be designed for a minimum L-10 life of 100,000 hours.

2.6 MAINTENANCE ACCESS

A. Fan Section

1. Access door shall be hinged and located in the fan section for fan drive and water distribution system access.

B. Basin Section

1. Framed removable louver panels shall be on all four (4) sides of the unit for pan and sump access.

C. Internal Working Platform

1. Internal working platform shall provide easy access to the fans, belts, motors, sheaves, bearings, all mechanical equipment and complete water distribution system. The fill shall be an acceptable means of accessing these components.

D. Louver Access Door

1. Hinged access door in louver shall be provided.

NOTES:

OUR PRODUCTS ARE MANUFACTURED WORLDWIDE.



EVAPCO, Inc. — World Headquarters & Research / Development Center

P.O. Box 1300 • Westminster, MD 21158 USA
410-756-2600 p • marketing@evapco.com • **evapco.com**

North America

EVAPCO, Inc.
World Headquarters
P.O. Box 1300
Westminster, MD 21158 USA
410 756 2600 p | 410 756 6450 f
marketing@evapco.com

EVAPCO East
5151 Allendale Lane
Taneytown, MD 21787 USA
410-756-2600 p | 410-756-6450 f
marketing@evapco.com

EVAPCO East
Key Building
Taneytown, MD USA
410-756-2600 p
marketing@evapco.com

EVAPCO Midwest
Greenup, IL USA
217-923-3431 p
evapcomw@evapcomw.com

EVAPCO West
Madera, CA USA
559-673-2207 p
contact@evapcowest.com

EVAPCO Iowa
Lake View, IA USA
712-657-3223 p

EVAPCO Iowa
Sales & Engineering
Medford, MN USA
507-446-8005 p
evapcomn@evapcomn.com

EVAPCO Newton
Newton, IL USA
618-783-3433 p
evapcomw@evapcomw.com

EVAPCOLD
Greenup, IL USA
217-923-3431 p
evapcomw@evapcomw.com

EVAPCO-BLCT Dry Cooling, Inc.
1011 US Highway 22 West
Bridgewater, NJ 08807 USA
Phone: 1-908-379-2665
E-mail: info@evapco-blct.com

EVAPCO-BLCT Dry Cooling, Inc.
7991 Shaffer Parkway
Littleton, CO 80127 USA
Phone: 1-908-379-2665
E-mail: info@evapco-blct.com
Spare Parts Phone: 908-895-3236
Spare Parts e-mail: spares@evapco-blct.com

EVAPCO Power México S. de R.L. de C.V.
Calle Iglesia No. 2, Torre E
Tizapan San Ángel, Del. Álvaro Obregón
Ciudad de México, D.F. México 01090
Phone: +52 (55) 8421-9260
e-mail: info@evapco-blct.com

Refrigeration Valves &
Systems Corporation
A wholly owned subsidiary of EVAPCO, Inc.
Bryan, TX USA
979-778-0095 p
rvs@rvscorp.com

EvapTech, Inc.
A wholly owned subsidiary of EVAPCO, Inc.
Lenexa, KS USA
913-322-5165 p
marketing@evaptech.com

Tower Components, Inc.
A wholly owned subsidiary of EVAPCO, Inc.
Ramseur, NC USA
336-824-2102 p
mail@towercomponentsinc.com

EVAPCO Alcoil, Inc.
A wholly owned subsidiary of EVAPCO, Inc.
York, PA USA
717-347-7500 p
info@alcoil.net

Europe

EVAPCO Europe BVBA
European Headquarters
Heersterveldweg 19
Industrieterrein Oost
3700 Tongeren, Belgium
(32) 12-395029 p | (32) 12-238527 f
evapco.europe@evapco.be

EVAPCO Europe, S.r.l.
Milan, Italy
(39) 02-939-9041 p
evapcoeurope@evapco.it

EVAPCO Europe, S.r.l.
Sondrio, Italy

EVAPCO Europe GmbH
Meerbusch, Germany
(49) 2159 6956 18 p
info@evapco.de

EVAPCO Air Solutions
A wholly owned subsidiary of EVAPCO, Inc.
Aabybro, Denmark
(45) 9824 4999 p
info@evapco.dk

EVAPCO Air Solutions GmbH
Garbsen, Germany
(49) 5137 93875-0 p
info@evapcoas.de

Evap Egypt Engineering Industries Co.
A licensed manufacturer of EVAPCO, Inc.
Nasr City, Cairo, Egypt
2 02 24022866 / 2 02 24044997 p
primacool@link.net / shady@primacool.net

EVAPCO S.A. (Pty.) Ltd.
A licensed manufacturer of EVAPCO, Inc.
Isando 1600, Republic of South Africa
(27) 11-392-6630 p
evapco@evapco.co.za

Asia/Pacific

EVAPCO Asia/Pacific Headquarters
1159 Luoning Road
Baoshan Industrial Zone
Shanghai 200949, P.R. China
(86) 21-6687-7786 p | (86) 21-6687-7008 f
marketing@evapcochina.com

EVAPCO (Shanghai) Refrigeration
Equipment Co., Ltd.
Baoshan Industrial Zone Shanghai, P.R. China
(86) 21-6687-7786 p
marketing@evapcochina.com

Beijing EVAPCO Refrigeration
Equipment Co., Ltd.
Huairou District Beijing, P.R. China
010-6166-7238 p
evapcobj@evapcochina.com

EVAPCO Australia (Pty.) Ltd.
Riverstone NSW 2765, Australia
(61) 2 9627-3322 p
sales@evapco.com.au

EVAPCO Composites Sdn. Bhd
Rawang, Selangor, Malaysia
(60-3) 6092-2209 p

EvapTech Asia Pacific Sdn. Bhd
A wholly owned subsidiary of EvapTech, Inc.
Puchong, Selangor, Malaysia
(60-3) 8070-7255 p
marketing-ap@evaptech.com

South America

EVAPCO Brasil
Equipamentos Industriais Ltda.
Al. Vênus, 151 – CEP: 13347-659
Indaiatuba –São Paulo – Brasil
(55+11) 5681-2000 p
vendas@evapco.com.br

Fan Technology Resource
Cruz das Almas – Indaiatuba
São Paulo, Brasil 13308-200
55 (11) 4025-1670
fantr@fantr.com

www.evapco-blct.com

3M/3 18/YGS Bulletin AT18ENG

©2018 EVAPCO, Inc.

Committed to making life easier, more reliable and more sustainable for people everywhere

Cooling Tower Technical Data Sheet

Arturo Manjarrez
5151 allendale lane

4107900170
amanjarrez@evapco.com

(1) AT 14-3F9
Option 1

Project Details

Project Name : 08.18.22 RMC2 Roxana - Illinois
Location: TBD UNK

Date: 8/18/2022
Customer:
Contact:
Contact Email:

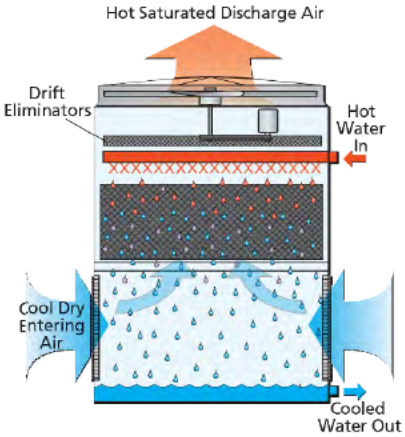

Product Description

The original Advanced Technology cooling tower provides an induced-draft, axial fan solution for a wide array of outdoor cooling capacities.

Selection Criteria	Total	Each Unit
Flow:	111.0 GPM	111.0 GPM
Fluid:	Water	Water
Entering Fluid Temp:	117.5°F	117.5°F
Leaving Fluid Temp:	81.5°F	81.5°F
Entering Wet Bulb:	78.0°F	78.0°F

Required Capacity

1,998.00 MBH
133.20 Tons

Unit Selected

One(1) EVAPCO AT 14-3F9 at 101.8% capacity (2,033.96 MBH)

Product Line is CTI/ECC Certified. Design conditions are outside the scope of CTI Standard 201 RS.

Physical Data Per Unit

Overall Dimensions (WxLxH):	4'-1/2" x 8'-11 1/2" x 10'-6 1/2"
Operating Weight:	3,810 lbs
Shipping Weight:	2,260 lbs
Heaviest Section:	1,640 lbs

*weights and dimensions could vary depending on options selected

IBC Design Capability

IBC Standard Structural Design
1.0 Importance Factor Specified

Seismic(Sds):	up to 1.34 g, z/h = 0
Wind Load(P):	up to 119 psf

Fan Motor Data per Unit

Number of Fans:	2
# of Fan Motors:	2
Nameplate Power (460/3/60):	3.00 HP Per Motor
Total Connected Nameplate Power:	6.00 HP
Typical Nameplate FLA:	4.1 Amps Per Motor

*Nameplate FLA could vary

Additional Details Per Unit

Air Flow:	23,600 CFM

Hydraulic Data

Inlet Pressure Drop:	2.3 psi
Evaporated Water Rate:	3.20 GPM

Accessories

(1) ASHRAE 90.1-2019 Energy Compliant
(1) EVAPAK Fill
(2) Fan Motor: Space Heaters
(1) IBC Standard Structural Design
(1) El. Heaters (0F / -18C ambient) (1) 4 kW; 460/3/60
(1) 1.0 Importance Factor Specified
(2) Fan Motor: Inverter Capable, Premium Efficient

Arturo Manjarrez
5151 allendale lane

4107900170
amanjarrez@evapco.com

SECTION 23 65 00
COOLING TOWERS

PART 1 - GENERAL

1.1 RELATED DOCUMENTS

A. Drawings and general provisions of the Contract, including General and Supplementary Conditions and Division 01 Specification Sections, apply to this Section.

1.2 SUMMARY

A. This Section includes factory assembled and tested, open circuit mechanical induced-draft vertical discharge cooling tower.

1.3 SUBMITTALS

A. Product Data: For each type of product indicated. Include rated capacities, pressure drop, performance curves with selected points indicated, furnished specialties, and accessories.

B. Shop Drawings: Complete set of manufacturer's prints of equipment assemblies, control panels, sections and elevations, and unit isolation. Include the following:

1. Assembled unit dimensions.

2. Weight and load distribution.

3. Required clearances for maintenance and operation.

4. Sizes and locations of piping and wiring connections.

5. Wiring Diagrams: For power, signal, and control wiring. Differentiate between manufacturer installed and field installed wiring.

C. Operation and Maintenance Data: Each unit to include operation and maintenance manual.

1.4 QUALITY ASSURANCE

A. Verification of Performance:

1. The thermal performance shall be certified by the Cooling Technology Institute in accordance with CTI Certification Standard STD-201. Lacking such certification, a field acceptance test shall be conducted within the warranty period in accordance with CTI Acceptance Test Code ATC-105, by a Licensed CTI Thermal Testing Agency.

2. Unit Sound Performance ratings shall be tested according to CTI ATC-128 standard. Sound ratings shall not exceed specified ratings.

3. Unit shall meet or exceed energy efficiency per ASHRAE 90.1-2019.

1.5 WARRANTY

A. Submit a written warranty executed by the manufacturer, agreeing to repair or replace components of the unit that fail in materials and workmanship within the specified warranty period.

1. The Entire Unit shall have a comprehensive one (1) year warranty against defects in materials and workmanship from startup, not to exceed eighteen (18) month from shipment of the unit.

2. Fan Motor/Drive System: Warranty Period shall be Five (5) years from date of unit shipment from Factory (fan motor(s), fan(s), fan shaft(s), bearings, mechanical support, sheaves, bushings and belt(s)).

PART 2 - PRODUCTS

2.1 MANUFACTURERS

A. Manufacturers: Subject to compliance with requirements, provide cooling towers manufactured by one of the following:

1. EVAPCO Model AT 14-3F9

2. Approved Substitute

2.2 THERMAL PERFORMANCE

A. Each unit shall be capable to cool 111.0 GPM of water entering at 117.5° F leaving at 81.5° F at a design entering wet bulb of 78.0° F.

2.3 IBC COMPLIANCE

A. The structure of this product shall be designed, analyzed, and constructed in accordance with the wind and seismic load requirements of the following: 2009 IBC, 2012 IBC, 2015 IBC, 2018 IBC, ASCE/SEI 7-05, ASCE/SEI 7-10, ASCE/SEI 7-16, NFPA 5000. For Importance Factor (I_P) = 1.0, S_{DS} = 1.34 (@ z/h = 0) and P = 119 psf.

2.4 COMPONENTS

A. Description: Factory assembled and tested, induced draft counter flow cooling tower complete with fan, fill, louvers, accessories and rigging supports

B. Materials of Construction

1. All cold water basin components including vertical supports, air inlet louver frames and panels up to rigging seam shall be constructed of heavy gauge mill hot-dip galvanized steel.

2. Upper Casing, channels and angle supports shall be constructed of heavy gauge mill hot-dip galvanized steel. Fan cowl and guard shall be constructed of galvanized steel. All galvanized steel shall be coated with a minimum of 2.35 ounces of zinc per square foot of area (G-235 Hot-Dip Galvanized Steel designation). During fabrication, all galvanized steel panel edges shall be coated with a 95% pure zinc-rich compound.
All evaporative cooling equipment utilizing galvanized construction require initial passivation to maximize the service life of the equipment. The site's water treatment vendor should be contacted several weeks prior to adding any water to the system to provide a passivation plan along with associated passivation plan costs.

C. Fan(s):

1. Fan(s) shall be high efficiency axial propeller type, using a high strength die cast aluminum hub and fiberglass reinforced polypropylene (PPG) wide chord blades. Each fan shall be statically balanced and installed in a closely fitted cowl with venturi air inlet for maximum fan efficiency.

D. Drift Eliminators

1. Drift eliminators shall be constructed entirely of Polyvinyl Chloride (PVC) in easily handled sections. Design shall incorporate three changes in air direction and limit the water carryover to a maximum of 0.001% of the recirculating water rate. Drift eliminators shall be self-extinguishing, have a flame spread of less than 25 under ASTM E84, and shall be resistant to rot, decay and biological attack.

E. Water Distribution System

1. Spray nozzles shall be precision molded ABS, large orifice nozzles utilizing fluidic technology for superior water distribution over the fill media. Nozzles shall be designed to minimize water distribution system maintenance. Spray header and branches shall be Schedule 40 Polyvinyl Chloride (PVC) for corrosion resistance with a steel connection to attach external piping.

F. Heat Transfer Media

1. Fill media shall be constructed of Polyvinyl Chloride (PVC) of cross-fluted design and suitable for inlet water temperatures up to 130° F. The bonded block fill shall be bottom supported and suitable as an internal working platform. Fill shall be self-extinguishing, have a flame spread of less than 25 under ASTM E84, and shall be resistant to rot, decay and biological attack.

G. Air Inlet Louvers

1. The air inlet louvers shall be constructed from UV inhibited Polyvinyl Chloride (PVC) and incorporate a framed interlocking design that allows for easy removal of air inlet louvers for access to the entire basin area for maintenance. The air inlet louvers shall have a minimum of two changes in air direction and shall be of a non-planar design to prevent splash-out and block direct sunlight & debris from entering the basin. Air inlet louvers shall be self-extinguishing, have a flame spread of less than 25 under ASTM E84, and shall be resistant to rot, decay and biological attack.

H. Make up Float Valve Assembly

1. Make up float assembly shall be a mechanical brass valve with an adjustable plastic float.

I. Pan Strainer

1. Pan Strainer(s) shall be all Type 304 Stainless Steel construction with large area removable perforated screens.

J. Pipe Connection Type

1. Any connections provided with a Groove (GVD) or Beveled for Welding/Grooved (BFW/GVD) shall conform to standard groove specification (SGS).

2.5 MOTORS AND DRIVES

A. General requirements for motors are specified in Division 23 Section “Motors”

B. Fan Motor

1. Fan motor(s) shall be totally enclosed, ball bearing type electric motor(s) suitable for moist air service. Motor(s) are Premium Efficient, Class F insulated, 1.15 service factor design. Inverter rated per NEMA MG1 Part 31.4.4.2 and suitable for variable torque applications and constant torque speed range with properly sized and adjusted variable frequency drives.

2. Fan motor(s) shall include strip-type space heaters with separate leads brought to the motor conduit box.

C. Fan Drive

1. The fan drive shall be multigroove, solid back V-belt type with QD tapered bushings designed for 150% of the motor nameplate power. The belt material shall be neoprene reinforced with polyester cord and specifically designed for evaporative equipment service. Fan sheave shall be aluminum alloy construction. Belt adjustment shall be accomplished from the exterior of the unit.

D. Fan Shaft

1. Fan shaft shall be solid, ground and polished steel. Exposed surface shall be coated with rust preventative.

E. Fan Shaft Bearings

1. Fan Shaft Bearings shall be heavy-duty, self-aligning ball type bearings with extended lubrication lines to grease fittings located on access door frame. Bearings shall be designed for a minimum L-10 life of 100,000 hours.

2.6 MAINTENANCE ACCESS

A. Fan Section

1. Circular access door shall be located in the fan section for fan drive and water distribution system access. Swing away motor cover shall be hinged for motor access.

B. Basin Section

1. Framed removable louver panels shall be on two (2) sides of the unit for pan and sump access.

2.7 ACCESSORIES

A. Basin Heater Package

1. Cold water basin shall be fitted with copper element, electric immersion heater(s) with a separate thermostat and low water protection device. Heaters shall be selected to maintain +40° F pan water at 0° F ambient temperature.

UNIT	COOLING TOWER		DWG. #	T3040936-DRJ-ST	REV.	-
MODEL #	AT 14-3F9	SCALE NTS	SERIAL #		DATE	8/18/2022

EVAPCO, INC.

NOTES:
1. (M)- FAN MOTOR LOCATION
2. HEAVIEST SECTION IS UPPER SECTION
3. MPT DENOTES MALE PIPE THREAD
   FPT DENOTES FEMALE PIPE THREAD
   BFW DENOTES BEVELED FOR WELDING
   GVD DENOTES GROOVED
   FLG DENOTES FLANGE
4. +UNIT WEIGHT DOES NOT INCLUDE ACCESSORIES (SEE ACCESSORY DRAWINGS)
5. MAKE-UP WATER PRESSURE
   20 psi MIN [137 kPa], 50 psi MAX [344 kPa]
6. 3/4" [19MM] DIA. MOUNTING HOLES. REFER TO RECOMENDED STEEL SUPPORT DRAWING.
7. DIMENSIONS LISTED AS FOLLOWS:
   ENGLISH FT-IN
   [METRIC] [mm]

FACE C

FACE B

PLAN VIEW

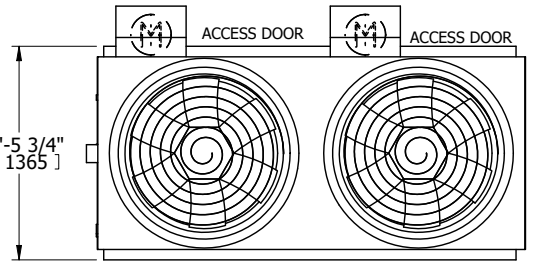

FACE D

FACE A

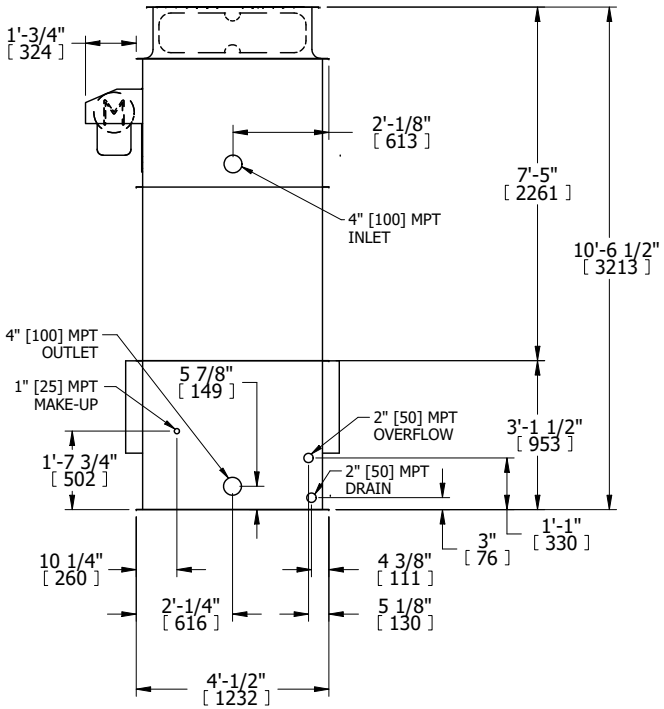

FACE B

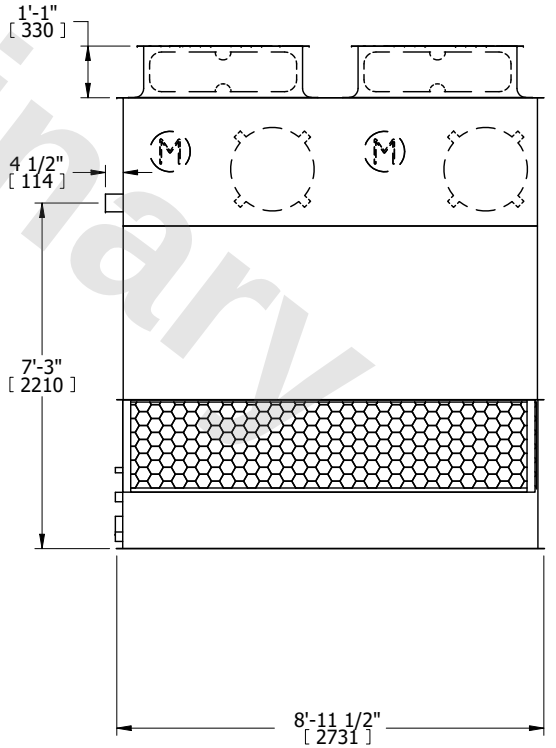

FACE A

Preliminary

SHIPPING WEIGHT	2260 lbs+ [1030] kg+	OPERATING WEIGHT	3810 lbs+ [1730] kg+	HEAVIEST SECTION WEIGHT	1640 lbs+ [745] kg+	NO. OF SHIPPING SECTIONS	2	DRAWN BY:	KWC

UNIT	AT 14-3F9	EVAPCO, INC.	DWG. #	MHAU0000-DB
TITLE	FAN MOTOR SPACE HEATERS		SCALE N.T.S.	DRAWN BY BLL

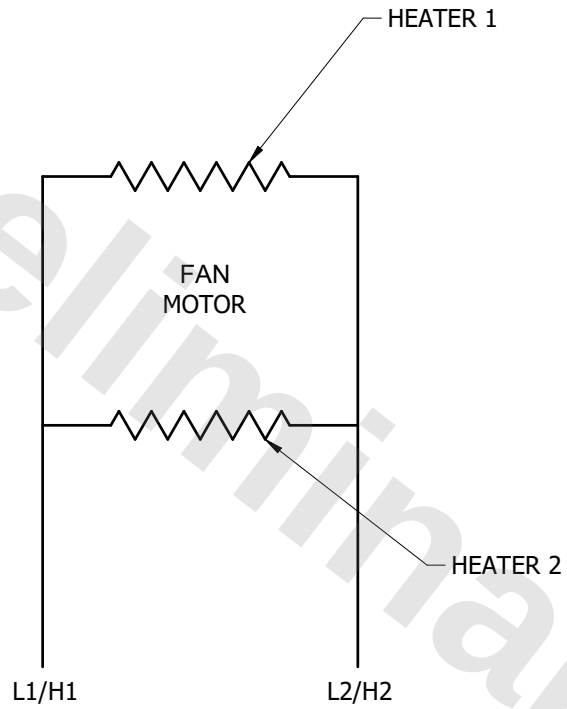

ELECTRICAL DATA:
VOLTAGE: 120V
CURRENT: <2AMPS

Preliminary

NOTE:
1. FAN MOTOR SPACE HEATERS SHOULD BE ENERGIZED WHEN MOTOR IS OFF TO PREVENT CONDENSATION IN THE MOTOR
2. FAN MOTOR SPACE HEATERS MUST BE SWITCHED OFF WHEN MOTOR IS RUNNING

UNIT	AT 14-3F9	EVAPCO, INC.	DWG. #	HLAA30400-DC	
TITLE	HEATER LOCATION		SCALE	N.T.S.	DRAWN BY JLG

Preliminary

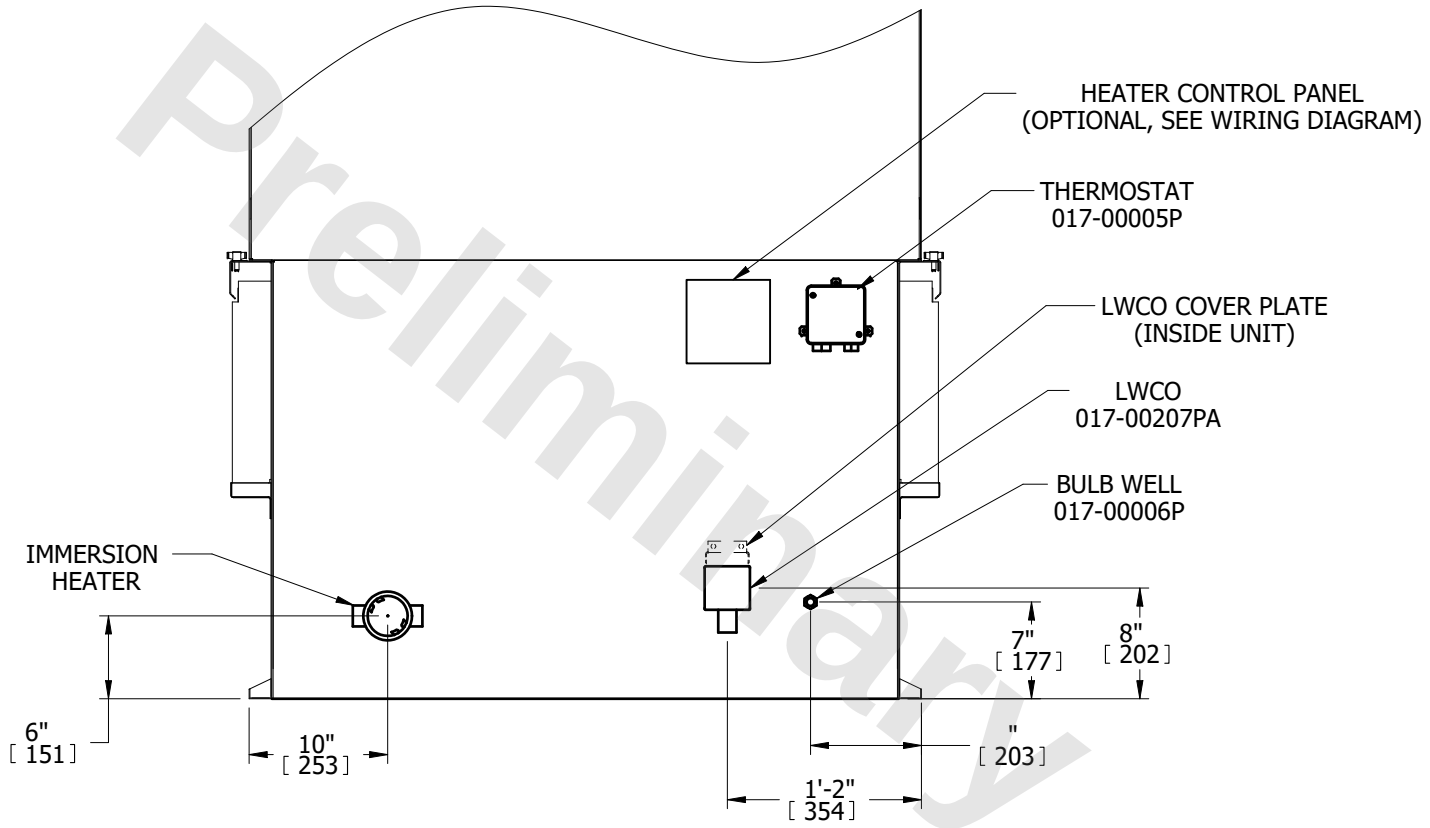

FACE D

NOTES:

1. A MINIMUM OF CLEARANCE IS REQUIRED BETWEEN THE HEATER OUTLET BOX AND THE NEAREST OBSTRUCTION FOR REMOVAL OF THE HEATER.
2. ALL NIPPLES ON UNIT ARE NOT SHOWN IN ORDER TO CLARIFY HEATER COMPONENT LOCATIONS.
3. ALL HEATER COMPONENTS BY EVAPCO ARE FACTORY MOUNTED WHEN POSSIBLE.
4. DIMENSIONS LISTED AS FOLLOWS: ENGLISH FT-IN
   [METRIC] [mm]

UNIT		DWG. #
AT 14-3F9	**EVAPCO, INC.**	B1AU0000-DC
TITLE: 3Ø HEATER WIRING DIAGRAM 1 HEATER		SCALE: N.T.S. / DRAWN BY: SLR

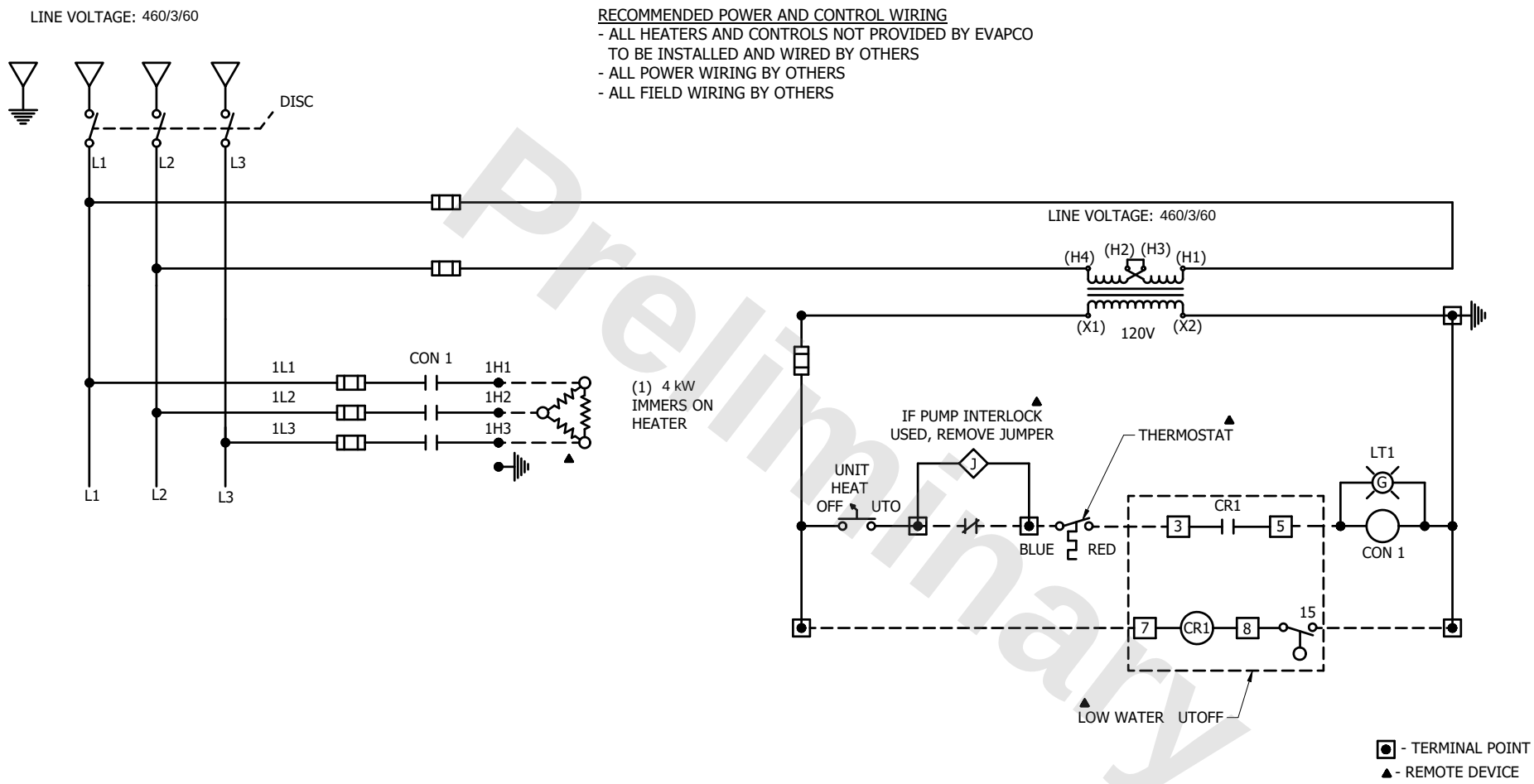

RECOMMENDED POWER AND CONTROL WIRING
- ALL HEATERS AND CONTROLS NOT PROVIDED BY EVAPCO TO BE INSTALLED AND WIRED BY OTHERS
- ALL POWER WIRING BY OTHERS
- ALL FIELD WIRING BY OTHERS

Preliminary

NOTES:
1. DASHED LINES INDICATE FIELD WIRING.
2. THE HEATERS HAVE BEEN SIZED TO MAINTAIN 40° F PAN WATER AT AN AMBIENT TEMPERATURE OF 0° F
3. ALL COMPONENTS BY EVAPCO HAVE TYPE 4 ENCLOSURES.
4. AUXILIARY N.C. CONTACT INTERLOCKS IMMERSION HEATERS WITH SPRAY WATER CIRCULATING PUMP TO DE-ENERGIZE HEATERS WHEN SPRAY PUMP IS RUNNING.
5. (1) CONTACTOR IS SUPPLIED FOR EVERY (2) HEATERS
   - CONTACTOR SHOULD BE WIRED WITH SEPARATE SUPPLY TERMINALS FOR EACH HEATER.
6. (1) CONTACTOR IS SUPPLIED PER CELL OF A MULTICELL UNIT
   - PROVIDES FOR INDIVIDUAL CELL OPERATION.

IMMERSION HEATER BY:	EVAPCO
LOW WATER CUTOFF/THERMOSTAT CONTROL BY:	EVAPCO
AUXILIARY N.C. PUMP INTERLOCK BY:	OTHERS
HEATER CONTROL PANEL BY:	OTHERS
TRANSFORMER BY:	OTHERS
HEATER CONTACTOR BY:	OTHERS
FUSED DISCONNECT BY:	OTHERS

Full Speed Complete Sound Data

Arturo Manjarrez
5151 allendale lane

4107900170
amanjarrez@evapco.com

Sound Pressure Levels (SPL) in dB RE 0.0002 Microbar
Sound Power Levels (PWL) in dB RE 10-12 Watt

Model	AT 14-3F9
Motor	3.00 HP
# Motors	2
Speed	Full Speed

1 Cell Data

	Sound Pressure Level (dB)										
	End		Motor Side		Opp End		Opp Mtr. Side		Top		Sound
	5.0 ft	50.0 ft	5.0 ft	50.0 ft	5.0 ft	50.0 ft	5.0 ft	50.0 ft	5.0 ft	50.0 ft	Power
Band	(1.5m)	(15.2m)	(1.5m)	(15.2m)	(1.5m)	(15.2m)	(1.5m)	(15.2m)	(1.5m)	(15.2m)	Level (db)
63 HZ	86	76	88	77	86	76	88	77	84	76	108
125 HZ	87	80	90	81	87	80	89	81	93	82	113
250 HZ	82	73	84	74	82	73	83	74	87	76	106
500 HZ	79	67	84	68	79	67	83	68	87	73	101
1 KHZ	73	63	79	65	73	63	78	65	81	66	96
2 KHZ	69	59	73	61	69	59	73	61	76	63	93
4 KHZ	64	55	70	57	64	55	70	57	70	62	90
8 KHZ	59	48	69	52	59	48	69	52	63	53	83
Calc dBA	80	70	85	72	80	70	84	72	87	74	104

Sound option(s) selected: None

Remarks:

1. Sound Pressure Levels are according to CTI Standard ATC-128 and verified by an independent CTI-licensed sound test agency
2. Sound Power Levels are calculated according to the Small Units Section 8
3. Sound from free-field conditions over a reflecting plane with +/-2 db(A) tolerance
4. Noise levels can increase with variable frequency drives depending on the drive manufacturer and the drive configuration
5. Complete unit sound data with all fans operating

CERTIFICATE OF COMPLIANCE

Independent Sound Validation

All EVAPCO Cooling Towers, Closed Circuit Coolers and Condensers have been tested in accordance with CTI ATC-128, Test Code for Measurement of Sound from Water-Cooling Towers, by a CTI-licensed independent test agency

As outlined in CTI ATC-128, sound testing was conducted on various EVAPCO cooling towers, closed circuit coolers and condenser models by an independent CTI-licensed sound test agency. Sound pressure levels were recorded in the acoustic near-field and far-field locations. Using certified and calibrated precision sound test instruments per test standards, the sound test agency conducted and verified the analysis.

Applicable Codes:
CTI ATC 128

Cooling Tower Technical Data Sheet

Arturo Manjarrez
5151 allendale lane

4107900170
amanjarrez@evapco.com

(1) AT 17-2J9
Option 2

Project Details

Project Name : 08.18.22 RMC2 Roxana - Illinois
Location: TBD UNK

Date: 8/18/2022
Customer:
Contact:
Contact Email:

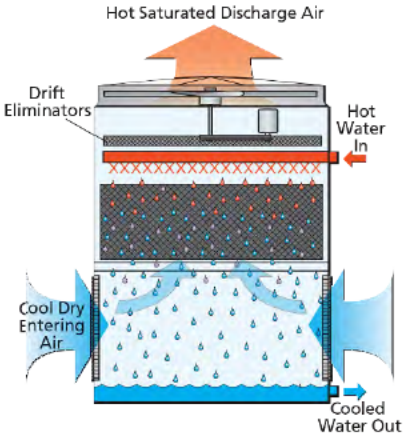

Product Description

The original Advanced Technology cooling tower provides an induced-draft, axial fan solution for a wide array of outdoor cooling capacities.

Selection Criteria	Total	Each Unit
Flow:	184.0 GPM	184.0 GPM
Fluid:	Water	Water
Entering Fluid Temp:	103.5°F	103.5°F
Leaving Fluid Temp:	81.5°F	81.5°F
Entering Wet Bulb:	78.0°F	78.0°F

Required Capacity

2,024.00 MBH
134.93 Tons

Unit Selected

One(1) EVAPCO AT 17-2J9 at 101.1% capacity (2,046.26 MBH)

Product Line is CTI/ECC Certified. Design conditions are outside the scope of CTI Standard 201 RS.

Physical Data Per Unit

Overall Dimensions (WxLxH):	7'-4" x 8'-11 1/2" x 11'-8 3/8"
Operating Weight:	6,570 lbs
Shipping Weight:	4,060 lbs
Heaviest Section:	2,700 lbs

*weights and dimensions could vary depending on options selected

IBC Design Capability

IBC Standard Structural Design
1.0 Importance Factor Specified

Seismic(Sds):	up to 1.34 g, z/h = 0
Wind Load(P):	up to 119 psf

Fan Motor Data per Unit

Number of Fans:	1
# of Fan Motors:	1
Nameplate Power (460/3/60):	15.00 HP Per Motor
Typical Nameplate FLA:	18 Amps Per Motor

*Nameplate FLA could vary

Additional Details Per Unit

Air Flow:	45,600 CFM

Hydraulic Data

Inlet Pressure Drop:	0 psi
Evaporated Water Rate:	3.24 GPM

Accessories

(1) ASHRAE 90.1-2019 Energy Compliant
(1) EVAPAK Fill
(1) Fan Motor: Space Heaters
(1) IBC Standard Structural Design
(1) El. Heaters (0F / -18C ambient) (1) 6 kW; 460/3/60
(1) 1.0 Importance Factor Specified
(1) Fan Motor: Inverter Capable, Premium Efficient

Arturo Manjarrez
5151 allendale lane

4107900170
amanjarrez@evapco.com

SECTION 23 65 00
COOLING TOWERS

PART 1 - GENERAL

1.1 RELATED DOCUMENTS

A. Drawings and general provisions of the Contract, including General and Supplementary Conditions and Division 01 Specification Sections, apply to this Section.

1.2 SUMMARY

A. This Section includes factory assembled and tested, open circuit mechanical induced-draft vertical discharge cooling tower.

1.3 SUBMITTALS

A. Product Data: For each type of product indicated. Include rated capacities, pressure drop, performance curves with selected points indicated, furnished specialties, and accessories.

B. Shop Drawings: Complete set of manufacturer's prints of equipment assemblies, control panels, sections and elevations, and unit isolation. Include the following:

1. Assembled unit dimensions.

2. Weight and load distribution.

3. Required clearances for maintenance and operation.

4. Sizes and locations of piping and wiring connections.

5. Wiring Diagrams: For power, signal, and control wiring. Differentiate between manufacturer installed and field installed wiring.

C. Operation and Maintenance Data: Each unit to include operation and maintenance manual.

1.4 QUALITY ASSURANCE

A. Verification of Performance:

1. The thermal performance shall be certified by the Cooling Technology Institute in accordance with CTI Certification Standard STD-201. Lacking such certification, a field acceptance test shall be conducted within the warranty period in accordance with CTI Acceptance Test Code ATC-105, by a Licensed CTI Thermal Testing Agency.

2. Unit Sound Performance ratings shall be tested according to CTI ATC-128 standard. Sound ratings shall not exceed specified ratings.

3. Unit shall meet or exceed energy efficiency per ASHRAE 90.1-2019.

1.5 WARRANTY

A. Submit a written warranty executed by the manufacturer, agreeing to repair or replace components of the unit that fail in materials and workmanship within the specified warranty period.

1. The Entire Unit shall have a comprehensive one (1) year warranty against defects in materials and workmanship from startup, not to exceed eighteen (18) month from shipment of the unit.

2. Fan Motor/Drive System: Warranty Period shall be Five (5) years from date of unit shipment from Factory (fan motor(s), fan(s), fan shaft(s), bearings, mechanical support, sheaves, bushings and belt(s)).

PART 2 - PRODUCTS

2.1 MANUFACTURERS

A. Manufacturers: Subject to compliance with requirements, provide cooling towers manufactured by one of the following:

1. EVAPCO Model AT 17-2J9

2. Approved Substitute

2.2 THERMAL PERFORMANCE

A. Each unit shall be capable to cool 184.0 GPM of water entering at 103.5° F leaving at 81.5° F at a design entering wet bulb of 78.0° F.

2.3 IBC COMPLIANCE

A. The structure of this product shall be designed, analyzed, and constructed in accordance with the wind and seismic load requirements of the following: 2009 IBC, 2012 IBC, 2015 IBC, 2018 IBC, ASCE/SEI 7-05, ASCE/SEI 7-10, ASCE/SEI 7-16, NFPA 5000. For Importance Factor (I_P) = 1.0, S_{DS} = 1.34 (@ z/h = 0) and P = 119 psf.

2.4 COMPONENTS

A. Description: Factory assembled and tested, induced draft counter flow cooling tower complete with fan, fill, louvers, accessories and rigging supports

B. Materials of Construction

1. All cold water basin components including vertical supports, air inlet louver frames and panels up to rigging seam shall be constructed of heavy gauge mill hot-dip galvanized steel.

2. Upper Casing, channels and angle supports shall be constructed of heavy gauge mill hot-dip galvanized steel. Fan cowl and guard shall be constructed of galvanized steel. All galvanized steel shall be coated with a minimum of 2.35 ounces of zinc per square foot of area (G-235 Hot-Dip Galvanized Steel designation). During fabrication, all galvanized steel panel edges shall be coated with a 95% pure zinc-rich compound.
All evaporative cooling equipment utilizing galvanized construction require initial passivation to maximize the service life of the equipment. The site's water treatment vendor should be contacted several weeks prior to adding any water to the system to provide a passivation plan along with associated passivation plan costs.

C. Fan(s):

1. Fan(s) shall be high efficiency axial propeller type with aluminum wide chord blade construction. Each fan shall be dynamically balanced and installed in a closely fitted cowl with venturi air inlet for maximum fan efficiency.

D. Drift Eliminators

1. Drift eliminators shall be constructed entirely of Polyvinyl Chloride (PVC) in easily handled sections. Design shall incorporate three changes in air direction and limit the water carryover to a maximum of 0.001% of the recirculating water rate. Drift eliminators shall be self-extinguishing, have a flame spread of less than 25 under ASTM E84, and shall be resistant to rot, decay and biological attack.

E. Water Distribution System

1. Spray nozzles shall be precision molded ABS, large orifice nozzles utilizing fluidic technology for superior water distribution over the fill media. Nozzles shall be designed to minimize water distribution system maintenance. Spray header and branches shall be Schedule 40 Polyvinyl Chloride (PVC) for corrosion resistance with a steel connection to attach external piping.

F. Heat Transfer Media

1. Fill media shall be constructed of Polyvinyl Chloride (PVC) of cross-fluted design and suitable for inlet water temperatures up to 130° F. The bonded block fill shall be bottom supported and suitable as an internal working platform. Fill shall be self-extinguishing, have a flame spread of less than 25 under ASTM E84, and shall be resistant to rot, decay and biological attack.

G. Air Inlet Louvers

1. The air inlet louvers shall be constructed from UV inhibited Polyvinyl Chloride (PVC) and incorporate a framed interlocking design that allows for easy removal of air inlet louvers for access to the entire basin area for maintenance. The air inlet louvers shall have a minimum of two changes in air direction and shall be of a non-planar design to prevent splash-out and block direct sunlight & debris from entering the basin. Air inlet louvers shall be self-extinguishing, have a flame spread of less than 25 under ASTM E84, and shall be resistant to rot, decay and biological attack.

H. Make up Float Valve Assembly

1. Make up float assembly shall be a mechanical brass valve with an adjustable plastic float.

I. Pan Strainer

1. Pan Strainer(s) shall be all Type 304 Stainless Steel construction with large area removable perforated screens.

J. Pipe Connection Type

1. Any connections provided with a Groove (GVD) or Beveled for Welding/Grooved (BFW/GVD) shall conform to standard groove specification (SGS).

2.5 MOTORS AND DRIVES

A. General requirements for motors are specified in Division 23 Section “Motors”

B. Fan Motor

1. Fan motor(s) shall be totally enclosed, ball bearing type electric motor(s) suitable for moist air service. Motor(s) are Premium Efficient, Class F insulated, 1.15 service factor design. Inverter rated per NEMA MG1 Part 31.4.4.2 and suitable for variable torque applications and constant torque speed range with properly sized and adjusted variable frequency drives.

2. Fan motor(s) shall include strip-type space heaters with separate leads brought to the motor conduit box.

C. Fan Drive

1. The fan drive shall be multigroove, solid back V-belt type with QD tapered bushings designed for 150% of the motor nameplate power. The belt material shall be neoprene reinforced with polyester cord and specifically designed for evaporative equipment service. Fan sheave shall be aluminum alloy construction. Belt adjustment shall be accomplished from the exterior of the unit.

D. Fan Shaft

1. Fan shaft shall be solid, ground and polished steel. Exposed surface shall be coated with rust preventative.

E. Fan Shaft Bearings

1. Fan Shaft Bearings shall be heavy-duty, self-aligning ball type bearings with extended lubrication lines to grease fittings located on access door frame. Bearings shall be designed for a minimum L-10 life of 100,000 hours.

2.6 MAINTENANCE ACCESS

A. Fan Section

1. Access door shall be hinged and located in the fan section for fan drive and water distribution system access. Swing away motor cover shall be hinged for motor access.

B. Basin Section

1. Framed removable louver panels shall be on all four (4) sides of the unit for pan and sump access.

C. Internal Working Platform

1. Internal working platform shall provide easy access to the fans, belts, motors, sheaves, bearings, all mechanical equipment and complete water distribution system. The fill shall be an acceptable means of accessing these components.

2.7 ACCESSORIES

A. Basin Heater Package

1. Cold water basin shall be fitted with copper element, electric immersion heater(s) with a separate thermostat and low water protection device. Heaters shall be selected to maintain +40° F pan water at 0° F ambient temperature.

UNIT	COOLING TOWER			DWG. #	CT4C070924-DRA-ST	REV.	-
MODEL #	AT 17-2J9	SCALE	NTS	SERIAL #		DATE	8/18/2022

EVAPCO, INC.

NOTES:
1. (M)- FAN MOTOR LOCATION
2. HEAVIEST SECTION IS FAN/CASING SECTION
3. MPT DENOTES MALE PIPE THREAD
   FPT DENOTES FEMALE PIPE THREAD
   BFW DENOTES BEVELED FOR WELDING
   GVD DENOTES GROOVED
   FLG DENOTES FLANGE
4. +UNIT WEIGHT DOES NOT INCLUDE ACCESSORIES (SEE ACCESSORY DRAWINGS)
5. 3/4" [19MM] DIA. MOUNTING HOLES. REFER TO RECOMMENDED STEEL SUPPORT DRAWING
6. DIMENSIONS LISTED AS FOLLOWS:
   ENGLISH FT-IN
   [METRIC] [mm]
7. MAKE-UP WATER PRESSURE
   20 psi MIN [137 kPa], 50 psi MAX [344 kPa]

FACE C

FACE B

PLAN VIEW

FACE D

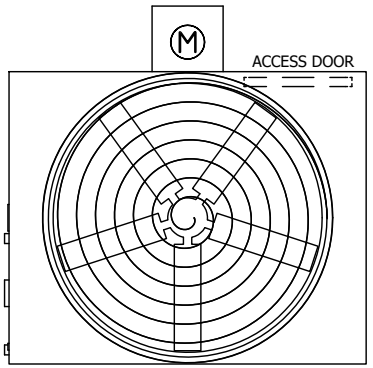

FACE A

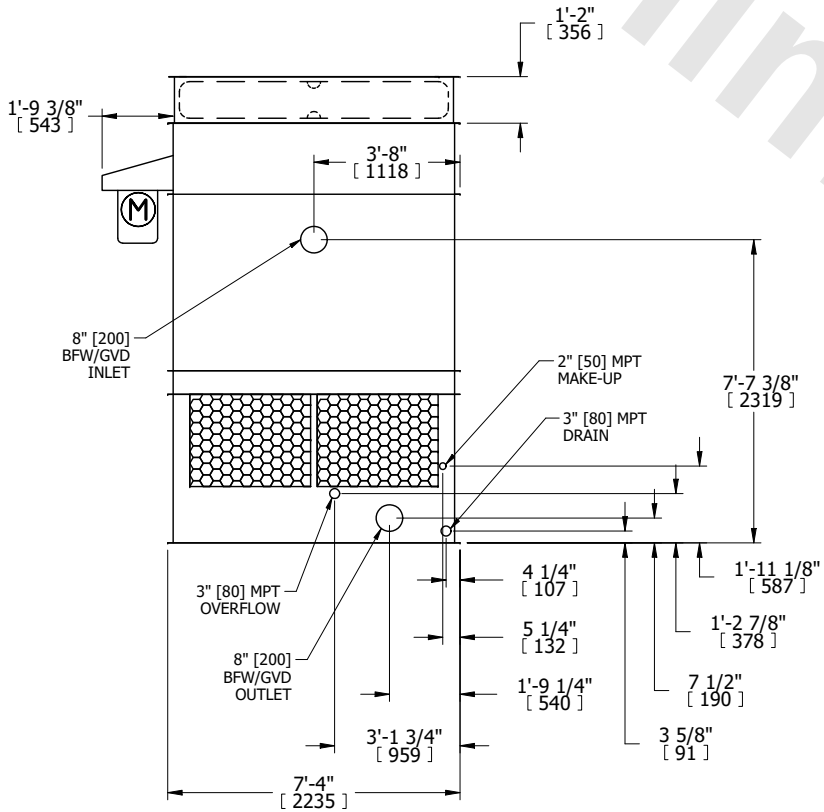

FACE B

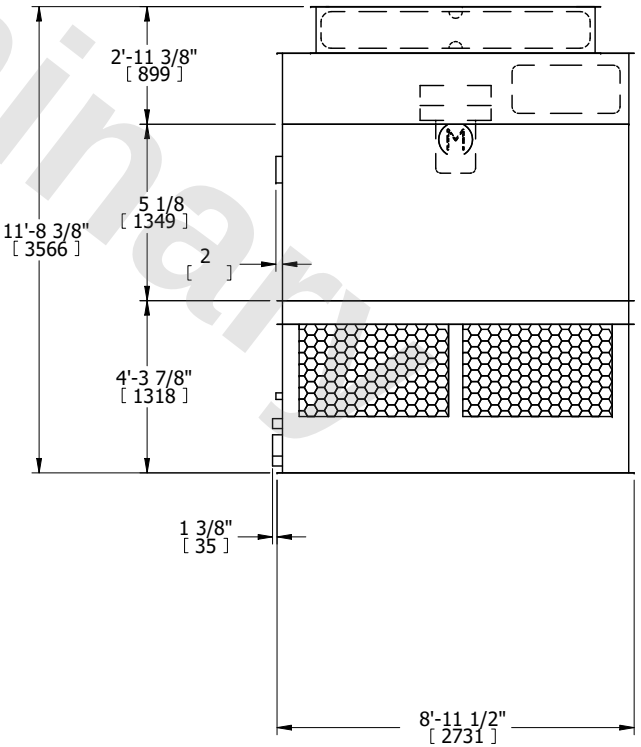

FACE A

SHIPPING WEIGHT	4060 lbs+ [1845] kg+	OPERATING WEIGHT	6570 lbs+ [2985] kg+	HEAVIEST SECTION WEIGHT	2700 lbs+ [1225] kg+	NO. OF SHIPPING SECTIONS	2	DRAWN BY:	MBG

Preliminary

UNIT	AT 17-2J9	EVAPCO, INC.	DWG. #	MHAU0000-DB
TITLE	FAN MOTOR SPACE HEATERS		SCALE N.T.S.	DRAWN BY BLL

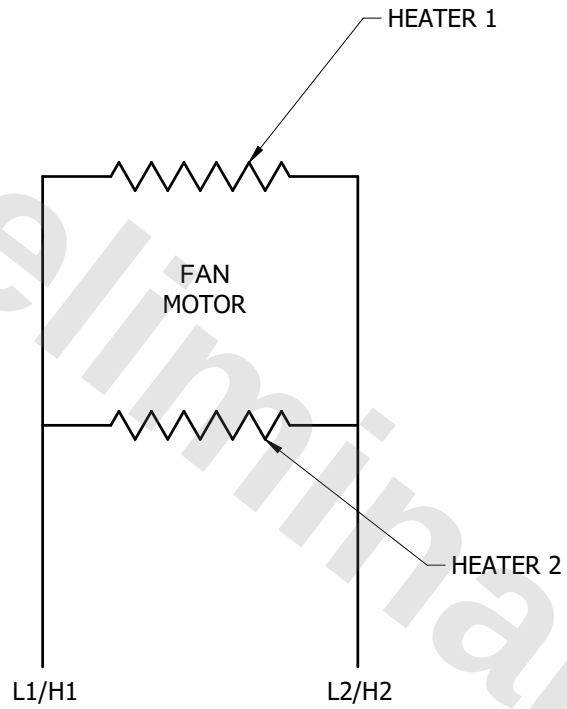

ELECTRICAL DATA:
VOLTAGE: 120V
CURRENT: <2AMPS

Preliminary

NOTE:
1. FAN MOTOR SPACE HEATERS SHOULD BE ENERGIZED WHEN MOTOR IS OFF TO PREVENT CONDENSATION IN THE MOTOR
2. FAN MOTOR SPACE HEATERS MUST BE SWITCHED OFF WHEN MOTOR IS RUNNING

UNIT		DWG. #	
	EVAPCO, INC.		HLT4C0709-DA
TITLE		SCALE	DRAWN BY
HEATER LOCATION		N.T.S.	MBG

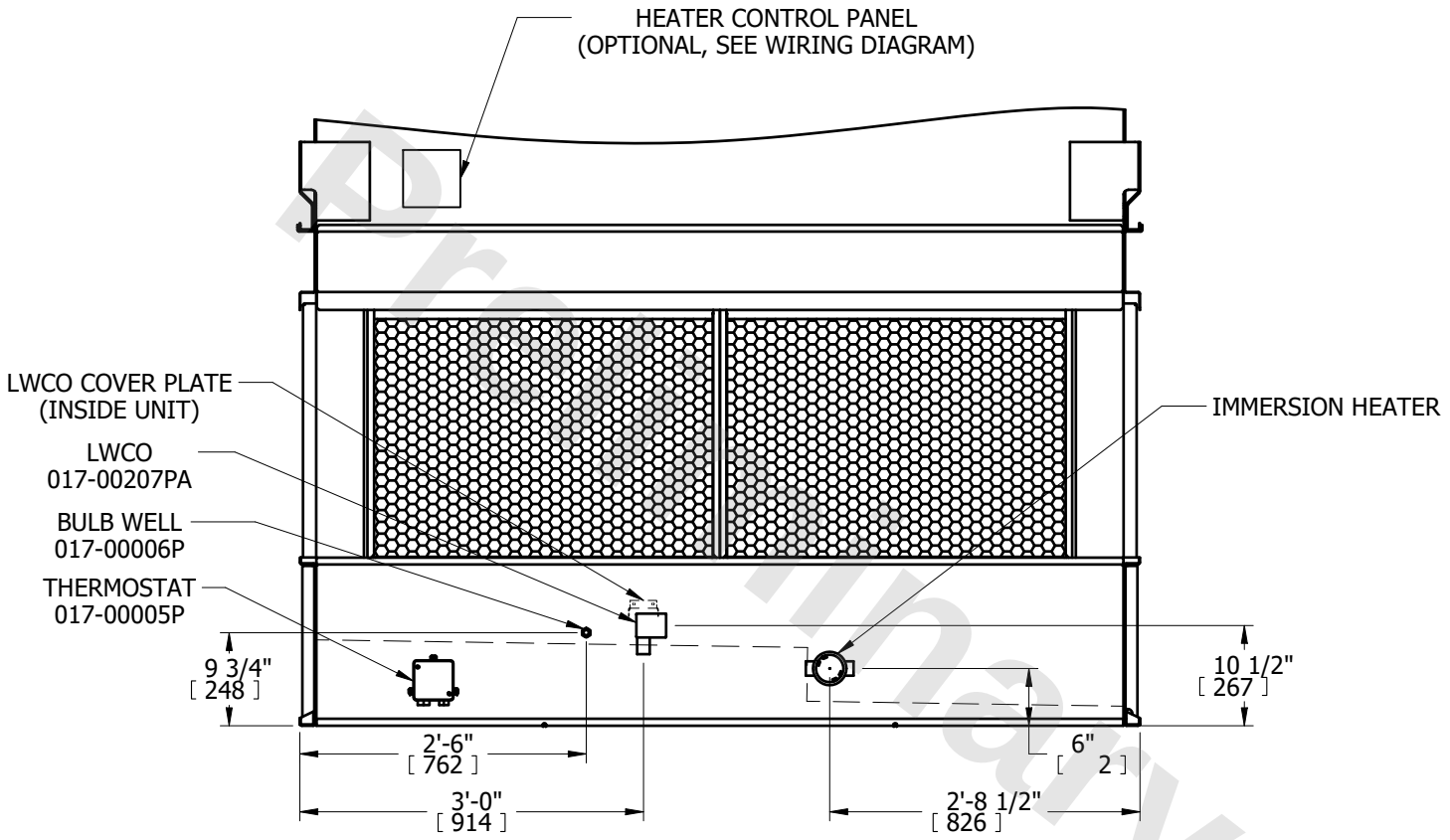

FACE B

Preliminary

NOTES:

1. A MINIMUM OF CLEARANCE IS REQUIRED BETWEEN THE HEATER OUTLET BOX AND THE NEAREST OBSTRUCTION FOR REMOVAL OF THE HEATER.
2. ALL NIPPLES ON UNIT ARE NOT SHOWN IN ORDER TO CLARIFY HEATER COMPONENT LOCATIONS.
3. ALL HEATER COMPONENTS BY EVAPCO ARE FACTORY MOUNTED WHEN POSSIBLE.
4. DIMENSIONS LISTED AS FOLLOWS: ENGLISH FT- IN
   [METRIC] [mm]

UNIT		DWG. #
AT 17-2J9	**EVAPCO, INC.**	B1AU0000-DC
TITLE: 3Ø HEATER WIRING DIAGRAM 1 HEATER		SCALE: N.T.S. / DRAWN BY: SLR

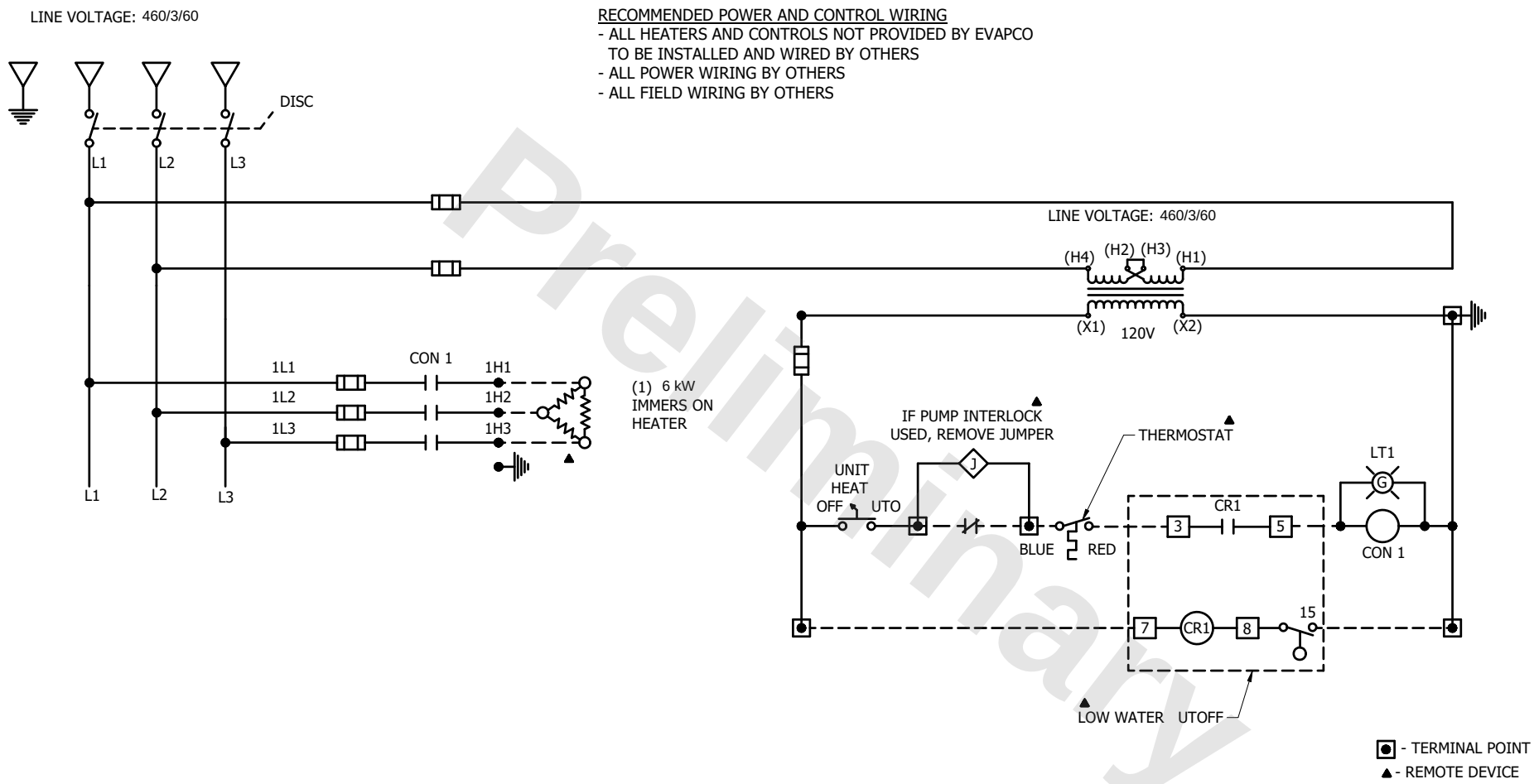

RECOMMENDED POWER AND CONTROL WIRING
- ALL HEATERS AND CONTROLS NOT PROVIDED BY EVAPCO TO BE INSTALLED AND WIRED BY OTHERS
- ALL POWER WIRING BY OTHERS
- ALL FIELD WIRING BY OTHERS

Preliminary

NOTES:
1. DASHED LINES INDICATE FIELD WIRING.
2. THE HEATERS HAVE BEEN SIZED TO MAINTAIN 40° F PAN WATER AT AN AMBIENT TEMPERATURE OF 0° F
3. ALL COMPONENTS BY EVAPCO HAVE TYPE 4 ENCLOSURES.
4. AUXILIARY N.C. CONTACT INTERLOCKS IMMERSION HEATERS WITH SPRAY WATER CIRCULATING PUMP TO DE-ENERGIZE HEATERS WHEN SPRAY PUMP IS RUNNING.
5. (1) CONTACTOR IS SUPPLIED FOR EVERY (2) HEATERS
   - CONTACTOR SHOULD BE WIRED WITH SEPARATE SUPPLY TERMINALS FOR EACH HEATER.
6. (1) CONTACTOR IS SUPPLIED PER CELL OF A MULTICELL UNIT
   - PROVIDES FOR INDIVIDUAL CELL OPERATION.

IMMERSION HEATER BY:	EVAPCO
LOW WATER CUTOFF/THERMOSTAT CONTROL BY:	EVAPCO
AUXILIARY N.C. PUMP INTERLOCK BY:	OTHERS
HEATER CONTROL PANEL BY:	OTHERS
TRANSFORMER BY:	OTHERS
HEATER CONTACTOR BY:	OTHERS
FUSED DISCONNECT BY:	OTHERS

Full Speed Complete Sound Data

Arturo Manjarrez
5151 allendale lane

4107900170
amanjarrez@evapco.com

Sound Pressure Levels (SPL) in dB RE 0.0002 Microbar
Sound Power Levels (PWL) in dB RE 10-12 Watt

Model	AT 17-2J9
Motor	15.00 HP
# Motors	1
Speed	Full Speed

1 Cell Data

	Sound Pressure Level (dB)										
	End		Motor Side		Opp End		Opp Mtr. Side		Top		Sound
	5.0 ft	50.0 ft	5.0 ft	50.0 ft	5.0 ft	50.0 ft	5.0 ft	50.0 ft	5.0 ft	50.0 ft	Power
Band	(1.5m)	(15.2m)	(1.5m)	(15.2m)	(1.5m)	(15.2m)	(1.5m)	(15.2m)	(1.5m)	(15.2m)	Level (db)
63 HZ	78	71	79	71	78	71	79	71	80	71	103
125 HZ	81	70	82	71	81	70	81	70	87	70	102
250 HZ	81	70	82	72	81	70	81	70	87	74	103
500 HZ	76	61	77	63	76	61	76	61	80	70	97
1 KHZ	71	57	73	59	71	57	71	58	76	61	90
2 KHZ	68	52	70	54	68	52	68	54	73	60	87
4 KHZ	69	50	70	52	69	50	69	52	72	59	86
8 KHZ	70	49	70	50	70	49	70	50	69	56	83
Calc dBA	79	65	80	67	79	65	79	65	83	71	99

Sound option(s) selected: None

Remarks:

1. Sound Pressure Levels are according to CTI Standard ATC-128 and verified by an independent CTI-licensed sound test agency
2. Sound Power Levels are calculated according to the Small Units Section 8
3. Sound from free-field conditions over a reflecting plane with +/-2 db(A) tolerance
4. Noise levels can increase with variable frequency drives depending on the drive manufacturer and the drive configuration
5. Complete unit sound data with all fans operating

CERTIFICATE OF COMPLIANCE

Independent Sound Validation

All EVAPCO Cooling Towers, Closed Circuit Coolers and Condensers have been tested in accordance with CTI ATC-128, Test Code for Measurement of Sound from Water-Cooling Towers, by a CTI-licensed independent test agency

As outlined in CTI ATC-128, sound testing was conducted on various EVAPCO cooling towers, closed circuit coolers and condenser models by an independent CTI-licensed sound test agency. Sound pressure levels were recorded in the acoustic near-field and far-field locations. Using certified and calibrated precision sound test instruments per test standards, the sound test agency conducted and verified the analysis.

Applicable Codes:
CTI ATC 128

DATABOOK RUDC BOMBAS

RUDC

BOMBAS



MODELO SRUU-3C7-50
Trifásico 3,0 CV 50Hz
IP-55 W22Xdb Explosão

Sinônimo de Qualidade,
Seriedade e Profissionalismo.

www.rudcbombas.com.br

Rudc Indústria e Comércio Ltda

CUIDADOS COM A INSTALAÇÃO

01 – LOCALIZAÇÃO:

Determine antecipadamente e com exatidão o local onde será instalado a bomba.

2 – PROTEÇÃO:

A bomba deverá ser instalada em local de fácil acesso para eventual manutenção, ventilado e ao abrigo da chuva e intemperismos. Caso a fiação tenha de ficar a mostra, esta deverá ser protegida por cunduites.

3 – ENERGIZAÇÃO:

Verifique que o fornecimento de energia elétrica seja compatível com as característica do motor acoplado a bomba.

4 – ATERRAMENTO:

É altamente recomendado o estabelecimento de um aterramento do motor elétrico.

5- QUADRO DE ENTRADA DE ENERGIA:

Nunca ligar a bomba em ramais de energia secundários ou tomadas. Leve a fiação elétrica do Quadro de Energia diretamente até a bomba, mantendo sempre a bitola uniforme.

Rua Prof. José Gomes Caetano, 811 Distrito Industrial, Leme/SP, CEP: 13612-392.
CNPJ: 61.008.173/0001-40 Fone: (19) 3572-9191 IE: 415.052.478.115

Curta nossa página no facebook

www.rudcbombas.com.br
fernando@rudcbombas.com.br

www.facebook.com.br/rudcbombas.

Rudc Indústria e Comércio Ltda

INSTALAÇÃO

1 – HIDRÁULICA:

Tubulações hidráulicas, sucção e recalque, recomenda-se que sejam montadas com apoio, afim de não serem transferidos pesos a bombas.

Não se deve utilizar tubulação com diâmetro inferiores aqueles encontrados na bomba. Deve-se optar por bitolas maiores para, com isso, melhorar o rendimento do equipamento.

2 – ELÉTRICA:

Evite acidentes. Verifique a tensão de suas instalações elétricas. O esquema de ligação impresso na plaqueta de identificações do motor, mostra a forma correta de ligação dos terminais do motor a instalação elétrica, nunca ligue em tomadas ramais secundários.

É recomendada a instalação de uma chave de partida com contador e relé de sobrecarga, para promover a proteção dos motores elétricos, mono ou trifásico. A falta desta proteção nos motores trifásicos ocasionará a perda da garantia do equipamento, em caso de danos ocasionados por falhas elétricas.

As emendas devem ser feitas com fios novos ou bem limpos, com varias voltas bem apertadas, para haver um contato suficientemente bom. Use fitas isolantes de boa qualidade e verifique que as emendas estejam bem isoladas.

FUNCIONAMENTO

Concluídas as instalações elétricas e hidráulicas, proceda da seguintes forma:

1°) Completar o corpo com o liquido a ser bombeado;

2°) Dar a partida no motor;

3°) Verifique o sentido de rotação do equipamento;

4°) Aguardar alguns minutos para a escorva da bomba.

Rua Prof. José Gomes Caetano, 811 Distrito Industrial, Leme/SP, CEP: 13612-392.
CNPJ: 61.008.173/0001-40 Fone: (19) 3572-9191 IE: 415.052.478.115

Curta nossa página no facebook

www.rudcbombas.com.br
fernando@rudcbombas.com.br

www.facebook.com.br/rudcbombas.

Rudc Indústria e Comércio Ltda

PROVIDÊNCIAS PARA A PARADA DA BOMBA

1° - Fechar o registro da tubulação de recalque.

2° - Fechar o registro de sucção quando houver necessidade de manutenção.

3° - Desligar o acionador observando a parada gradual do equipamento.

4° - Fechar tubulação auxiliares quando houver.

MANUTENÇÃO DO MANCAL

1° - A primeira troca de óleo deve ser feita após as primeiras 250/300 horas de trabalho, a segunda troca deve ser feita após as 1800 horas de trabalho e a partir daí a cada 7000 horas de trabalho.

2° - O mancal deve ser lavado a cada dois anos.

3° - Após certificar-se de que o mesmo está livre de sujeira e umidade, abastecer o suporte com óleo até que o nível fique entre as marcas existentes no indicador de nível de óleo.

ÓLEO RECOMENDADO PARA O MANCAL

Fabricante: Ipiranga. **Motor 4 polos (1750RPM) IPITUR AW - 68**

Motor 2 polos (3500RPM) IPITUR AW - 46

Rua Prof. José Gomes Caetano, 811 Distrito Industrial, Leme/SP, CEP: 13612-392.
CNPJ: 61.008.173/0001-40 Fone: (19) 3572-9191 IE: 415.052.478.115

Curta nossa página no facebook

www.rudcbombas.com.br
fernando@rudcbombas.com.br

www.facebook.com.br/rudcbombas.

Rudc Indústria e Comércio Ltda

PROBLEMAS E CAUSAS PROVÁVEIS

TIPO DE PROBLEMA	CAUSAS PROVAVEIS
O motor gira, mas o equipamento não bombeia ou não apresenta vazão suficiente.	1/2/3/4/5/6/7/8/10
O motor gira, porém o bombeamento é interrompido.	1/3/4/5/6
O equipamento vibra.	7/9/11/12/13/14/15/16
O motor não atinge a rotação de trabalho.	23/24
Superaquecimento do motor.	7/9/15/16/19/21/23/24/25

CAUSAS PROVÁVEIS

1 – A bomba não foi escorvada ou a escorva não foi bem realizada.

2 – Excessiva altura de sucção.

3 – Não há liquido.

4 – Entrada de ar nas conexões.

5 – Rotor ou tubulação entupidos.

6 – Válvula de pé (quando usada) defeituosa, muito pequena, mal instalada ou entupida.

7 – Motor com rotação invertida.

8 – Excessiva altura manométrica.

9 – Altura manométrica inferior à indicada.

10 – Rotor ou tubulação de diâmentro inferior.

11 – Fixação inadequada.

Rudc Indústria e Comércio Ltda

12 – Tubulação sem apoio próprio.

13 – Presença de corpo estranhos.

14 – Cavitação (bomba superdimensionada).

15 – Rotor ou eixo empenados ou atritando com partes estacionarias.

16 – Rolamentos de esfera do motor e ou mancal com desgaste ou danificados.

17 – Falta de corrente elétrica.

18 – Platinado desregulado (motores monofásicos).

19 – Capacitor fraco (motores monofásicos).

20 – Centrifugo defeituoso (motores monofásicos).

21 – Ligação elétrica errada ou com mau contato.

22 – Chave magnética defeituosa.

23 – Baixa tensão.

24 – Bitola do fio muito fina ou inadequada (vide catálogo RUDC BOMBAS).

25 – Sobre-tensão.

Rua Prof. José Gomes Caetano, 811 Distrito Industrial, Leme/SP, CEP: 13612-392.
CNPJ: 61.008.173/0001-40 Fone: (19) 3572-9191 IE: 415.052.478.115

Curta nossa página no facebook

www.rudcbombas.com.br
fernando@rudcbombas.com.br

www.facebook.com.br/rudcbombas.

Rudc Indústria e Comércio Ltda

CERTIFICADO DE QUALIDADE

Certificado : 06223/20.
Cliente : Reconditec Sistemas e Participações Ltda.
Produto : Motobomba **SRUU-3C7-50** em **ferro fundido ASTM A48 CL30, eixo e buchas em aço inox 316 CF8M,** motor **3,0CV, trifásico IP-55 à prova de explosão, 50hz,** 2 pólos, 2900RPM, 400v, caixa de ligação B34T no topo, Selo mecânico em **viton com as faces em carvão x cerâmica**.
Sucção : 1.1/2" Rosca BSP.
Recalque : 1.1/2" Rosca BSP.

Certificamos que o produto, acima descriminado, é fabricado conforme especificações de nossa Engenharia dentro das normas internas e submetidos a ensaio hidrostático.

DADOS TÉCNICOS

Componentes	**Especificações dos Materiais**
Corpo de recalque	: Ferro Fundido ASTM A48 CL30.
Tampa de sucção	: Ferro Fundido ASTM A48 CL30.
Rotor c/ anel	: Ferro Fundido ASTM A48 CL30.
Rotores s/ anel	: Ferro Fundido ASTM A48 CL30.
Estagio	: Ferro Fundido ASTM A48 CL30.
Eixo	: Inox 316 CF8M.
Buchas	: Inox 316 CF8M.
Selo mecânico	: 1.1/4" viton com as faces carvão x cerâmica
Motor Elétrico	: WEG 3,0HP IP-55 à prova explosão, 50hz, 2 pólos 2900RPM 400v

TESTE HIDROSTÁTICO / PNEUMÁTICO

Pressão de Teste na Vedação 7,0 Kgf/cm²



Rua Prof. José Gomes Caetano, 811 Distrito Industrial, Leme/SP, CEP: 13612-392.
CNPJ: 61.008.173/0001-40 Fone: (19) 3572-9191 IE: 415.052.478.115



www.rudcbombas.com.br
fernando@rudcbombas.com.br

www.facebook.com.br/rudcbombas.

Rudc Indústria e Comércio Ltda

Controle de Qualidade

CERTIFICADO DE TESTE HIDROSTÁTICO

Nº 0048589/20

CLIENTE	Reconditec Sistemas e Participações ltda.		
		ITEM	01
BOMBA	SRUU-3C7-50		
MATERIAL BOMBA	Bomba em ferro fundido ASTM A48 CL30, eixo aço inox. Buchas de aço inox 316, SM viton.		

EQUIPAMENTO	GRADUAÇÃO
MANOMETRO	0 A 12 kgf/cm²

LIQUIDO TESTE	TEMPERATURA	PRESSÃO TESTE	TEMPO TESTE
ÁGUA	25º C	7kgf/cm²	20 min

Critério de aceitação conforme IO 019



Controle de Qualidade

Rua Prof. José Gomes Caetano, 811 Distrito Industrial, Leme/SP, CEP: 13612-392.
CNPJ: 61.008.173/0001-40 Fone: (19) 3572-9191 IE: 415.052.478.115

Curta nossa página no facebook

www.rudcbombas.com.br
fernando@rudcbombas.com.br

www.facebook.com.br/rudcbombas.

Rudc Indústria e Comércio Ltda

PEÇAS SOBRESSALETES RECOMENDADAS

Modelo SRUU-3C7-50

ITEM	DESCRIÇÃO	QUANTIDADE
01	Corpo de recalque	1
02	Rotor c/ anel diam. 132mm furo 17mm	1
03	Rotor s/ anel diam. 132mm furo 17mm	2
04	Semi eixo de aço inox.	1
05	Anel O´ring viton	4
09	Selo mecânico 1.1/4” de viton X carvao	1
10	Tampa de sucção	1
11	Estagio	2
12	Buchas de aço inox	3

Rua Prof. José Gomes Caetano, 811 Distrito Industrial, Leme/SP, CEP: 13612-392.
CNPJ: 61.008.173/0001-40 Fone: (19) 3572-9191 IE: 415.052.478.115

Curta nossa página no facebook

www.rudcbombas.com.br
fernando@rudcbombas.com.br

www.facebook.com.br/rudcbombas.

GARANTIA

Este certificado de Garantia é a sua segurança de ter adquirido um produto comercializado através de nossos distribuidores e representantes designados pela RUDC ÍNDUSTRIA E COMÉRCIO LTDA.
A RUDC ÍNDUSTRIA E COMÉRCIO LTDA., garante, nos termos aqui definidos, os produtos RUDC pelo prazo de 12(doze) meses, a partir da data de faturamento, exceto o modelo PRD no qual a garantia é de 6 meses, desde que, não tenha sido alterado e apresentem comprovadamente defeitos de fabricação, falhas de material ou mau funcionamento. Os equipamentos fornecidos por terceiros e acoplados aos nossos produtos terão suas próprias garantias (exemplo motor elétrico).
Os produtos com defeitos serão reparados ou trocados, a juízo do fabricante, na fábrica, com frete pago pelo cliente.
O envio de qualquer produto à fábrica deverá ter prévia autorização por escrito do fabricante com número de ordem e deverá estarcom etiqueta de série do fabricante.
Para sua maior segurança, recomendamos anotar abaixo o modelo e número de série do produto em seu certificado de garantia.

MODELO: **SRUU-3C7-50** SÉRIE: **174408-U**

Obs.: O equipamento não entrará na fábrica sem o número de ordem para análise do problema e sem etiqueta acima mencionada.

Manual de Instalação e Operação



RUDC INDÚSTRIA E COMERCIO LTDA
End.: José Gomes Caetano nº 811, Distrito Industrial Paulo Kinock – Leme/SP
Fone – (0xx19) 3572-1919Fax – (0xx19) 3572-2008
www.rudcbombas.com.br

Instruções Gerais para instalação Hidráulica

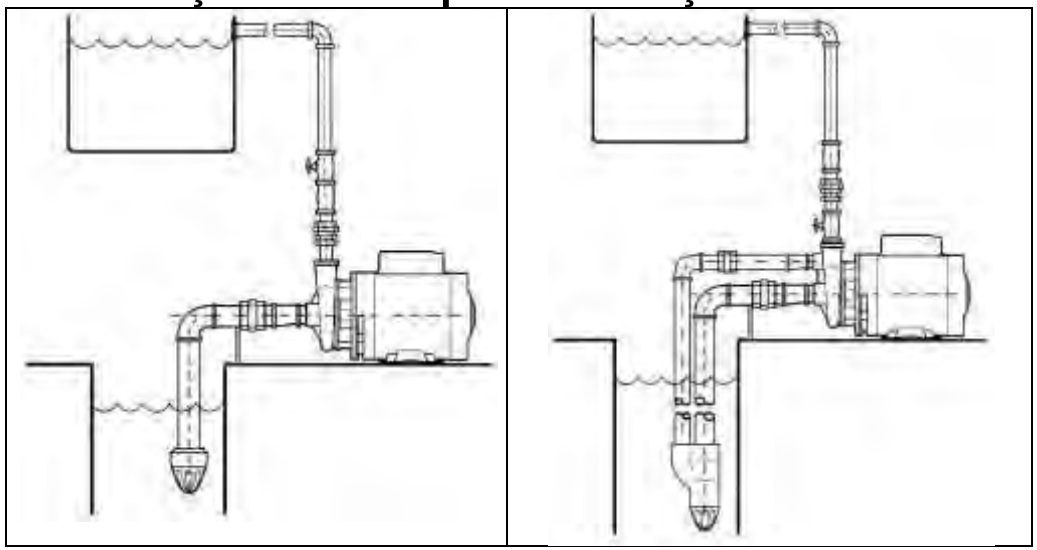

1- Instale a Bomba o mais próximo possível da fonte de captação de água.
2- Não expor a bomba à ação do tempo, protegendo-a do sol, chuva, etc.
3- O local onde a motobomba estiver instalada deve ser de fácil acesso.
4- Utilize o mínimo possível de conexões na instalação.
5- Faça um suporte de madeira ou tijolo para suportar o peso da canalização de sucção.
6- Use sempre a válvula de pé (fundo do poço) com bitola superior a da canalização de sucção e instale a válvula no mínimo 30 cm do fundo do local de sucção.
7- Vede todas as conexões com vedante apropriado, dando uma maior atenção à tubulação de sucção, evitando assim a entrada de ar.
8- Nunca reduza a bitola de sucção e recalque da bomba.
9- Os diâmetros das tubulações devem ser compatíveis com a vazão desejada.
10- Instale válvulas de retenção na tubulação de recalque quando a altura for igual ou maior que 20 m, ou em caso de recalque na horizontal, quando as perdas de carga exceder a 20 mca.

Instruções Gerais para instalação Elétrica

1- Para ligação correta do motor elétrico, observe na placa de identificação do motor o esquema compatível à voltagem da rede elétrica do local.
2- Faça o mesmo esquema de ligação correspondente à voltagem do local e indicações na plaqueta do motor.
3- Recomenda-se que a instalação de motores elétricos de baixa tensão, devem somente ser feitas por pessoas técnicas experientes que conheçam a cumpram as recomendações prescritas na norma brasileira de instalação elétrica de baixa tensão NBR 5410.
4- Em caso de motores trifásicos utilize chave contadora para proteção do mesmo.

Instruções para acionamento da bomba

1- Antes de conectar a tubulação de recalque à bomba, faça a escorva da mesma, preenchendo com água todo o corpo da bomba e a tubulação de sucção.
2- Nunca deixe sua motobomba operando sem água em seu interior.
3- Complete a instalação hidráulica do recalque.
4- Verifique novamente todas as instalações elétricas e hidráulicas antes de acionar a motobomba.
5- Observe logo na partida, pelo lado traseiro do motor, se este gira no sentido correto indicado pela seta no corpo da bomba. Caso contrario, inverta o giro do mesmo através dos fios de ligação do motor elétrico.

RUDC INDÚSTRIA E COMÉRCIO LTDA

2900 RPM - LINHA RUU/E

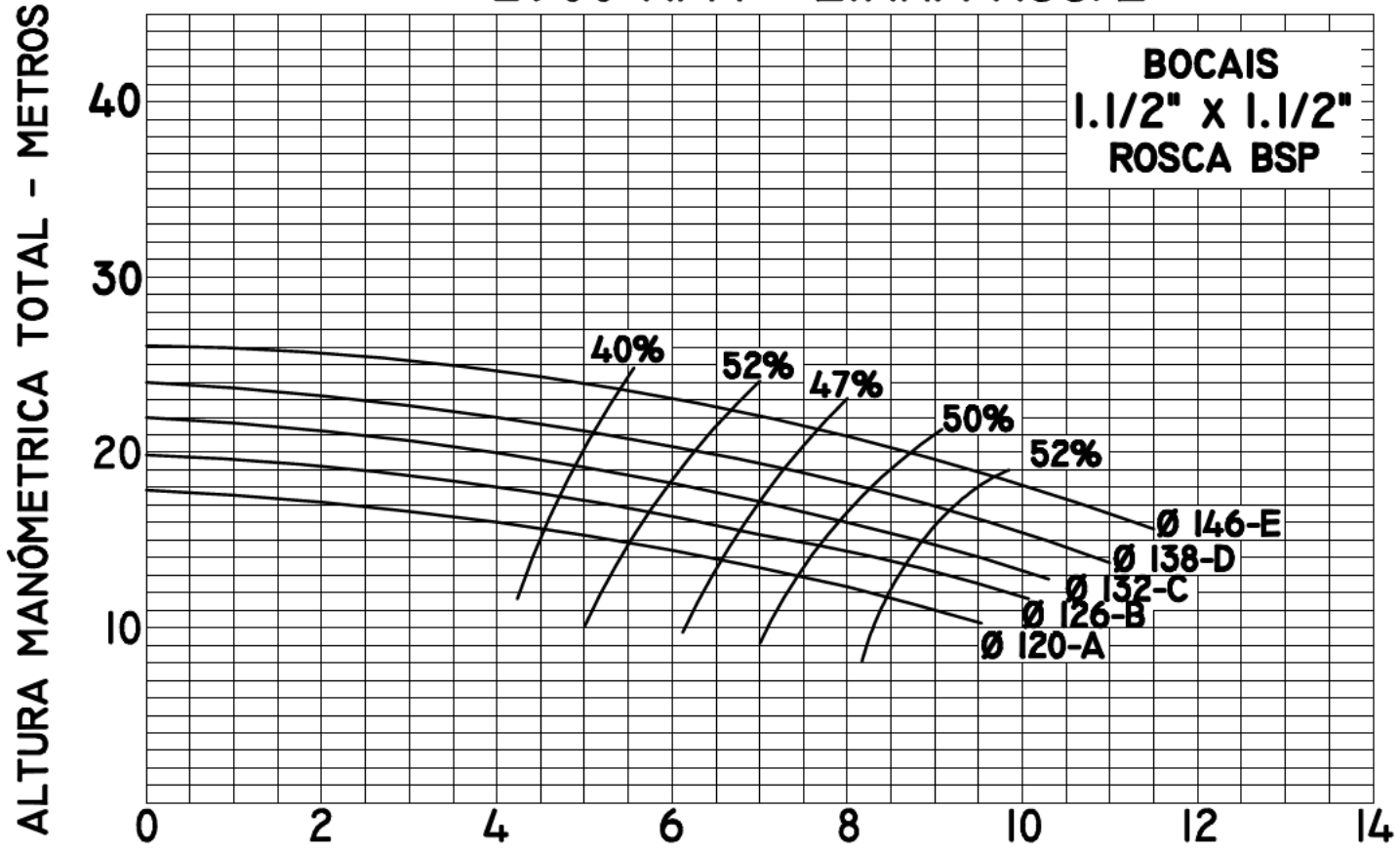

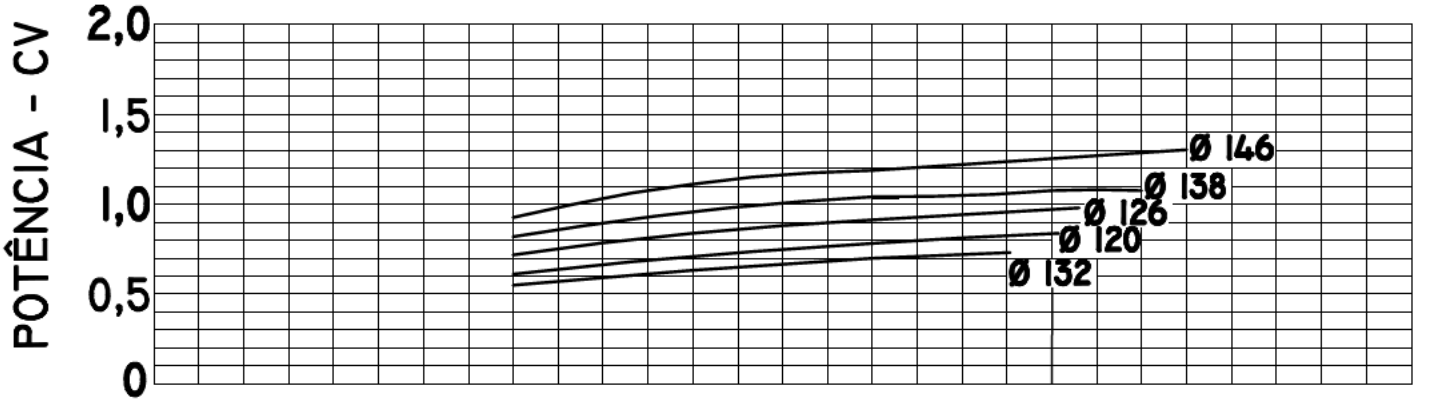

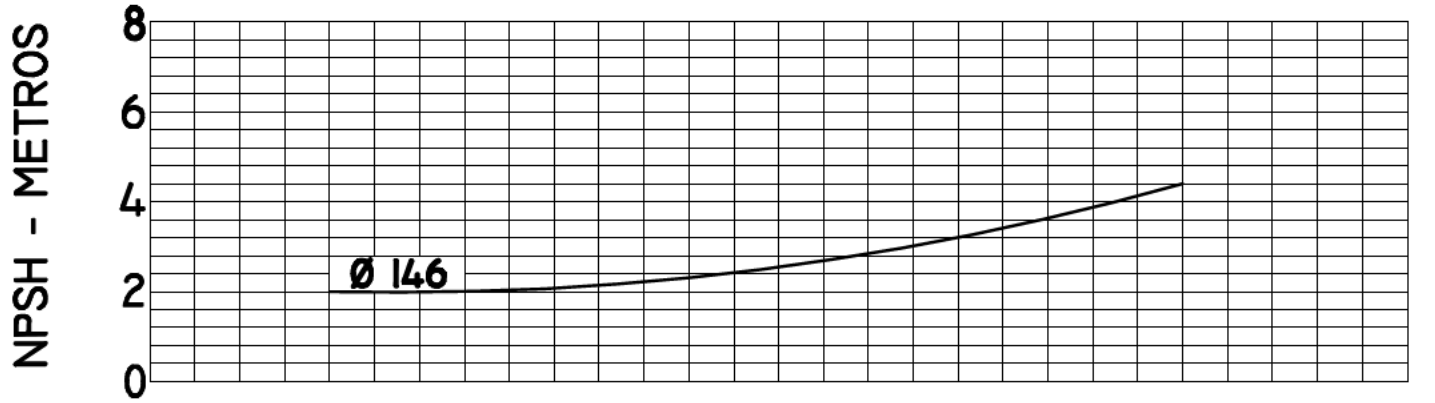

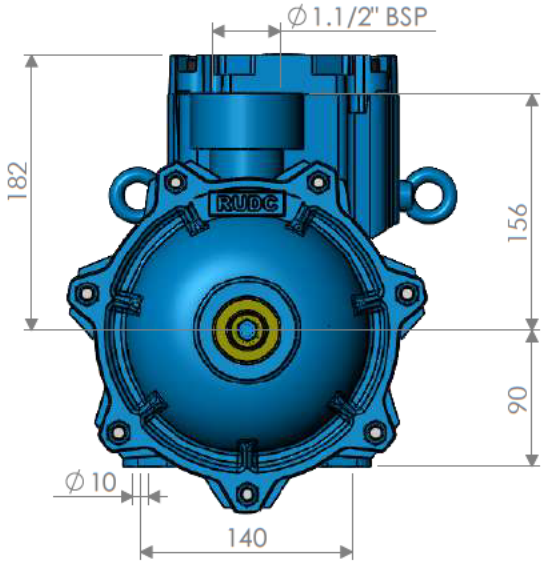

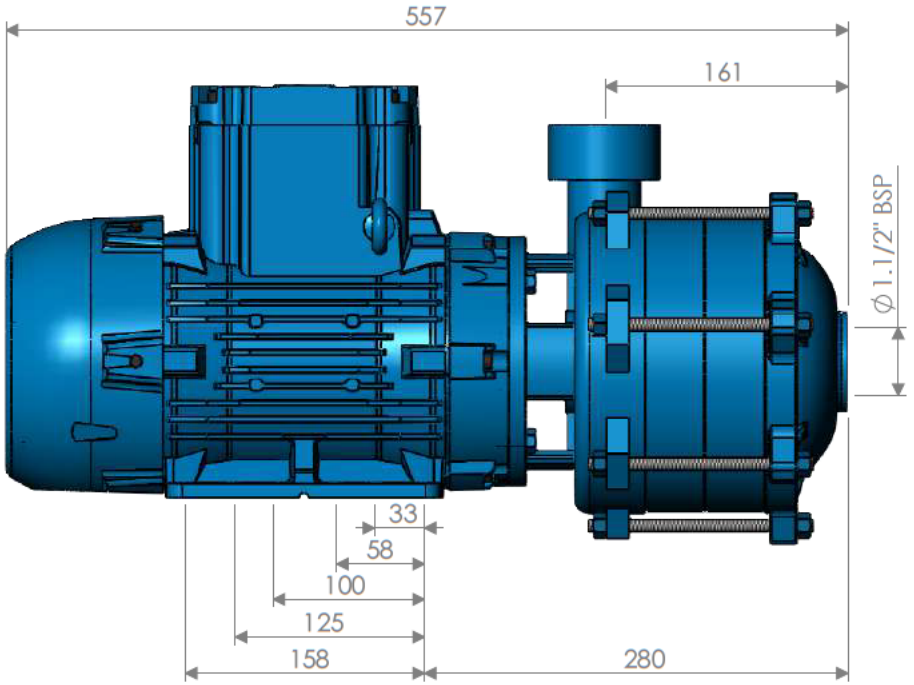

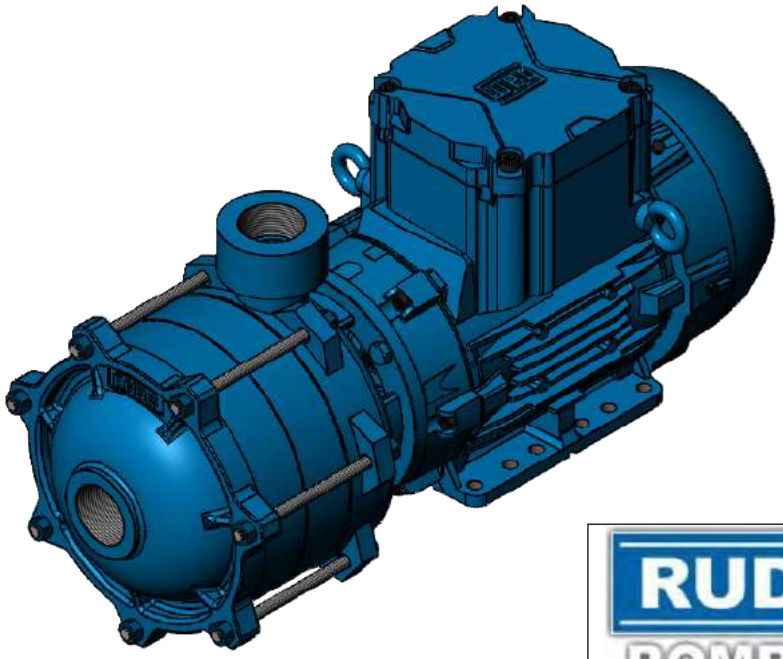

RUDC BOMBAS

CONJUNTO/PEÇA: MTBBA SRUU-3C7-50 Trifásico IP-55 W22Xdb DIMENSIONAL 90S_L_TOP				MATERIAL: VARIOS	SIMBOLOGIA TOLERANCIA ±		
DESENHO Nº: 00000	ELAB.	CLEBER	01/12/20	00	XX/XX/XX		
ESCALA: 1:5	APROV.	CLEBER	01/12/20	00	XX/XX/XX		
		NOME	DATA	REV.	DATA	VISTO	

Pos.	Descrição	Material	Quant.
1	PORCA 3/8" UNC	FERRO	14
2	VARÃO 3/8" UNC	FERRO	7
3	TAMPA RUU	ASTM-A48	1
4	PARAFUSO 5/16" X 3/4" UNC	AISI316	1
5	ARRUELA DO ROTOR	AISI316	1
6	ROTOR RUU SEM ANEL	ASTM-A48	2
7	ANEL O´RING RUU	VÍTON	3
8	BUCHA DIST. RUU	AISI316	2
9	ESTAGIO RUU	ASTM-A48	2
10	ROTOR RUU COM ANEL	ASTM-A48	1
11	SELO MECANICO 3/4"	VÍTON	1
12	CORPO RUU FC-184	ASTM-A48	1
13	PARAFUSO 3/8" X 3/4" UNC	FERRO	4
14	EIXO 3/4" FÊMEA RUU-3	AISI316	1
15	CHAVETA 3/16" RUU-3	AISI316	1

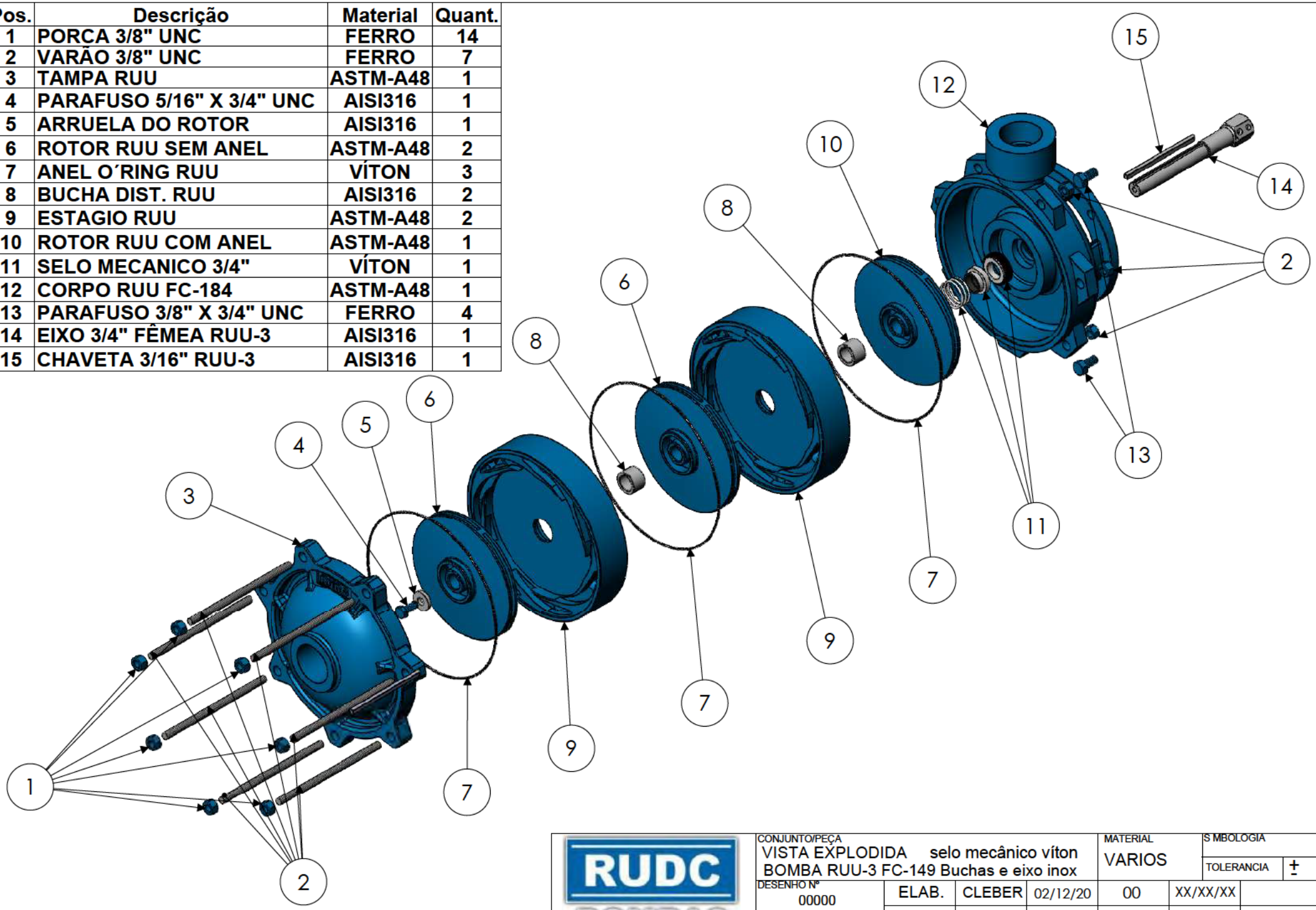

RUDC BOMBAS

CONJUNTO/PEÇA: VISTA EXPLODIDA selo mecânico víton BOMBA RUU-3 FC-149 Buchas e eixo inox				MATERIAL: VARIOS	SIMBOLOGIA	
					TOLERANCIA	±
DESENHO Nº: 00000	ELAB.	CLEBER	02/12/20	00	XX/XX/XX	
ESCALA: 1:5	APROV.	CLEBER	02/12/20	00	XX/XX/XX	
		NOME	DATA	REV.	DATA	VISTO

THIS IS AN UPDATED REVISION. THE PREVIOUS ONE MUST BE DISREGARDED.

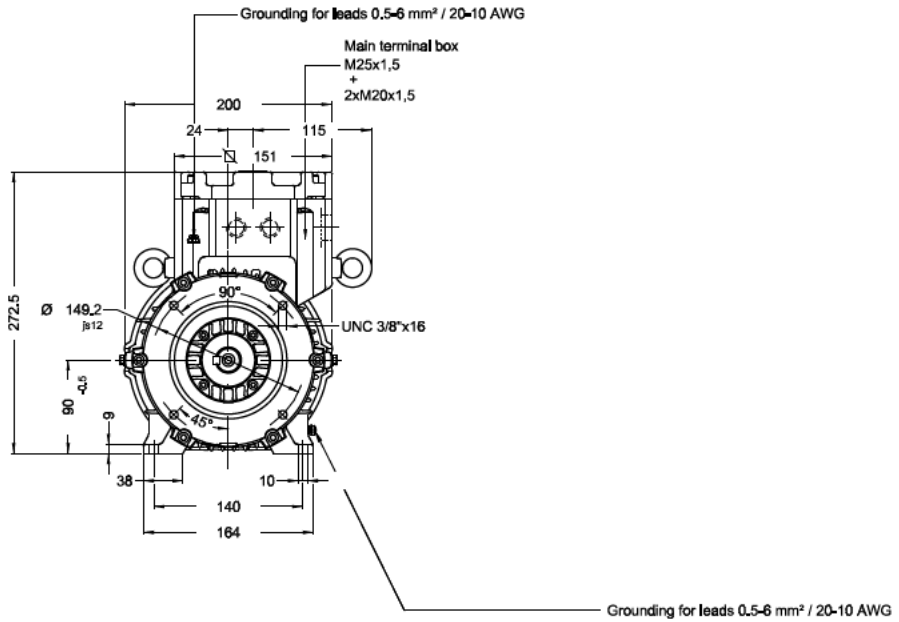

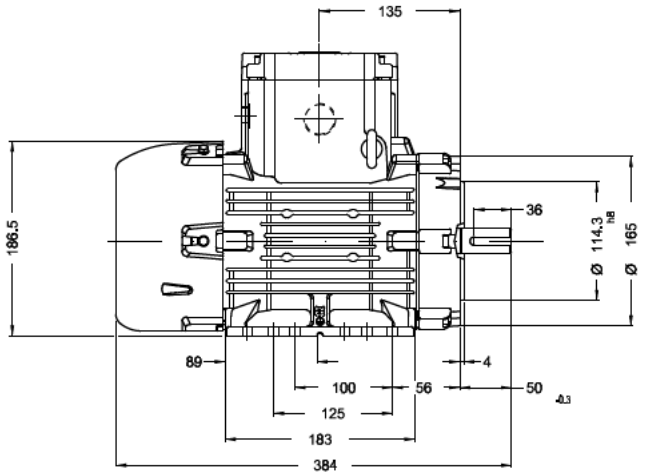

Color RAL 5009

Painting plan 205P

Mounting B34T

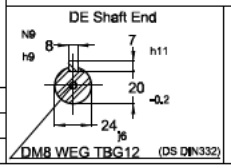

2,2 kW 02 Poles 50 Hz | A

RUDC INDUSTRIA E COMERCIO LTDA

ECM	LOC	SUMMARY OF MODIFICATIONS	EXECUTED	CHECKED	RELEASED	DATE	VER

EXECUTED	PRISCILA2	THREE-PHASE W22Xdb MOTOR	PREVIEW
CHECKED		FRAME 90S/L IP56 TEFC	WDD
RELEASED			
REL DT.		WMO Jaraguá do Sul Product Engineering	SHEET 1 / 1

Dimensions in mm

XME A3

WEG's property. Forbidden reproduction without previous authorization.

1 # EC - TYPE EXAMINATION CERTIFICATE

2 **Equipment or Protective System Intended for use in Potentially Explosive Atmospheres Directive 94/9/EC**

3 EC - Type Examination Certificate Number: **Baseefa13ATEX0079X**

4 Equipment or Protective System: **A Range of Induction Motors of Frame Size 90 to 132**

5 Manufacturer: **WEG Equipamentos Eletricos S.A**

6 Address: **Av. Prefeito Waldemar Grubba, 3000. Jaragua do Sul, SC, CEP: 89256-900, Brazil.**

7 This equipment or protective system and any acceptable variation thereto is specified in the schedule to this certificate and the documents therein referred to.

8 Baseefa, Notified Body number 1180, in accordance with Article 9 of the Council Directive 94/9/EC of 23 March 1994, certifies that this equipment or protective system has been found to comply with the Essential Health and Safety Requirements relating to the design and construction of equipment and protective systems intended for use in potentially explosive atmospheres given in Annex II to the Directive.

The examination and test results are recorded in confidential Report No. **GB/BAS/ExTR13.0109/00**

9 Compliance with the Essential Health and Safety Requirements has been assured by compliance with:

EN 60079-0: 2012 **EN 60079-1: 2007** **EN60079-7: 2007** **EN 60079-31: 2009**

except in respect of those requirements listed at item 18 of the Schedule.

10 If the sign "X" is placed after the certificate number, it indicates that the equipment or protective system is subject to special conditions for safe use specified in the schedule to this certificate.

11 This EC - TYPE EXAMINATION CERTIFICATE relates only to the design and construction of the specified equipment or protective system. Further requirements of the Directive apply to the manufacturing process and supply of this equipment or protective system. These are not covered by this certificate.

12 The marking of the equipment or protective system shall include the following :

Ⓔx II 2 GD **Ex d IIC T4 Gb Ta -55°C to + 80°C or Ex de IIC T4 Gb Ta -55°C to + 80°C**
Ex tb IIIC T125°C Db IP66 Ta -55°C to + 80°C see schedule

Baseefa Customer Reference No. **5886**

Project File No. **12/0260**

This document is issued by the Company subject to its General Conditions for Certification Services accessible at http://www.sgs.com/en/Terms-and-Conditions.aspx and the Supplementary Terms and Conditions accessible at http://www.baseefa.com/terms-and-conditions.asp. Attention is drawn to the limitation of liability, indemnification and jurisdiction issues defined therein. Any holder of this document is advised that information contained herein reflects the Company's findings at the time of its intervention only and within the limits of Client's instructions, if any. It does not necessarily indicate that the equipment may be used in particular industries or circumstances. The Company's sole responsibility is to its Client and this document does not exonerate parties to a transaction from exercising all their rights and obligations under the transaction documents. This document cannot be reproduced except in full, schedule included, without prior written approval of the Company. Any unauthorized alteration, forgery or falsification of the content or appearance of this document is unlawful and offenders may be prosecuted to the fullest extent of the law.

SGS Baseefa Limited
Rockhead Business Park, Staden Lane,
Buxton, Derbyshire SK17 9RZ
Telephone +44 (0) 1298 766600 Fax +44 (0) 1298 766601
e-mail info@baseefa.com web site www.baseefa.com
Registered in England No. 4305578.
Registered address: Rossmore Business Park, Ellesmere Port, Cheshire, CH65 3EN

Re-issued 25th October 2013 to replace original

R S SINCLAIR
GENERAL MANAGER
On behalf of SGS Baseefa Limited

13 **Schedule**

14 **Certificate Number Baseefa13ATEX0079X**

15 **Description of Equipment or Protective System**

The range of induction motor of frame size 90 to 132 comprises a stator frame, endshields and main and auxiliary terminal boxes all fabricated from cast iron. The single ended drive shaft has an external cooling fan at the non-drive end. The terminal box cover fasteners are grade 8.8/12.9 steel or grade A2/4-70 or 80 stainless steel.

The frames are provided with a terminal neck for the integral main terminal box. A single auxiliary terminal box may be attached to the side of the main terminal box. The wall between the terminal box and the motor frame is provided with flameproof potted cable bushings for the winding tails and auxiliary cables for thermal sensors etc. The terminal boxes may be designated flameproof Ex d, or increased safety Ex e.

The motors have rolling element bearings, are foot or flanged mounted for horizontal and vertical use and may be provided with anti-condensation heaters rated as indicated below.

The motors are rated from 220V to 1100V when supplied with an Ex d terminal box , or from 220V to 690V when supplied with an Ex e terminal box, 50/60Hz or variable frequency up to a maximum of 120Hz when supplied from a type VPWM, CFW09 or CFW11 invertors manufactured by WEG. The maximum voltage on the auxiliary terminals is 440V.

The motors have a maximum rating as indicated below for use in a maximum ambient temperature of 40°C when continuously rated for S1 duty and connected to a 3 phase supply having form and symmetry not worse than that defined in IEC 60034-1 and operated within the defined voltage and frequency limits for Zone A.

Frame size	90	100	112	132
Maximum output (kW)	3.0	4.0	7.5	11.0
Maximum output (kW) with permanent magnet and VFD	4.5	7.5	11.0	22.0
Poles	2 to 12			
Heater (W)	11	11	22	30

The motors are de-rated in accordance with the manufacturer's instructions for use with variable frequency supplies, a maximum ambient temperature between 40°C and 80°C, altitudes above 1000m, S2 to S9 duty and a service factor of 1.0 to 1.25.

The motors can be provided with various seal arrangements and materials for ingress protection IP55, IP65 and IP66.

Options include permanent magnet, a double ended shaft, integral leads, anti-condensation heaters, thermal protectors, forced ventilation and a breather-drain to IECEx CSA 12.0005U.

Cable entry holes are provided as specified on the certified drawings for the accommodation of flameproof cable entry devices, with or without the interposition of a flameproof thread adapter. Unused entries are to be fitted with suitable certified flameproof stopping plugs.

The cable entry devices, thread adapters and stopping plugs shall be suitable for the equipment, the cable and the conditions of use and shall be certified as Equipment (not a Component) under an EC Type Examination Certificate to Directive 94/9/EC.

When used in an explosive dust atmosphere the cable entry devices shall maintain the ingress protection of the enclosure

The motors may be alternatively marked for gas groups IIA, IIB I, dust groups IIIB, IIIA, temperature classifications of T3, and T2 without an increase in ambient temperature above 80°C, ingress protection IP5X, IP6X, gas only and dust only as indicated below.

⟨Ex⟩I M2 G Ex d I T* Ta -**°C to + **°C Mb

⟨Ex⟩II 2 D Ex tb III* T***°C Ta -**°C to + **°C Db IP**

16 Report Number

GB/BAS/ExTR13.0109/00.

17 Specific Conditions of Use

1 The flamepath gaps are less that those permitted by IEC60079-1 for gas group IIC and shall not be enlarged in service.

2 The motors may be provided with integral leads, which must be suitably protected and terminated within an enclosure suitable for the conditions of use.

3 When provided with a breather-drain to IECEx CSA 12.0005U the motors are excluded from Group I, and are limited to temperature classification T5 to T2 Ta -55°C to + 50°C, or T4 to T2 Ta -55°C to + 80°C, and have an IP rating of IP6X.

4 The maximum surface temperature was determined without a dust layer. The end user shall prevent a dust layer forming on the motors.

5 After de-energising a delay 60 minutes is required before opening.

18 Essential Health and Safety Requirements

All relevant Essential Health and Safety Requirements are covered by the standards listed at item 9.

19 Drawings and Documents

Number	Sheet	Issue	Date	Description
10001635698	1 to 12	0	27.09.13	Technical Description of Motors
10001625663	1	0	27.09.13	B.O.M. Metallic Components – Part 1
10001625663	1	0	27.09.13	B.O.M. Metallic Components – Part 2
10001625663	1	0	27.09.13	B.O.M. Non Metallic Components – Part 1
10001625663	1	0	27.09.13	B.O.M. Non Metallic Components – Part 2
10001638263	1	0	27.09.13	B.O.M Bushing
10001630456	1 & 2	00	27.09.13	Gaps m and k
10001630510	1 to 3	3	27.09.13	Flame Paths and gaps
10001583462	1	00	27.09.13	Flame Paths
10001557362	1	01	16.07.13	Flanges
10000857593	1	01	16.07.13	De-rating values
10001606239	1	01	27.09.13	Fan clearance
10001591378	1	01	16.07.13	Shaft Sealing Arrangements
10001611198	1	01	27.09.13	Terminal Box Details – Ex d
10001611402	1	02	10.10.13	Terminal Box Details – Ex de
10002018453	1	01	27.09.13	Warning Labels
10002018476	1	00	27.09.13	Rating Label Marking
10001611764	1	00	27.09.13	Bushing
10001638329	1 to 5	0	27.09.13	Technical Description of Bushing
10001632610	1	0	27.09.13	Power, Poles, Packing and Air Gap Data

Number	Sheet	Issue	Date	Description
10001612206	1	01	27.09.13	General Dimensions
10001560116	1	01	27.09.13	Permanent Magnet Details
10001605285	1	01	27.09.13	Heater and thermal probe details
10000874503	1	01	16.07.13	De-rating for Temperature and Altitude
10001632982	1	01	27.09.13	Forced Ventilation Details
10000962408	1	05	28.08.13	Seal Details
10001604928	1	01	27.09.13	Grounding Bush
10001613668	1	01	27.09.13	Assembly Components
10001589940	1	00	27.09.13	Drain Details
10000940500	1	01	16.07.13	Connection Nameplates
10000857543	1	01	16.07.13	Mounting Arrangements
10002008091	1 to 10	04	30.09.13	Analysis of Motor Temperature

1 # SUPPLEMENTARY EU - TYPE EXAMINATION CERTIFICATE

2 **Equipment or Protective System Intended for use in Potentially Explosive Atmospheres Directive 2014/34/EU**

3 Supplementary EU - Type Examination Certificate Number: **Baseefa13ATEX0079X/1**

3.1 In accordance with Article 41 of Directive 2014/34/EU, EC-Type Examination Certificates referring to 94/9/EC that were in existence prior to the date of application of 2014/34/EU (20 April 2016) may be referenced as if they were issued in accordance with Directive 2014/34/EU. Supplementary Certificates to such EC-Type Examination Certificates, and new issues of such certificates, may continue to bear the original certificate number issued prior to 20 April 2016

4 Product: **A Range of Induction Motors of Frame Size 90 to 132**

5 Manufacturer: **WEG Equipamentos Eletricos S.A**

6 Address: **Av. Prefeito Waldemar Grubba, 3000. Jaragua do Sul, SC, CEP: 89256-900, Brazil**

7 This supplementary certificate extends EC – Type Examination Certificate No. **Baseefa13ATEX0079X** to apply to products designed and constructed in accordance with the specification set out in the Schedule of the said certificate but having any variations specified in the Schedule attached to this certificate and the documents therein referred to.

8 SGS Baseefa, Notified Body number 1180, in accordance with Article 17 of Directive 2014/34/EU of the European Parliament and of the Council, dated 26 February 2014, certifies that the product, as modified by this supplementary certificate, has been found to comply with the Essential Health and Safety Requirements relating to the design and construction of products intended for use in potentially explosive atmospheres given in Annex II to the Directive.

SGS Baseefa Customer Reference No. **5886** Project File No. **17/0375**

This document is issued by the Company subject to its General Conditions for Certification Services accessible at http://www.sgs.com/en/Terms-and-Conditions.aspx and the Supplementary Terms and Conditions accessible at http://www.sgs.com/SGSBaseefa/Terms-and-Conditions.aspx. Attention is drawn to the limitation of liability, indemnification and jurisdiction issues defined therein. Any holder of this document is advised that information contained herein reflects the Company's findings at the time of its intervention only and within the limits of Client's instructions, if any. It does not necessarily indicate that the equipment may be used in particular industries or circumstances. The Company's sole responsibility is to its Client and this document does not exonerate parties to a transaction from exercising all their rights and obligations under the transaction documents. This document cannot be reproduced except in full, schedule included, without prior written approval of the Company. Any unauthorized alteration, forgery or falsification of the content or appearance of this document is unlawful and offenders may be prosecuted to the fullest extent of the law.

SGS Baseefa Limited
Rockhead Business Park, Staden Lane,
Buxton, Derbyshire SK17 9RZ
Telephone +44 (0) 1298 766600 Fax +44 (0) 1298 766601
e-mail baseefa@sgs.com web site www.sgs.co.uk/baseefa
Registered in England No. 4305578.
Registered address: Rossmore Business Park, Ellesmere Port, Cheshire, CH65 3EN

R S SINCLAIR PP DBREARLEY
TECHNICAL MANAGER
On behalf of SGS Baseefa Limited

13 **Schedule**

14 **Certificate Number Baseefa13ATEX0079X/1**

15 Description of the variation to the Product

Variation 1.1

To allow the introduction of new conductor specification for the main and auxiliary cables, size 20AWG to 10AWG together with correcting the type 51 cable bushing conductor size parameters

16 Report Number

SGS Baseefa Report Number: GB/BAS/ExTR17.0189/00

17 Specific Conditions of Use

None additional to those listed previously

18 Essential Health and Safety Requirements

Compliance with the Essential Health and Safety Requirements is not affected by this variation.

19 Drawings and Documents

Number	Sheet	Issue	Date	Description
10001638329	1 of 5	1	04/07/2017	Technical Description of W22X Bushings Frame sizes 90 to 132

This drawing is common to this certificate and is held with IECEx BAS 13.0045X.

1 # SUPPLEMENTARY EU - TYPE EXAMINATION CERTIFICATE

2 **Equipment or Protective System Intended for use in Potentially Explosive Atmospheres Directive 2014/34/EU**

3 Supplementary EU - Type Examination Certificate Number: **Baseefa13ATEX0079X/2**

3.1 In accordance with Article 41 of Directive 2014/34/EU, EC-Type Examination Certificates referring to 94/9/EC that were in existence prior to the date of application of 2014/34/EU (20 April 2016) may be referenced as if they were issued in accordance with Directive 2014/34/EU. Supplementary Certificates to such EC-Type Examination Certificates, and new issues of such certificates, may continue to bear the original certificate number issued prior to 20 April 2016.

4 Product: **A Range of Induction Motors of Frame Size 90 to 132**

5 Manufacturer: **WEG Equipamentos Eletricos S.A**

6 Address: **Av. Prefeito Waldemar Grubba, 3000. Jaragua do Sul, SC, CEP: 89256-900, Brazil**

7 This supplementary certificate extends EC – Type Examination Certificate No. Baseefa13ATEX0079X to apply to products designed and constructed in accordance with the specification set out in the Schedule of the said certificate but having any variations specified in the Schedule attached to this certificate and the documents therein referred to.

8 SGS Baseefa, Notified Body number 1180, in accordance with Article 17 of Directive 2014/34/EU of the European Parliament and of the Council, dated 26 February 2014, certifies that the product, as modified by this supplementary certificate, has been found to comply with the Essential Health and Safety Requirements relating to the design and construction of products intended for use in potentially explosive atmospheres given in Annex II to the Directive.

9 Item 9 of the original Certificate is replaced by "Compliance with the Essential Health and Safety Requirements has been assured by compliance with:

EN IEC 60079-0: 2018 **EN 60079-1: 2014** **EN 60079-7: 2015** **EN 60079-31: 2014**

except in respect of those requirements listed at item 18 of the Schedule."

12 The marking of the equipment has changed from the original Certificate and shall include the following:

Ⓔx II 2 G Ex db IIC T4 Gb or Ex db eb IIC T4 Gb
Ⓔx II 2 D Ex tb IIIC T125°C Db IP (see original schedule)
Tamb -55°C to +80°C

SGS Baseefa Customer Reference No. **5886** Project File No. **18/0404**

This document is issued by the Company subject to its General Conditions for Certification Services accessible at http://www.sgs.com/en/Terms-and-Conditions.aspx and the Supplementary Terms and Conditions accessible at http://www.sgs.com/SGSBaseefa/Terms-and-Conditions.aspx. Attention is drawn to the limitation of liability, indemnification and jurisdiction issues defined therein. Any holder of this document is advised that information contained herein reflects the Company's findings at the time of its intervention only and within the limits of Client's instructions, if any. It does not necessarily indicate that the equipment may be used in particular industries or circumstances. The Company's sole responsibility is to its Client and this document does not exonerate parties to a transaction from exercising all their rights and obligations under the transaction documents. This document cannot be reproduced except in full, schedule included, without prior written approval of the Company. Any unauthorized alteration, forgery or falsification of the content or appearance of this document is unlawful and offenders may be prosecuted to the fullest extent of the law.

SGS Baseefa Limited
Rockhead Business Park, Staden Lane,
Buxton, Derbyshire SK17 9RZ
Telephone +44 (0) 1298 766600 Fax +44 (0) 1298 766601
e-mail baseefa@sgs.com web site www.sgs.co.uk/sgsbaseefa
Registered in England No. 4305578.
Registered address: Rossmore Business Park, Ellesmere Port, Cheshire, CH65 3EN

D BREARLEY
Certification Manager

R S SINCLAIR
TECHNICAL MANAGER
On behalf of SGS Baseefa Limited

13 **Schedule**

14 **Certificate Number Baseefa13ATEX0079X/2**

15 Description of the variation to the Product

Variation 1.1

The manufacturer requests a variation to confirm that the equipment has been reviewed against the requirements of EN IEC 60079-0: 2018, EN 60079-1: 2014, EN 60079-7: 2015 and EN 60079-31: 2014.

16 Report Number

GB/BAS/ExTR18.0315/00

17 Specific Conditions of Use

In addition to those listed previously

1. Cable glands shall be suitably ATEX certified as equipment.

18 Essential Health and Safety Requirements

Compliance with the Essential Health and Safety Requirements is affected as follows.

Clause	Subject	Compliance
1.2.7	LVD type requirements	Standards require manufacturer's declaration, supplied.
1.2.8	Overloading of equipment (protection relays, etc.)	Covered by installation rules and manufacturer's instructions. Electrical ratings have been included on the instructions provided.
1.4.1	External effects	The Purchaser should make the manufacturer aware of such issues. Covered in Instructions
1.4.2	Aggressive substances, etc.	The Purchaser should make the manufacturer aware of such issues. Covered in Instructions

19 Drawings and Documents

Number	Sheet	Issue	Date	Description
10002018476	1 of 1	01	11.07.2018	Nameplate Frame Size 90 to 132
10002018453	1 of 1	02	11.07.2018	Warning Labels Frame Size 90-132
*10001589940	1 of 1	01	11.07.2018	Drain Dimensions
10001625663	1 to 4	01	09.07.2018	BOM Motor Metallic Components
10001635698	1 to 12	01	09.07.2018	Technical Description of W22X Explosion Proof Motors Line (Ex db/de/tb)
10001638329	1 to 5	02	09.07.2018	Technical Descriptive of W22X Bushings

These drawings are common to Baseefa13ATEX0079X and held with IECEX BAS 13.0045X.

*This drawing is common to Baseefa13ATEX0079X, IECEx BAS 13.0045X, Baseefa13ATEX0288X and IECEx BAS 13.0142X, and is held with IECEx BAS 13.0045X

1 # SUPPLEMENTARY EU - TYPE EXAMINATION CERTIFICATE

2 **Equipment or Protective System Intended for use in Potentially Explosive Atmospheres Directive 2014/34/EU**

3 Supplementary EU - Type Examination Certificate Number: **Baseefa13ATEX0079X/3**

3.1 In accordance with Article 41 of Directive 2014/34/EU, EC-Type Examination Certificates referring to 94/9/EC that were in existence prior to the date of application of 2014/34/EU (20 April 2016) may be referenced as if they were issued in accordance with Directive 2014/34/EU. Supplementary Certificates to such EC-Type Examination Certificates, and new issues of such certificates, may continue to bear the original certificate number issued prior to 20 April 2016

4 Product: **A Range of Induction Motors of Frame Size 90 and 132**

5 Manufacturer: **WEG Equipamentos Eletricos S.A**

6 Address: **Av. Prefeito Waldemar Grubba, 3000. Jaragua do Sul, SC, CEP: 89256-900, Brazil**

7 This supplementary certificate extends EC – Type Examination Certificate No. Baseefa13ATEX0079X to apply to products designed and constructed in accordance with the specification set out in the Schedule of the said certificate but having any variations specified in the Schedule attached to this certificate and the documents therein referred to.

8 SGS Fimko Oy, Notified Body number 0598, in accordance with Article 17 of Directive 2014/34/EU of the European Parliament and of the Council, dated 26 February 2014, certifies that the product, as modified by this supplementary certificate, has been found to comply with the Essential Health and Safety Requirements relating to the design and construction of products intended for use in potentially explosive atmospheres given in Annex II to the Directive.

8.1 The original certificate was issued by SGS Baseefa Ltd (UK Notified Body 1180). It, and any supplements previously issued by SGS Baseefa Ltd have been transferred to the supervision of SGS Fimko Oy (EU Notified Body 0598). The original certificate number is retained.

SGS Fimko Oy Customer Reference No. **5886** Project File No. **19/0460**

This document is issued by the Company subject to their General Conditions for Certification Services accessible at http://www.sgs.com/en/Terms-and-Conditions.aspx. Attention is drawn to the limitation of liability, indemnification and jurisdiction issues defined therein. Any holder of this document is advised that information contained herein reflects the Company's findings at the time of their intervention only and within the limits of Client's instructions, if any. It does not necessarily indicate that the equipment may be used in particular industries or circumstances. The Company's sole responsibility is to its Client and this document does not exonerate parties to a transaction from exercising all their rights and obligations under the transaction documents. This document cannot be reproduced except in full, schedule included, without prior written approval of the Company. Any unauthorized alteration, forgery or falsification of the content or appearance of this document is unlawful and offenders may be prosecuted to the fullest extent of the law.

SGS Fimko Oy
Särkiniementie 3
P.O. Box 30 FI-00211 Helsinki Finland
Telephone +358 (0)9 696 361 Fax. +358 (0)9 692 5474
e-mail sgs.fimko@sgs.com
web site www.sgs.fi
Business ID 0978538-5

R S SINCLAIR
Authorised Signatory for SGS Fimko Oy

13 **Schedule**

14 **Certificate Number Baseefa13ATEX0079X/3**

15 Description of the variation to the Product

Variation 3.1

To allow minor updates for wall thicknesses, flange information, product design, voltage range, number of poles, grounding connections and section, and terminal box options.

Variation 3.2

To allow the introduction of optional grease, grounding plug, terminal blocks and temperature sensors.

Variation 3.3

To update information regarding the VFD.

Variation 3.4

Update to the notified body number i.e 1180 to 0598.

Variation 3.5

Update certificate details to include, mining, NEMA option and optional conditions.

Variation 3.6

To allow the introduction of a new terminal blocks to be used within the terminal box.

16 Report Number

GB/BAS/ExTR19.0297/00

17 Specific Conditions of Use

Additional to those listed previously

1. When fitted with the separated terminal box a suitably ATEX Ex equipment certified cable entry device may be provided by the manufacturer and installed with cable in compliance with EN 60079-14.

18 Essential Health and Safety Requirements

Compliance with the Essential Health and Safety Requirements is not affected by this variation.

19 Drawings and Documents

Number	Sheet	Issue	Date	Description
10001635698	1 to 13	02	18.10.2019	Technical Descriptive of W22X Explosion Proof Motors Line (Ex db/db eb/tb)
10001632610	1 of 1	3	20/08/2019	Exd Electrical Project
*10001557362	1 of 1	02	27.09.2019	Flange Dimensions
*10000857593	1 of 1	02	05.12.2019	Derating Induction Motor
10001625663	1 to 6 inclusive	02	11/06/2019	BOM-C1b
10002018476	1 of 1	3	27.09.2019	Nameplate
10002018453	1 of 1	4	27.09.2019	Warning Label
**10006682317	1 of 1	00	12.11.2019	Terminal Block Dimension
10001612206	1 of 1	02	27.09.2019	General Information
**10006696115	1 of 1	00	18.10.2019	Separated Terminal Box
*10002008091	1 to 10 inclusive	5	29.09.2019	Examples of Analysis of The Motor Temperature x Maximum External Temperature
***10000940500	1 of 1	03	12.11.2019	Ex db W22X Additional Nameplates and sticks

*These drawings are common to IECEx BAS 13.0008X, Baseefa13ATEX0016X and IECEx BAS 13.0045X, and are held with IECEx BAS 13.0008X.

**This drawing is common to IECEx BAS 13.0045X, Baseefa13ATEX0288X and is held with IECEx BAS 13.0142X.

***This drawing is common to IECEx BAS 13.0045X, IECEx BAS 13.0142X, Baseefa13ATEX0288X, Baseefa13ATEX0016X, and is held with IECEx BAS 13.0008X.

These drawing are common to and held with IECEx BAS 13.0045X.

Meccanotecnica
Umbra / Brasil
a Story of Excellence

CERTIFICADO DE QUALIDADE E CONFORMIDADE/ QUALITY CERTIFICATE

DATA/ *DATE*	**CÓDIGO PRODUTO MTU/** *MTU PRODUCT CODE*	**QUANTIDADE /** *QUANTITY*
10/09/2019	*97643*	*200 pcs*

☐ **AMOSTRA/***SAMPLING*	☒ **PRODUÇÃO SÉRIE/***PRODUCTION* **Lote/Batch nº PR0205716**

MECANOTÉCNICA DO BRASIL declara que o produto indicado acima:

- *foi controlado respeitando-se o plano de amostragem aplicável (segundo os procedimentos internos MTU);*
- *apresenta-se conforme às nossas especificações;*

Os registros dos controles sistemáticos, que asseguram a conformidade do produto às especificações, são conservados nos arquivos da Mecanotécnica pelo período de cinco anos e serão disponibilizados para consulta aos Clientes que solicitarem formalmente.

MECANOTÉCNICA DO BRASIL states that subject product:

- *has been controlled in accordance with applicable sampling plan (following our internal Procedure);*
- *is in compliance with our specifications;*

Systematic control records that assure product conformity according to specification will be archived in MTU for five years and are available to be checked by Customers if they ask for them.

Inspetor CQ/*ICQ Inspector*

NOME/*NAME*	**ASS./***SIGNATURE*
ALESSANDRA MORAIS	Alessandra morais

Mecanotécnica do Brasil Indústria e Comércio Ltda
Rua João Maria Góes 399 – São José dos Pinhais/PR – CEP 83060-206
Tel. +55 (41) 3381 2600 – Fax +55 (41) 3381 2621
Grupo Meccanotecnica Umbra SpA - Italy
www.mecanotecnica.com.br

ANOTAÇÕES:

Rua Professor José Gomes Caetano nº 811
Pólo Indl. Paulo Kinock, Leme – SP .
Fone: (19) 3572-9191 (PABX) FAX: (19) 3572-9199
www.rudcbombas.com.br
fernando@rudcbombas.com.br

DATABOOK RUDC BOMBAS

RUDC

BOMBAS



MODELO SRGC-10-50
Trifásico 10,0 CV 50Hz
IP-55 W22Xdb Explosão

Sinônimo de Qualidade,
Seriedade e Profissionalismo.

www.rudcbombas.com.br

Rudc Indústria e Comércio Ltda

CUIDADOS COM A INSTALAÇÃO

01 – LOCALIZAÇÃO:

Determine antecipadamente e com exatidão o local onde será instalado a bomba.

2 – PROTEÇÃO:

A bomba deverá ser instalada em local de fácil acesso para eventual manutenção, ventilado e ao abrigo da chuva e intemperismos. Caso a fiação tenha de ficar a mostra, esta deverá ser protegida por cunduites.

3 – ENERGIZAÇÃO:

Verifique que o fornecimento de energia elétrica seja compatível com as característica do motor acoplado a bomba.

4 – ATERRAMENTO:

É altamente recomendado o estabelecimento de um aterramento do motor elétrico.

5- QUADRO DE ENTRADA DE ENERGIA:

Nunca ligar a bomba em ramais de energia secundários ou tomadas. Leve a fiação elétrica do Quadro de Energia diretamente até a bomba, mantendo sempre a bitola uniforme.

Rua Prof. José Gomes Caetano, 811 Distrito Industrial, Leme/SP, CEP: 13612-392.
CNPJ: 61.008.173/0001-40 Fone: (19) 3572-9191 IE: 415.052.478.115

Curta nossa página no facebook

www.rudcbombas.com.br
fernando@rudcbombas.com.br

www.facebook.com.br/rudcbombas.

Rudc Indústria e Comércio Ltda

INSTALAÇÃO

1 – HIDRÁULICA:

Tubulações hidráulicas, sucção e recalque, recomenda-se que sejam montadas com apoio, afim de não serem transferidos pesos a bombas.

Não se deve utilizar tubulação com diâmetro inferiores aqueles encontrados na bomba. Deve-se optar por bitolas maiores para, com isso, melhorar o rendimento do equipamento.

2 – ELÉTRICA:

Evite acidentes. Verifique a tensão de suas instalações elétricas. O esquema de ligação impresso na plaqueta de identificações do motor, mostra a forma correta de ligação dos terminais do motor a instalação elétrica, nunca ligue em tomadas ramais secundários.

É recomendada a instalação de uma chave de partida com contador e relé de sobrecarga, para promover a proteção dos motores elétricos, mono ou trifásico. A falta desta proteção nos motores trifásicos ocasionará a perda da garantia do equipamento, em caso de danos ocasionados por falhas elétricas.

As emendas devem ser feitas com fios novos ou bem limpos, com varias voltas bem apertadas, para haver um contato suficientemente bom. Use fitas isolantes de boa qualidade e verifique que as emendas estejam bem isoladas.

FUNCIONAMENTO

Concluídas as instalações elétricas e hidráulicas, proceda da seguintes forma:

1°) Completar o corpo com o liquido a ser bombeado;

2°) Dar a partida no motor;

3°) Verifique o sentido de rotação do equipamento;

4°) Aguardar alguns minutos para a escorva da bomba.

Rua Prof. José Gomes Caetano, 811 Distrito Industrial, Leme/SP, CEP: 13612-392.
CNPJ: 61.008.173/0001-40 Fone: (19) 3572-9191 IE: 415.052.478.115

Curta nossa página no facebook

www.rudcbombas.com.br
fernando@rudcbombas.com.br

www.facebook.com.br/rudcbombas.

Rudc Indústria e Comércio Ltda

PROVIDÊNCIAS PARA A PARADA DA BOMBA

1° - Fechar o registro da tubulação de recalque.

2° - Fechar o registro de sucção quando houver necessidade de manutenção.

3° - Desligar o acionador observando a parada gradual do equipamento.

4° - Fechar tubulação auxiliares quando houver.

MANUTENÇÃO DO MANCAL

1° - A primeira troca de óleo deve ser feita após as primeiras 250/300 horas de trabalho, a segunda troca deve ser feita após as 1800 horas de trabalho e a partir daí a cada 7000 horas de trabalho.

2° - O mancal deve ser lavado a cada dois anos.

3° - Após certificar-se de que o mesmo está livre de sujeira e umidade, abastecer o suporte com óleo até que o nível fique entre as marcas existentes no indicador de nível de óleo.

ÓLEO RECOMENDADO PARA O MANCAL

Fabricante: Ipiranga. **Motor 4 polos (1750RPM) IPITUR AW - 68**

Motor 2 polos (3500RPM) IPITUR AW - 46

Rua Prof. José Gomes Caetano, 811 Distrito Industrial, Leme/SP, CEP: 13612-392.
CNPJ: 61.008.173/0001-40 Fone: (19) 3572-9191 IE: 415.052.478.115

Curta nossa página no facebook

www.rudcbombas.com.br
fernando@rudcbombas.com.br

www.facebook.com.br/rudcbombas.

Rudc Indústria e Comércio Ltda

PROBLEMAS E CAUSAS PROVÁVEIS

TIPO DE PROBLEMA	CAUSAS PROVAVEIS
O motor gira, mas o equipamento não bombeia ou não apresenta vazão suficiente.	1/2/3/4/5/6/7/8/10
O motor gira, porém o bombeamento é interrompido.	1/3/4/5/6
O equipamento vibra.	7/9/11/12/13/14/15/16
O motor não atinge a rotação de trabalho.	23/24
Superaquecimento do motor.	7/9/15/16/19/21/23/24/25

CAUSAS PROVÁVEIS

1 – A bomba não foi escorvada ou a escorva não foi bem realizada.

2 – Excessiva altura de sucção.

3 – Não há liquido.

4 – Entrada de ar nas conexões.

5 – Rotor ou tubulação entupidos.

6 – Válvula de pé (quando usada) defeituosa, muito pequena, mal instalada ou entupida.

7 – Motor com rotação invertida.

8 – Excessiva altura manométrica.

9 – Altura manométrica inferior à indicada.

10 – Rotor ou tubulação de diâmentro inferior.

11 – Fixação inadequada.

Rudc Indústria e Comércio Ltda

12 – Tubulação sem apoio próprio.

13 – Presença de corpo estranhos.

14 – Cavitação (bomba superdimensionada).

15 – Rotor ou eixo empenados ou atritando com partes estacionarias.

16 – Rolamentos de esfera do motor e ou mancal com desgaste ou danificados.

17 – Falta de corrente elétrica.

18 – Platinado desregulado (motores monofásicos).

19 – Capacitor fraco (motores monofásicos).

20 – Centrifugo defeituoso (motores monofásicos).

21 – Ligação elétrica errada ou com mau contato.

22 – Chave magnética defeituosa.

23 – Baixa tensão.

24 – Bitola do fio muito fina ou inadequada (vide catálogo RUDC BOMBAS).

25 – Sobre-tensão.

Rua Prof. José Gomes Caetano, 811 Distrito Industrial, Leme/SP, CEP: 13612-392.
CNPJ: 61.008.173/0001-40 Fone: (19) 3572-9191 IE: 415.052.478.115

Curta nossa página no facebook

www.rudcbombas.com.br
fernando@rudcbombas.com.br

www.facebook.com.br/rudcbombas.

Rudc Indústria e Comércio Ltda

CERTIFICADO DE QUALIDADE

Certificado : 06222/20.
Cliente : Reconditec Sistemas e Participações Ltda
Produto : Motobomba **SRGC-10-50** em **ferro fundido ASTM A48 CL30, eixo em aço inox 316 CF8M,** motor **10,0CV, trifásico IP-55 à prova de explosão,** 50hz, 2 polos, 2900RPM, 440v, caixa de ligação B34T no topo, selo mecânico em **viton com as faces em carvão x cerâmica**.
Sucção : 3” Flangeada Rosca BSP.
Recalque : 2.1/2” Flangeada Rosca BSP.

Certificamos que o produto, acima descriminado, é fabricado conforme especificações de nossa Engenharia dentro das normas internas e submetidos a ensaio hidrostático.

DADOS TÉCNICOS

Componentes	**Especificações dos Materiais**
Corpo	: Ferro Fundido ASTM A48 CL30.
Rotor	: Ferro Fundido ASTM A48 CL30.
Eixo	: Aço Inox 316 CF8M.
Intermediaria	: Ferro Fundido ASTM A48 CL30.
Selo mecânico	: 1.1/4” viton com as faces carvão x cerâmica
Motor Elétrico	: WEG 10,0HP IP-55 à prova de explosão, 50Hz, 2 polos 2900RPM, 400v

TESTE HIDROSTÁTICO / PNEUMÁTICO

Pressão de Teste na Vedação 7,0 Kgf/cm²



Controle de Qualidade

Rua Prof. José Gomes Caetano, 811 Distrito Industrial, Leme/SP, CEP: 13612-392.
CNPJ: 61.008.173/0001-40 Fone: (19) 3572-9191 IE: 415.052.478.115

Curta nossa página no facebook

www.rudcbombas.com.br
fernando@rudcbombas.com.br

www.facebook.com.br/rudcbombas.

Rudc Indústria e Comércio Ltda

CERTIFICADO DE TESTE HIDROSTÁTICO

Nº 0048588/20

CLIENTE	Alpina Equipamentos Industriais Ltda.		
		ITEM	01
BOMBA	SRGC-10-50		
MATERIAL BOMBA	Bomba em ferro fundido ASTM A48 CL30, eixo aço inox. SM viton.		

EQUIPAMENTO	GRADUAÇÃO
MANOMETRO	0 A 12 kgf/cm²

LIQUIDO TESTE	TEMPERATURA	PRESSÃO TESTE	TEMPO TESTE
ÁGUA	25º C	7kgf/cm²	20 min

Critério de aceitação conforme IO 019



Controle de Qualidade

Rua Prof. José Gomes Caetano, 811 Distrito Industrial, Leme/SP, CEP: 13612-392.
CNPJ: 61.008.173/0001-40 Fone: (19) 3572-9191 IE: 415.052.478.115

Curta nossa página no facebook

www.rudcbombas.com.br
fernando@rudcbombas.com.br

www.facebook.com.br/rudcbombas.

Rudc Indústria e Comércio Ltda

PEÇAS SOBRESSALETES RECOMENDADAS

Modelo SRGC-10-50

ITEM	DESCRIÇÃO	QUANTIDADE
01	Corpo	1
02	Rotor diam. 210mm furo 22,22”	1
03	Intermediaria longa	1
04	Semi eixo de adaptação JM	1
05	Anel O´ring viton	1
09	Selo mecânico 1.1/4” de viton X carvao	1

Rua Prof. José Gomes Caetano, 811 Distrito Industrial, Leme/SP, CEP: 13612-392.
CNPJ: 61.008.173/0001-40 Fone: (19) 3572-9191 IE: 415.052.478.115

Curta nossa página no facebook

www.rudcbombas.com.br
fernando@rudcbombas.com.br

www.facebook.com.br/rudcbombas.

GARANTIA

Este certificado de Garantia é a sua segurança de ter adquirido um produto comercializado através de nossos distribuidores e representantes designados pela RUDC ÍNDUSTRIA E COMÉRCIO LTDA.
A RUDC ÍNDUSTRIA E COMÉRCIO LTDA., garante, nos termos aqui definidos, os produtos RUDC pelo prazo de 12(doze) meses, a partir da data de faturamento, exceto o modelo PRD no qual a garantia é de 6 meses, desde que, não tenha sido alterado e apresentem comprovadamente defeitos de fabricação, falhas de material ou mau funcionamento. Os equipamentos fornecidos por terceiros e acoplados aos nossos produtos terão suas próprias garantias (exemplo motor elétrico).
Os produtos com defeitos serão reparados ou trocados, a juízo do fabricante, na fábrica, com frete pago pelo cliente.
O envio de qualquer produto à fábrica deverá ter prévia autorização por escrito do fabricante com número de ordem e deverá estarcom etiqueta de série do fabricante.
Para sua maior segurança, recomendamos anotar abaixo o modelo e número de série do produto em seu certificado de garantia.

MODELO: **SRGC-10-50** SÉRIE: **174407-C**

Obs.: O equipamento não entrará na fábrica sem o número de ordem para análise do problema e sem etiqueta acima mencionada.

Manual de Instalação e Operação



RUDC INDÚSTRIA E COMERCIO LTDA
End.: José Gomes Caetano nº 811, Distrito Industrial Paulo Kinock – Leme/SP
Fone – (0xx19) 3572-1919Fax – (0xx19) 3572-2008
www.rudcbombas.com.br

Instruções Gerais para instalação Hidráulica

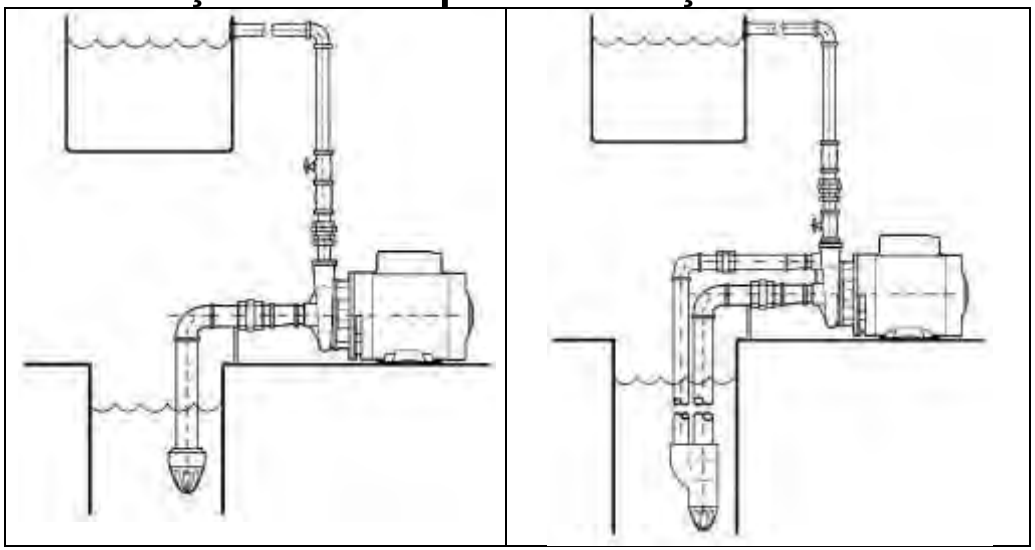

1- Instale a Bomba o mais próximo possível da fonte de captação de água.
2- Não expor a bomba à ação do tempo, protegendo-a do sol, chuva, etc.
3- O local onde a motobomba estiver instalada deve ser de fácil acesso.
4- Utilize o mínimo possível de conexões na instalação.
5- Faça um suporte de madeira ou tijolo para suportar o peso da canalização de sucção.
6- Use sempre a válvula de pé (fundo do poço) com bitola superior a da canalização de sucção e instale a válvula no mínimo 30 cm do fundo do local de sucção.
7- Vede todas as conexões com vedante apropriado, dando uma maior atenção à tubulação de sucção, evitando assim a entrada de ar.
8- Nunca reduza a bitola de sucção e recalque da bomba.
9- Os diâmetros das tubulações devem ser compatíveis com a vazão desejada.
10- Instale válvulas de retenção na tubulação de recalque quando a altura for igual ou maior que 20 m, ou em caso de recalque na horizontal, quando as perdas de carga exceder a 20 mca.

Instruções Gerais para instalação Elétrica

1- Para ligação correta do motor elétrico, observe na placa de identificação do motor o esquema compatível à voltagem da rede elétrica do local.
2- Faça o mesmo esquema de ligação correspondente à voltagem do local e indicações na plaqueta do motor.
3- Recomenda-se que a instalação de motores elétricos de baixa tensão, devem somente ser feitas por pessoas técnicas experientes que conheçam a cumpram as recomendações prescritas na norma brasileira de instalação elétrica de baixa tensão NBR 5410.
4- Em caso de motores trifásicos utilize chave contadora para proteção do mesmo.

Instruções para acionamento da bomba

1- Antes de conectar a tubulação de recalque à bomba, faça a escorva da mesma, preenchendo com água todo o corpo da bomba e a tubulação de sucção.
2- Nunca deixe sua motobomba operando sem água em seu interior.
3- Complete a instalação hidráulica do recalque.
4- Verifique novamente todas as instalações elétricas e hidráulicas antes de acionar a motobomba.
5- Observe logo na partida, pelo lado traseiro do motor, se este gira no sentido correto indicado pela seta no corpo da bomba. Caso contrario, inverta o giro do mesmo através dos fios de ligação do motor elétrico.

RUDC INDÚSTRIA E COMERCIO LTDA.

2910 RPM - LINHA RGC

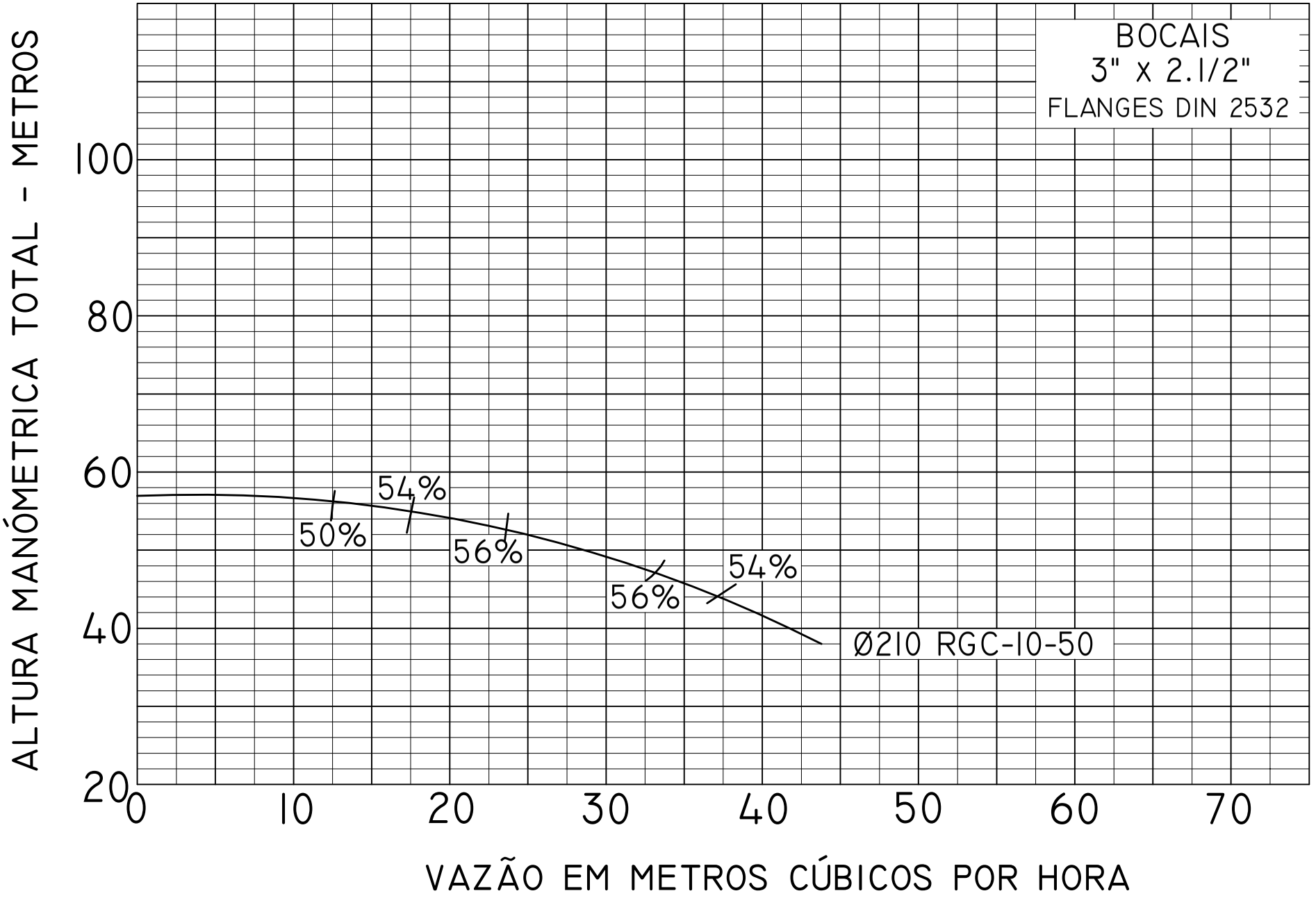

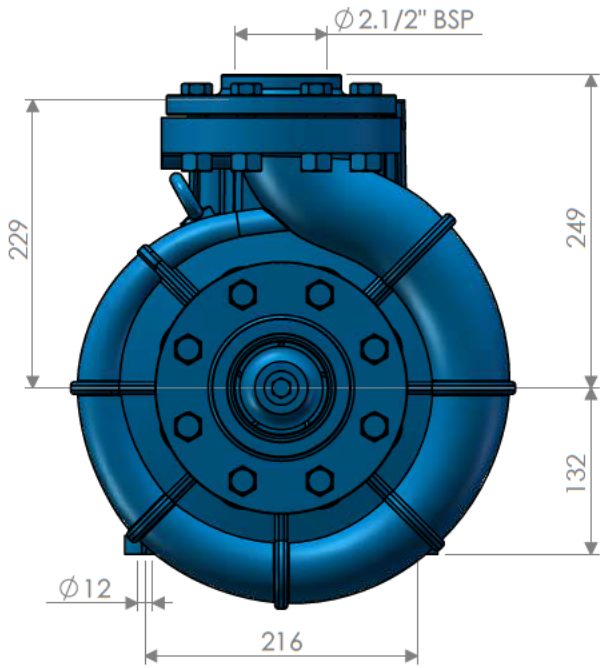

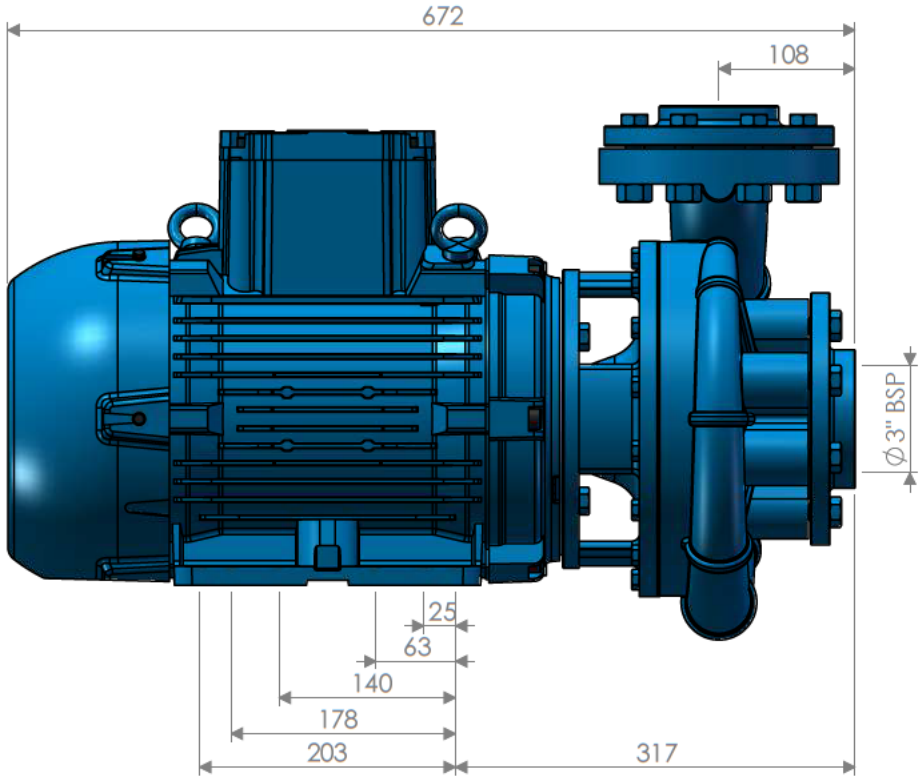

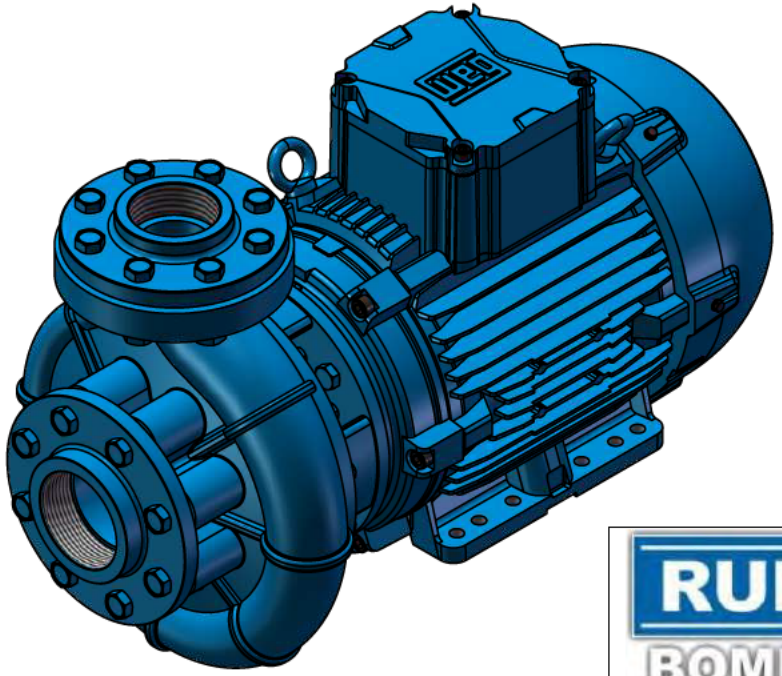

RUDC BOMBAS

CONJUNTO/PEÇA: MTBBA SRGC-10-50 TRIF. IP-55 W22Xdb DIMENSIONAL 132S_M_TOP				MATERIAL: VARIOS	SIMBOLOGIA		
DESENHO Nº: 00000	ELAB.	CLEBER	01/12/20	00	XX/XX/XX	TOLERANCIA	±
ESCALA: 1:6	APROV.	CLEBER	01/12/20	00	XX/XX/XX		
		NOME	DATA	REV.	DATA	VISTO	

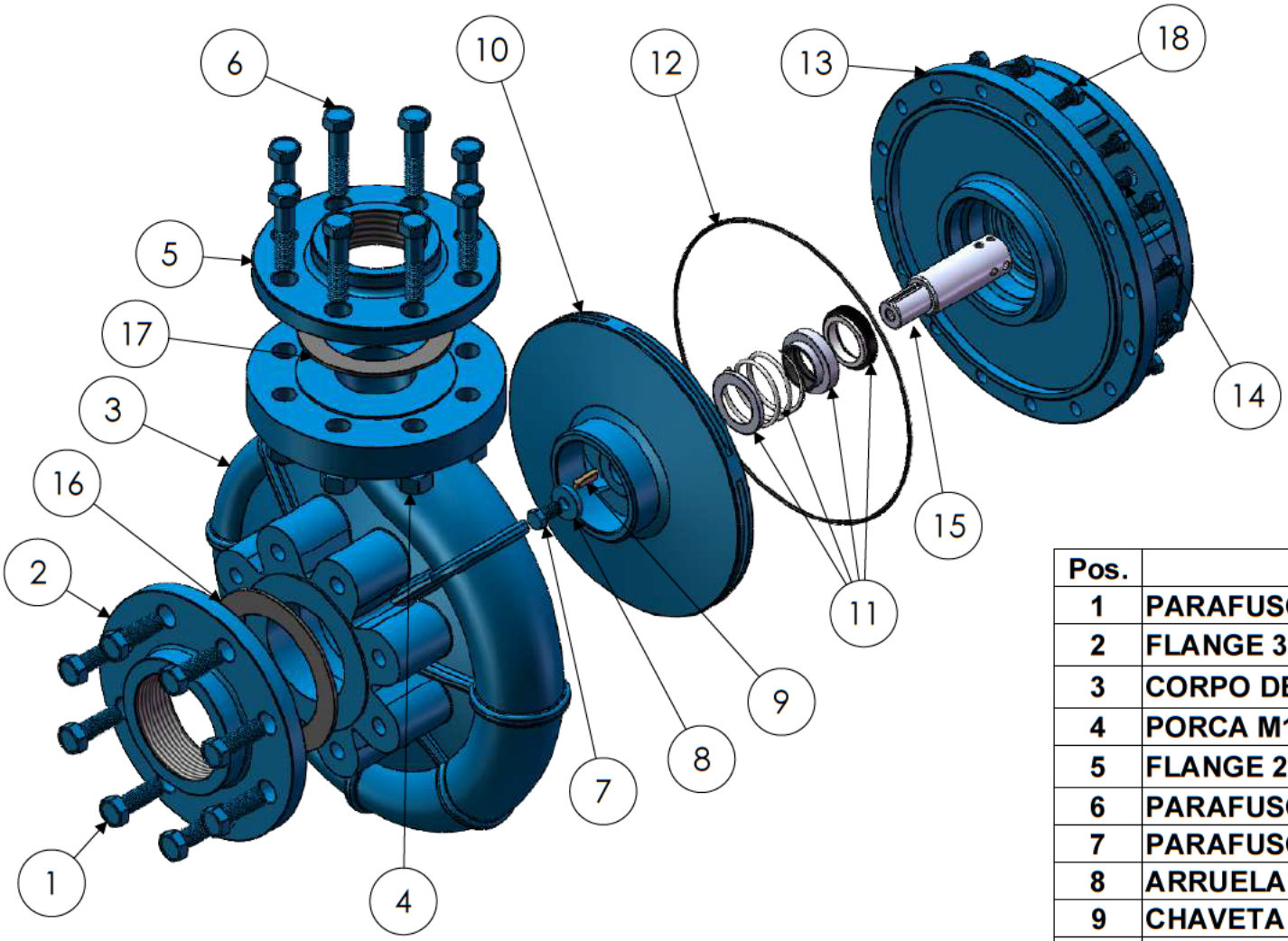

Pos.	Descrição	Material	Quant.
1	PARAFUSO M14 X 40	FERRO	8
2	FLANGE 3" ROSCA BSP	ASTM-A48	1
3	CORPO DE RECALQUE RGC	ASTM-A48	1
4	PORCA M14	FERRO	8
5	FLANGE 2.1/2" ROSCA BSP	ASTM-A48	1
6	PARAFUSO M14 X 60	FERRO	8
7	PARAFUSO 3/8" X 1" UNC	FERRO	1
8	ARRUELA DO ROTOR	AISI316	1
9	CHAVETA 1/4"	AISI316	1
10	ROTOR RGC FURO 1.1/4"	ASTM-A48	1
11	SELO MECÂNICO 1.3/4"	VÍTON	1
12	ANEL O'RING RGC	VÍTON	1
13	INTERMEDIÁRIA FC-184 RGC 1.3/4"	ASTM-A48	1
14	PARAFUSO 1/2" X 1" 13 FIOS UNC	FERRO	4
15	EIXO JM	AISI316	1
16	JUNTA SUCÇÃO	VÍTON	1
17	JUNTA RECALQUE	VÍTON	1
18	PARAFUSO 3/8" X 1" UNC	FERRO	16

RUDC BOMBAS

CONJUNTO/PEÇA
VISTA EXPLODIDA
BOMBA SRGC FC-184 EIXO ADAPT. JM

MATERIAL: VARIOS

SIMBOLOGIA
TOLERANCIA: +/-

DESENHO Nº: 00000

ESCALA: 1:5

		NOME	DATA	REV.	DATA	VISTO
ELAB.	CLEBER		02/12/20	00	XX/XX/XX	
APROV.	CLEBER		02/12/20	00	XX/XX/XX	

THIS IS AN UPDATED REVISION. THE PREVIOUS ONE MUST BE DISREGARDED.

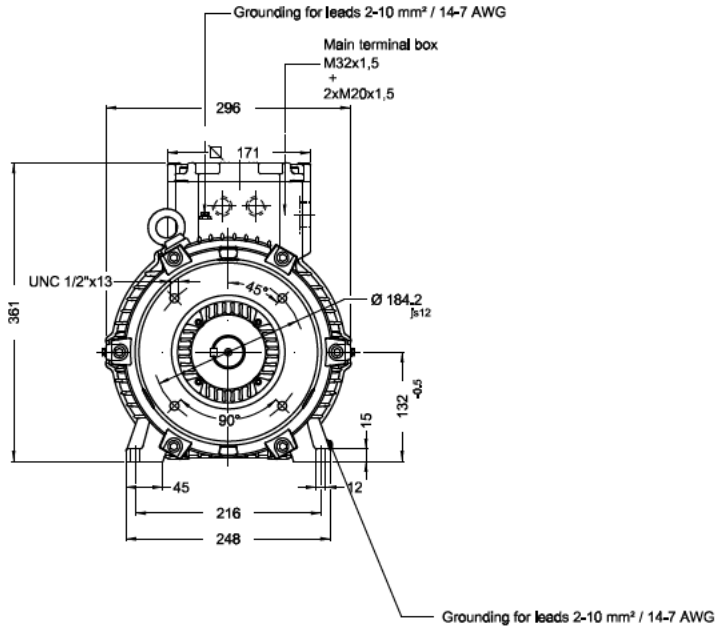

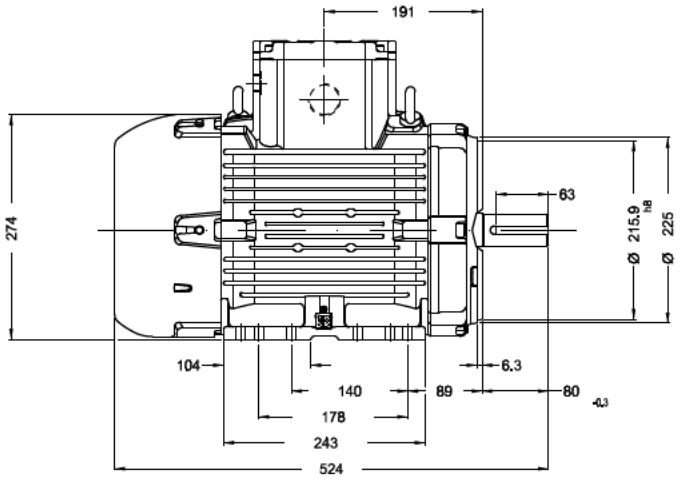

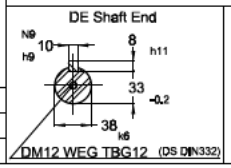

Color RAL 5009
Painting plan 205P
Mounting B34T

7.5 kW 02 Poles 50 Hz | A

RUDC INDUSTRIA E COMERCIO LTDA

ECM	LOC	SUMMARY OF MODIFICATIONS	EXECUTED	CHECKED	RELEASED	DATE	VER

EXECUTED	PRISCILA2	THREE-PHASE W22Xdb MOTOR	PREVIEW
CHECKED		FRAME 132S/M IP56 TEFC	WDD
RELEASED			
REL DT.		WMO Jaraguá do Sul Product Engineering	SHEET 1 / 1

Dimensions in mm

XME A3

WEG's property. Forbidden reproduction without previous authorization.

1 # EC - TYPE EXAMINATION CERTIFICATE

2 **Equipment or Protective System Intended for use in Potentially Explosive Atmospheres Directive 94/9/EC**

3 EC - Type Examination Certificate Number: **Baseefa13ATEX0079X**

4 Equipment or Protective System: **A Range of Induction Motors of Frame Size 90 to 132**

5 Manufacturer: **WEG Equipamentos Eletricos S.A**

6 Address: **Av. Prefeito Waldemar Grubba, 3000. Jaragua do Sul, SC, CEP: 89256-900, Brazil.**

7 This equipment or protective system and any acceptable variation thereto is specified in the schedule to this certificate and the documents therein referred to.

8 Baseefa, Notified Body number 1180, in accordance with Article 9 of the Council Directive 94/9/EC of 23 March 1994, certifies that this equipment or protective system has been found to comply with the Essential Health and Safety Requirements relating to the design and construction of equipment and protective systems intended for use in potentially explosive atmospheres given in Annex II to the Directive.

The examination and test results are recorded in confidential Report No. **GB/BAS/ExTR13.0109/00**

9 Compliance with the Essential Health and Safety Requirements has been assured by compliance with:

EN 60079-0: 2012 **EN 60079-1: 2007** **EN60079-7: 2007** **EN 60079-31: 2009**

except in respect of those requirements listed at item 18 of the Schedule.

10 If the sign "X" is placed after the certificate number, it indicates that the equipment or protective system is subject to special conditions for safe use specified in the schedule to this certificate.

11 This EC - TYPE EXAMINATION CERTIFICATE relates only to the design and construction of the specified equipment or protective system. Further requirements of the Directive apply to the manufacturing process and supply of this equipment or protective system. These are not covered by this certificate.

12 The marking of the equipment or protective system shall include the following :

Ⓔx II 2 GD **Ex d IIC T4 Gb Ta -55°C to + 80°C or Ex de IIC T4 Gb Ta -55°C to + 80°C**
Ex tb IIIC T125°C Db IP66 Ta -55°C to + 80°C see schedule

Baseefa Customer Reference No. **5886**

Project File No. **12/0260**

This document is issued by the Company subject to its General Conditions for Certification Services accessible at http://www.sgs.com/en/Terms-and-Conditions.aspx and the Supplementary Terms and Conditions accessible at http://www.baseefa.com/terms-and-conditions.asp. Attention is drawn to the limitation of liability, indemnification and jurisdiction issues defined therein. Any holder of this document is advised that information contained herein reflects the Company's findings at the time of its intervention only and within the limits of Client's instructions, if any. It does not necessarily indicate that the equipment may be used in particular industries or circumstances. The Company's sole responsibility is to its Client and this document does not exonerate parties to a transaction from exercising all their rights and obligations under the transaction documents. This document cannot be reproduced except in full, schedule included, without prior written approval of the Company. Any unauthorized alteration, forgery or falsification of the content or appearance of this document is unlawful and offenders may be prosecuted to the fullest extent of the law.

SGS Baseefa Limited
Rockhead Business Park, Staden Lane,
Buxton, Derbyshire SK17 9RZ
Telephone +44 (0) 1298 766600 Fax +44 (0) 1298 766601
e-mail info@baseefa.com web site www.baseefa.com
Registered in England No. 4305578.
Registered address: Rossmore Business Park, Ellesmere Port, Cheshire, CH65 3EN

Re-issued 25th October 2013 to replace original

R S SINCLAIR
GENERAL MANAGER
On behalf of SGS Baseefa Limited

13 **Schedule**

14 **Certificate Number Baseefa13ATEX0079X**

15 **Description of Equipment or Protective System**

The range of induction motor of frame size 90 to 132 comprises a stator frame, endshields and main and auxiliary terminal boxes all fabricated from cast iron. The single ended drive shaft has an external cooling fan at the non-drive end. The terminal box cover fasteners are grade 8.8/12.9 steel or grade A2/4-70 or 80 stainless steel.

The frames are provided with a terminal neck for the integral main terminal box. A single auxiliary terminal box may be attached to the side of the main terminal box. The wall between the terminal box and the motor frame is provided with flameproof potted cable bushings for the winding tails and auxiliary cables for thermal sensors etc. The terminal boxes may be designated flameproof Ex d, or increased safety Ex e.

The motors have rolling element bearings, are foot or flanged mounted for horizontal and vertical use and may be provided with anti-condensation heaters rated as indicated below.

The motors are rated from 220V to 1100V when supplied with an Ex d terminal box , or from 220V to 690V when supplied with an Ex e terminal box, 50/60Hz or variable frequency up to a maximum of 120Hz when supplied from a type VPWM, CFW09 or CFW11 invertors manufactured by WEG. The maximum voltage on the auxiliary terminals is 440V.

The motors have a maximum rating as indicated below for use in a maximum ambient temperature of 40°C when continuously rated for S1 duty and connected to a 3 phase supply having form and symmetry not worse than that defined in IEC 60034-1 and operated within the defined voltage and frequency limits for Zone A.

Frame size	90	100	112	132
Maximum output (kW)	3.0	4.0	7.5	11.0
Maximum output (kW) with permanent magnet and VFD	4.5	7.5	11.0	22.0
Poles	2 to 12			
Heater (W)	11	11	22	30

The motors are de-rated in accordance with the manufacturer's instructions for use with variable frequency supplies, a maximum ambient temperature between 40°C and 80°C, altitudes above 1000m, S2 to S9 duty and a service factor of 1.0 to 1.25.

The motors can be provided with various seal arrangements and materials for ingress protection IP55, IP65 and IP66.

Options include permanent magnet, a double ended shaft, integral leads, anti-condensation heaters, thermal protectors, forced ventilation and a breather-drain to IECEx CSA 12.0005U.

Cable entry holes are provided as specified on the certified drawings for the accommodation of flameproof cable entry devices, with or without the interposition of a flameproof thread adapter. Unused entries are to be fitted with suitable certified flameproof stopping plugs.

The cable entry devices, thread adapters and stopping plugs shall be suitable for the equipment, the cable and the conditions of use and shall be certified as Equipment (not a Component) under an EC Type Examination Certificate to Directive 94/9/EC.

When used in an explosive dust atmosphere the cable entry devices shall maintain the ingress protection of the enclosure

The motors may be alternatively marked for gas groups IIA, IIB I, dust groups IIIB, IIIA, temperature classifications of T3, and T2 without an increase in ambient temperature above 80°C, ingress protection IP5X, IP6X, gas only and dust only as indicated below.

⟨Ex⟩I M2 G Ex d I T* Ta -**°C to + **°C Mb

⟨Ex⟩II 2 D Ex tb III* T***°C Ta -**°C to + **°C Db IP**

16 Report Number

GB/BAS/ExTR13.0109/00.

17 Specific Conditions of Use

1 The flamepath gaps are less that those permitted by IEC60079-1 for gas group IIC and shall not be enlarged in service.

2 The motors may be provided with integral leads, which must be suitably protected and terminated within an enclosure suitable for the conditions of use.

3 When provided with a breather-drain to IECEx CSA 12.0005U the motors are excluded from Group I, and are limited to temperature classification T5 to T2 Ta -55°C to + 50°C, or T4 to T2 Ta -55°C to + 80°C, and have an IP rating of IP6X.

4 The maximum surface temperature was determined without a dust layer. The end user shall prevent a dust layer forming on the motors.

5 After de-energising a delay 60 minutes is required before opening.

18 Essential Health and Safety Requirements

All relevant Essential Health and Safety Requirements are covered by the standards listed at item 9.

19 Drawings and Documents

Number	Sheet	Issue	Date	Description
10001635698	1 to 12	0	27.09.13	Technical Description of Motors
10001625663	1	0	27.09.13	B.O.M. Metallic Components – Part 1
10001625663	1	0	27.09.13	B.O.M. Metallic Components – Part 2
10001625663	1	0	27.09.13	B.O.M. Non Metallic Components – Part 1
10001625663	1	0	27.09.13	B.O.M. Non Metallic Components – Part 2
10001638263	1	0	27.09.13	B.O.M Bushing
10001630456	1 & 2	00	27.09.13	Gaps m and k
10001630510	1 to 3	3	27.09.13	Flame Paths and gaps
10001583462	1	00	27.09.13	Flame Paths
10001557362	1	01	16.07.13	Flanges
10000857593	1	01	16.07.13	De-rating values
10001606239	1	01	27.09.13	Fan clearance
10001591378	1	01	16.07.13	Shaft Sealing Arrangements
10001611198	1	01	27.09.13	Terminal Box Details – Ex d
10001611402	1	02	10.10.13	Terminal Box Details – Ex de
10002018453	1	01	27.09.13	Warning Labels
10002018476	1	00	27.09.13	Rating Label Marking
10001611764	1	00	27.09.13	Bushing
10001638329	1 to 5	0	27.09.13	Technical Description of Bushing
10001632610	1	0	27.09.13	Power, Poles, Packing and Air Gap Data

Number	Sheet	Issue	Date	Description
10001612206	1	01	27.09.13	General Dimensions
10001560116	1	01	27.09.13	Permanent Magnet Details
10001605285	1	01	27.09.13	Heater and thermal probe details
10000874503	1	01	16.07.13	De-rating for Temperature and Altitude
10001632982	1	01	27.09.13	Forced Ventilation Details
10000962408	1	05	28.08.13	Seal Details
10001604928	1	01	27.09.13	Grounding Bush
10001613668	1	01	27.09.13	Assembly Components
10001589940	1	00	27.09.13	Drain Details
10000940500	1	01	16.07.13	Connection Nameplates
10000857543	1	01	16.07.13	Mounting Arrangements
10002008091	1 to 10	04	30.09.13	Analysis of Motor Temperature

1 # SUPPLEMENTARY EU - TYPE EXAMINATION CERTIFICATE

2 **Equipment or Protective System Intended for use in Potentially Explosive Atmospheres Directive 2014/34/EU**

3 Supplementary EU - Type Examination Certificate Number: **Baseefa13ATEX0079X/1**

3.1 In accordance with Article 41 of Directive 2014/34/EU, EC-Type Examination Certificates referring to 94/9/EC that were in existence prior to the date of application of 2014/34/EU (20 April 2016) may be referenced as if they were issued in accordance with Directive 2014/34/EU. Supplementary Certificates to such EC-Type Examination Certificates, and new issues of such certificates, may continue to bear the original certificate number issued prior to 20 April 2016

4 Product: **A Range of Induction Motors of Frame Size 90 to 132**

5 Manufacturer: **WEG Equipamentos Eletricos S.A**

6 Address: **Av. Prefeito Waldemar Grubba, 3000. Jaragua do Sul, SC, CEP: 89256-900, Brazil**

7 This supplementary certificate extends EC – Type Examination Certificate No. **Baseefa13ATEX0079X** to apply to products designed and constructed in accordance with the specification set out in the Schedule of the said certificate but having any variations specified in the Schedule attached to this certificate and the documents therein referred to.

8 SGS Baseefa, Notified Body number 1180, in accordance with Article 17 of Directive 2014/34/EU of the European Parliament and of the Council, dated 26 February 2014, certifies that the product, as modified by this supplementary certificate, has been found to comply with the Essential Health and Safety Requirements relating to the design and construction of products intended for use in potentially explosive atmospheres given in Annex II to the Directive.

SGS Baseefa Customer Reference No. **5886** Project File No. **17/0375**

This document is issued by the Company subject to its General Conditions for Certification Services accessible at http://www.sgs.com/en/Terms-and-Conditions.aspx and the Supplementary Terms and Conditions accessible at http://www.sgs.com/SGSBaseefa/Terms-and-Conditions.aspx. Attention is drawn to the limitation of liability, indemnification and jurisdiction issues defined therein. Any holder of this document is advised that information contained herein reflects the Company's findings at the time of its intervention only and within the limits of Client's instructions, if any. It does not necessarily indicate that the equipment may be used in particular industries or circumstances. The Company's sole responsibility is to its Client and this document does not exonerate parties to a transaction from exercising all their rights and obligations under the transaction documents. This document cannot be reproduced except in full, schedule included, without prior written approval of the Company. Any unauthorized alteration, forgery or falsification of the content or appearance of this document is unlawful and offenders may be prosecuted to the fullest extent of the law.

SGS Baseefa Limited
Rockhead Business Park, Staden Lane,
Buxton, Derbyshire SK17 9RZ
Telephone +44 (0) 1298 766600 Fax +44 (0) 1298 766601
e-mail baseefa@sgs.com web site www.sgs.co.uk/baseefa
Registered in England No. 4305578.
Registered address: Rossmore Business Park, Ellesmere Port, Cheshire, CH65 3EN

R S SINCLAIR PP DBREARLEY
TECHNICAL MANAGER
On behalf of SGS Baseefa Limited

13 **Schedule**

14 **Certificate Number Baseefa13ATEX0079X/1**

15 Description of the variation to the Product

Variation 1.1

To allow the introduction of new conductor specification for the main and auxiliary cables, size 20AWG to 10AWG together with correcting the type 51 cable bushing conductor size parameters

16 Report Number

SGS Baseefa Report Number: GB/BAS/ExTR17.0189/00

17 Specific Conditions of Use

None additional to those listed previously

18 Essential Health and Safety Requirements

Compliance with the Essential Health and Safety Requirements is not affected by this variation.

19 Drawings and Documents

Number	Sheet	Issue	Date	Description
10001638329	1 of 5	1	04/07/2017	Technical Description of W22X Bushings Frame sizes 90 to 132

This drawing is common to this certificate and is held with IECEx BAS 13.0045X.

1 # SUPPLEMENTARY EU - TYPE EXAMINATION CERTIFICATE

2 **Equipment or Protective System Intended for use in Potentially Explosive Atmospheres Directive 2014/34/EU**

3 Supplementary EU - Type Examination Certificate Number: **Baseefa13ATEX0079X/2**

3.1 In accordance with Article 41 of Directive 2014/34/EU, EC-Type Examination Certificates referring to 94/9/EC that were in existence prior to the date of application of 2014/34/EU (20 April 2016) may be referenced as if they were issued in accordance with Directive 2014/34/EU. Supplementary Certificates to such EC-Type Examination Certificates, and new issues of such certificates, may continue to bear the original certificate number issued prior to 20 April 2016.

4 Product: **A Range of Induction Motors of Frame Size 90 to 132**

5 Manufacturer: **WEG Equipamentos Eletricos S.A**

6 Address: **Av. Prefeito Waldemar Grubba, 3000. Jaragua do Sul, SC, CEP: 89256-900, Brazil**

7 This supplementary certificate extends EC – Type Examination Certificate No. Baseefa13ATEX0079X to apply to products designed and constructed in accordance with the specification set out in the Schedule of the said certificate but having any variations specified in the Schedule attached to this certificate and the documents therein referred to.

8 SGS Baseefa, Notified Body number 1180, in accordance with Article 17 of Directive 2014/34/EU of the European Parliament and of the Council, dated 26 February 2014, certifies that the product, as modified by this supplementary certificate, has been found to comply with the Essential Health and Safety Requirements relating to the design and construction of products intended for use in potentially explosive atmospheres given in Annex II to the Directive.

9 Item 9 of the original Certificate is replaced by "Compliance with the Essential Health and Safety Requirements has been assured by compliance with:

EN IEC 60079-0: 2018 **EN 60079-1: 2014** **EN 60079-7: 2015** **EN 60079-31: 2014**

except in respect of those requirements listed at item 18 of the Schedule."

12 The marking of the equipment has changed from the original Certificate and shall include the following:

Ⓔx II 2 G Ex db IIC T4 Gb or Ex db eb IIC T4 Gb
Ⓔx II 2 D Ex tb IIIC T125°C Db IP (see original schedule)
Tamb -55°C to +80°C

SGS Baseefa Customer Reference No. **5886** Project File No. **18/0404**

This document is issued by the Company subject to its General Conditions for Certification Services accessible at http://www.sgs.com/en/Terms-and-Conditions.aspx and the Supplementary Terms and Conditions accessible at http://www.sgs.com/SGSBaseefa/Terms-and-Conditions.aspx. Attention is drawn to the limitation of liability, indemnification and jurisdiction issues defined therein. Any holder of this document is advised that information contained herein reflects the Company's findings at the time of its intervention only and within the limits of Client's instructions, if any. It does not necessarily indicate that the equipment may be used in particular industries or circumstances. The Company's sole responsibility is to its Client and this document does not exonerate parties to a transaction from exercising all their rights and obligations under the transaction documents. This document cannot be reproduced except in full, schedule included, without prior written approval of the Company. Any unauthorized alteration, forgery or falsification of the content or appearance of this document is unlawful and offenders may be prosecuted to the fullest extent of the law.

SGS Baseefa Limited
Rockhead Business Park, Staden Lane,
Buxton, Derbyshire SK17 9RZ
Telephone +44 (0) 1298 766600 Fax +44 (0) 1298 766601
e-mail baseefa@sgs.com web site www.sgs.co.uk/sgsbaseefa
Registered in England No. 4305578.
Registered address: Rossmore Business Park, Ellesmere Port, Cheshire, CH65 3EN

D BREARLEY
Certification Manager

R S SINCLAIR
TECHNICAL MANAGER
On behalf of SGS Baseefa Limited

13 **Schedule**

14 **Certificate Number Baseefa13ATEX0079X/2**

15 Description of the variation to the Product

Variation 1.1

The manufacturer requests a variation to confirm that the equipment has been reviewed against the requirements of EN IEC 60079-0: 2018, EN 60079-1: 2014, EN 60079-7: 2015 and EN 60079-31: 2014.

16 Report Number

GB/BAS/ExTR18.0315/00

17 Specific Conditions of Use

In addition to those listed previously

1. Cable glands shall be suitably ATEX certified as equipment.

18 Essential Health and Safety Requirements

Compliance with the Essential Health and Safety Requirements is affected as follows.

Clause	Subject	Compliance
1.2.7	LVD type requirements	Standards require manufacturer's declaration, supplied.
1.2.8	Overloading of equipment (protection relays, etc.)	Covered by installation rules and manufacturer's instructions. Electrical ratings have been included on the instructions provided.
1.4.1	External effects	The Purchaser should make the manufacturer aware of such issues. Covered in Instructions
1.4.2	Aggressive substances, etc.	The Purchaser should make the manufacturer aware of such issues. Covered in Instructions

19 Drawings and Documents

Number	Sheet	Issue	Date	Description
10002018476	1 of 1	01	11.07.2018	Nameplate Frame Size 90 to 132
10002018453	1 of 1	02	11.07.2018	Warning Labels Frame Size 90-132
*10001589940	1 of 1	01	11.07.2018	Drain Dimensions
10001625663	1 to 4	01	09.07.2018	BOM Motor Metallic Components
10001635698	1 to 12	01	09.07.2018	Technical Description of W22X Explosion Proof Motors Line (Ex db/de/tb)
10001638329	1 to 5	02	09.07.2018	Technical Descriptive of W22X Bushings

These drawings are common to Baseefa13ATEX0079X and held with IECEX BAS 13.0045X.

*This drawing is common to Baseefa13ATEX0079X, IECEx BAS 13.0045X, Baseefa13ATEX0288X and IECEx BAS 13.0142X, and is held with IECEx BAS 13.0045X

1 # SUPPLEMENTARY EU - TYPE EXAMINATION CERTIFICATE

2 **Equipment or Protective System Intended for use in Potentially Explosive Atmospheres Directive 2014/34/EU**

3 Supplementary EU - Type Examination Certificate Number: **Baseefa13ATEX0079X/3**

3.1 In accordance with Article 41 of Directive 2014/34/EU, EC-Type Examination Certificates referring to 94/9/EC that were in existence prior to the date of application of 2014/34/EU (20 April 2016) may be referenced as if they were issued in accordance with Directive 2014/34/EU. Supplementary Certificates to such EC-Type Examination Certificates, and new issues of such certificates, may continue to bear the original certificate number issued prior to 20 April 2016

4 Product: **A Range of Induction Motors of Frame Size 90 and 132**

5 Manufacturer: **WEG Equipamentos Eletricos S.A**

6 Address: **Av. Prefeito Waldemar Grubba, 3000. Jaragua do Sul, SC, CEP: 89256-900, Brazil**

7 This supplementary certificate extends EC – Type Examination Certificate No. Baseefa13ATEX0079X to apply to products designed and constructed in accordance with the specification set out in the Schedule of the said certificate but having any variations specified in the Schedule attached to this certificate and the documents therein referred to.

8 SGS Fimko Oy, Notified Body number 0598, in accordance with Article 17 of Directive 2014/34/EU of the European Parliament and of the Council, dated 26 February 2014, certifies that the product, as modified by this supplementary certificate, has been found to comply with the Essential Health and Safety Requirements relating to the design and construction of products intended for use in potentially explosive atmospheres given in Annex II to the Directive.

8.1 The original certificate was issued by SGS Baseefa Ltd (UK Notified Body 1180). It, and any supplements previously issued by SGS Baseefa Ltd have been transferred to the supervision of SGS Fimko Oy (EU Notified Body 0598). The original certificate number is retained.

SGS Fimko Oy Customer Reference No. **5886**

Project File No. **19/0460**

This document is issued by the Company subject to their General Conditions for Certification Services accessible at http://www.sgs.com/en/Terms-and-Conditions.aspx. Attention is drawn to the limitation of liability, indemnification and jurisdiction issues defined therein. Any holder of this document is advised that information contained herein reflects the Company's findings at the time of their intervention only and within the limits of Client's instructions, if any. It does not necessarily indicate that the equipment may be used in particular industries or circumstances. The Company's sole responsibility is to its Client and this document does not exonerate parties to a transaction from exercising all their rights and obligations under the transaction documents. This document cannot be reproduced except in full, schedule included, without prior written approval of the Company. Any unauthorized alteration, forgery or falsification of the content or appearance of this document is unlawful and offenders may be prosecuted to the fullest extent of the law.

SGS Fimko Oy
Särkiniementie 3
P.O. Box 30 FI-00211 Helsinki Finland
Telephone +358 (0)9 696 361 Fax. +358 (0)9 692 5474
e-mail sgs.fimko@sgs.com
web site www.sgs.fi
Business ID 0978538-5

R S SINCLAIR
Authorised Signatory for SGS Fimko Oy

13 **Schedule**

14 **Certificate Number Baseefa13ATEX0079X/3**

15 Description of the variation to the Product

Variation 3.1

To allow minor updates for wall thicknesses, flange information, product design, voltage range, number of poles, grounding connections and section, and terminal box options.

Variation 3.2

To allow the introduction of optional grease, grounding plug, terminal blocks and temperature sensors.

Variation 3.3

To update information regarding the VFD.

Variation 3.4

Update to the notified body number i.e 1180 to 0598.

Variation 3.5

Update certificate details to include, mining, NEMA option and optional conditions.

Variation 3.6

To allow the introduction of a new terminal blocks to be used within the terminal box.

16 Report Number

GB/BAS/ExTR19.0297/00

17 Specific Conditions of Use

Additional to those listed previously

1. When fitted with the separated terminal box a suitably ATEX Ex equipment certified cable entry device may be provided by the manufacturer and installed with cable in compliance with EN 60079-14.

18 Essential Health and Safety Requirements

Compliance with the Essential Health and Safety Requirements is not affected by this variation.

19 Drawings and Documents

Number	Sheet	Issue	Date	Description
10001635698	1 to 13	02	18.10.2019	Technical Descriptive of W22X Explosion Proof Motors Line (Ex db/db eb/tb)
10001632610	1 of 1	3	20/08/2019	Exd Electrical Project
*10001557362	1 of 1	02	27.09.2019	Flange Dimensions
*10000857593	1 of 1	02	05.12.2019	Derating Induction Motor
10001625663	1 to 6 inclusive	02	11/06/2019	BOM-C1b
10002018476	1 of 1	3	27.09.2019	Nameplate
10002018453	1 of 1	4	27.09.2019	Warning Label
**10006682317	1 of 1	00	12.11.2019	Terminal Block Dimension
10001612206	1 of 1	02	27.09.2019	General Information
**10006696115	1 of 1	00	18.10.2019	Separated Terminal Box
*10002008091	1 to 10 inclusive	5	29.09.2019	Examples of Analysis of The Motor Temperature x Maximum External Temperature
***10000940500	1 of 1	03	12.11.2019	Ex db W22X Additional Nameplates and sticks

*These drawings are common to IECEx BAS 13.0008X, Baseefa13ATEX0016X and IECEx BAS 13.0045X, and are held with IECEx BAS 13.0008X.

**This drawing is common to IECEx BAS 13.0045X, Baseefa13ATEX0288X and is held with IECEx BAS 13.0142X.

***This drawing is common to IECEx BAS 13.0045X, IECEx BAS 13.0142X, Baseefa13ATEX0288X, Baseefa13ATEX0016X, and is held with IECEx BAS 13.0008X.

These drawing are common to and held with IECEx BAS 13.0045X.

Meccanotecnica
Umbra / Brasil
a Story of Excellence

CERTIFICADO DE QUALIDADE E CONFORMIDADE/ QUALITY CERTIFICATE

DATA/ *DATE*	**CÓDIGO PRODUTO MTU/** *MTU PRODUCT CODE*	**QUANTIDADE /** *QUANTITY*
10/09/2019	*97643*	*200 pcs*

☐ **AMOSTRA/***SAMPLING*	☒ **PRODUÇÃO SÉRIE/***PRODUCTION* **Lote/Batch nº PR0205716**

MECANOTÉCNICA DO BRASIL declara que o produto indicado acima:

- *foi controlado respeitando-se o plano de amostragem aplicável (segundo os procedimentos internos MTU);*
- *apresenta-se conforme às nossas especificações;*

Os registros dos controles sistemáticos, que asseguram a conformidade do produto às especificações, são conservados nos arquivos da Mecanotécnica pelo período de cinco anos e serão disponibilizados para consulta aos Clientes que solicitarem formalmente.

MECANOTÉCNICA DO BRASIL states that subject product:

- *has been controlled in accordance with applicable sampling plan (following our internal Procedure);*
- *is in compliance with our specifications;*

Systematic control records that assure product conformity according to specification will be archived in MTU for five years and are available to be checked by Customers if they ask for them.

Inspetor CQ/*ICQ Inspector*

NOME/*NAME*	**ASS./***SIGNATURE*
ALESSANDRA MORAIS	Alessandra morais

Mecanotécnica do Brasil Indústria e Comércio Ltda
Rua João Maria Góes 399 – São José dos Pinhais/PR – CEP 83060-206
Tel. +55 (41) 3381 2600 – Fax +55 (41) 3381 2621
Grupo Meccanotecnica Umbra SpA - Italy
www.mecanotecnica.com.br

DCA125SSIU4F

Generator

WhisperWatt™

Prime Rating — 100kW (125kVA)

Standby Rating — 110kW (137.5kVA)

3-Phase, 60 Hertz, 0.8 PF

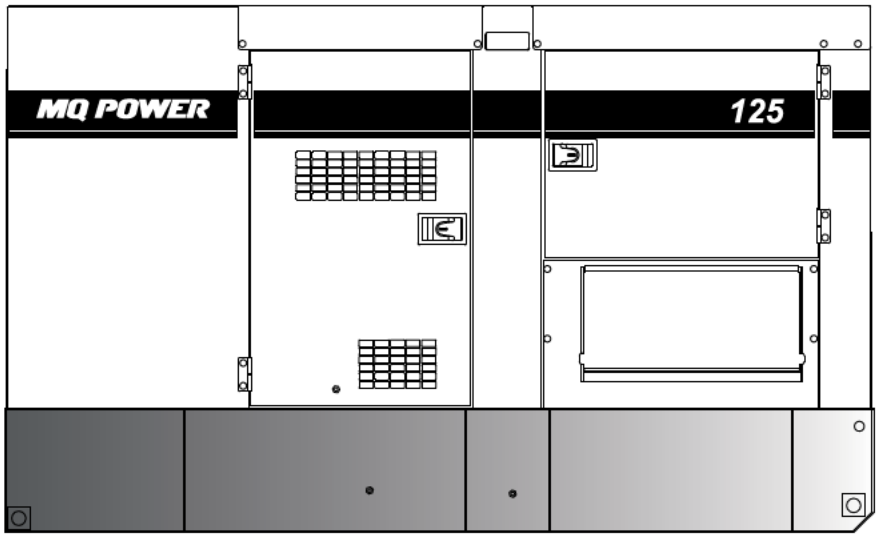

STANDARD FEATURES

- Heavy duty, 4-cycle, direct injection, heated crankcase vent, turbocharged, charge air cooled, 1000W block heater, diesel engine provides maximum reliability.
- EPA emissions certified - Tier 4 Final emissions compliant.
- Microprocessor engine control system maintains frequency to ±0.25%.
- Full load acceptance of standby nameplate rating in a single step.
- Fuel/water separator removes condensation from fuel for extended engine life. Panel mounted alarm light included.
- Sound attenuated, weather resistant, steel housing provides operation at 66 dB(A) at 23 feet. Fully lockable enclosure allows safe unattended operation.
- E-coat and powder coat paint provides durability and weather protection.
- Internal fuel tank with direct reading fuel gauge.
- Spill Containment - Bunded design protects environment by capturing up to 128% of engine fluids.
- Brushless alternator reduces service and maintenance requirements and meets temperature rise standards for Class F insulation systems.
  - Open delta alternator design provides virtually unlimited excitation for maximum motor starting capability.
  - Automatic voltage regulator (AVR) provides precise regulation.
- Fully covered power panel. Three-phase terminals and single phase receptacles allow fast and convenient hookup for most applications including temporary power boxes, tools and lighting equipment. All are NEMA standard.
- ECU845 microprocessor-based digital generator controller.
  - Remote 2-wire start/stop control.
  - High visibility LCD display with heated screen and alphanumeric readout.
  - Operational temperature range of -40° to 85° C.
  - AC monitoring along with fuel and DEF level indicators.
- Digital engine gauges including oil pressure, water temperature, battery volts, engine speed, engine load, fuel level and DEF level.
- Analog generator instrumentation including AC ammeter, AC voltmeter, frequency meter, ammeter phase selector switch, voltmeter phase selector switch, and voltage regulator adjustment potentiometer.
- Automatic safety shutdown system monitors the water temperature, engine oil pressure, low DEF, overspeed and overcrank. Warning lights indicate abnormal conditions.
- Voltage selector switch offers the operator a wide range of voltages that are manually selectable. Fine tuning of the output voltage can be accomplished by adjusting the voltage regulator control knob to obtain the desired voltage.
- Emergency Stop Switch — when manually activated, shuts down generator in the event of an emergency.

DCA125SSIU4F

Generator

SPECIFICATIONS

Generator Specifications		
Design	Revolving field, self-ventilated Drip-proof, single bearing	
Armature Connection	Star with Neutral	Zig Zag
Phase	3	Single
Standby Output	110KW (137.5 KVA)	79 KW
Prime Output	100 KW (125 KVA)	72 KW
3Ø Voltage (L-L/L-N) Voltage Selector Switch at 3Ø 240/139	208Y/120, 220Y/127, 240Y/139	N/A
3Ø Voltage (L-L/L-N) Voltage Selector Switch at 3Ø 480/277	416Y/240, 440Y/254, 480Y/277	N/A
1Ø Voltage (L-L/L-N) Voltage Selector Switch at 1Ø 240/120	N/A	240/120
Power Factor	0.8	1.0
Voltage Regulation (No load to full load)	±0.5%	
Generator RPM	1800	
Frequency	60 Hz	
Winding Pitch	2/3	
No. of Poles	4	
Excitation	Brushless with AVR	
Frequency Regulation: No Load to Full Load	Isochronous under varying loads from no load to 100% rated load	
Frequency Regulation: Steady State	±0.25% of mean value for constant loads from no load to full load.	
Insulation	Class F	
Sound Level dB(A) Full load at 23 feet	66	

Engine Specifications	
Make / Model	Isuzu / BR-4HK1X
Emissions	EPA Tier 4 Final Certified
Starting System	Electric
Design	4-cycle, water cooled, direct injection, turbocharged. Charged Air Cooled EGR, DOC and SCR.
Displacement	317 in³ (5193 cc)
No. cylinders	4
Bore x Stroke	4.52 x 4.92 in. (115 x 125 mm)
Gross Engine Power Output	170.8 hp (127.4 kW)
BMEP	211 psi (1458 kPa)
Piston Speed	1476 ft/min (7.5 m/s)
Compression Ratio	16.5:1
Engine Speed	1800 rpm
Overspeed Limit	2070 rpm
Oil Capacity	6.05 gallons (22.9 liters)
Battery	12V 150Ah x 1

Fuel System		
Recommended Fuel	ASTM-D975-No.1 & No.2-D*	
Maximum Fuel Flow (per hour)	19 gallons (71.9 liters)	
Maximum Inlet Restriction (Hg)	2.9 in (73.6 mm)	
Fuel Tank Capacity	169 gallons (640 liters)	
Fuel Consumption	**gph**	**lph**
At full load	7.1	26.9
At 3/4 load	5.6	21.2
At 1/2 load	4.1	15.5
At 1/4 load	2.6	10.0
DEF Tank Capacity	7.4 gallons (28 liters)	

* - Use ultra-low sulfur diesel fuel.

Cooling System	
Fan Load	6.57 hp (4.9 kW)
Coolant Capacity (with radiator)	10.3 gallons (39 liters)
Coolant Flow Rate (per minute)	60.8 gallons (230 liters)
Heat Rejection to Coolant (per minute)	4456 Btu (4.7 MJ)
Maximum Coolant Friction Head	1.1 psi (7.7 kPa)
Maximum Coolant Static Head	3.3 feet (1 meter)
Ambient Temperature Rating	104°F (40°C)

Air	
Combustion Air	244 cfm (6.9 m³/min)
Maximum Air Cleaner Restriction	25 in. H_2O (6.25 kPa)
Alternator Cooling Air	1352 cfm (38.3 m³/min)
Radiator Cooling Air	6005 cfm (170 m³/min)

Exhaust System	
Gas Flow (full load)	512 cfm (14.5 m³/min)
Gas Temperature	658°F (348°C)
Maximum Back Pressure	100 in. H_2O (25 kPa)

Amperage	
Rated Voltage	**Maximum Amps**
1Ø 120 Volt	300A x 2 (Zigzag)
1Ø 240 Volt	300 A (Zigzag)
3Ø 208 Volt	300 Amps
3Ø 240 Volt	300 Amps
3Ø 480 Volt	150 Amps
Main Line Circuit Breaker Rating	300 Amps
Over Current Relay Trip Set Point 480V Mode Only	152 Amps

WARRANTY*

Isuzu Engine**

12 months from date of purchase with unlimited hours or 36 months from date of purchase with 3000 hours (whichever occurs first).

Generator

24 months from date of purchase or 2000 hours (whichever occurs first).

Trailer

12 months excluding normal wear items.

*Refer to the express written, one-year limited warranty sheet for additional information.
**Refer to Isuzu Diesel Engine Limited Warranty for details.

NOTICE

Specifications sheet is subject to change and is not intended for use in installation design.

DCA125SSIU4F

Generator

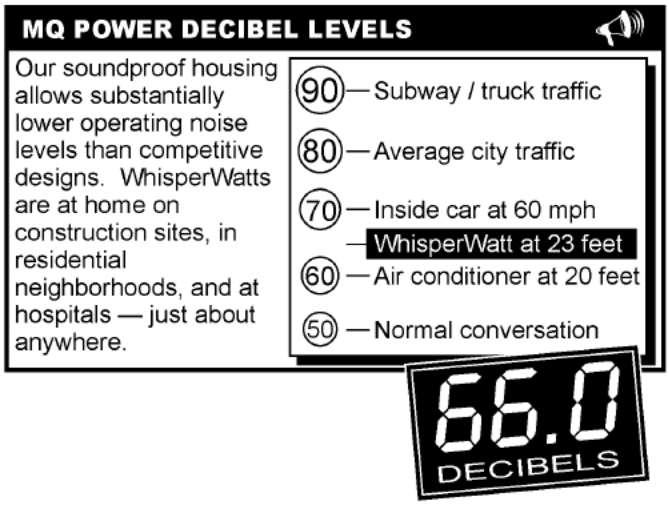

GENERATOR OUTPUT PANEL

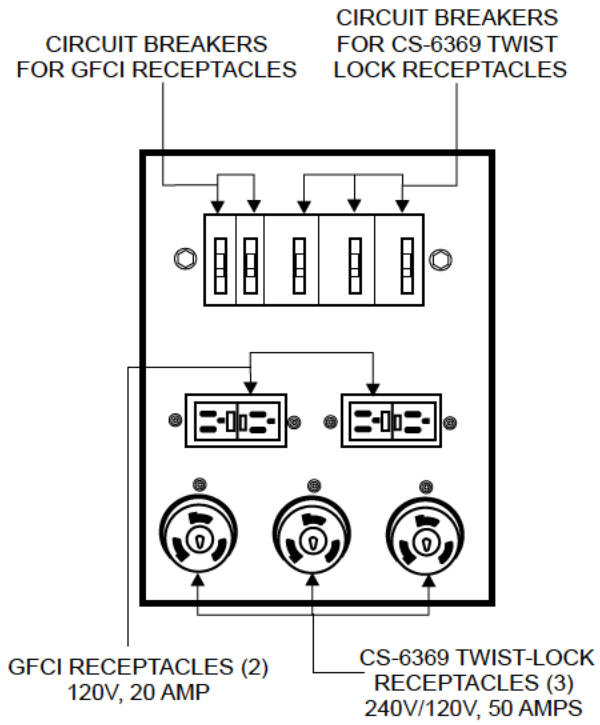

OPTIONAL GENERATOR FEATURES

- **Parallel Controls** — provides the ability to connect multiple generators together into a single power generation system.
- **PowerBalance™** — designed to assist generators when operating under low temperature and/or low load conditions to insure peak performance.
- **Battery Charger** — provides fully automatic and self-adjusting charging to the generator's battery system.
- **Trailer Mounted Package** — meets National Highway Traffic Safety Administration (NHTSA) regulations. Trailer is equipped with electronic or surge brakes with double axle configuration.

OPTIONAL CONTROL FEATURES

- **Audible Alarm** — alerts operator of abnormal conditions.

OPTIONAL FUEL CELL FEATURES

- **Sub-base Fuel Cells (double wall)** — additional fuel cell for extended runtime operation. Contains a leak sensor, low fuel level switch, and a secondary containment tank. UL142 listed.
- 12 hours of minimum run time.
- 24 hours of minimum run time.

OPTIONAL OUTPUT CONNECTIONS

- **Cam-Lok Connectors** — provides quick disconnect alternative to bolt-on connectors.
- **Pin and Sleeve Connectors** — provides industry standard connectors for all voltage requirements.
- **Output Cable** — available in any custom length and size configuration.

DCA125SSIU4F

Generator

SKID-MOUNT DIMENSIONS

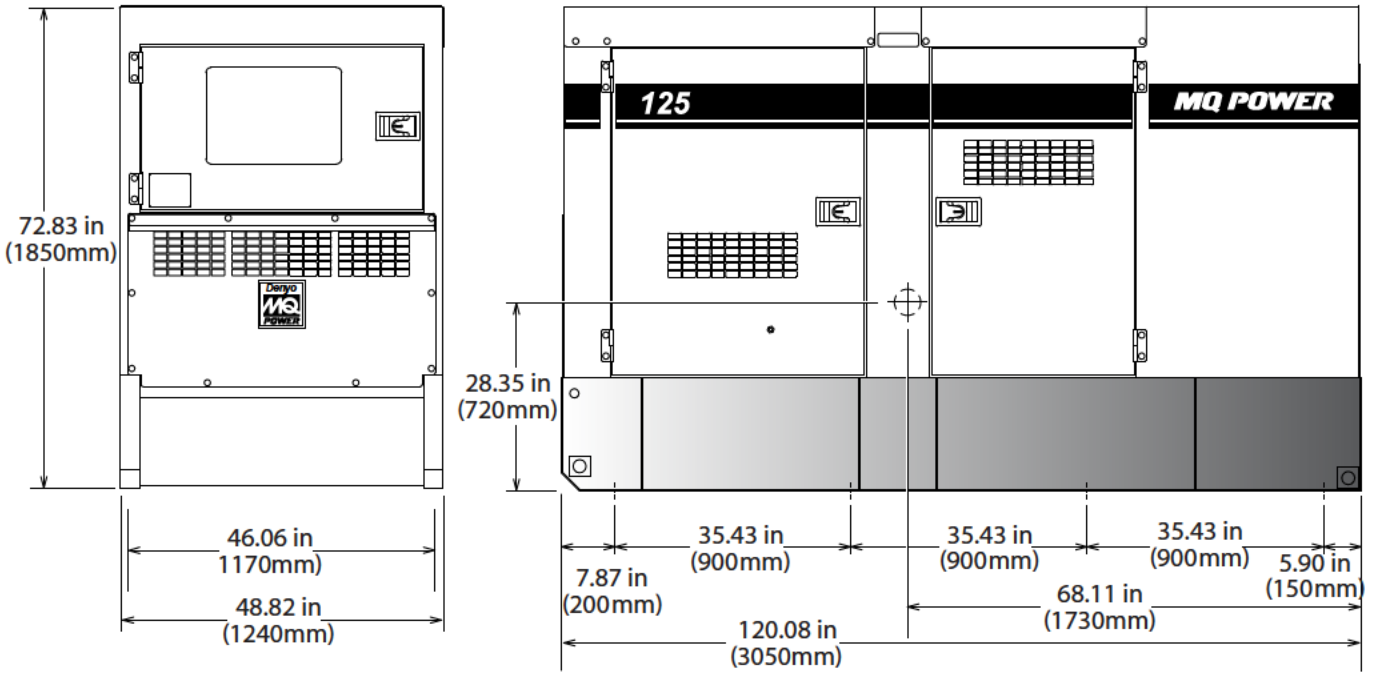

TRAILER-MOUNT DIMENSIONS

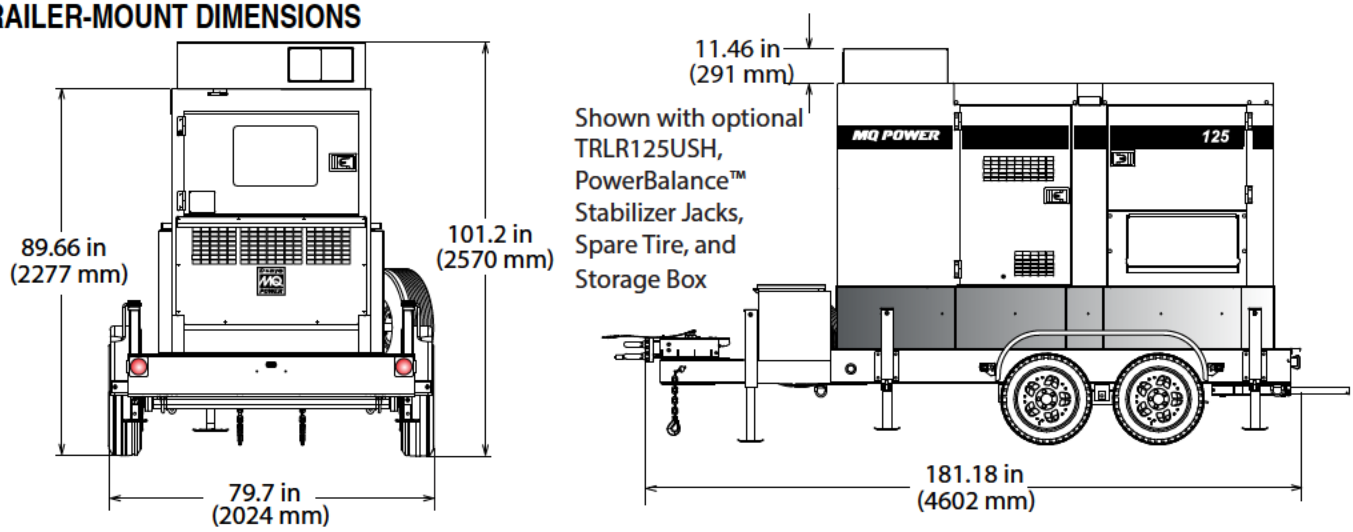

DCA125SSIU4F Weights*	
Dry Weight	5,291 lbs. (2,400 kg)
Wet Weight	6,702 lbs. (3,040 kg)
Max. Lifting Point Capacity	14,050 lb. (6,370 kg)

DCA125SSIU4F and TRLR125US Weights*	
Dry Weight (with TRLR125US)	7,013 lbs. (3,181 kg)
Wet Weight (with TRLR125US)	8,424 lbs. (3,821 kg)

* Weights do not include options.

Generator can be placed on MQ Trailer Models TRLR125US and TRLR180XF.

NOTICE

Features and Specifications are subject to change without notice.

© COPYRIGHT 2022 MULTIQUIP INC.
DCA125SSIU4F Rev. #8 (06/01/22)

MULTIQUIP
6141 Katella Avenue Suite 200
Cypress, CA 90630
310-537-3700
E-MAIL: mq@multiquip.com
WEBSITE: www.multiquip.com

Appendix C – Additional Documentation

1. Groundwater Pump or Slurper Tube Timer Setting Procedure

How to Adjust & Set Ground Water Pump and Slurper Timing using EATON easy 800 PLC



Note: If you get lost in the programing, press 'ESC' until you see the screen above. This is the easy 800 home screen.

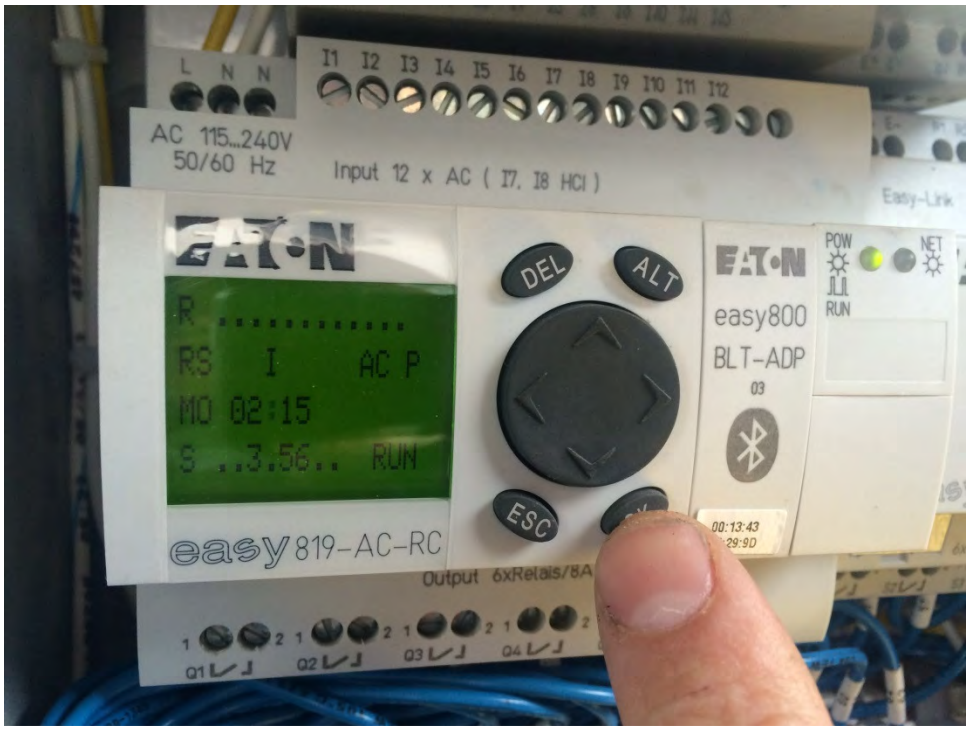

Step 1 Press "OK" Button



Step 2 Scroll down to "PARAMETERS"



Step 3 Once you have parameters highlighted press "OK"



Step 4 Scroll to the desired timer. The individual timing channels where on/off for slurpers and ground water pumps can be set are channels T15 (upside down pi) to T26 (upside down pi). Ignore the T01X to T12X and C01 to C12 channels.

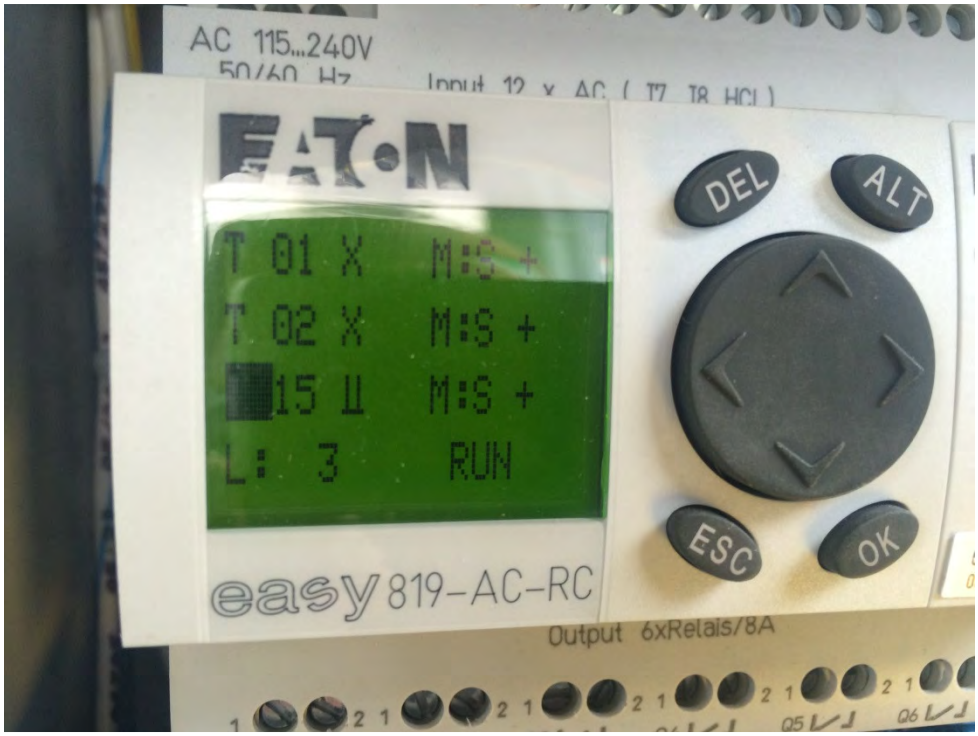

Step 5 Once you have the cursor highlighted on the desired channel press OK



Step 6 Set the ON/OFF times. I1 is OFF time. I2 is ON time.

Attachment B
Health & Safety Plan

PREPARED FOR:

AECOM

Health and Safety Plan

Roxana Public Works Yard
Roxana, Illinois

PREPARED BY:



Health and Safety Plan
Revision C1
Roxana Public Works Yard
Roxana, Illinois

McMillan-McGee Corp.
4895 - 35B Street SE
Calgary, Alberta T2B 3M9 Canada
Ph: 403-279-7948
Fx: 403-272 -7201
Web: www.mcmillan-mcgee.com

Points of Contact:

Clayton Campbell, P.Eng.
Ph: 403.569.5104
Email: ccampbell@mcmillan-mcgee.com

David Rountree, B.S., M.S., P.E., P.Eng.
Ph: 403.569.5116
Email: drountree@mcmillan-mcgee.com

Brent Winder, BA, B.S.Sc.,
MBA Ph: 403.569.5103
Email: brent.winder@mcmillan-mcgee.com

Confidentiality Notice

This confidential document and any related presentation was prepared by McMillan-McGee Corp. for the exclusive use of the intended party and is not to be reproduced, distributed or made available, in whole or in part, to any person, company, or organization without the express written permission of McMillan-McGee Corp.

MCMILLAN-MCGEE CORP

CREATORS OF ET-DSP™

PREPARED FOR:

AECOM

October 28th, 2022

Prepared by:

Janine Schmitke

Table of Contents

List of Tables v
List of Figures v
Nomenclature vi

1. Emergency Contacts 1
1.1 Directions to Hospital 2

2. Introduction 5

3. Organizational Structure 6
3.1 Roles and Responsibilities 6
3.1.1 Project Manager 6
3.1.2 Site Safety and Health Officer 6
3.1.3 Project Personnel 6
3.1.4 Operations Manager 7
3.2 Engineering Consultant 7
3.3 Stop Work Authority 7

4. Work Plan 8
4.1 Site Background 8
4.2 Technology Overview 8
4.3 Planned Activities 9
4.3.1 Subsurface Installation 9
4.3.2 Aboveground Installation 9
4.3.3 Acceptance Testing and Commissioning 10
4.3.4 Operations 10
4.3.5 Demobilization 10

5. Hazards and Controls 12
5.1 Job Safety Analysis Procedures 12
5.2 Electrical Hazards 12
5.2.1 Definitions 12
5.2.2 Electricity and the Human Body 13
5.2.3 Limits of Approach 13
5.2.4 Arc Flash Hazards 14
5.2.5 Mitigation of Electrical Hazards 15
5.3 Lockout-Tagout Program 15
5.3.1 Responsibilities 15
5.3.2 Procedures 16
5.3.3 Shift Changes 17
5.3.4 Multiple Individuals 17
5.4 Chemical Hazards 17
5.4.1 Permissible Exposure Limits 18
5.4.2 Recommended Exposure Limits and Threshold Limit Values 18
5.4.3 Mitigation of Chemical Hazards 18
5.5 Heat Stress 20
5.5.1 Heat-Related Illnesses 20
5.5.2 Heat Index and Weather Monitoring 20
5.5.3 Heat Stress Mitigation 21
5.5.4 Drinking Water 22
5.6 Cold Stress 22
5.6.1 Cold-Related Illnesses 22

5.6.2 Wind Chill and Weather Monitoring *23*
5.6.3 Cold Stress Mitigation *24*
5.7 Burn Hazards 24
5.8 Pressure Hazards 25
5.8.1 Hoses and Lines *25*
5.8.2 Compressed Air and Gas Cylinders *25*
5.8.3 Steam Boilers *26*
5.8.4 Pressure Washers *26*
5.9 Slips, Trips, and Falls 26
5.9.1 Fall Protection *27*
5.9.2 Ladder Use *27*
5.10 Confined Space Entry 27
5.11 Utility Hazards 27
5.11.1 Subsurface Utilities *27*
5.11.2 Overhead Utilities *28*
5.12 Excavations and Trenching 28
5.12.1 General Hazard Controls *29*
5.12.2 Protective Systems and Hazardous Atmospheres *29*
5.13 Hand and Power Tools 29
5.13.1 Hand Tools *30*
5.13.2 Power Tools *30*
5.13.3 Guards *31*
5.14 Ergonomics 31
5.15 Hearing Conservation 32
5.16 Drilling Hazards 32
5.17 Vacuum Trucks 33
5.18 Powered Industrial Trucks 33
5.19 Hoisting and Rigging 34
5.20 Traffic Control 34
5.21 Illumination 34
5.22 Sanitation and Hygiene 35
5.23 Silicosis and Dust Control 35
5.24 Biological Hazards 36
5.24.1 COVID-19 ..... *36*
5.25 Motor Vehicle Safety 36
5.26 Lone Workers 37
5.27 Extended Hours and Fatigue 37

6. Hazard Communication Program 38
6.1 List of Hazardous Substances 38
6.2 Identifying Containers of Hazardous Chemicals 38
6.3 Safety Data Sheets 38
6.4 Training 38
6.5 Non-Routine Tasks and Subcontractors 39

7. Monitoring 40
7.1 Air Monitoring 40
7.1.1 Site and Personnel Monitoring *42*
7.1.2 Monitoring of IDLH and Dangerous Conditions *42*
7.1.3 Perimeter Monitoring *42*
7.2 Noise Monitoring 42

8. Site Control 43
8.1 Site Map 43
8.2 Security and Access 43
8.3 Site Work Zones 43
8.4 Communication Methods 43

9. Training and Medical Surveillance 44
9.1 Training Requirements 44
9.1.1 HAZWOPER Training 44
9.1.2 Site-Specific Training 44
9.1.3 Additional Training 45
9.2 Medical Surveillance 46

10. Personal Protective Equipment 47
10.1 Levels of Protection 47
10.2 PPE Selection 49
10.3 Respiratory Protection 50
10.4 Storage, Maintenance, and Inspection 50
10.5 Use and Training 50
10.6 Decontamination and Disposal 51
10.7 New Technologies 51

11. Decontamination 52
11.1 Decontamination Procedures 52
11.1.1 Personnel and PPE 52
11.1.2 Equipment and Vehicles 54
11.2 Decontamination Workers 54
11.3 Decontamination Effectiveness 54
11.4 Polychlorinated Biphenyls 54
11.5 Program Evaluation 55

12. Respiratory Protection Program 56
12.1 Responsibilities 56
12.2 Hazards and Respirator Selection 57
12.3 Medical Evaluations 58
12.4 Fit Testing Procedures 58
12.5 Respirator Use 58
12.5.1 Inspection 59
12.5.2 Storage 59
12.5.3 Cleaning and Disinfecting 60
12.6 Respirator Training 60
12.7 Program Evaluation 60
12.8 Documentation and Recordkeeping 60

13. Spill Containment Program 61
13.1 Potential Spills 61
13.2 Spill Prevention 61
13.3 Spill Response 62
13.3.1 Notification 62
13.3.2 Response 62
13.3.3 Disposal 62
13.3.4 Reporting 62
13.4 Equipment and Materials 63

13.5 Potassium Permanganate....63
13.6 Post-Spill Evaluation....63

14. Handling Hazardous Materials....64
14.1 General Requirements....64
14.2 Opening Vessels....64
14.3 Handling Vessels....64
14.4 Transferring Between Vessels....64

15. Emergency Response....66
15.1 Pre-Emergency Planning....66
15.2 Personnel Roles....66
15.3 Recognition and Prevention....66
15.4 Emergency Procedures....66
15.5 Safe Distances and Places of Refuge....67
15.6 Site Security and Control....67
15.7 Evacuation....67
15.8 Emergency PPE and Equipment....67
15.9 Decontamination Procedures....68
15.10 Medical Treatment and First Aid....68
15.11 Alerting and Response Procedures....68
15.12 Critique of Response and Follow-Up....68

16. Recordkeeping....69
16.1 Site Safety Forms....69
16.2 Field Notes....69
16.3 Training....69
16.4 Medical Surveillance....69
16.5 Accident Reporting....69

17. References....72

Appendix A – Figures....A

Appendix B – Job Safety Analysis (JSA) Procedures....B

Appendix C – Chemical Information and Safety Data Sheets....C

Appendix D – Arc Flash Hazard Analysis....D

Appendix E – Site Safety Forms....E

List of Tables

Table 1: Local emergency contacts 1
Table 2: Project organization and contact information 1
Table 3: Electrical definitions 12
Table 4: Human response to electric current 13
Table 5: Limits of approach for shock protection for AC systems (NFPA 70E) 14
Table 6: PPE for chemicals commonly used on site 18
Table 7: Heat index and risk of heat stress (OSHA, 2017) 21
Table 9: Threshold Limit Values for heat stress exposure (OSHA, 2017). 22
Table 9: Work/warm-up schedule for a 4 hour shift (OSHA, 2017). 24
Table 10: Minimum overhead clearance distances 28
Table 11: Air monitoring instruments 40
Table 12: Air monitoring action levels assuming a 10.6 eV PID calibrated to isobutylene 41
Table 14: Training requirements 45
Table 15: Levels of protection (adapted from NIOSH/OSHA/USCG/EPA, 1985) 47
Table 16: PPE selection for chemical hazards 49
Table 17: Decontamination steps for personnel in Level C protection 53
Table 17: Anticipated respiratory hazards and respirator selection 57
Table 18: Daily report format 71

List of Figures

Figure 1: Directions to hospital – Map 2
Figure 2: Directions to hospital - Instructions 4
Figure 3: Limits of approach (NFPA 70E) 14
Figure 4: Heat index chart (NWS, 2018) 21
Figure 5: Wind chill chart (NWS, 2018) 23
Figure 6: Example work zone traffic control guidelines from INDOT (2013) 35
Figure 7: Decontamination layout for personnel in Level C protection 52

Nomenclature

Abbreviations

AC	Alternating Current
ASME	American Society of Mechanical Engineers
BGS	Below Ground Surface
CERCLA	Comprehensive Environmental Response, Compensation and Liability Act
CO	Carbon monoxide
COC	Constituent of Concern
DNAPL	Dense Non Aqueous Phase Liquid
DOT	Department of Transportation
e.g.	Exempli Gratia (for example)
EPA	Environmental Protection Agency
ESD	Emergency Shutdown Device
ESV	Energy Safe Victoria
GFCI	Ground Fault Circuit Interrupters
H2S	Hydrogen sulfide
HASP	Health and Safety Plan
HAZWOPER	Hazardous Waste Operations and Emergency Response Standard
IDLH	Immediately Dangerous to Life or Health
i.e.	Id Est (that is)
ISTR	In Situ Thermal Remediation
JSA	Job Safety Analysis
LEL	Lower Explosive Limit
LOTO	Lockout-Tagout
Mc²	McMillan-McGee Corporation
MSD	Musculoskeletal Disorder
NAPL	Non-Aqueous Phase Liquid
NEC	National Electrical Code
NFPA	National Fire Protection Association
NIOSH	National Institute for Occupational Safety and Health
O2	Oxygen
OCD	Occupational Chemical Database
OSHA	Occupational Safety and Health Administration
O&M	Operations and Maintenance
PCB	Polychlorinated Biphenyl
PCE	Tetrachloroethene
PDP	Power Distribution Panel
PDS	Power Delivery System
PEL	Permissible Exposure Limit
PFAS	Personal Fall Arrest System
PID	Photoionization Detector
PLHCP	Physician or other Licensed Health Care Professional
PPE	Personal Protective Equipment
RCRA	Resource Conservation and Recovery Act
RDR	Remedial Design Report

REL	Recommended Exposure Limit
RFP	Request for Proposal
SDS	Safety Data Sheets
SOP	Standard Operating Procedure
SSHO	Site Safety and Health Officer
STEL	Short-Term Exposure Limit
SVOC	Semi Volatile Organic Compound
TCE	Trichloroethene
TDCM	Time-Distributed Control Mechanism
™	Trademark
TSCA	Toxic Substances Control Act
TWA	Time Weighted Average
UL	Underwriters Laboratories
VC	Vinyl Chloride, Chloroethene
VOC	Volatile Organic Compound

Units of Measurement

A	Amps
°C	Degrees Celsius
dBA	Decibel A-weighting
°F	Degrees Fahrenheit
ft	Foot
gpm	Gallons per Minute
kW	Kilowatt
lb	Pound
ppm	Parts per Million
scfm	Standard Cubic Feet per Minute
V	Volts
V/m	Volts per Meter
Ω	Ohm

1. Emergency Contacts

Site Name: Roxana Public Works Yard

Address: Public Works Yard, 143 E 8th St., Roxana, Illinois 62084, United States

Table 1: Local emergency contacts

Name	Address	Phone
Emergency	N/A	911
Hospital	One Memorial Dr, Alton, IL	+1-618-463-7311
Fire Department (Non-Emergency)	400 S Central Ave # C, Roxana, IL	+1-618-254-8293
Police (Non-Emergency)	310 N Central Ave, Roxana, IL	+1-618-254-1945
IEMA Emergency Response	N/A	217-782-7860
Poison Control	N/A	1-800-222-1222

Table 2: Project organization and contact information

Organization and Role	Contact Names	Role	Contact Information
Shell	Leroy (Buddy) Bealer	Project Manager	leroy.bealer@shell.com
			-
	Cristin Bruce	Technical Lead	Cristin.Bruce@shell.com
			-
AECOM	Wendy Pennington	Project Manager	wendy.pennington@aecom.com
			+1 (314) 452-8929
	Brett Howell	Field Lead	brett.howell@aecom.com
			+1 (309) 530-5666
	Samuel Fisher	Deputy Project Manager	samuel.fisher@aecom.com
			+1 (314) 296-1969
	Peter Stumpf	Technical Consultant	peter.stumpf@aecom.com
			+1 (714) 689-7187
	David Macone	Technical Consultant	david.macone@aecom.com
			+1 (978) 905-2538
McMillan-McGee	Clayton Campbell	Project Manager	ccampbell@mcmillan-mcgee.com
			+1 (403) 569-5104
			+1 (403) 660-8561
	Janine Schmitke	Project Engineer	jschmitke@mcmillan-mcgee.com
			+1 (403) 569-5125
			+1 (403) 829-8563
	David Rountree	Technical Review	drountree@mcmillan-mcgee.com
			+1 (403) 569-5116
			+1 (403) 921-0848
	Brent Winder	Project	bwinder@mcmillan-mcgee.com

		Director	+1 (403) 569-5103
			+1 (403) 589-8726
	Jerry Bignall	Site Supervisor	jbignall@mcmillan-mcgee.com
			+1 (314) 960-7292
	Wayne Robella	Operations Manager	wrobella@mcmillan-mcgee.com
			+1 (403) 569-5106
			+1 (403) 461-1669

1.1 Directions to Hospital

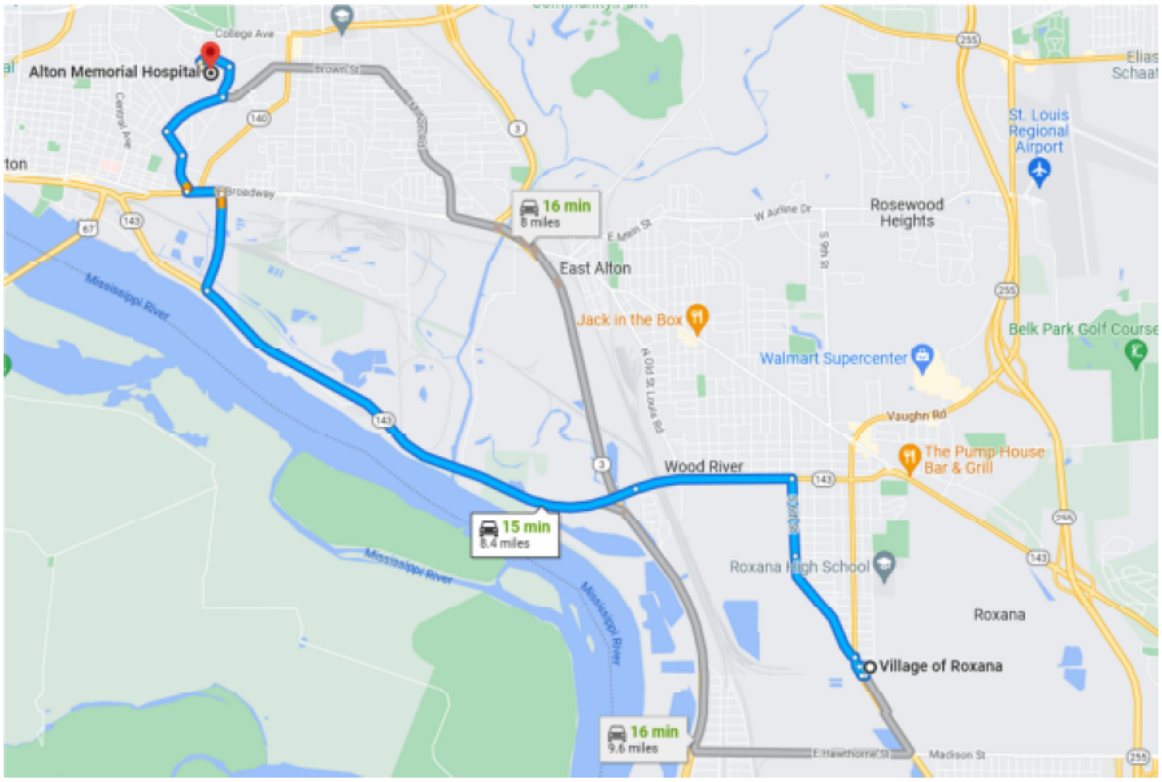

Figure 1: Directions to hospital – Map

Village of Roxana
143 E 8th St, Roxana, IL 62084, United States

Take E 8th St and S Old Edwardsville Rd to IL-111 N/S Central Ave

50 s (0.2 mi)

1. Head west on E 8th St toward S Old Edwardsville Rd

384 ft

2. Turn left onto S Old Edwardsville Rd

400 ft

3. Turn right toward IL-111 N/S Central Ave

128 ft

4. Turn right at the 1st cross street onto IL-111 N/S Central Ave

19 s (0.1 mi)

Continue on S Old Edwardsville Rd to Wood River

2 min (1.3 mi)

5. Turn left onto S Old Edwardsville Rd

0.8 mi

6. Continue onto S 6th St

0.5 mi

Take IL-143 W to Cpl Belchik Memorial Expy in Alton

6 min (4.4 mi)

7. Turn left onto E Madison Ave

1.1 mi

8. Continue onto IL-143 W/W Ferguson Ave
Continue to follow IL-143 W

3.4 mi

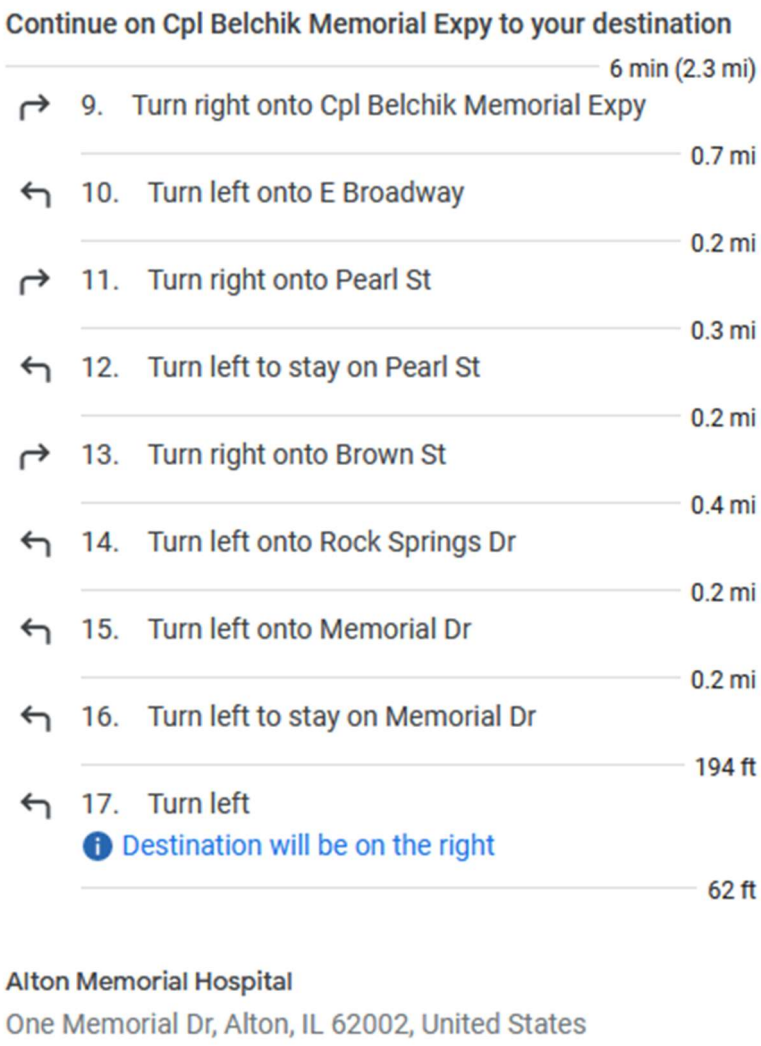

Figure 2: Directions to hospital - Instructions

2. Introduction

McMillan-McGee Corporation (Mc²) has prepared this Site-Specific Health and Safety Plan (HASP) to identify, evaluate, and control safety and health hazards, and provide emergency response procedures, associated with in-situ thermal remediation (ISTR) application at the Roxana Public Works Yard (Site), located in Roxana, Illinois. It is intended for use by Mc² employees, subcontractors, vendors, and other personnel engaged in the ISTR application. In addition to the requirements of this HASP, all subcontractors, vendors, and other third-party personnel engaged in the ISTR application are responsible for themselves maintaining compliance with any relevant national and local regulations throughout the entire execution of their scope.

Steam Enhanced Extraction (SEE) is an ISTR technology that injects steam into the subsurface to increase temperatures up to approximately 100°C and extracts a contamination of vapors and liquid for treatment aboveground. This technology will utilize a steam boiler and can generate elevated vapor concentrations of volatile organic compounds (VOCs) and semi-volatile organic compounds (SVOCs) that may be present in the subsurface. Procedures to manage these and other hazards associated with the ISTR application are presented in this document.

This plan has been prepared to address the requirements of the Occupational Safety and Health Administration (OSHA) Hazardous Waste Operations and Emergency Response Standard (HAZWOPER) (29 CFR 1910.120). In addition, this plan includes a written Hazard Communication Program and Respiratory Protection Program to satisfy the requirements of 29 CFR 1910.1200(e) and 29 CFR 1910.134(c). Activities must be performed in accordance with this HASP and any other relevant federal, state, and local regulations (e.g., 29 CFR 1910, 29 CFR 1926). This plan is intended to supplement any existing site health and safety plan(s) with details specific to the ISTR implementation.

A signed copy of the HASP will be maintained onsite at all times during the performance of work. Its contents must be reviewed and acknowledged by all Mc² employees, subcontractors, vendors, and other personnel engaged in the ISTR application prior to commencing field work at the site. This plan will be periodically reviewed and modified as necessary to address changes in site condition or new information that becomes available. Proposed modifications must be reviewed and approved by the Project Engineer and Operations Manager prior to implementation.

3. Organizational Structure

The lines of authority and overall responsibilities of Mc² employees, subcontractors, vendors, and other personnel engaged in the ISTR application are described in this section to address the requirements of 29 CFR 1910.120(b)(2).

3.1 Roles and Responsibilities

Mc² is the vendor responsible for the design and implementation of the ISTR system at the site. Key contacts from Mc² are presented in Table 2.

3.1.1 Project Manager

The Project Manager will act as the general supervisor who has the responsibility and authority to direct hazardous waste operations associated with the ISTR implementation. The Project Manager serves as the primary point of contact for communication between site personnel and upper-level management, engineering consultants, site owners, regulatory agencies, or public officials. Clayton Campbell is designated as the Project Manager. Responsibilities of the Project Manager include:

- Preparing and organizing the Remedial Design Report (RDR), the Operations and Maintenance (O&M) Plan, the HASP, and the field team;
- Coordinating the ISTR implementation with the engineering consultants, site owners, and other applicable parties;
- Communicating the requirements of the HASP to any subcontractors, vendors, or other personnel engaged in ISTR application; and,
- Working with the Site Safety and Health Officer (SSHO) to ensure compliance with the HASP during field activities.

3.1.2 Site Safety and Health Officer

The SSHO has the responsibility and authority to develop and implement the HASP, and verify compliance. The SSHO reports to the Project Manager. Based on the specific project personnel onsite, a SSHO will be designated at the beginning of each day. This will be noted on the Daily Job Hazard Analysis form (Appendix E – Site Safety Forms). Individuals who may assume this role for Mc^2 include Jerry Bignall, David Rountree, Judd Doffing, or Brad Rizzo. Responsibilities of the Safety and Health Supervisor include:

- Managing the implementation of this HASP, ensuring all applicable personnel understand, acknowledge, and comply with its contents;
- Conducting regular health and safety meetings to review hazards and safe work practices associated with the specific tasks being performed onsite;
- Assessing site hazards and conditions and provide correction actions for any unsafe conditions or site activities;
- Ensuring worker training and compliance with medical surveillance requirements;
- Selecting and periodically inspecting protective clothing and equipment, ensuring they are properly stored and maintained; and,
- Notifying and coordinating with emergency responders.

3.1.3 Project Personnel

All employees, subcontractors, and other project personnel have the responsibility to obey the requirements of this HASP and any other relevant federal, state, and local regulations.

Subcontractors must ensure that Mc² is aware of hazards associated with their scope of work, whether previously identified or not, and inform Mc² of how the contract employer is addressing hazards. Any unsafe condition or site activities must be communicated by project personnel to the SSHO. Responsibilities of project personnel include:

- Understanding the contents and acknowledging their review of the HASP;
- Performing site activities and procedures safely in accordance with the HASP and any other relevant national, provincial/state/state, and local regulations;
- Correctly using personal protective equipment (PPE) and clothing;
- Recognizing and reporting any unsafe site conditions or activities to the SSHO; and,
- Informing the SSHO of underlying medical issues, allergies, or prescription medications being taken.

3.1.4 Operations Manager

The Operations Manager is responsible for the overall implementation of any applicable health and safety programs during field operations at Mc² projects. Wayne Robella is designated as the Operations Manager. Other responsibilities include:

- Approving the HASP and Job Safety Analysis (JSA) procedures;
- Ensuring compliance with the training and medical surveillance programs;
- Developing and implementing the Lockout-Tagout Program;
- Ensuring compliance of the Hazard Communication Program;
- Administering the Respirator Protection Program; and,
- Overseeing the implementation of other applicable health and safety programs.

3.2 Engineering Consultant

AECOM is the engineering consultant providing technical oversight for the SEE implementation, and has the responsibility and authority to direct overall hazardous waste operations at the site. In addition, the engineering consultant will serve as liaison with site owners, regulatory agencies, and the public, and will work to incorporate any of their potential health and safety concerns into the overall execution of the project. The Project Manger will discuss any health and safety concerns with the engineering consultant and solicit input to inform any decisions or corrective actions that may be required. Key contacts from AECOM are presented in Table 2.

3.3 Stop Work Authority

All personnel engaged in the ISTR implementation have Stop Work Authority if they observe an unsafe condition or personnel engaging in unsafe activities. If such a condition or activity is observed, personnel must stop work, notify the SSHO, correct the unsafe condition or activity, and then resume work. The SSHO must engage in documentation and communication of the work stoppage to the Project Manager. Stop Work Authority can be implemented by any person without blame or any other adverse consequence.

4. Work Plan

The site background, project objectives, and general activities associated with the ISTR implementation are summarized in this section, to address the requirements of 29 CFR 1910.120(b)(3). Additional elements of the work plan, such operating procedures and training requirements, are presented in the RDR deliverable and elsewhere in this HASP. A site map is provided in Appendix A – Figures. Job Safety Analyses (JSAs) covering site activities are included in Appendix B. Subcontractor JSAs will be submitted separately as needed before applicable site activities.

4.1 Site Background

The Public Works Yard is located in a mixed use area surrounded by industrial users, primarily petroleum refining and storage facilities. The Site is bounded by Old Edwardsville Road to the west, East Eighth Street to the north, a rail corridor to the south, the Phillips 66 Wood River Refinery directly to the east. The nearest residential properites are located on the north side of East Eighth Street approximately 80 feet from treatment zone Area A.

The primary contaminant of concern (COC) at the site is benzene. However, a total of 142 volatile and semi volatile organic compounds (VOC and SVOC) were analyzed for in both the soil and groundwater at the Site and a number of other VOCs and SVOCs were identified to be present. Benzene was the mostly commonly encountered contaminant while 1-methylnapthalene was the second most commonly encountered contaminant in both soil and groundwater. Kerosene is present in a localized area.

4.2 Technology Overview

SEE is a ISTR technology that uses low pressure steam to heat the subsurface. This steam is passed to a network of screen injection wells installed in the subsurface, and the porosity of the treatment volume enables steam injection.

Some components listed below are specific to SEE, and are noted as such below. The ISTR system will consist of some or all of the following components:

(i) *Steam Boiler* – A natural gas steam boiler is used to produce low pressure steam. It is contained in a stand-alone inclement weather 53 foot trailer.

(ii) *SEE Injection Wells* – Steam injection wells are designed to distribute steam through a targeted volume of the subsurface in order to increase its temperature. Steam injection rates are measured and controlled using instrumentation at surface. An aboveground piping network, equipped with steam traps and drip legs, is used to transfer steam from the boiler to the injection wells.

(iii) *Extraction Equipment* – Slurper tubes or pumps are used to extract contaminated liquids from the subsurface, while the vacuum applied at the treatment system is used to extract contaminated vapors from the subsurface. These fluids are collected into an aboveground piping network and transferred into the inlet of the aboveground treatment system.

(iv) *Treatment System* – The treatment system processes contaminated fluids using components such as blowers, pumps, settling tanks, oil-water separators, air strippers, and activated carbon filtration media. Treated liquids are discharged to sewer, while treated vapors are discharged to atmosphere.

4.3 Planned Activities

The ISTR implementation will be comprised of field activities that include site preparation, subsurface installation, aboveground installation, acceptance testing and commissioning, operations, and demobilization. Prior to performing work onsite, Mc² employees, subcontractors, vendors, and other personnel engaged in the ISTR application must participate in a pre-entry briefing and review this HASP to be familiar with the nature, level, and degree of potential exposure associated with the activities described herein.

4.3.1 Subsurface Installation

Subsurface installation will include:

- Site preparation activities, such as marking out subsurface utilities, identifying over head utility no-drill zones, abandoning existing monitoring wells, erecting a perimeter fence, making temporary utility connections,setting up temporary facilities (office and sanitary), and establishing waste accumulation and decontamination areas;
- Civil construction, including leveling ground above the retaining wall;
- Installation of the SEE injection wells, extraction wells, and temperature monitoring points;
- Management, characterization, and disposal of investigation derived waste; and,
- Development of the extraction wells.

The personnel required to complete the subsurface installation may include:

- Mc² technicians or engineers;
- Surveyor;
- Utility locate contractor;
- Civil contractor (subcontracted by others);
- A drilling contractor; and,
- The engineering consultant.

4.3.2 Aboveground Installation

Aboveground installation will include:

- Delivery and staging of the ISTR and treatment equipment;
- Installation of the SEE injection wells to the steam boiler using conveyance piping network;
- Installation of the data acquisition and telemetry systems;
- Wellhead installation and connection to an extraction piping network;
- Interconnection of the treatment system components;
- Connection of the electrical power and control cables;
- Connection of the ISTR and treatment system to the utility services; and
- Heavy machinery operations including crane and telehandler use for offloading of equipment.

The personnel required to complete the aboveground installation may include:

- Mc² technicians or engineers;
- Environmental technicians or engineers;
- Trucking and crane services;
- Electrical contractor services;

- General laborers; and,
- The engineering consultant.

4.3.3 Acceptance Testing and Commissioning

Acceptance testing and commissioning will include:

- Energizing and testing the treatment system;
- Verifying all SEE injection well connections;
- Automatic warm up of the steam injection network (boiler, piping, and wellheads)
- Pressure and leak testing the steam injection piping;
- Pressure and leak testing the extraction and treatment system;
- Verifying the treatment system control logic and alarm call-outs; and,
- Performing the initial start-up of the ISTR and treatment systems.

The personnel required to complete the aboveground installation may include:

- Mc² technicians or engineers;
- Environmental technicians or engineers; and,
- The engineering consultant.

4.3.4 Operations

Operations will include:

- Recording flow rates, temperatures, vacuums, equipment indicators, and photoionization detector (PID) and/or Flame Ionization Detector (FID) responses throughout the injection, extraction, and treatment system;
- Sampling vapor and liquid for performance monitoring and permit compliance;
- Optimizing the system and responding to upset conditions as needed;
- Preventative maintenance of the ISTR and treatment equipment;
- Hot soil and/or groundwater sampling, if required; and
- 24/7 emergency system response, which may require night work, including but not limited to treatment system spills.

The personnel required to complete operations may include:

- Mc² technicians or engineers;
- Environmental technicians or engineers; and,
- The engineering consultant.

4.3.5 Demobilization

Demobilization will consist of:

- De-energizing and disconnecting the treatment equipment, including removing downhole sensors;
- Treatment system decontamination and disposal of backup carbon;
- Load-out and shipping of the ISTR and treatment equipment offsite; and
- Well abandonment and site restoration.

The personnel required to complete the demobilization may include:

- Mc² technicians or engineers;
- Environmental technicians or engineers;
- General laborers;

- Trucking and crane services;
- Carbon supplier;
- A drilling contractor; and,
- The engineering consultant.

5. Hazards and Controls

The chemical, physical, and biological hazards anticipated during the ISTR implementation are summarized in this section. Controls used to protect site personnel from these hazards are also discussed. Health and safety hazards will be evaluated as the project progresses, and assessed based their frequency and severity.

5.1 Job Safety Analysis Procedures

JSA procedures which identify potential hazards associated with the installation and operation of the ISTR and treatment equipment, and recommend safe work procedures to mitigate those hazards, are presented in Appendix B – Job Safety Analysis (JSA) Procedures. These JSA procedures also function as the Standard Operating Procedures (SOPs) to which personnel should adhere.

5.2 Electrical Hazards

Electrical hazards are possible as part of the ISTR treatment system, and will be controlled through compliance with the requirements of the National Fire Protection Association (NFPA) 70E, 29 CFR 1910 Subpart S, 29 CFR 1926 Subpart K, the National Electrical Code (NEC), and other relevant federal, state, and local regulations. Electrical tasks will be performed by qualified persons familiar with the ISTR treatment system.

5.2.1 Definitions

Definitions of relevant electrical terms are presented in Table 3.

Table 3: Electrical definitions

Term	Definition
Current [A]	The rate of electric charge flow in a conductive material, such as a wire or ionic solution.
Effective Current [A]	The effective amount of electric current delivered, which can be calculated as $I_e = I_{rms}$ (TDCM%/100)
Electric Field [V/m]	The difference in voltage between two points spaced one meter apart. Surface electric fields are measured with the step potential test.
Floating System	A current return line not connected to the electrical utility
Flow Rate [lpm]	The rate of fluid flow, such as the rate of water injection to the boiler.
Ground	Indicates a location where the reference potential of a system is usually taken as zero volts. Most electrical system potentials are referenced to ground. There may be more than one ground reference in a system.
Power [kW]	Electric power is rate at which electrical energy is transferred in a conductive material or circuit.
Effective Power [kW]	The effective amount of electric power delivered, which is the product of the effective current and the voltage.
Load [Ω]	The load is the component of the electrical system that consumes power, given in terms of resistance (ohms).
Safety Fence	Fence located around the well field.
Step Potential [V]	The voltage drop between any two locations on the surface of the earth, usually taken one meter apart, representing the voltage that could be encountered from one leg to the other when taking a long stride.

Touch Potential [V]	The voltage of surface equipment with respect to nearby earth.
Voltage [V]	The difference in electrical potential that drives the flow of electric current.

5.2.2 Electricity and the Human Body

The effects of electric shock on the human body depend on the magnitude of the electric current, the parts of the body through which that electric current flows, and the condition of the person exposed to the electric shock. The magnitude of electric current depends on the voltage and the resistance of the path through which the current flows. The resistance of the human body when it is wet from perspiration can be as low as 2,000 Ω. If exposed to 120 V, the current flow through the body will be about 60 mA, which is sufficient to cause death. If exposed to 2 V, the current will be about 1 mA; sufficient to cause a mild sensation in the worst case, but most likely imperceptible if proper gloves and footwear are worn. The nominal human response to different magnitudes of electric current is presented in Table 4.

Table 4: Human response to electric current

Current	Physiological Phenomena	Sensation or Lethal Incidence
< 1mA	None	Imperceptible
1 mA - 3 mA	Perception threshold	Mild sensation
3 mA - 10 mA	Perception threshold	Painful sensation
10 mA	Paralysis threshold of arms	Cannot release hand grip; victim may be thrown clear or may progress to higher currents and be fatal
30 mA	Respiratory paralysis	Stoppage of breathing (often fatal)
75 mA	Fibrillation threshold (50%)	Heart action stops (probably fatal)
250 mA	Fibrillation threshold (99.5%)	Heart action stops (probably fatal)
4 A	Heart paralysis	Heart stops for duration of current passage. For short shocks, heart may restart
>5 A	Tissue burning	Fatal if vital organs burn

The most common physical sensation of electric shock is a severe stabbing and numbing pain at the entry and exit of current, and sometimes along the path that the current takes as it travels through the body. Involuntary contraction of muscles is often associated with an exposure, rendering the person unable to let go of the conductor that caused the electric shock. Additionally, muscles associated with the respiratory system may contract strongly and prevent breathing, thereby causing suffocation and possibly death. Death by electric shock is caused by direct interference with the action of the heart. This is commonly known as ventricular fibrillation. Fibrillation can be caused with as little as 75 mA. Above 250 mA, fibrillation is likely.

5.2.3 Limits of Approach

For protection from electric shock, the limits of approach presented in NFPA 70E Table 130.4(D)(a) and Table 130.4(D)(b) will be observed (e.g., Figure 3, Table 5). No unqualified person may approach nearer than the *limited approach boundary* of energized conductors and circuit parts, unless they are under the direct supervisor of a

qualified person and are wearing appropriate PPE for the hazards involved. No qualified person may approach nearer than the *restricted approach boundary* of energized conductors or circuit parts, unless that person or the energized equipment is insulated or guarded in accordance with the requirements of NFPA 70E 130.4(D).

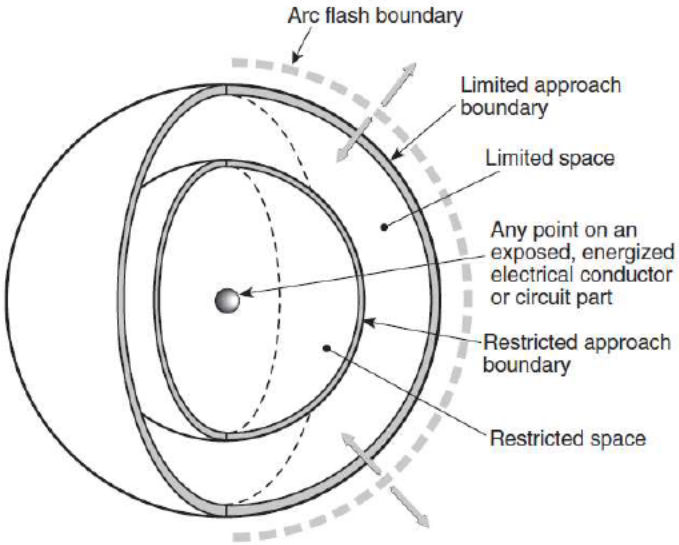

Figure 3: Limits of approach (NFPA 70E)

Table 5: Limits of approach for shock protection for AC systems (NFPA 70E)

Nominal System Voltage Range, Phase to Phase	Limited Approach Boundary		Restricted Approach Boundary
	Exposed Movable Conductor	Exposed Fixed Circuit Part	
< 50 V	Not specified	Not specified	Not specified
50 V – 150 V	3.0 m (10 ft 0 in.)	1.0 m (3 ft 6 in.)	Avoid contact
151 V – 750 V	3.0 m (10 ft 0 in.)	1.0 m (3 ft 6 in.)	0.3 m (1 ft 0 in.)
751 V – 15 kV	3.0 m (10 ft 0 in.)	1.5 m (5 ft 0 in.)	0.7 m (2 ft 2 in.)
15.1 kV – 36 kV	3.0 m (10 ft 0 in.)	1.8 m (6 ft 0 in.)	0.8 m (2 ft 7 in.)

For full details please refer to NFPA 70E Table 130.4(D)(a)

5.2.4 Arc Flash Hazards

Arc flash hazards associated with the ISTR treatment system implementation and the PPE to mitigate these hazards will comply with the requirements of (i) an arc flash hazard analysis based on NFPA 70E Annex D, or (ii) NFPA 70E Table 130.7(C)(15)(a), Table 130.7(C)(15)(b), and Table 130.7(C)(16). This will include *arc flash boundaries* to be established, within which a person could receive a second degree burn in the event of an arc flash (i.e., 1.2 cal/cm^2 incident energy). Only qualified persons may perform tasks near energized conductors or circuit parts within the *arc flash boundary* and must be trained in NFPA 70E requirements and procedures. An arc flash hazard analysis for this project is presented in Appendix D – Arc Flash Hazard Analysis.

5.2.5 Mitigation of Electrical Hazards

The JSA package (Appendix B – Job Safety Analysis (JSA) Procedures) includes several key procedures that are necessary to mitigate electrical hazards during the ISTR application, such as:

- Steam Boiler Shutdown and Startup;
- Treatment System Shutdown and Startup; and
- Single-Source Lockout-Tagout (LOTO).

The Operations and Maintenance (O&M) Plan includes additional details on these and other key procedures to mitigate electrical hazards. These procedures should be reviewed prior to performing any work during acceptance testing, operations, and demobilization. Other electrical hazard controls and safe work practices include:

- Access to the treatment compound area will be restricted to qualified personnel only;
- Personnel will use PPE and protective barriers required for the hazards involved;
- No live electrical components above ground surface may be exposed;
- Electrical tools and equipment will be protected from environmental hazards;
- Equipment will not be suspended by its electrical cord, unless designed to do so;
- Extension cords must be (i) covered, elevated or protected from damage, (ii) equipped with third-wire grounding, (iii) be inspected prior to use to make sure they are not damaged, and (iv) used such that they are NOT routed through doors, fastened with staples, hung from nails, or suspended with wire;
- Ground Fault Circuit Interrupters (GFCIs) will be used on 120 V, single phase 15 A and 20 A receptacle outlets which are not part of the permanent wiring of the building or structure to protect personnel from electric shock;
- The treatment equipment and well field piping network will be grounded in accordance with relevant national, provincial/state/state, and local regulations; and,

5.3 Lockout-Tagout Program

The control of hazardous energy whenever maintenance or servicing is done on machines or equipment will be accomplished via lockout-tagout in accordance with the requirements of 29 CFR 1910.147. The purpose of the lockout-tagout program is to ensure that machines or equipment are isolated from all potentially hazardous energy sources and locked out prior to performing servicing, maintenance, or repairs. Hazardous energy sources anticipated at Roxana Public Works Yard Site include electricity, compressed air, steam, hot fluids, and vacuum.

5.3.1 Responsibilities

Site personnel are assigned various responsibilities with regards to lockout-tagout. Signature of the HASP acknowledgement (Appendix E – Site Safety Forms) indicates that site personnel have received training.

- The Operations Manager and Project Manager are responsible for developing and implementing the lockout-tagout program;
- The SSHO is responsible for enforcing the lockout-tagout program onsite and ensuring applicable documentation is kept;

- The following *authorized employees* may lockout-tagout a machine or piece of equipment in order to perform servicing, maintenance, or repairs, and are responsible for following established lockout-tagout procedures:
    - Jerry Bignall;
    - Clayton Campbell;
    - Shiella Delos Reyes;
    - Judd Doffing;
    - Tayze Fewer;
    - Dr. Bruce McGee;
    - Dave Perley;
    - Eric Ringdahl;
    - Brad Rizzo
    - Wayne Robella:
    - David Rountree;
    - Janine Schmitke; and,
    - Brent Winder;

  Other authorized employees who may lockout or tagout a machine or piece of equipment will be noted in the Lockout-Tagout Forms (Appendix E – Site Safety Forms).
- Upon observing issuance of the lockout or tagout, *affected employees*, who may operate the machine or piece of equipment, must not attempt to start, energize, or use that machine or piece of equipment.

5.3.2 Procedures

Lockout-Tagout Forms are found in Appendix E – Site Safety Forms. Most of the ISTR and treatment equipment is expected to fall under the exceptions of 29 CFR 1910.147(c)(4)(i). A single-source lockout-tagout JSA procedure is presented in Appendix B – Job Safety Analysis (JSA) Procedures, and is referenced in other JSA procedures where required.

The procedure for equipment lockout-tagout is comprised of:

- Notifying all affected employees that servicing or maintenance is required on a machine or equipment and that the machine or equipment must be shut down and locked out to perform the servicing or maintenance;
- Identifying the type and magnitude of the energy that the machine or equipment utilizes, understanding the hazards of the energy, and knowing the methods to control the energy;
- If the machine or equipment is operating, shutting it down by the normal stopping procedure (depress the stop button, open switch, close valve, etc.);
- De-activating the energy isolating device(s) so that the machine or equipment is isolated from the energy source(s);
- Locking out the energy isolating device(s) with assigned individual lock(s);
- Dissipating or restraining stored or residual energy, such as that in capacitors, springs, elevated machine members, rotating flywheels, hydraulic systems, and air, gas, steam, or water pressure, by methods such as grounding, repositioning, blocking, or bleeding down, as applicable;
- Ensuring that the equipment is disconnected from the energy source(s) by first checking that no personnel are exposed, then verifying the isolation of the equipment by operating the push button or other normal operating control(s), or by testing to make certain the equipment will not operate;

- Returning operating control(s) to neutral or “off” position after verifying the isolation of the equipment; and,
- Notifying affected employees that the machine or equipment is now isolated.

To restore the equipment back to service after maintenance or repairs are complete:

- Checking the machine or equipment and the immediate area around the machine to ensure that non-essential items have been removed and that the machine or equipment components are operationally intact;
- Checking the work area to ensure that all employees have been safely positioned or removed from the area;
- Verifying that the controls are in neutral; and,
- Removing the lockout devices and re-energizing the machine or equipment.

The SSHO will inform outside contractors of the lockout-tagout procedures in place at the site, and conduct periodic inspections of the energy control procedure at least annually to ensure compliance with 29 CFR 1910.147.

5.3.3 Shift Changes

During shift changes, any machines or pieces of equipment that are locked out or tagged out will be reviewed together by all authorized and affected employees, and the orderly transfer of lockout or tagout device protection between off-going and oncoming employees will be implemented. At no time during a shift change may authorized or affected employees attempt to energize the machine or piece of equipment that is under lockout-tagout.

5.3.4 Multiple Individuals

When multiple individuals are performing the service or maintenance work:

- Each individual must use their personal lock and tag on the location;
- All tags must have that individual’s name, company name, identification of source, and contact information; and,
- No one is allowed to remove another individual’s lock or tag.

5.4 Chemical Hazards

Chemical hazards associated with the ISTR application at the site include the potential for the exposure of site personnel to contaminants by inhalation, absorption, or ingestion. Exposure to chemical hazards and toxic substances will be controlled through compliance with the requirements of 29 CFR 1910 Subpart Z and 29 CFR 1910.120 and by adhering to exposure limits published by such organizations as the United States National Institute for Occupational Safety and Health (NIOSH) and the American Conference of Government Industrial Hygienists (ACGIH). Appendix C – Chemical Information and Safety Data Sheets includes Safety Data Sheets (SDSs) for chemicals that may be used during the construction and operation of the ISTR system, and OSHA Occupational Chemical Database (OCD) reports for potential contaminants known or suspected of being present at the site, as identified by AECOM (2019). These documents include physical properties, health hazards, exposure limits, personal protection, and emergency response information for the potential chemicals of concern.

5.4.1 Permissible Exposure Limits

At no time shall the exposure of site personnel to air contaminants exceed the regulatory Permissible Exposure Limits (PELs) for substances preceded by the letter "C" (i.e., Ceiling Values). If instantaneous monitoring is not feasible, the ceiling shall be assessed as a 15-minute time weighted average exposure. For other substances (i.e., those *not* preceded by the letter "C"), exposures of site personnel to air contaminants shall not exceed the regulatory 8-hour Time Weighted Average (TWA) PEL given for that substance in any 8-hour work shift of a 40-hour work week. Furthermore, exposure to substances with published Short-Term Exposure Limits (STELs) shall not exceed the STEL as averaged over any 15 minute period.

5.4.2 Recommended Exposure Limits and Threshold Limit Values

NIOSH Recommended Exposure Limits (RELs) are not regulatory values, but will be consulted and used as guidance for the protection of site personnel at this project. The Statement of Work (SOW) also requires that the most current version of the American Conference of Governmental Industrial Hygienists (ACGIH) threshold limit values (TLV) be referenced. All site personnel will adhere to the lowest published worker exposure limit. In general, when there is discrepancy between OSHA PELs, NIOSH RELs, and ACGIH TLVs, the lower concentration will be adopted when determining the level of protection required. NIOSH Immediately Dangerous to Life or Health (IDLH) concentrations will also be observed and may at no time be exceeded.

5.4.3 Mitigation of Chemical Hazards

Direct-reading instruments (e.g., PID, FID, or four-gas monitor (carbon monoxide, lower explosive limit (LEL), hydrogen sulfide, oxygen), as appropriate) will be used to monitor inhalation hazards to site personnel (Section 7). Administrative and engineering controls will be used as the primary means to achieve compliance with the exposure limits presented in Appendix C – Chemical Information and Safety Data Sheets. Examples of these include the use of ventilation or fans, standing upwind of a chemical source, and designing extraction and treatment system components to be under vacuum, where possible. If these controls alone cannot mitigate exposure to below regulatory values, PPE will be used to control the chemical hazards in accordance with the information in Appendix C – Chemical Information and Safety Data Sheets. Absorption and ingestion hazards will be controlled through contact avoidance and the use of PPE. **Table 6** provides a summary of chemicals that will be used on site and the level of PPE they require. The brands of chemicals used on site may not be the same as those listed. In the case of a different brand being used, the appropriate SDS should be reviewed. Exhaust from drill rigs or other vehicles operating indoors must be rerouted outdoors or otherwise managed to avoid exposure.

Table 6: PPE for chemicals commonly used on site

Chemical	PPE Level Required under Normal Handling Conditions
Acetone	Level D
Activated Carbon	Level D
Alconox	Level D
Analytix AN-450FG	Level D

Analytix AP-9525	Level D
Analytix AP- 95030	Level D
Anti-Sieze	Level D
AQUACAR™ GA 15	Level C
AQUACAR™ GA 45	Level C
Diesel Fuel	Level D
Dolph ER-41	Level C
DOWSIL™ Contractors Concrete Sealant	Level D
GE5000 Silicone Rubber Sealant	Level D
Gorilla Glue	Level D
HDX Chlorinating Granules	Level D
HDX Pool Muratic Acid	Level D
HDX Super Shock	Level D
HOLEPLUG 3/8	Level D
HS-200 Organoclay Media	Level D
HS-270 Organoclay Anthracite Media	Level D
IR All Season Select Lubricant	Level D
Isobutylene Gas	Level D
Isopropyl Alcohol Wipes	Level D
Kock'er Loose Penetrating Solvent	Level D
Loctite Epoxy	Modified Level D
Poctite PTFE Thread Sealant	Modified Level D
Marking Paint (Solvent Based)	Modified Level D
Rotoroil 8000 F2	Level C
Noalox Anti-Oxidant	Level D
Odorless Mineral Spirits	Modified Level D
Portland Cement	Modified Level D
RV/Waterline Antifreeze	Level D
PVC Cement	Modified Level D
PVC Primer	Modified Level D
RYDLYME	Level D
SAK Concrete Glue	Modified Level D
Silica Sand	Modified Level D
STL Thread Compound	Level D
SuperTech Antifreeze	Level D

The OSHA OCD reports in Appendix C – Chemical Information and Safety Data Sheets also contain spill response, chemical reactivity, firefighting, and first aid information. To mitigate hazards such as explosion, fire, or violent chemical reaction, the associated guidance in these reports should be followed. If combustible vapors are present, regular monitoring with a Lower Explosive Limit (LEL) meter will also be implemented. If the concentration of combustible vapors in air at any time exceeds 10% of the LEL, corrective measures must be taken immediately.

5.5 Heat Stress

Heat stress occurs when the human body cannot regulate itself to maintain a normal temperature because of excessive heat, and can lead to heat stroke or death. It can pose a hazard to site personnel during periods of hotter weather, especially when PPE is used that inhibits the dissipation of heat and moisture from the body. Personnel must be familiar with the symptoms of heat stress, first aid, and measures for its prevention.

5.5.1 Heat-Related Illnesses

Heat-related illnesses, symptoms, and first aid measures include:

- *Heat Rash* – Mild red rash or clusters of bumps on the skin, especially in areas in contact with PPE, such as the neck, upper chest, and in folds of skin. It is the mildest of the heat-related illnesses. First aid may include modifying work schedules to decrease the amount of time in PPE, and moving the victim to a cooler, less humid environment.
- *Heat Cramps* – Acute, painful muscle spasms, usually in the abdomen and extremities, caused by perspiration that is not offset by fluid intake. First aid may include moving the victim to a cooler less humid environment, having them drink water every fifteen minutes until symptoms subside, and waiting a few hours before returning to work. A physician will be consulted if symptoms continue.
- *Heat Exhaustion* – Extreme weakness or exhaustion as a result of the loss of fluids from the body, with symptoms such as cool, moist skin, heavy perspiration, headache, nausea, thirst, irritability, and rapid heat rate. It is more severe than heat cramps. First aid may include having the worker lie down in a cooler air-conditioned environment, loosening or removing clothing, and having them drink water every fifteen minutes until symptoms subside. If symptoms do not subside within sixty minutes, seek emergency medical attention. The victim may not perform more work that day.
- *Heat Stroke* – Confusion, fainting, seizures, excessive sweating, red, hot, dry skin, very high body temperature, and rapid heart rate. Emergency services must be called immediately in the case of heat stroke, and the victim must be cooled down immediately while waiting for emergency services. Lie the worker down in a cooler air-conditioned environment, loosen or remove clothing, soak the victim in cold water, apply ice packs or cool compresses, apply fans, and provide drinking water as soon as possible.

5.5.2 Heat Index and Weather Monitoring

The SSHO will review the weather forecast at the start of each day, and determine if there is a risk of heat stress using the heat index (Figure 4**:** Heat index chart (NWS, 2018), Table 7**:** Heat index and risk of heat stress (OSHA, 2017)). Note that full sunshine can increase

heat index values up to 15°F, and that strenuous work or the use of PPE can also increase the risk of heat stress. If the heat index exceeds 80°F, precautions must be taken to mitigate the hazards associated with heat stress, such as scheduling more strenuous tasks during the cooler parts of the day, or modifying work/rest schedules for tasks that require increased levels of PPE. If the heat index exceeds 91°F, awareness must be heightened and precautions must be reinforced.

Access to shade must also be provided to site personnel, where they may remain for at least 5 minutes during a recovery period. Air-conditioned vehicles and areas near the job trailer will serve as shade locations, provided that suitable seating is available. The use of sunscreen while performing tasks outdoors is also recommended.

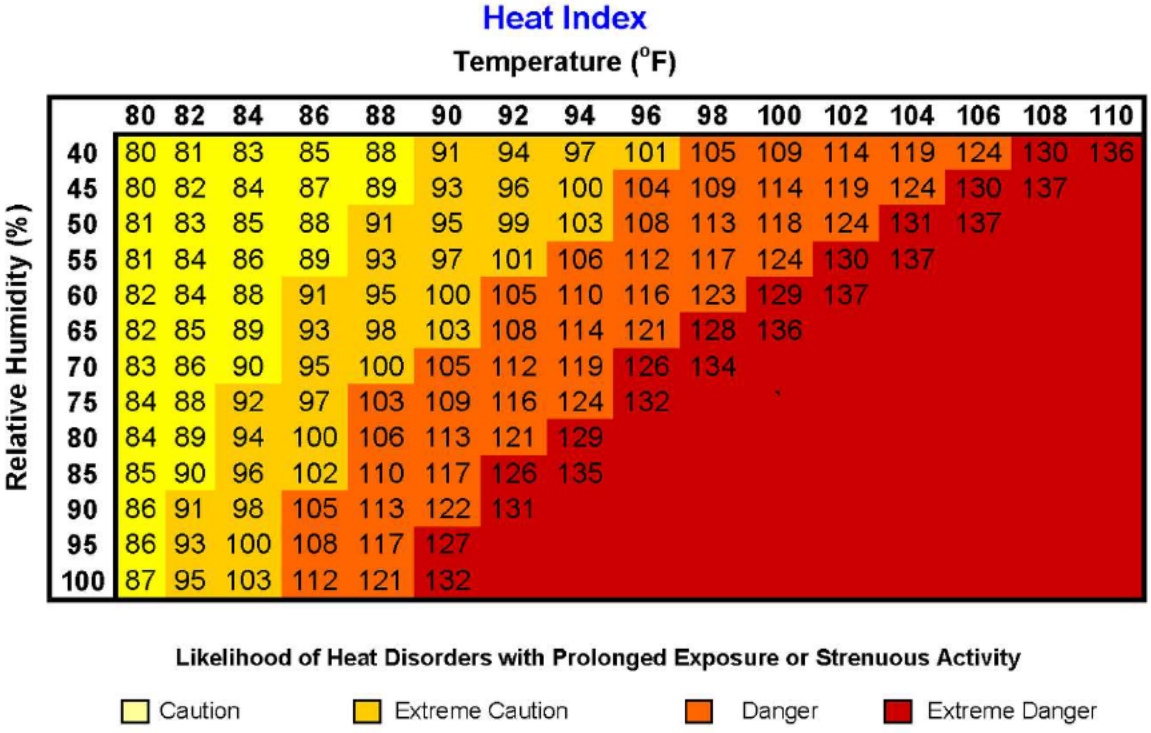

Figure 4: Heat index chart (NWS, 2018)

Table 7: Heat index and risk of heat stress (OSHA, 2017)

Heat Index	Risk Level	Protective Measures
Less than 91°F	Lower (Caution)	Basic heat safety and planning
91°F to 103°F	Moderate	Implement precautions and heighten awareness
103°F to 115°F	High	Additional precautions to protect workers
Greater than 115°F	Very High to Extreme	Triggers even more aggressive protective measures

5.5.3 Heat Stress Mitigation

The SSHO and site personnel should work together to determine work/rest schedules and monitor each other for symptoms of heat-related illnesses. Any individual factors or pre-existing medical conditions should be communicated to the SSHO. ACGIH screening

criteria can be used to determine if a heat stress situation may exist for a given work/rest schedule (Table 8: Threshold Limit Values for heat stress exposure (OSHA, 2017).). If needed at a later date, physiological monitoring may be used to evaluate heat stress on project personnel (e.g., if a person's heart rate is greater than 110 beats per minute at the beginning of a rest period, shorten the work period by one third). See NIOSH/OSHA/USCG/EPA (1985) for details on physiological monitoring.

If the heat index exceeds 80°F, personnel not used to hot weather conditions will be acclimatized over a 5 day period by starting with a 50% workload, and progressively increasing by 10% per day, during which they will be monitored for signs of heat stress by the SSHO. Full acclimatization may take up to 2 or 3 weeks.

Table 8: Threshold Limit Values for heat stress exposure (OSHA, 2017).

% Work	Workload			
	Light	Moderate	Heavy	Very Heavy
75 to 100%	87.8°F (31.0°C)	82.4°F (28.0°C)	N/A	N/A
50 to 75%	87.8°F (31.0°C)	84.2°F (29.0°C)	81.5°F (27.5°C)	N/A
25 to 50%	89.6°F (32.0°C)	86.0°F (30.0°C)	84.2°F (29.0°C)	82.4°F (28.0°C)
0 to 25%	90.5°F (32.5°C)	88.7°F (31.5°C)	86.9°F (30.5°C)	86.0°F (30.0°C)

5.5.4 Drinking Water

Site personnel will be provided with a sufficient quantity of cool potable water (i.e., 50 to 60°F) and encouraged to drink up to 4 times per hour in hotter weather conditions (i.e., heat index exceeds 80°F). Generally, this will consist of individual water bottles that are placed in coolers. Non-potable water sources may not be used for drinking water. The SSHO is designated with monitoring the quantity and temperature of the potable water, and ensuring there is sufficient drinking water available for site personnel at all times. Site personnel are also encouraged to limit caffeine and avoid alcohol.

5.6 Cold Stress

Cold stress occurs when exposure to a cold environment drives down the skin temperature and eventually the internal temperature of the human body, and can lead to illness, permanent injury, or death. Personnel must be familiar with the symptoms of cold stress, first aid, and measures for its prevention.

5.6.1 Cold-Related Illnesses

Cold-related illnesses, symptoms, and first aid measures include:

- *Hypothermia* – Body heat is lost faster than it can be replaced and the normal body temperature (98.6°F) drops to less than 95°F. Symptoms of mild hypothermia include shivering, while symptoms of moderate to severe hypothermia include the stopping of shivering, loss of coordination, confusion, inability to walk or stand, dilated pupils, slowing of the heart rate and breath, loss of consciousness. Emergency services must be called immediately in the case of moderate to severe hypothermia. First aid may include moving the victim to a warm dry area, wrapping them in blankets (including head and neck, but not face), applying warm bottles or packs, and giving them warm sweetened drinks to increase body temperature (only if they are conscious). Never attempt to give a drink to an unconscious victim.

- *Frost Bite* – Skin and tissues freeze, which can cause permanent damage and in severe cases require amputation. Symptoms of frost bite include reddened skin that develops gray/white patches in the fingers, toes, nose, or ear lobes; tingling, aching, a loss of feeling, firm/hard; and blisters in affected areas. Risk increases among people not properly dressed for cold temperatures and those with reduced blood circulation. Medical attention must be sought immediately. First aid includes following the recommendations for hypothermia, and protecting the frostbitten area with loose dry cloth until medical help arrives. Do not rub the affected area, and do not attempt to rewarm the affected area prior to receiving medical attention, as more tissue damage can occur if it freezes again.
- *Trench Foot* – Non-freezing injury of the feet caused by prolonged exposure to wet and cold conditions, which can occur in temperatures as high as 60°F if the feet are constantly wet. Symptoms include reddening skin, tingling, pain, swelling, leg cramps, numbness, and blisters. First aid includes seeking medical attention, removing wet footwear and socks, drying the feet, keeping the affected feet elevated, and avoiding standing or walking.

5.6.2 Wind Chill and Weather Monitoring

Wind chill is used to describe the rate of heat loss from the human body, resulting from the combined effect of low air temperature, and wind speed. The SSHO will review the weather forecast at the start of each day, and determine if there is a risk of cold stress using the wind chill chart (Figure 5**:** Wind chill chart (NWS, 2018)). If the wind chill decreases below 36°F, precautions must be taken to mitigate hazards associated with cold stress, such as scheduling work for the warmest part of the day, modifying work/rest schedules to allow personnel to warm up throughout the shift, or using engineering controls such as radiant heaters.

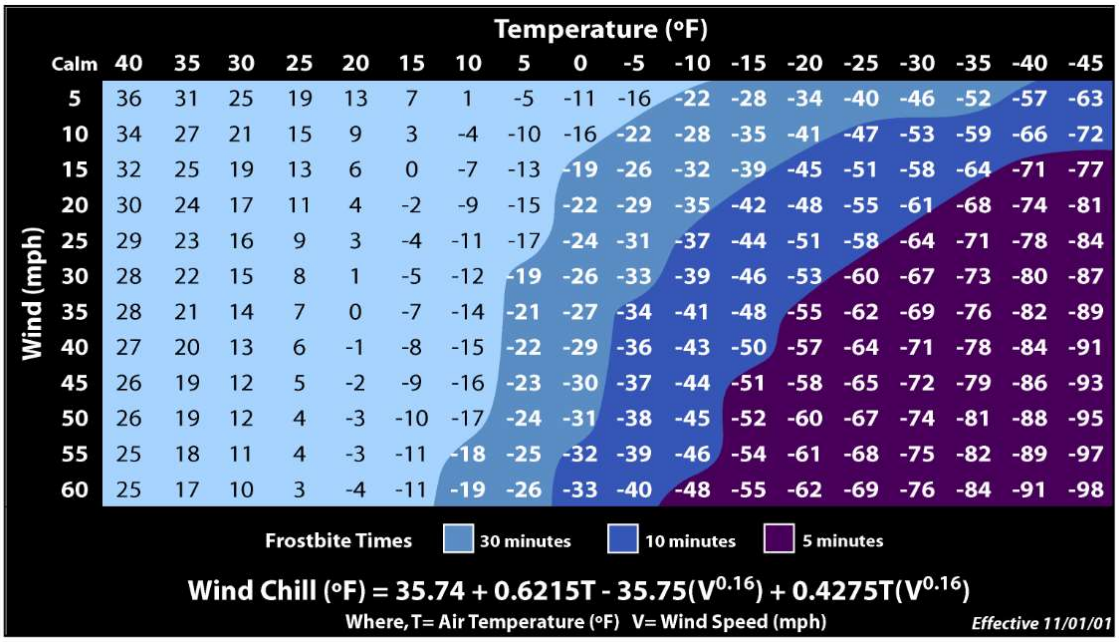

Figure 5: Wind chill chart (NWS, 2018)

5.6.3 Cold Stress Mitigation

The SSHO and site personnel should work together to determine work/warm-up schedules and monitor each other for symptoms of cold-related illnesses. Any individual factors or pre-existing medical conditions should be communicated to the SSHO. ACGIH screening criteria can be used to determine if a cold stress situation may exist for a given work/rest schedule (Table 9: Work/warm-up schedule for a 4 hour shift (OSHA, 2017).). Access to a warm, dry area must also be provided to site personnel, such as a heated vehicle or job trailer, provided that suitable seating is available. Site personnel must also prepare for colder weather by dressing appropriately, keeping body parts as dry as possible, and using PPE that provides adequate protection to the cold. Personnel should also have spare clothing on hand in case of wet conditions, or to provide additional layering if temperatures decrease.

Table 9: Work/warm-up schedule for a 4 hour shift (OSHA, 2017).

<table>
<tr><th colspan="2">Air Temperature</th><th colspan="2">No Wind</th><th colspan="2">5 mph Wind</th><th colspan="2">10 mph Wind</th><th colspan="2">15 mph Wind</th><th colspan="2">20 mph Wind</th></tr>
<tr><th>°C</th><th>°F</th><th>Work</th><th>Rests</th><th>Work</th><th>Rests</th><th>Work</th><th>Rests</th><th>Work</th><th>Rests</th><th>Work</th><th>Rests</th></tr>
<tr><td>-26 to -28</td><td>-15 to -19</td><td colspan="2">(Normal Breaks) 1</td><td colspan="2">(Normal Breaks) 1</td><td>75 min</td><td>2</td><td>55 min</td><td>3</td><td>40 min</td><td>4</td></tr>
<tr><td>-29 to -31</td><td>-20 to -24</td><td colspan="2">(Normal Breaks) 1</td><td>75 min</td><td>2</td><td>55 min</td><td>3</td><td>40 min</td><td>4</td><td>30 min</td><td>5</td></tr>
<tr><td>-32 to -34</td><td>-25 to -29</td><td>75 min</td><td>2</td><td>55 min</td><td>3</td><td>40 min</td><td>4</td><td>30 min</td><td>5</td><td colspan="2" rowspan="4">Non-emergency work should cease</td></tr>
<tr><td>-35 to -37</td><td>-30 to -34</td><td>55 min</td><td>3</td><td>40 min</td><td>4</td><td>30 min</td><td>5</td><td colspan="2" rowspan="3">Non-emergency work should cease</td></tr>
<tr><td>-38 to -39</td><td>-35 to -39</td><td>40 min</td><td>4</td><td>30 min</td><td>5</td><td colspan="2" rowspan="3">Non-emergency work should cease</td></tr>
<tr><td>-40 to -42</td><td>-40 to -44</td><td>30 min</td><td>5</td><td colspan="2" rowspan="2">Non-emergency work should cease</td></tr>
<tr><td>-43 & below</td><td>-45 & below</td><td colspan="2">Non-emergency work should cease</td></tr>
</table>

5.7 Burn Hazards

SEE ISTR generates steam, vapors, and liquids that may be in excess of 212°F, and consequently, contact avoidance or thermal PPE must be used to mitigate burn hazards. Equipment may only to be handled when temperatures are equal to or less than 122°F, or with thermal PPE of up to temperatures of 248°F. Signage or temperature gauges will be installed on many of the components that are anticipated to be hotter than 122°F, but as a general precaution, site personnel should assume that all wellheads, hoses, fittings, piping, and process treatment equipment are at temperatures in excess of 212°F. Piping insulation will be used throughout the wellfield on steam conveyance piping. Piping insulation will not be used throughout the wellfield on extraction piping to facilitate fluid cooling prior to treatment. As such, a temperature gun should be used prior to performing maintenance or repair work on these and other components that might be hot. If a steam generator or pressure washer is used for treatment or decontamination, personnel should also practice contact avoidance and stand out of the line of fire while the equipment is operating.

During hot groundwater sampling, if groundwater temperatures are close to boiling point, the reduction of hydrostatic pressure within the well can cause the boiling point of groundwater to decrease. If this decrease in boiling point causes additional groundwater to boil off within the well, the hydrostatic pressure will decrease further, potentially running away into a steam geyser. Prior to sampling, subsurface temperatures must be evaluated, and a shutdown period may be required. During sampling, appropriate thermal and splash protection PPE must be donned, and cold water should be kept on hand to quench the well if necessary. Additional information is presented in the JSA procedures for Hot Groundwater Sampling and Hot Soil Sampling (Appendix B – Job Safety Analysis (JSA) Procedures).

Burns may also occur due to an electric shock (Section 5.2.2), arc flash (Section 5.2.4), or chemical exposure (Section 5.4), whose hazard controls have been discussed previously. The use of sunscreen while performing tasks outdoors is also recommended to mitigate burns from sun exposure.

5.8 Pressure Hazards

The steam boiler and piping network, as well as many of the treatment system process vessels, such as bag filter housings, media filtration vessels, water conveyance lines, and compressed air systems, may be operating at pressures of up to 150 psi. Exposure to fluids or air under pressure may cause serious injury or death. Furthermore, if the vessel itself ruptures, there is the possibility for fragmentation damage and injury, or blast effects due to sudden expansion of the pressurized fluid. Leakage may also lead to suffocation, poisoning, fire, explosion, and chemical or thermal burns, depending on the nature of the contents under pressure.

Personnel should follow only approved procedures, practice contact avoidance, and stand out of the line of fire when performing maintenance tasks that may involve pressure hazards, such as replacing bag filters, draining media filtration vessels, or using steam pressure washers to decontaminate equipment. Pressure gauges installed on such components should be observed at all times, and replaced immediately if deemed faulty or damaged. If any intrusive work needs to be performed on components under pressure, they should be isolated (e.g., using upstream and downstream valves, shutting off power to the associated pumps), and bled of any stored energy. Personnel should adhere to any lockout-tagout procedures necessary to control and dissipate sources of hazardous energy (e.g., Section 5.3). The system will also be leak tested prior to startup.

5.8.1 Hoses and Lines

Hoses and lines under pressure, such as bag filter or media vessel bleeder hoses, must be restrained so they do not cause whipping under pressure. Loose fittings on whipping lines can cause serious injury or death. Whipping hoses or lines should never be handled, and instead should be stopped by turning off the controlling valve. Also, if a water hammer is detected, it can lead to a line rupture, and should be controlled by throttling the controlling valve or modifying the design of the associated plumbing.

5.8.2 Compressed Air and Gas Cylinders

Compressed air delivery systems may be operating at pressures of up to 150 pounds per square inch (psi). The use of air receivers will comply with the requirements of all applicable regulations, including the installation and use of pressure gauges, condensate drains, and safety valves. Compressed air delivery systems should be routinely inspected for wear or damage, and immediately taken out of service if these are detected.

Compressed air will not be used for cleaning purposes except where reduced to less than 30 psi and then only with effective chip guarding (such as safety glasses) and PPE. Under no circumstance may personnel use compressed air to clean themselves or their clothing while it is being worn.

Isobutylene gas cylinders, used for PID calibration, nitrogen cylinders, used to keep IT-DSP™ wells dry, and other gas cylinders may also be present at the site. The use of compressed gasses will comply with the requirements of 29 CFR 1910.101, 29 CFR 1910.253(b)(2)(ii), 29 CFR 1926.350, and other relevant sections. Generally, compressed gas cylinders must: (i) be secured in an upright position away from work areas; (ii) only be connected to regulators and equipment designed for the gas in the cylinder; (iii) be equipped with valve protection caps; (iv) be located at least 20 ft from highly combustible materials; and, (v) not be kept in unventilated areas.

5.8.3 Steam Boilers

The installation and use of natural gas steam boilers must comply with the requirements of the American Society of Mechanical Engineers (ASME) *Boiler and Pressure Vessel Code*, and applicable regulations local to the jurisdiction of the project. Wiring of steam boilers must comply with the requirements of the NEC and any other relevant national, provincial/state, and local regulations. Personnel in the vicinity of steam boilers must be familiar with emergency procedures detailed in its operations manual.

5.8.4 Pressure Washers

Pressure washer use will comply with the manufacturer's operations manual and/or rental company's instructions. Pressure washers will be inspected before use, with particular attention paid to hoses and fittings. Safety procedures applicable to Hand and Power Tools (Section 5.13), and Hoses and Lines (Section 5.8.1), also apply to pressure washers.

5.9 Slips, Trips, and Falls

ISTR projects often include aboveground wires, hoses, piping, and other equipment within a small footprint. This can increase the risk of slip, trip and fall hazards, especially in higher traffic areas. Personnel should be aware of slip, trip, and fall hazards in their vicinity, and should observe the following general guidelines:

- Good housekeeping must be maintained at all times in all project work areas;
    - Tools, equipment, and materials should be stored in an orderly manner;
    - Specific areas should be designated for specific storage purposes;
    - Debris or trash should be collected and removed at regular intervals;
    - Any spills must be immediately contained and cleaned up;
- Common paths of travel, exits, ladders, stairways, scaffolding, and access to energy equipment should be established and kept free from obstructions;
- Slip-resistant surfaces or devices should be used where needed; and,
- Site activities should be performed during daylight hours whenever possible.

Ice and snow may also exacerbate existing slip, trip, and fall hazards, and extra precautions such as safety boots that provide additional traction are recommended.

5.9.1 Fall Protection

Fall hazards may be encountered during the installation, operation, or demobilization of the remediation equipment, and procedures to mitigate these hazards must comply with the requirements of 29 CFR 1926 Subpart M. Fall protection is required for personnel on an unprotected side or edge which is 6 feet or more above a lower level, and will generally consist of using guardrail systems for routine tasks (e.g., when climbing stairs on the side of a frac tank) and personal fall arrest systems (PFAS) for non-routine tasks (e.g., when performing the interconnection of overhead vapor piping). Guardrails will have a vertical height of 42 inches and an intermediate member height of 21 inches. Hole covers will be used during drilling where there are unfinished holes more than 2 inches in their least dimension. PFAS and their use must comply with the requirements of 29 CFR 1926.502(d). PFAS should be inspected prior to each use.

The only routine task anticipated to require fall protection is activated carbon changeouts, for which an aerial lift will be used, or suitable anchor point identified.

5.9.2 Ladder Use

Ladder use will comply with the requirements of 29 CFR 1926.1053. Personnel should observe the following general guidelines:

- Ladders should be inspected prior to use, and if it is damaged, removed from service and tagged until it is repaired or discarded;
- Ladders should not be used in the vicinity of electrical hazards;
- Three-point contact should be maintained and the ladder should always be faced;
- Ladders should only be used on stable and level surfaces, angled with its base at a quarter distance of the working length of the ladder; and,
- Ladder load ratings should never be exceeded and personnel should never stand on the top three rungs of the ladder.

5.10 Confined Space Entry

No confined space entry is anticipated as part of the ISTR application. If it is determined to be needed at a later date, its procedures will comply with the requirements of relevant national, provincial/state, and local regulations. Typically, this includes preparing a plan outlining hazardous atmosphere monitoring, required PPE, entry procedures, backup personnel, and retrieval or exit procedures in the case someone is injured while inside the confined space. If confined spaces such as vessels or tanks that require entry are brought on site, Mc^2 must be notified and signage will be required. Subcontractors performing the confined space entry must provide Mc^2 with copies of their entry permit, atmosphere testing results, equipment calibration logs, and certification for entry, as well as provide for their own monitoring.

5.11 Utility Hazards

5.11.1 Subsurface Utilities

The location of all subsurface utilities in the work area must be determined prior to performing any intrusive activities, through a combination of methods such as:

- Using a “Call Before You Dig” service;
- Clearing with hand tools or soft digging methods;
- Using geophysical methods through a private utility locate service;

- Reviewing as-built drawings from public and private sources; or,
- Interviewing knowledgeable personnel.

ISTR creates elevated subsurface temperatures of up to approximately 212°F, which may cause subsurface utilities to fail (e.g., plastic pipes or conduits). The locations and temperature limits of all subsurface utilities in the heated volume should be determined prior to startup, and either (i) abandoned, (ii) temporarily bypassed, or (iii) protected with a quench line (i.e., a co-located cold-water injection and temperature monitoring system). Furthermore, electrical potential may be induced onto electrically conductive utility materials, which may need to be accounted for during system acceptance testing.

5.11.2 Overhead Utilities

Drilling rigs, cranes, and other equipment operating near any overhead power lines will comply with the requirements of 29 CFR 1926.1408, including the minimum clearance distances from overhead power lines presented in Table 10. Additional overhead line requirements include:

- Review overhead line voltage and height;
- A dedicated spotter;
- Overhead line signage;
- A non-conductive tag line; and
- Obtaining exception if working within 10 to 20 ft of an overhead line up to 350 kV.

Note that particular facilities or clients may have more stringent requirements.

Table 10: Minimum overhead clearance distances

Voltage (nominal, AC)	Minimum Clearance (ft)
Up to 50 kV	10
Over 50 to 200 kV	15
Over 200 to 350 kV	20
Over 350 to 500 kV	25
Over 500 to 750 kV	35
Over 750 to 1,000 kV	45
Over 1,000 kV	As established by utility

5.12 Excavations and Trenching

Excavations are defined as any man-made cut, cavity, trench, or depression in the earth's surface formed by earth removal, and will be performed in accordance with the requirements of 29 CFR 1926 Subpart P. Excavations are anticipated during the installation of the subsurface ISTR components. Trenching, which defined as a horizontal or inclined way or opening where the length is greater than its width and greater than or equal to its depth, starts at ground level and extends below the surface of the ground, and is open to the surface along its length. Trenching procedures will comply with the requirements of 29 CFR 1926 Subpart P.

5.12.1 General Hazard Controls

The primary hazard involved in excavation and trenching is a cave-in or collapse, which is the most likely hazard to cause a worker injury or fatality. Other hazards include falls, falling loads, hazardous atmospheres, and incidents involving mobile equipment. The zone of influence of an excavation should be considered. The zone of influence will depend on the ground conditions. Site personnel are not permitted to enter an unprotected excavation or trench. General hazard controls include:

- Keeping heavy equipment away from excavation or trench edges;
- Keeping surcharge loads at least 2 ft from the zone of influence of excavation or trench edges;
- Knowing where underground utilities are located;
- Testing for low oxygen, hazardous fumes and toxic gases;
- Inspecting excavations or trenches at the start of each shift;
- Inspecting excavations or trenches following a rainstorm; and,
- Not working under raised loads.

Prior to performing any excavation activity, the location of any subsurface utilities must be determined through a “Call Before You Dig” service, and cleared using hand tools or vacuum excavation within 3 feet of the marked location. An active “Call Before You Dig” ticket must be opened at least 3 days but no more than 2 weeks prior to performing any excavation work, even if the excavation is located on private property.

5.12.2 Protective Systems and Hazardous Atmospheres

Excavations 5 feet in depth or greater where personnel may enter, require a protective system of sloping and/or shoring. The protective system in place must be compliant with the requirements of 29 CFR 1926.652. The work area must also be secured from unauthorized access. Trenches 20 feet in depth or greater require this system to be designed by a registered professional engineer. In general, excavations that use sloped protective systems where personnel may enter may not be angled steeper than 45 degrees, unless designed by a competent person and certified in writing. Access and egress (e.g., ladders, steps, and ramps) is also required in trenches greater than 4 feet deep within 25 feet of all workers.

In excavations where oxygen deficient (<19.5% oxygen) or other hazardous atmospheres may exist, such as an excavation close to a hazardous substance or in a tunnel, the atmosphere must be tested, and proper PPE (ie. respiratory protection) or ventilation must be provided, to ensure the atmosphere remains safe for any personnel who may enter the excavation. Ventilation systems should be designed by a competent person to provide safe levels through the entire excavation. Emergency rescue equipment should be readily available where hazardous atmospheric conditions exist. Personnel may not work in excavations in which water is accumulating, unless precautions are taken to protect against water accumulation hazards. Excavations that may impact the stability of adjacent structures should also have a structural support system installed, unless otherwise determined by a registered professional engineer.

5.13 Hand and Power Tools

Hand and power tools will be used throughout the ISTR implementation for various installation and maintenance tasks. Their use must comply with the requirements of 29 CFR 1910 Subpart F and 29 CFR 1926 Subpart I. Personnel using hand and power tools should have sufficient training in how to safely inspect, handle, operate, and maintain the

tools they will be using. Hazards associated with the use of hand and power tools often stem from misuse and improper maintenance. When using cutting tools, personnel must wear cut-resistant work gloves and stay out of the line of fire to minimize the potential for laceration.

General guidelines for the safe tool use include:

- Keeping all tools in good condition with regular maintenance;
- Using the right tool for the job;
- Examining each tool for damage before use and not using damaged tools;
- Operating tools according to the manufacturers' instructions; and,
- Providing and correctly using the right PPE.

5.13.1 Hand Tools

Hand tools are manually powered and include hammers, screwdrivers, wrenches, scissors, and knives. Open bladed knives are not permitted on site. General guidelines for the safe use of hand tools include:

- When using safety knives, saw blades or other tools, direct the tool away from yourself, walkways, and other employees;
- Sharp tools such as knives and saws must be sharpened on a regular basis. Dull tools can cause more hazards than sharp ones;
- Cracked saw blades must be removed from service;
- Do not use a wrench when jaws are sprung to the point the slippage may occur;
- Impact tools with mushroomed heads should not be used because the head may shatter on impact, sending flying sharp objects in the air; and,
- Iron and steel hand tools may produce sparks that can create an ignition source when in close proximity to flammable substances. When applicable, spark-resistant tools made of non-ferrous materials must be used.

5.13.2 Power Tools

The various types of power tools that might be used at the site are determined by their power source, including:

- Electric;
- Pneumatic;
- Liquid fueled;
- Hydraulic; and,
- Power-actuated.

General guidelines for the safe use of power tools include:

- Never carrying a tool by the cord or hose;
- Never yanking the cord or the hose to disconnect it from the receptacle;
- Keeping cords and hoses away from heat, oil, and sharp edges;
- Disconnecting tools when not using them, before servicing and cleaning them, and when changing accessories such as blades, bits, and cutters;
- Keeping people not involved with the work at a safe distance from the work area;
- Securing work with clamps or a vise, freeing both hands to operate the tool;
- Avoiding accidental starting, and not holding fingers on the switch button while carrying a plugged-in tool;
- Maintaining tools with care, keeping them sharp and clean for best performance;

- Following manufacturers' guidelines for lubricating and changing accessories;
- Maintaining good footing and balance when operating power tools;
- Wearing proper apparel for the task and avoiding loose clothing, ties, or jewelry that can become caught in moving parts; and,
- Removing damaged portable electric tools from use and tagging them.

Additional precautions for the safe use of the various types of power tools listed above are presented in the *OSHA Hand and Power Tools Booklet* (OSHA, 2002). Personnel are encouraged to review these precautions prior to using power tools onsite.

5.13.3 Guards

Exposed moving parts of power tools such as belts, gears, shafts, flywheels, and chains can cause hazards and need to be safeguarded. Machine guards must be provided to protect the user and other people around from the following, as applicable:

- Point of operation;
- In-running nip points;
- Rotation parts; and,
- Flying chips and sparks.

Safety guards must never be removed or altered in anyway. Potable circular saws with a blade diameter greater than 2 inches must be protected with guards at all times. The entire blade must be covered by an upper guard, except where it makes contact with the material. When the tool is withdrawn from the material the lower guard must automatically return to covering the blade.

5.14 Ergonomics

Personnel that are exposed to lifting heavy items, bending, reaching overhead, pushing and pulling heavy loads, working in awkward body postures, and performing the same or similar tasks repetitively, are at increased risk of musculoskeletal disorders (MSDs). These can affect the muscles, nerves, blood vessels, ligaments, and tendons. Personnel will work together onsite to review tasks that may lead to poor ergonomics and implement strategies to reduce these hazards, including:

- Engineering controls, such as work station, tool, and equipment design;
- Work practices, such as proper lifting techniques, and keeping work areas clean;
- Administrative controls, such as worker rotation, more task variety, and increased rest breaks; and, if necessary,
- Personal protective equipment, such as knee pads, vibration gloves, and similar devices.

Generally, personnel should use mechanical means to perform manual tasks, such as lifting or pulling, wherever possible. Proper techniques should be observed when lifting or moving heavy objects, including:

- Use mechanical means, such as forklifts or pallet jacks, to transport heavy items;
- Avoid lifting loads heavier than 50 pounds – if unavoidable, use two or more people when lifting loads heavier than this;
- Maintain a neutral and straight spine alignment – usually bending at the knees, and not at the waist, will help maintain a neutral spine alignment;
- Carry materials in the "power zone", about mid-thigh to mid-chest, keeping elbows and the load closer to the body – stage materials at this height if possible;

- Avoid twisting, awkward positions, uneven loads, and pinch points;
- Use handholds or slings whenever possible for larger or bulky materials;
- Keep walking paths clear of trip hazards and debris; and,
- Order supplies in smaller quantities or break down loads prior to delivery.

5.15 Hearing Conservation

Tasks involving drilling, excavation, power tools, blowers, and other mechanical devices can lead to noise that exceeds permissible noise exposure levels levels outlined in 29 CFR 1910.95 (e.g., 90 dBA over an 8 hour period), which in turn can lead to (i) temporary hearing losses that return to normal after a rest period or (ii) permanent hearing losses with repeated exposures. Symptoms of overexposure to noise include a temporary threshold shift (e.g., muffled sounds after exposure) or tinnitus (e.g., ringing in the head), both of which can become permanent with repeated exposures. When there is a possibility for noise levels of 85 dBA or higher, site personnel will be required to wear hearing protection, such as earplugs or earmuffs, which has a sufficient noise reduction rating to reduce exposure to below permissible levels. Personnel that may be exposed to occupational noise levels of 85 dBA and above or a noise dose of 50% must participate in a hearing conservation program (Section 9.2).

5.16 Drilling Hazards

Personnel should be familiar with and adhere to any applicable JSA procedures provided by the drilling contractor. The drilling contractor must be licensed in the jurisdiction where the ISTR installation or other drilling activities are occurring, and must comply with any relevant federal, state, and local regulations (e.g., construction and abandonment guidelines, permitting requirements). Hazard controls related to drilling activities described elsewhere in this document may include:

- Chemical hazards from contaminants (Section 5.4);
- Chemical hazards from drill rig or vehicle exhaust (Section 5.4.3);
- Heat stress (Section 5.5) and cold stress (Section 5.6);
- Slips, trips, and falls (Section 5.9);
- Utility hazards (Section 5.11);
- Excavations and trenching (Section 5.12);
- Hand and power tools (Section 5.13);
- Ergonomics (Section 5.14);
- Hearing conservation (Section 5.15);
- Powered industrial trucks (Section 5.18);
- Hoisting and rigging (Section 5.19);
- Silicosis and dust control (Section 5.22); and,
- Hot soil sampling (Appendix B).

Additional hazards during drilling and subsurface installation activities are related to the general use of the drill rig. Accidents may occur if a drill rig is placed on soft or uneven terrain, or if it is not properly secured. Access to drilling locations must be inspected and determined to be safe prior to moving the rig into place. Rig mats may be used to minimize the risk of tipping or sinking in uneven terrain. Drilling personnel should also be aware of pinch points, especially during the hoisting of casing, and handle materials such that no part of any person's body is in "caught between" situation. If applicable, the drilling contractor should develop lockout-tagout procedures specific to the operation of their

equipment, only use “off-the-shelf” manufactured items during the performance of their scope, and adhere to guidelines detailed in the operations manual of their drill rig.

Drilling rigs and equipment must be inspected prior to use each day. All inspections must be documented and submitted to Mc² for recordkeeping. The drilling contractor is also responsible for developing emergency procedures associated with their scope of work and training other site personnel in these procedures. A fire extinguisher and first aid kit must be available throughout the entire drilling scope.

5.17 Vacuum Trucks

Personnel should be familiar with and adhere to any applicable JSA procedures provided by the vacuum truck contractor. The vacuum truck contractor must be licensed in the jurisdiction where the truck is operating, and must comply with any relevant federal, state, and local regulations (e.g., construction and abandonment guidelines, permitting requirements). Hazard controls related to vacuum truck operations described elsewhere in this document may include:

- Lockout Tagout Program (Section 5.3);
- Chemical Hazards from Contaminants (Section 5.4);
- Chemical Hazards from Drill Rig or Vehicle Exhaust (Section 5.4.3);
- Heat Stress (Section 5.5) and Cold Stress (Section 5.6);
- Hose and Lines (Section 5.8.1);
- Slips, Trips, and Falls (Section 5.9);
- Utility Hazards (Section 5.11);
- Hand and Power Tools (Section 5.13);
- Ergonomics (Section 5.14);
- Hearing Conservation (Section 5.15); and,
- Powered Industrial Trucks (Section 5.18).

Additional hazards during vacuum truck operations are related to the movement of the vacuum truck in tight quarters. Accidents may occur if a vacuum truck is placed on soft or uneven terrain, or if it is not properly secured. Access to operational locations must be inspected and determined to be safe prior to moving the truck into place. Vacuum truck hoses are heavy, yet may move unexpectedly due to sudden changes in vacuum and/or slugging of liquids. Vacuum trucks are typically quite noisy and pose a threat to operator hearing if inadequate protection is used. Additonally, applied vacuum may represent a source of energy requiring LOTO procedures. If applicable, the vacuum truck contractor should develop lockout-tagout procedures specific to the operation of their equipment, only use “off-the-shelf” manufactured items during the performance of their scope, and adhere to guidelines detailed in the operations manual of their equipment.

Vacuum trucks and associated equipment must be inspected prior to use each day. All inspections must be documented and submitted to Mc² for recordkeeping. The vacuum truck contractor is also responsible for developing emergency procedures associated with their scope of work and training other site personnel in these procedures. A fire extinguisher and first aid kit must be available throughout the entire onsite operations scope.

5.18 Powered Industrial Trucks

The use of powered industrial trucks, such as rough terrain forklifts (e.g., telehandlers), is anticipated during the installation, operation, and demobilization of the ISTR system, and

must comply with the requirements of 29 CFR 1910.178. Powered industrial trucks and skid steer loaders must be inspected prior to use each day and operated by trained personnel only. Inspection forms are provided in Appendix E – Site Safety Forms.

Generally, loads must be centered on the forks or bucket, as close as possible to the mast, and at the lowest position possible for travel, to minimize the potential for the truck tipping or the load falling. Trucks must never be overloaded. Spotters must be used when reversing or operating in conditions where the visibility of the driver may be limited. All personnel must keep a safe distance from operating powered industrial trucks, and may never walk under a load. Manufacturer recommendations and specifications must be followed at all times.

5.19 Hoisting and Rigging

Hoisting and rigging is anticipated during the installation and demobilization of the ISTR system, and will be performed in accordance with the requirements of 29 CFR 1910.79, 29 CFR 1910.180, 29 CFR 1926.251, and 29 CFR 1926.552. Subcontractors providing hoisting or rigging activities, including crane services and drilling contractors, must comply with all relevant federal, state, and local regulations. A competent person must be onsite during any lifting activities, and only qualified personnel may operate hoisting and rigging equipment.

Prior to lifting, the activities must be classified by the component person as (i) ordinary, (ii) critical, or (iii) pre-engineered. Operators must know the total weight and dimensions of the load, and use hoisting and rigging equipment capable of fulfilling the requirements of the lift without endangering any personnel or equipment. Equipment used for hoisting and rigging may not be modified from the manufacturer's specifications, and must be certified and inspected prior to each use. Any defective hoisting or rigging equipment must be removed immediately from service. All hoisting or rigging equipment must observe the clearance distances of Table 10**:** Minimum overhead clearance distances when working near energized power lines.

At no time may any person stand or pass under a suspended load during the lift. At the start of the lift, a trial lift will be performed to check the load for stability prior to hoisting. Tag lines may be used as necessary to control the load. Only a qualified signal person can provide direction to the operator, and all auxiliary personnel must stand clear of the lift area. Operators may never leave a load unattended. Rigging equipment must be an "off-the-shelf" manufactured item with a prescribed safe working load, and must not be kinked, rusted, or otherwise damaged. Lifts should not be attempted in excessively windy conditions.

5.20 Traffic Control

If necessary, the control of vehicle traffic should comply with any applicable transportation regulator guidelines, as well as any guidelines established onsite by the engineering consultant. Typical guidelines are presented in Figure 6**Error! Reference source not found.**.

5.21 Illumination

Site personnel will be provided with adequate lighting to safely complete their tasks, with minimum illumination intensities in accordance with the requirements of 29 CFR 1910.120(m). Personal headlamps should be used in lower light conditions. During response to upset condition at night, site personnel will rely on lighting placed on treatment

system equipment and personal headlamps. A backup electrical generator will be on site in case of disruption to main electrical source for lighting.

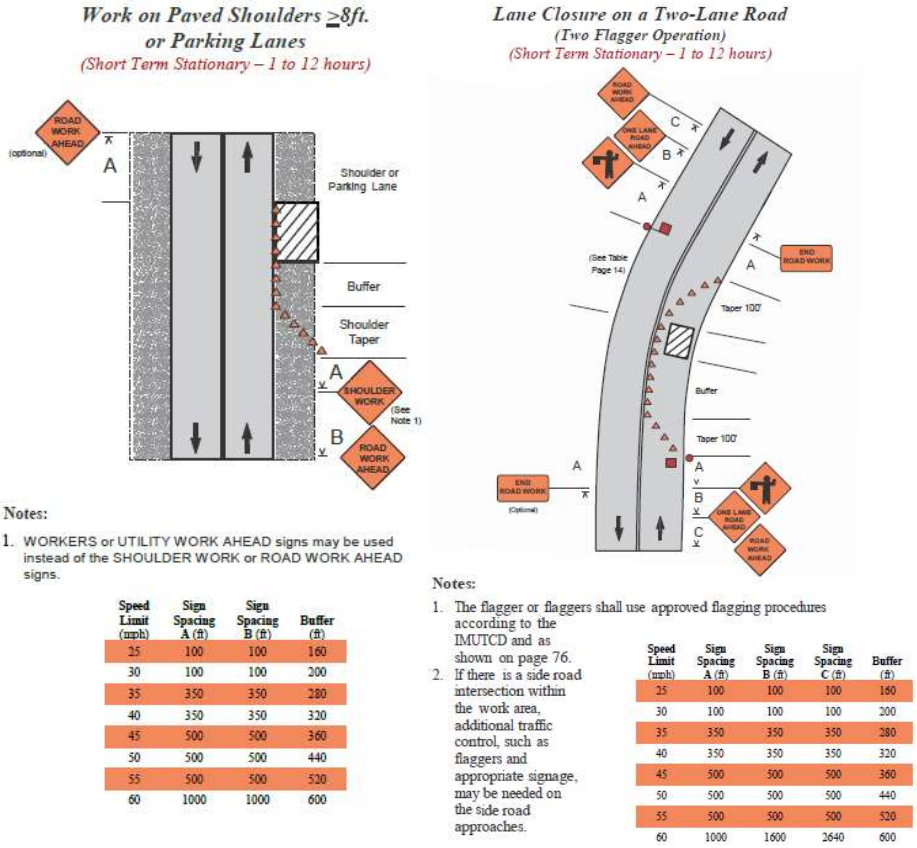

Figure 6: Example work zone traffic control guidelines from INDOT (2013)

5.22 Sanitation and Hygiene

Site personnel will have access to toilet and washing facilities in accordance with the requirements of 29 CFR 1910.120(n), that are located in areas where exposures are below PELs. An adequate supply of potable water will be provided in clearly labeled bottles. Any non-potable water sources must be labeled accordingly. Personnel must avoid cross contamination of potentially hazardous materials by implementing good hygiene practices, such as keeping hands away from the face, covering areas of broken skin, washing hands prior to eating, showering at the end of each shift, and segregating laundry.

5.23 Silicosis and Dust Control

Drilling, subsurface installation, and shotcrete use may lead to the potential for site personnel to be exposed to crystalline silica dust or cement dust. This exposure may lead to silicosis of the lungs, lung cancer, chronic obstructive pulmonary disease, and kidney disease. In addition to the sanding and grouting of the groundwater wells, other grinding, crushing, or cutting activities may also increase the risk of crystalline silica dust exposure. Furthermore, existing dust conditions at the site may be exacerbated by the operation of powered industrial trucks, skid steers, drill rigs, cranes, or other equipment.

The OCD report for silica (crystalline quartz), which contains its PEL and other relevant safety information, is presented in Appendix C – Chemical Information and Safety Data

Sheets. Activities that cause visible dust should be stopped and modified to reduce dust generation. Dust control may also be accomplished with engineering controls, such as water sprays or exhaust ventilation. However, if these fail to mitigate exposure to silica dust, particulate filtering face piece respirators will be used. Additional details are discussed in the site Monitoring Program (Section 7) and Respiratory Protection Program (Section 12).

5.24 Biological Hazards

Exposure to bloodborne pathogens may occur when providing first aid or when in contact with waste streams that may contain potentially infectious materials. Bloodborne pathogens are infectious microorganisms in human blood that can cause disease in humans, such as hepatitis B, hepatitis C, and human immunodeficiency virus.

While neither waste streams of infectious materials nor sharps and needles are anticipated as part of the ISTR application, universal precautions and engineering controls will still be implemented where necessary to reduce the risk of exposure to potential bloodborne pathogens. When providing first aid, personnel must use PPE including gloves, eye protection, and masks, and must thoroughly wash any exposed body parts and equipment to protect from exposure. If a risk of hepatitis B exposure is established, Mc² will seek to facilitate a vaccination to affected personnel within 10 days of initial assignment. If a risk of exposure to bloodborne pathogens develops, personnel must adhere to the requirements of 29 CFR 1910.1030.

Other biological hazards, such as toxins associated with plants, insects, animals, bacteria, and viruses may also be present at the site. The SSHO will review potential biological hazards with site personnel at the start of each day, and if applicable, determine appropriate procedures to minimize exposure to these hazards. In general, contact avoidance will be the primary means of defense again these types of biological hazards.

5.24.1 COVID-19

Exposure to COVID-19 can lead to infection of personnel and need to be safeguarded. All personnel must follow health measures to minimize the risk of a site outbreak, including:

- Maintain physical distancing;
- Wear PPE, including facemasks as necessary;
- Avoid large group meetings or hold group meetings in open spaces or outside;
- Wash and/or sanitize hands regularly; and
- Avoid sharing PPE, including facemasks, gloves, face shields, and other items that could become contaminated.

5.25 Motor Vehicle Safety

Motor vehicle hazards are anticipated at the ISTR project, both onsite and during travel to and from the site. All personnel must practice safe driving procedures to minimize the chance of collision, including:

- Conducting pre-trip vehicle inspections and 360-degree checks;
- Planning the driving route ahead of time;
- Only driving while alert and well-rested;
- Wearing seat belts at all times;
- Obeying driving laws all times, including all posted speed limits;
- Driving defensively, being patient and courteous to other drivers;

- Taking breaks every two hours on longer trips;
- Never driving distracted – *at no time may a cellphone be used while driving*; and,
- Never driving while fatigued or impaired – *operating motor vehicles or heavy equipment is not permitted after 12 hours of driver or operator on-duty time*.

Failure to follow these procedures may lead to termination with cause.

5.26 Lone Workers

Lone workers, whom are either performing tasks alone or where they cannot be seen or heard by another person, must be in contact with the Project Manager, SSHO, or another contact via cellular telephone. For example, responding to ISTR or treatment system alarms during operations may lead to a lone worker being onsite. The buddy system must be used whenever control zones are established (Section 8). The following procedure should be used when there is a lone worker onsite:

- Designate a primary and backup contact;
- Create a work plan and share it with the primary and backup contacts, which includes the following:
    - Destination and mode of travel;
    - Estimated time of arrival onsite;
    - Work tasks and associated hazards;
    - Emergency procedures;
    - Estimated time of departure offsite;
    - Alternate plans in case of bad weather or traffic; and,
- At a minimum, check in with the primary or backup contact a minimum of every 4 hours during the work shift.

5.27 Extended Hours and Fatigue

Extended work shifts longer than 8 consecutive hours per day, 5 days per week, with at least 8 hours of rest, can lead to additional physical, mental, and emotional stress. For example, responding to ISTR or treatment system alarms during operations may lead to extended or irregular hours onsite and increase fatigue. Symptoms of fatigue include reduced alertness, irritability, depression, headaches, and increased susceptibility to illness or injury. Mc² and the engineering consultant will monitor personnel for fatigue and endeavor to limit extended work hours through project scheduling and resource allocation. Personnel that exhibit signs of fatigue will be directed to leave the site and seek rest.

6. Hazard Communication Program

The purpose of the hazard communication program is to ensure that the hazards of all chemicals at the site are classified and communicated to site personnel. Hazard communication will comply with the requirements of 29 CFR 1910.120(p)(2) and 29 CFR 1910.1200. Note that hazardous wastes subject to the regulations of the Resource Conservation and Recovery Act (RCRA) are exempt from the hazard communication standard, as are substances that are the focus of a remedial or removal action being conducted under the Comprehensive Environmental Response, Compensation and Liability Act (CERCLA).

6.1 List of Hazardous Substances

A list of the hazardous chemicals that may be present at the site and have the potential to cause exposure to site personnel is provided in Appendix C – Chemical Information and Safety Data Sheets, based on the anticipated activities associated with the removal action and the information presented in the NASA Marshall Space Flight Centre SA-13 RFP. This list will be modified as necessary to address changes in site condition or as new information becomes available. The SSHO is responsible for maintaining an inventory of hazardous substances that are brought to the site.

6.2 Identifying Containers of Hazardous Chemicals

All containers of hazardous chemicals at the site will have the original manufacturer's label, including a product identifier, signal word, hazard statement(s), pictogram(s), precautionary statement(s), and name, address, and telephone number of the chemical manufacturer, importer, or other responsible party. Labels are not required for portable containers intended for immediate use. The SSHO is responsible for verifying that containers are appropriately labeled. Drums and containers that may contain hazard waste which are collected as part of the remedial or removal action will be labeled in accordance with 29 CFR 1910.120(j) (contents, date of collection, emergency response telephone number, and waste status determination).

6.3 Safety Data Sheets

Appendix C – Chemical Information and Safety Data Sheets includes SDSs for chemicals that may be used during the construction and operation of the ISTR system, and, for reference, USOSHA Occupational Chemical Database reports for Airborne Contaminants for potential chemicals of concern at the site identified by AECOM (2019). These documents include physical properties, health hazards, exposure limits, personal protection, and emergency response information for the potential chemicals of concern. Product identifiers on the SDSs will match the labels on shipped containers. The SSHO is responsible for maintaining printed SDSs onsite and ensuring they are readily available to site personnel. The Project Manager will also maintain SDSs electronically on an offsite server.

6.4 Training

Site personnel must be trained on hazard communication in accordance with 29 CFR 1910.1200(h) during a pre-entry briefing prior to performing any field activities. The SSHO is responsible for providing this training. Topics include:

- The location and availability of the written hazard communication program;

- How to read and use the information on the SDSs and container labels;
- A review of the hazardous chemicals that may be present;
- Any operations in their work area where hazardous chemicals are present;
- Methods to detect the presence or release of a hazardous chemical;
- The physical, heath, and other hazards associated with each chemical; and,
- Measures employees can take to protect themselves from these hazards, including procedures to prevent exposure, appropriate work practices, emergency procedures, and PPE to be used.

Signature of the HASP acknowledgement (Appendix E – Site Safety Forms) indicates that training of site personnel in the above topics has been completed on the date specified.

6.5 Non-Routine Tasks and Subcontractors

The SSHO will review the hazards of non-routine tasks with the applicable site personnel prior to them performing the task, including protection from exposure and emergency procedures. Personnel must also be informed of the identity and hazards of any chemicals in unlabeled pipes prior to performing work in nearby areas. All subcontractors, vendors, and other third-party personnel involved in the ISTR implementation are responsible for maintaining compliance with 29 CFR 1910.1200 themselves throughout the entire execution of their scope. This includes providing SDSs and communicating the hazards associated with their work activities.

7. Monitoring

Monitoring will be implemented in accordance with the requirements the requirements in 29 CFR 1910.120(h). All subcontractors, vendors, and other third-party personnel engaged in the ISTR application must provide for their own monitoring and maintain compliance with 29 CFR 1910.120 throughout the entire execution of their scope. In this discussion, it is assumed that site characterization has been completed by others prior to the ISTR project, such all potential contaminants known or suspected of being present at the site have been identified, and that no ionizing radiation, IDLH, or other dangerous condition exists, such as the presence of flammable atmospheres and oxygen-deficient environments. Recordkeeping of monitoring results will be performed in accordance with the requirements described in Section 16.

7.1 Air Monitoring

Air monitoring will be performed using direct-reading instruments onsite to (i) evaluate the exposure of airborne constituents to site personnel and (ii) determine the PPE selection, engineering controls, or work practices required to limit exposure to below the PELs for the constituents at the site. Air samples may also be collected for laboratory analysis at the discretion of the SSHO. Field calibration of air monitoring equipment will be performed at the start of each day prior to performing other site activities and must comply with manufacturers' instructions. Direct-reading instruments must also be maintained in accordance with manufacturers' instructions. Any instrument unable to calibrate against a known standard or suspected of being inaccurate will be immediately taken out of service and replaced with a new unit. Air monitoring and PID calibration logs are presented in Appendix E – Site Safety Forms.

Air monitoring instruments and methods that may be used at the site are presented in Table 11, depending on the nature of the hazards for specific activities. In general, a PID will be used onsite throughout the ISTR implementation, and the SSHO will determine if other air monitoring instruments are needed based on a case-by-case basis. Action levels for the airborne constituents are presented in Table 12, based on the most restrictive PEL for the constituents identified by AECOM (2019). For this site, the most restrictive constituent is benzene, which has a PEL-TWA of 1.0 ppm, a PEL-C of 5.0 ppm, and correction factor of 0.53 for a 10.6 eV PID.

Table 11: Air monitoring instruments

Instrument	Make / Model	Range
Photoionization detector	MiniRAE 3000 (10.6 eV) or equivalent	0 to 15,000 ppm
Colorimetric Indicator Tubes	Draeger Tubes or equivalent	Variable
Particulate monitor	MIE PDR 1000 or equivalent	0.001 to 400 mg/m3
Flammable vapor (LEL) meter	MultiRAE, RKI Eagle 2, or equivalent	0 to 100% LEL
Oxygen (O2) meter	MultiRAE, RKI Eagle 2, or equivalent	0 to 40% O2
Carbon monoxide (CO) meter	MultiRAE, RKI Eagle 2, or equivalent	0 to 500 ppm CO
Hydrogen sulfide (H2S)	MultiRAE, RKI Eagle 2, or equivalent	0 to 100 ppm H2S
Air sampling for lab analysis	Summa Canister or Tedlar Bag	Variable

Table 12: Air monitoring action levels assuming a 10.6 eV PID calibrated to isobutylene

Parameter	Reading	Action
VOCs (Total)	≤ 0.5 ppm	Normal operations; routine air monitoring in breathing space; Level D PPE
	> 0.5 to ≤ 25 ppm	Upgrade to Level C PPE; increase air monitoring in breathing space; implement engineering controls; implement colorimetric tube (if applicable)
	> 25 ppm	Stop work, evacuate, investigate cause; implement engineering controls; use Level C PPE for escape or upgrade to Level B PPE
Vinyl chloride (colorimetric tube)	≤ 1.0 ppm	Normal operations; routine air monitoring in breathing space; Level D PPE
	> 1.0 to ≤ 10 ppm	Upgrade to Level C PPE; increase air monitoring in breathing space; implement engineering controls
	> 10 ppm	Stop work and evacuate the area; investigate cause; implement engineering controls; use Level C PPE for escape or upgrade to Level B PPE
Flammable vapors (LEL)	≤ 10% LEL	Normal operations; routine monitoring
	> 10% LEL	Stop work, evacuate, investigate cause; implement engineering controls
Oxygen (O2)	< 19.5%	Stop work, evacuate, investigate cause; implement engineering controls; evaluate upgrade to Level B
	> 19.5 to 23.5%	Normal operations; routine monitoring
	> 23.5%	Stop work, evacuate, investigate cause; implement engineering controls; evaluate upgrade to Level B
Carbon monoxide (CO)	≤ 25 ppm	Normal operations; routine monitoring
	> 25 ppm	Stop work, evacuate, investigate cause; implement engineering controls
Hydrogen sulfide (H2S)	≤ 1.0 ppm	Normal operations; routine monitoring
	> 1.0 ppm	Stop work, evacuate, investigate cause; implement engineering controls
Particulates (silica, crystalline)	≤ 0.05 mg/m3	Normal operations; routine monitoring
	> 0.05 to ≤ 0.5 mg/m3	Upgrade to particulate respirator equipped with an N95, R95, P95 filter or higher (except quarter-masks); implement engineering controls
	> 0.5 to ≤ 2.5 mg/m3	Upgrade to air-purifying, full-facepiece respirator equipped with an N100, R100, P100 filter; implement engineering controls
	> 2.5 mg/m3	Stop work, evacuate, investigate cause; implement engineering controls

7.1.1 Site and Personnel Monitoring

Routine air monitoring will be conducted during activities where it can reasonably be assumed that site personnel may come into contact with airborne constituents, such as:

- During coring, drilling, and subsurface installation activities (e.g., when drilling returns or cuttings are collected above ground surface);
- During intrusive activities in the treatment volume (e.g., opening a well to perform data collection or sampling activities);
- During intrusive extraction or treatment system maintenance (e.g., transferring product between vessels, performing bag filter or media change outs); and,
- When characterizing or managing wastes (e.g., opening roll-off bins, frac tanks, or drums to perform sampling).

After visually identifying the sources of possible generation, air monitoring will be performed downwind of the designated source (i.e., the maximum anticipated concentration), and in the breathing space or outside the face piece of personnel working near the designated source (i.e., the actual concentration of inhalation exposure). PPE selection will be based on the results obtained, the assigned respiratory protection factors as found in 29 CFR 1910.134, and the potential for an unexpected release of chemicals during the activity.

7.1.2 Monitoring of IDLH and Dangerous Conditions

Although it is assumed that initial entry and site characterization has been performed by others, periodic monitoring for IDLH or other dangers conditions will be performed if there is an indication that exposures may have risen since prior monitoring, including:

- When work begins on a different portion of the site;
- When contaminants other than those previously identified are being handled;
- When a different type of operation is initiated (e.g., drum opening as opposed to exploratory well drilling);
- When employees are handling leaking drums or containers or working in areas with obvious liquid contamination (e.g., a spill or lagoon); and,
- When the presence of flammable or oxygen-deficient environments is suspected.

Low-lying and poorly ventilated areas, such as trenches, indoor areas, vaults, tanks, or confined spaces, will be given a higher monitoring priority, especially when contaminants might be heavier than air.

7.1.3 Perimeter Monitoring

Perimeter air monitoring will be performed periodically at the site boundaries where PPE is no longer required. This data will be used to determine any migration of contaminants offsite and to ensure that the clean areas of the site are not compromised. Wind speed and direction should be also noted to assist with the interpretation of the results.

7.2 Noise Monitoring

Noise monitoring will be conducted at the discretion of the SSHO to ensure compliance with the requirements of 29 CFR 1910.95, or if disturbances are reported by the public. It is recommended that baseline noise monitoring is performed prior to turning on the ISTR and treatment systems, especially at sites in higher traffic areas.

8. Site Control

Site control will be implemented in accordance with the requirements of CFR 1910.120(d) to protect workers and the public from the hazards associated with the ISTR implementation. These controls will also protect the equipment from theft or vandalism.

8.1 Site Map

A site map that shows the site boundaries and access points attached in Appendix A – Figures. Directions to the nearest hospital are presented in Figure 1.

8.2 Security and Access

Site security will be established prior to starting the installation of the ISTR equipment by installing construction fencing around the site perimeter. Access points will be selected to control traffic in and out of the site, and monitored by the SSHO and/or engineering consultant. Any site visitors must sign a logbook that includes their times of entry and exit (Appendix E – Site Safety Forms), attend a pre-entry briefing, and comply with the requirements of this HASP.

8.3 Site Work Zones

Site work zones will be established based on the types of tasks that are being performed, under the supervision and control of the SSHO and/or engineering consultant. One work zone will be sufficient for most tasks associated with the ISTR application, which are generally anticipated to require Level D or Modified Level D PPE. If an upgrade to Level C PPE is required, the site will be divided into an Exclusion Zone, a Contaminant Reduction Zone, and a Support Zone. This must be documented in the Site Work Zone Log (Appendix E – Site Safety Forms). The buddy system will be implemented if site work zones are established.

The Exclusion Zone includes areas where contamination is present or likely to be present, and will be clearly designated by a Hot Line (e.g., marked lines, hazard tape, or physical boundaries) if it is established. Personnel in the Exclusion Zone must use PPE consistent with the level of protection required for the task at hand, and enter and exit the through designated Access Control Points.

The Contaminant Reduction Zone lies between the contaminated and clean areas, and will be used for the decontamination of personnel, equipment, and samples. Personnel in the Contaminant Reduction Zone must use PPE consistent with the level of protection required for the decontamination procedures.

The Support Zone includes areas where there is no contamination present or likely to be present, and is separated from the Contaminant Reduction Zone by the Contamination Control Line. Personnel in the Support Zone do not require additional PPE.

8.4 Communication Methods

Internal communication between onsite personnel will be primarily verbal and external communication to office or support personnel will be primarily via cell phone or email. If verbal communication onsite is impeded, visual signals or radio may also be used.

9. Training and Medical Surveillance

All site personnel must understand the potential health and safety hazards associated with both the ISTR application and overall hazardous waste operations at the site, and must be trained in the procedures relevant to their work assignments, in accordance with the requirements 29 CFR 1910.120(e). Furthermore, site personnel who may come into contact with any hazardous substances must be involved in a medical surveillance program as described in 29 CFR 1910.120(f), 29 CFR 1910.134(e), and 29 CFR 1910.95. Any visitors must receive a health and safety briefing prior to entering the site, and are not permitted to enter the Exclusion Zone (if established) without having met the training and medical surveillance requirements described in this HASP.

9.1 Training Requirements

A summary of the training requirements for the personnel engaged in the ISTR application is presented in Table 13. Training records will be actively maintained and reviewed periodically to ensure continued compliance.

9.1.1 HAZWOPER Training

Site personnel involved in hazardous waste operations in the established work zones, or whom in the course of their work assignments may come into contact with any hazardous substances, must complete an initial 40 hours of OSHA HAZWOPER training and three days of supervised field experience per CFR 29 1910.120(e)(3), and maintain annual 8 hour OSHA HAZWOPER refresher training per CFR 29 1910.120(e)(8). Site supervisors who are directly responsible for other workers engaged in hazardous waste operations, including the SSHO, must also complete an additional 8 hours of OSHA HAZWOPER Supervisor Training, per CFR 29 1910.120(e)(4).For workers not directly involved in cleanup activities which may expose them to soil from below 5 ft BGS, when site characterization shows that the area to be serviced by workers is free of potential exposure, or the proposed work assignments would not expose any of the work crew to hazardous substances, the activity can be carried out as a normal maintenance or construction operation.

9.1.2 Site-Specific Training

Prior to performing any activities, all personnel must complete site-specific training and a pre-entry briefing that includes the following topics:

- General site introduction;
- Review and acknowledgement of the HASP;
- General safe work practices;
- Nature of anticipated hazards;
- Hazard communication program;
- Safe use of tools and equipment;
- Selection, use, maintenance, and limitations of PPE;
- Decontamination procedures; and,
- Emergency procedures.

All site personnel must have had training relevant for their job function, including proposed work assignments and tasks to be performed, and must provide any documentation necessary for compliance with relevant national, provincial/state, and local regulations (e.g., 29 CFR 1910, 29 CFR 1926).

Table 13: Training requirements

Personnel	Training
SEE Technicians or Operators	40-hour HAZWOPER Training (initial) 8-hour HAZWOPER Training (refresher, annual) NFPA 70E Training (every three years, including shock, electrocution, arc flash, and arc blast) Electrical Qualification per 1910.332(b)(3) SEE JSA Procedures (initial) First Aid/CPR Training (every three years) Site-Specific Training (initial)
Site Safety and Health Officer (SSHO)	40-hour HAZWOPER Training (initial) 8-hour HAZWOPER Training (refresher, annual) 8-hour HAZWOPER Supervisor Training (initial) First Aid/CPR Training (every three years) Site-Specific Training (initial)
Onsite Management or Supervisors	40-hour HAZWOPER Training (initial) 8-hour HAZWOPER Training (refresher, annual) 8-hour HAZWOPER Supervisor Training (initial) First Aid/CPR Training (every three years) Site-Specific Training (initial)
Site Workers *(inside established contaminated work zones)*	40-hour HAZWOPER (initial) 8-hour HAZWOPER (refresher, annual) Site-Specific Training (initial)
Visitors or Site Workers *(outside established contaminated work zones)*	Site-Specific Training (initial)

9.1.3 Additional Training

ISTR technicians or operators and site supervisors will be trained in First Aid/CPR and maintain active refresher training as required. Forklift operators will have completed training consistent with or equivalent to the requirements of 29 CFR 1910.178. Site personnel must be trained in the use of tools or equipment specific to their work assignments. Furthermore, technicians or operators must receive onsite training consistent with the activities described in the JSA procedures (Appendix B – Job Safety Analysis (JSA) Procedures). Electrical work will be performed only by competent and qualified personnel. Any personnel performing work on or near energized equipment (including operators) must complete NFPA 70E training, including arc flash hazard awareness, and be familiar with equipment lockout/tagout and emergency shutdown procedures.

Other training that may be relevant to site operations include:

- Vinyl chloride awareness;
- Silica awareness;
- Abestos awareness;
- Equipment operator training (for trenching; may use specialty subcontractor);
- Crane operations and rigging (specialty subcontractor);

- Fall protection competent person;
- Confined space awarness; and,
- Respiratory protection.

9.2 Medical Surveillance

Individuals engaged in hazardous waste operations in the established work zones, or whom in the course of their work assignments may come into contact with any hazardous substances, will be subjected to the medical monitoring and record keeping requirements of 29 CFR 1910.120(f). This includes medical examinations (i) prior to assignment, (ii) at least once every twelve months, and (iii) upon termination or reassignment, of personnel who may be exposed to hazardous substances or health hazards at or above applicable Permissible Exposure Limits (PELs) for 30 days or more a year, or personnel who wear a respirator for 30 days or more a year. Individuals already involved in a corporate medical surveillance program that addresses the conditions specific to the site will not require additional surveillance.

Medical surveillance will be used to establish a medical or work history and fitness for duty, including the ability to work while wearing PPE. Individuals using respirators must also comply with the medical evaluation requirements of 29 CFR 1910.134(e) and be subjected to annual fit testing. In addition, any personnel whose noise exposure exceeds an 8 hour TWA of 85 dBA will be subjected to audiometric testing per 29 CFR 1910.95.

Based on the substances that have been detected previously at the site and experience at previous SEE projects with similar substances, chemical-specific surveillance is not anticipated to be required at this time. However, this may be amended if monitoring during the project demonstrates that action levels are being exceeded regularly for particular substances. In such a case, any required medical examination and/or testing will be determined by an occupational physician. The guidelines presented in Section 5 of the *Occupational Safety and Health Guidance Manual for Hazardous Waste Site Activities* (NIOSH/OSHA/USCG/EPA, 1985) indicate that for halogenated aliphatic hydrocarbons and aromatic hydrocarbons, this may include medical examination and/or testing with focus on the liver, kidney, nervous system, and skin.

10. Personal Protective Equipment

The Hierarchy of Controls specifics the following methods to minimize exposure to hazards, in order of decreasing effectiveness:

(i) Elimination;
(ii) Substitution;
(iii) Engineering controls;
(iv) Administrative controls, and;
(v) Personal Protective Equipment.

If the more effective methods of hazard controls cannot be safely or practicably implemented, or do not adequately minimize exposure to a specific hazard associated with the ISTR application, the use of PPE is required.

10.1 Levels of Protection

PPE ensembles planned for use at the site that offer several levels of protection where chemical hazards may exist are presented in Table 14. A minimum of Level D is required for all site work, with upgrades or downgrades for specific tasks or based on monitoring data. Any upgrade to Level B or higher will require a work stoppage, hazard review, HASP update, and coordination between the Operations Manager, SSHO, engineering consultant, and/or other subcontractors. In general, Mc² personnel avoid Level B or higher work conditions.

Table 14: Levels of protection (adapted from NIOSH/OSHA/USCG/EPA, 1985)

Protection	Equipment	General Use	Limiting Criteria
Level C	• Full-facepiece, air-purifying, canister-equipped respirator with appropriate cartridges for known contaminants (OV/P100, NIOSH-approved) • Chemical-resistant clothing, such as a disposable chemical-resistant one-piece Tyvek® or Saranex® suit, with cuffs and ankles taped to gloves and boots • Inner chemical resistant nitrile gloves, outer chemical resistant neoprene rubber or nitrile gloves • Chemical-resistant steel-toed boots, or steel-toed boots with disposable chemical-resistant over-boots (EH rated, Grade 1, ANSI Z41.1-1999 / CSA Z195-14) • Hard hat (Type I, Class E, compatible with face shield, ANSI Z89.1-2003 / CSA Z94.1-15) • Hearing protection (for noise above 85 dBA)	• Atmospheric contaminants, liquid splashes, or other direct contact will not adversely affect any exposed skin • Types of air contaminants have been identified, concentrations measured, and canister is available that can remove the contaminant • All criteria for the use of air-purifying respirators are met	• Action levels per Table 11 • Atmospheric concentration of chemicals may not exceed IDLH levels • The atmosphere must contain at least 19.5% oxygen

Protection	Equipment	General Use	Limiting Criteria
Modified Level D	• Chemical-resistant clothing, such as a disposable chemical-resistant one-piece Tyvek® or Saranex® suit or coveralls, and disposable chemical-resistant over-boots (where chemical hazards exist) • Face shield affixed to hard hat, splash suit or rain coat (where splash hazards exist) • Inner chemical resistant nitrile gloves, outer chemical resistant neoprene rubber or nitrile gloves (where chemical or splash hazards exist) • Safety glasses or goggles, with side shields (ANSI Z87.1-2010 / CSA Z94.3-07) • Steel-toed boots (EH rated, Grade 1, ANSI Z41.1-1999 / CSA Z195-14) • Hard hat (Type I, Class E, compatible with face shield, ANSI Z89.1-2003 / CSA Z94.1-15) • Hearing protection (for noise above 85 dBA) • Burn protection (thermal protection gloves and/or apron) • Fall protection harness	• Atmospheric contaminants, liquid splashes, or other direct contact will not adversely affect any exposed skin • The atmosphere contains no known hazard • Work functions preclude the potential for unexpected inhalation of or contact with hazardous levels of any chemical • Burn protection as needed (e.g., working near hot extraction piping, hot soil or groundwater sampling) • Fall protection as needed (e.g., changing vapor carbon vessels out, requiring access to top of vessels)	• Action levels per Table 11 • This level may not be worn in the Exclusion Zone • The atmosphere must contain at least 19.5% oxygen

Protection	Equipment	General Use	Limiting Criteria
Level D	• Work clothing, weather appropriate, with high visibility safety vest (Class II or greater, ANSI 107-2015 / CSA Z96-15) • Safety glasses or goggles, with side shields (ANSI Z87.1-2010 / CSA Z94.3-07) • Work gloves, task appropriate (ANSI 105-2016) • Steel-toed boots (EH rated, Grade 1, ANSI Z41.1-1999 / CSA Z195-14) • Hard hat (Type I, Class E, compatible with face shield, ANSI Z89.1-2003 / CSA Z94.1-15) • Hearing protection (for noise above 85 dBA)	• The atmosphere contains no known hazard • Work functions preclude splashes, immersion, or the potential for unexpected inhalation of or contact with hazardous levels of any chemicals	• Action levels per Table 11 • This level may not be worn in the Exclusion Zone • The atmosphere must contain at least 19.5% oxygen

10.2 PPE Selection

Hazard assessments that influence PPE selection are discussed in Section 5 and Appendix B – Job Safety Analysis (JSA) Procedures. A summary of PPE selection for chemical hazards during various site activities is presented in Table 15. Specific upgrades or downgrades will be performed based on monitoring data (e.g., Table 12; Section 7), with the concurrence of site personnel, the SSHO, and the project manager.

Table 15: PPE selection for chemical hazards

Task	Chemical Hazards	Anticipated Level of Protection
Site mobilization	None	Level D
Subsurface installation	Moderate	Level D, Modified Level D, Level C
Aboveground installation	Low to Moderate	Level D, Modified Level D
Acceptance testing	Moderate	Level D, Modified Level D, Level C
Operations	Moderate	Level D, Modified Level D, Level C
Sampling	Moderate	Level D, Modified Level D, Level C
Site demobilization	Moderate	Level D, Modified Level D, Level C

For electrical hazards, personnel working within a *restricted approach boundary* will use PPE in accordance with NFPA 70E 130.4. This includes the use of Class 0 rubber insulating gloves with leather protectors where there is a danger of electric shock due to contact with energized electrical conductors or circuit parts operating at up to 1,000 V AC / 1,500 V DC. EH-rated footwear, and Class E hard hats, and ANSI Z87.1 eyewear will also be used to mitigate general shock hazards during the project. While working within

an *arc flash boundary*, the PPE listed in NFPA 70E Table 130.7(C)(16) must be used to mitigate the arc flash hazards established within that boundary. The Arc Flash Hazard Analysis (Appendix D – Arc Flash Hazard Analysis) contains the PPE requirements applicable for this site.

PPE requirements for specific tasks designated in the JSA procedures (Appendix B – Job Safety Analysis (JSA) Procedures) must also be followed. For example, for tasks where there is a risk of exposure to hot fluids, additional PPE such as face shields, splash hoods, splash suits or rain coats, thermal resistant gloves, and long sleeve garments might be required. Site personnel should consult the JSA procedure prior to performing the task, and verify PPE selection requirements with the SSHO. In addition, subcontracted entities must communicate any PPE requirements associated with their scope of work to the SSHO, project manager, and/or engineering consultant.

10.3 Respiratory Protection

Engineering controls, such as ventilation of the breathing space, enclosure of the operation, or substitution of materials, should be the first line of defense against respiratory hazards. If air monitoring shows that engineering controls do not sufficiently reduce the inhalation exposure hazards (Section 7), respirators will be used to protect site personnel. Respirator use may also be voluntary. Details of respiratory protection are described in Section 12.

10.4 Storage, Maintenance, and Inspection

PPE must be kept in good working order to provide sufficient protection. Before each use, PPE should be inspected for proper fit and any wear or flaws that might reduce its ability to minimize hazard exposure. This may include a visual inspection or leak testing of the PPE to identify any holes, cracks, tears, discoloration, stiffness, foreign items, or other deficiencies that may compromise its use. During the work task, personnel should periodically inspect for any evidence of chemical attack, such as discoloration, swelling, stiffness, and softening, although it should be noted that chemical permeation is sometimes possible without any visible effects. Manufacturer guidelines for storage, cleaning, and maintenance will be followed. Electrical-insulating gloves and other rubber insulating equipment will be tested in accordance with NFPA 70E Table 130.7(C)(7)(c).

10.5 Use and Training

Site personnel are responsible for properly wearing, cleaning, maintaining, and inspecting PPE, and should be trained in these procedures. Mc² will provide or arrange for this training for its employees. Site personnel are also responsible for informing the SSHO if any PPE needs to be replaced, and the SSHO should ensure that sufficient quantities of PPE are on hand. PPE must properly fit the user to function as intended.

Donning procedures for Level C PPE will consist of the following steps:

- In the Support Zone, inspect PPE, including chemical-resistant clothing, respiratory protection, gloves, boots, and hard hat;
- Step into the legs of the chemical-resistant clothing, ensure proper placement of feet within the suit, and gather around the waist;
- Put on chemical-resistant boots or disposable over-boots and tape cuffs;
- Put on full-facepiece, air-purifying, canister-equipped respirator;
- Perform positive and negative pressure respirator seal check;
- Put on inner chemical resistant gloves;

- Reach into sleeves of the chemical-resistant clothing and tape cuffs;
- Put on hard hat and adjust for snug fit;
- Raise hood of chemical-resistant clothing over the head and adjust for snug fit;
- Put on outer chemical-resistant gloves; and,
- Before entering Exclusion Zone, observe wearer to ensure the fit is comfortable and all equipment is functioning properly.

During use, personnel should monitor for any potential malfunctions of the PPE, such as degradation, perception of odors, residues, discomfort, fatigue due to respirator use, skin irritation, rapid pulse, nausea, chest pain, resistance to breathing, or interference with vision or communication.

Doffing procedures for Level C PPE will consist of the following steps:

- In the Contaminant Reduction Zone, perform decontamination procedure, avoiding any direct contact with the outside of the chemical-resistant clothing, respiratory protection, boot covers, gloves, and hood;
- Remove disposable boot covers, outer gloves, and cuff tape;
- Lower hood of chemical-resistant clothing and remove arms one at a time, avoiding any direct contact with the outside of chemical-resistant clothing;
- While sitting, remove both legs and step out from chemical-resistant clothing;
- Lay out chemical-resistant clothing flat behind the wearer;
- Remove internal gloves, rolling them off the hand, inside out;
- Remove internal clothing and cleanse body.

Generally, facial hair and longer hair that may interfere with respirator use and vision is not permitted, and a spectacle kit should be used in the face masks of personnel requiring vision correction. PPE use may also increase the risk of heat stress, especially when higher levels of protection are used. Site personnel must be vigilant in monitoring the signs of heat stress, and implement the hazard controls described in Section 5.5, such as acclimatization, monitoring, and work/rest schedules.

10.6 Decontamination and Disposal

Decontamination procedures are detailed in Section 11. In general, disposable PPE (e.g., nitrile gloves and Tyvek® suits) will be removed and disposed of in labeled drums for waste management by the engineering consultant, in accordance with any relevant national, provincial/state, and local regulations. Reusable PPE (e.g., work boots, respirators, and neoprene rubber gloves) will be sufficiently decontaminated such that they do not cause site personnel to be exposed to contaminants between uses.

10.7 New Technologies

Per 29 CFR 1910.120(o), the SSHO and site personnel should evaluate new products and equipment introduced by manufacturers to protect workers who perform hazardous waste cleanup operations. These products should be evaluated when purchasing new or replacing existing equipment.

11. Decontamination

Decontamination will be implemented in accordance with the requirements 29 CFR 1910.120(k) to minimize the contact of site personnel with hazardous substances. Personnel, clothing, equipment, and samples leaving the contaminated area of the site (i.e., Exclusion Zone) must be decontaminated in the Contaminant Reduction Zone. As part of this effort, work practices that minimize the potential for contamination should be followed, such as:

- Minimizing contact with hazardous substances;
- Using remote sampling or handling techniques;
- Bagging monitoring or sampling materials;
- Using disposable outer garments and equipment;
- Inspecting and correctly donning/doffing PPE; and,
- Encasing the source of the contamination with engineering controls.

11.1 Decontamination Procedures

Decontamination stations will be located onsite based on the geometry of the work zones established, in geographical areas that will minimize the exposure of uncontaminated employees or equipment to contaminated employees or equipment.

11.1.1 Personnel and PPE

Decontamination procedure guidelines for personnel in Level C protection from NIOSH/OSHA/USCG/EPA (1985) are presented in Figure 7 and Table 16.

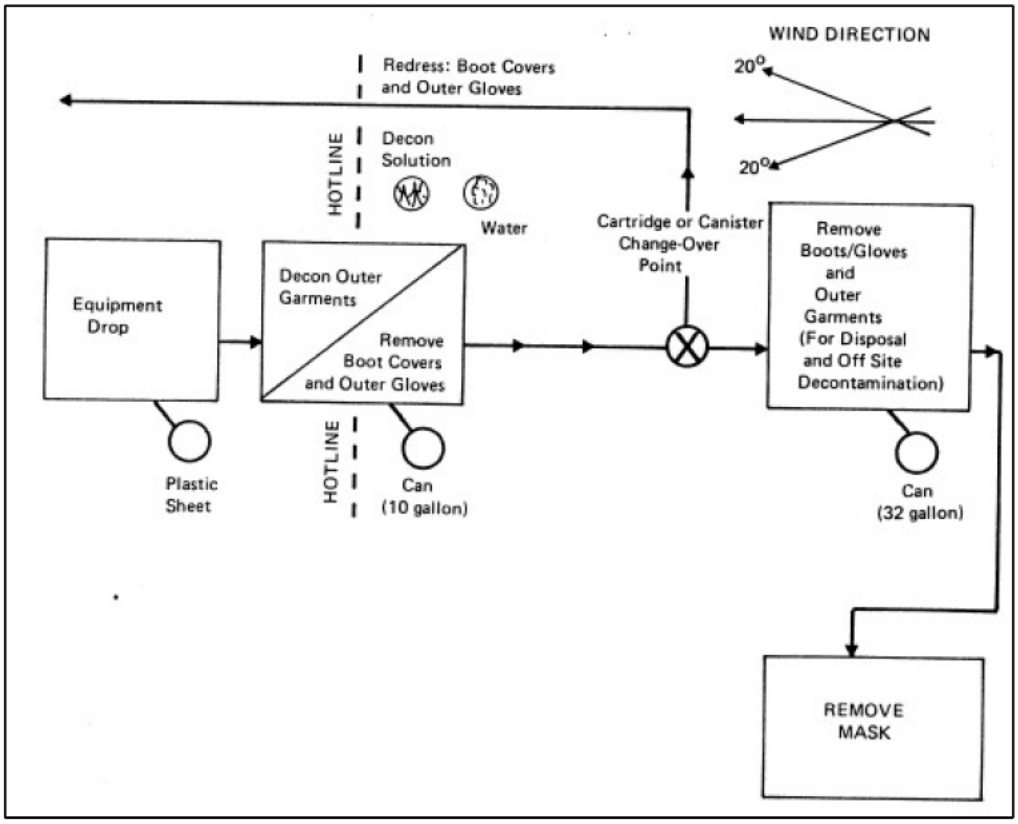

Figure 7: Decontamination layout for personnel in Level C protection

Table 16: Decontamination steps for personnel in Level C protection

Station	Action	Description
Station 1	Equipment Drop	• Deposit equipment used onsite (tools, sampling devices and containers, monitoring instruments, radios, clipboards, etc.) on plastic drop cloths • Segregation at the drop reduces the probability of cross contamination • During hot weather operations, a cool down station may be set up within this area
Station 2	Outer Garment, Boots, and Gloves Wash and Rinse	• Scrub outer boots, outer gloves and splash suit with decontamination solution or detergent water • Rinse off using copious amounts of water
Station 3	Outer Boot and Glove Removal	• Remove outer boots and gloves • Deposit in container with plastic liner
Station 4	Canister or Mask Change	• If worker leaves exclusive zone to change canister (or mask), this is the last step in the decontamination procedure • Worker's canister is exchanged, new outer gloves and boot covers donned, joints taped, and worker returns to duty
Station 5	Boot, Gloves and Outer Garment Removal	• Boots, chemical-resistant splash suit, inner gloves removed and deposited in separate containers lined with plastic
Station 6	Face Piece Removal	• Facepiece is removed • Avoid touching face with fingers • Facepiece deposited on plastic sheet
Station 7	Field Wash	• Hands and face are thoroughly washed • Shower as soon as possible

Disposable PPE (e.g., nitrile gloves and Tyvek® suits) will be removed and disposed of in labeled drums for waste management by the engineering consultant, in accordance with any relevant national, provincial/state, and local regulations. Reusable PPE (e.g., work boots, respirators, and neoprene rubber gloves) will be sufficiently decontaminated such that they do not cause site personnel to be exposed to contaminants between uses. PPE decontamination will be performed within dedicated containment by scrubbing with soft-bristled brushes or sponges, spraying with low-pressure water, and/or rinsing with a detergent and water solution. Paper or cloth towels may be used in addition to air drying. Any equipment used for decontamination and rinse water will be contained, and either (i) collected in labeled containers for waste management by the engineering consultant, or (ii) processed through the treatment system, if applicable.

11.1.2 Equipment and Vehicles

Equipment and vehicles that have come into contact with contaminated media in the Exclusion Zone will be decontaminated in the Contaminant Reduction Zone. This may include remediation equipment, hand tools, drill rigs, heavy equipment, or support vehicles. A vacuum truck will be utilized during decontamination activities and will require subsequent decontamination. For vehicles or equipment with lower levels of contamination, a dry brush will be used to remove material from the body and tires, and then it will be rinsed on a decontamination pad prior to leaving the exclusion zone. For vehicles or equipment with higher levels of contamination, steam cleaning or pressure washing may be needed.

In general, non-porous materials (e.g., metal) and porous materials (e.g., wood, plastic, rubber) will be cleaned by scrubbing with soft-bristled brushes or sponges, spraying with low-pressure water, and/or rinsing with a detergent and water solution. However, porous materials that are grossly contaminated will be removed and disposed of in a labeled container for waste management by the engineering consultant. Contaminated monitoring equipment will be cleaned in accordance with manufacturer specifications. Spray bottles can be used to administer the decontamination solution for equipment that may be damaged by scrubbing.

Prior to demobilization, contaminated remediation equipment and spent chemical containers will be triple rinsed with a steam pressure washer. Scaled or fouled equipment may also be subjected to rinsing with an aqueous descaler, biodispersant, and/or biocide solution. Descaler, biodispersant, and/or biocide will be pumped directly from the supply drum or tote to the treatment system. If a dilution is required, a hand-powered drum pump will be used. Lead process components will be decontaminated first, such that rinse water can be processed by the lag process components to minimize waste. Typically, decontamination fluids are processed by the liquid-phase activated carbon to the greatest extent possible, with treated water discharged to the normal discharge point. Following this, a vacuum truck is used to allow cleaning of any remaining tanks, with offsite disposal of final decontamination fluids. Spent carbon will be disposed of by the carbon supplier. Additional procedures may be needed for specific contaminants.

11.2 Decontamination Workers

Decontamination workers must use the same level of protection as persons in the Exclusion Zone, and must also be decontaminated before leaving the Contaminant Reduction Zone.

11.3 Decontamination Effectiveness

The effectiveness of decontamination will be determined primarily by visual inspection, using performance metrics such as discolorations, stains, corrosive effects, visible dirt, or alterations in clothing fabric. Personnel and equipment may also be screened with a PID or other direct-reading instrument to determine decontamination effectiveness. If determined to be needed at a later date, these methods may be supplemented with wipe sampling, sampling the rinse solution, or direct testing for permeation.

11.4 Polychlorinated Biphenyls

For sites with polychlorinated biphenyl (PCB) impacts, the requirements of the Toxic Substances Control Act (TSCA) will apply, including decontamination and waste management procedures. PCBs are not anticipated to be present at this site.

11.5 Program Evaluation

The Operations Manager will coordinate with the Project Engineer and SSHO to periodically evaluate and revise the decontamination plan, especially if there are PPE changes, variable site conditions, or new site hazards identified.

12. Respiratory Protection Program

The purpose of the respiratory protection program is to establish procedures to protect site personnel from exposure to potential respiratory hazards throughout the ISTR implementation. Respirators are intended to supplement engineering controls when necessary to protect the health of site personnel, or in case of emergency. This program applies to personnel who are required to wear respirators during normal work operations or emergency operations, as well as those who wear respirators voluntarily. Respiratory protection will comply with the requirements of 29 CFR 1910.134. In this discussion, it is assumed that site characterization has been completed by others prior to the ISTR project, such all potential contaminants known or suspected of being present at the site have been identified, and that no ionizing radiation, IDLH, or other dangerous condition exists, such as the presence of flammable atmospheres or oxygen-deficient environments.

12.1 Responsibilities

The Operations Manager is designated as the respirator protection program administer for the site. The program administration is responsible for duties such as:

- Developing, implementing, and updating the respiratory protection program;
- Identifying work areas, processes, or tasks that require workers to wear respirators, and evaluating hazards;
- Selecting of respiratory protection options;
- Arranging for and/or conducting training, fit testing, and medical surveillance;
- Monitoring respirator use and verifying they are used correctly; and,
- Ensuring proper storage, cleaning, inspections, and maintenance of respiratory protection equipment.

The Project Manager and SSHO are responsible for duties such as:

- Ensuring workers under their supervision have received appropriate training, fit testing, and medical surveillance;
- Ensuring the availability of appropriate respirators and accessories;
- Being aware of tasks requiring the use of respiratory protection;
- Continually monitoring work areas and operations to identify respiratory hazards;
- Enforcing the proper use of respiratory protection when necessary; and,
- Ensuring that respirators are properly cleaned, maintained, inspected, and stored according to the respiratory protection plan.

Site personnel are responsible for:

- Wearing their respirator when and where required and in the manner in which they were trained;
- Caring for and maintain their respirators as instructed, and storing them in a clean, sanitary location;
- Informing their supervisor if the respirator no longer fits well, and requesting a new one that fits properly;
- Informing their supervisor or the Program Administrator of any respiratory hazards that they feel are not adequately addressed in the workplace and of any other concerns that they have regarding the program; and,
- Informing their supervisor of need for a medical reevaluation.

12.2 Hazards and Respirator Selection

Respirators will be selected based on chemical hazards (Section 5.4), action levels for the airborne constituents at this site (Table 12), air monitoring results (Section 7), and NIOSH respirator recommendations presented in the OSHA OCD reports in Appendix C – Chemical Information and Safety Data Sheets. The respiratory hazards anticipated during the ISTR application and associated respirator selection are presented in Table 17. Only respirators certified by NIOSH may be used. The assigned protection factors found in 29 CFR 1910.134(d)(3)(i)(A) must be used when selecting a respirator to meets or exceed the required level of protection. All filters, canisters, and cartridges to be used onsite must be labeled and color coded with a legible NIOSH approved label.

Table 17: Anticipated respiratory hazards and respirator selection

Activities	Hazards	Action Levels	Respirator Selection
• Mobilization • Subsurface installation • Aboveground installation • Acceptance testing • Operations • Sampling • Demobilization	VOCs and other chemicals listed in Appendix C	≤ 0.5 ppm	• Routine engineering controls
		> 0.5 to ≤ 25 ppm	• Full-facepiece, air-purifying, canister-equipped respirator with appropriate cartridges for known contaminants (OV/P100)
		> 25 ppm	• Self-contained breathing apparatus that has a full facepiece and is operated in a pressure-demand or other positive-pressure mode • Escape: Full-facepiece, air-purifying, canister-equipped respirator with appropriate cartridges for known contaminants (OV/P100)
• Mobilization • Subsurface installation • Aboveground installation • Acceptance testing • Operations • Sampling • Demobilization	Vinyl chloride	≤ 1.0 ppm	• Routine engineering controls
		> 1.0 to ≤ 10 ppm	• Full-facepiece, air-purifying, canister-equipped respirator with appropriate cartridges for known contaminants (OV/P100)
		> 10 ppm	• Self-contained breathing apparatus that has a full facepiece and is operated in a pressure-demand or other positive-pressure mode • Escape: Full-facepiece, air-purifying, canister-equipped respirator with appropriate cartridges for known contaminants (OV/P100)

Activities	Hazards	Action Levels	Respirator Selection
• Mobilization • Subsurface installation • Aboveground installation • Acceptance testing • Operations • Sampling • Demobilization	Particulates (silica, crystalline)	≤ 0.05 mg/m3	• Routine engineering controls
		> 0.05 to ≤ 0.5 mg/m3	• Particulate respirator equipped with an N95, R95, P95 filter or higher (except quarter-masks)
		> 0.5 to ≤ 2.5 mg/m3	• Air-purifying, full-facepiece respirator equipped with an N100, R100, P100 filter
		> 2.5 mg/m3	• Self-contained breathing apparatus that has a full facepiece and is operated in a pressure-demand or other positive-pressure mode • Escape: air-purifying, full-facepiece respirator equipped with an N100, R100, P100 filter

Note: O2, CO, H2S, and LEL conditions outside the action levels of Table 13 are not anticipated during the ISTR application, but will be monitored as deemed necessary by the SSHO.

In general, Mc² personnel are not trained to use atmosphere-supplying respirators, and if needed, will instead contract with a third party that specializes in its use. Third parties must provide applicable documentation of their own respiratory protection program, including training, inspection, and procedures to ensure adequate air quality, quantity, and flow of breathing air for atmosphere-supplying respirators.

12.3 Medical Evaluations

Personnel must pass a medical evaluation before being permitted to wear a respirator. The physician or other licensed health care professional (PLHCP) who will perform these evaluations is CannAmm, or another equivalent medical services provider. Medical evaluation procedures will be performed in accordance with the requirements of 29 CFR 1910.134(e), including the need for any follow-up examinations. Written recommendations for respirator use will be maintained on an offsite server by the respiratory protection program administrator.

12.4 Fit Testing Procedures

Personnel using tight-fitting respirators will be fit tested in accordance with the requirements of 29 CFR 1910.134(f) using either qualitative or quantitative procedures. Fit testing must be performed in the same make, model, style, and size of respirator that will be used onsite. Fit testing documentation will be maintained on an offsite server by the program administrator.

12.5 Respirator Use

Respirators will be used in accordance with the requirements of 29 CFR 1910.134(g). In addition to general surveillance to evaluate continuing respirator effectiveness, specific requirements include:

- Facial hair that comes between the sealing surface of the facepiece and the face or that interferes with valve function, or any condition that interferes with the face-to-facepiece seal or valve function, is prohibited while wearing a respirator;
- Corrective lenses may not interfere with respirator function, and the use of contact lenses with a respirator in a contaminated atmosphere is prohibited, per 29 CFR Part 1910.134(e)(51)(ii);
- For tight-fitting respirators, personnel must perform a seal check each time they put on the respirator, using either of the following procedures:
    - *Positive Pressure Check* – Close off the exhalation valve and exhale gently into the facepiece. The face fit is considered satisfactory if a slight positive pressure can be built up inside the facepiece without any evidence of outward leakage of air at the seal. For most respirators this method of leak testing requires the wearer to first remove the exhalation valve cover before closing off the exhalation valve and then carefully replacing it after the test.
    - *Negative Pressure Check* – Close off the inlet opening of the canister or cartridge(s) by covering with the palm of the hand(s) or by replacing the filter seal(s), inhale gently so that the facepiece collapses slightly, and hold the breath for ten seconds. The design of the inlet opening of some cartridges cannot be effectively covered with the palm of the hand. The test can be performed by covering the inlet opening of the cartridge with a thin latex or nitrile glove. If the facepiece remains in its slightly collapsed condition and no inward leakage of air is detected, the tightness of the respirator is considered satisfactory.
- Leaving the respirator use area, as well as repairing or replacing the respirator before returning to the use area, when:
    - Detecting vapor or gas breakthrough, changes in breathing resistance, or leakage of the facepiece;
    - Replacing the respirator or the filter, cartridge, or canister elements; or,
    - Washing the face or respirator facepiece; and,

12.5.1 Inspection

Respirators will be inspected prior to each use to make sure they have been adequately cleaned, after each use, during cleaning, and monthly if in storage for emergency use. For air-purifying respirators, this includes:

- Checking elastomeric parts for signs of pliability, deterioration, and distortion;
- Checking respirator function, tightness of connections, and the condition of the various parts including, but not limited to, the facepiece, head straps, valves, connecting tube, and cartridges, canisters or filters;
- Checking lenses and face shields for cracks, crazing, and fogginess; and,
- Examining cartridges or canisters to ensure they are the proper type for the intended use and the expiration date has not passed.

Any respirator that fails an inspection will be removed from service and discarded.

12.5.2 Storage

Respirators will be stored to protect them from damage, contamination, dust, sunlight, extreme temperatures, excessive moisture, and damaging chemicals, and will be packed or stored to prevent deformation of the facepiece and exhalation valve.

12.5.3 Cleaning and Disinfecting

Respirators will be cleaned and disinfected as often as necessary to maintain a sanitary condition using the following procedure:

- Disassemble respirator, removing any filters, canisters, or cartridges;
- Wash the facepiece and associated parts in a mild detergent with warm water;
- Rinse completely in clean warm water;
- Wipe the respirator with isopropyl alcohol disinfectant wipes to kill germs;
- Air dry in a clean area;
- Reassemble the respirator and replace any defective parts; and,
- Place in a clean, dry plastic bag or other airtight container.

12.6 Respirator Training

After their initial hiring, and annually thereafter, the program administrator will train respirator users and their supervisors on the contents of this program and 29 CFR 1910.134. This includes the proper use of respirators, including putting on and removing them, inspecting them, any limitations on their use, including medical signs and symptoms that may limit or prevent the effective use, and their storage and maintenance. Personnel will also be trained in how to use the respirator effectively in emergency situations, including situations in which the respirator malfunctions.

12.7 Program Evaluation

The program administrator will conduct periodic evaluations to ensure that the provisions of this program are being implemented. These evaluations will include (i) regular consultations with personnel who use respirators and their supervisors, (ii) site inspections, (iii) air monitoring, and (iv) a review of records. Factors include:

- Respirator fit (including the ability to use the respirator without interfering with effective performance);
- Appropriate respirator selection for the hazards to which the employee is exposed;
- Proper respirator use under the conditions the employee encounters; and,
- Proper respirator maintenance.

Problems identified will be noted in an inspection log and corrected by the program administrator. These findings will be reported to management, and the report will list plans to correct deficiencies in the respirator program and target dates for implementing those corrections.

12.8 Documentation and Recordkeeping

A written copy of this program will be kept onsite and is available to all personnel who wish to review it. Copies of training materials, fit test records, and a list of all persons covered under the respirator program will be maintained by the program administrator. Records of medical evaluations required by this section must be retained and made available in accordance with 29 CFR 1910.1020.

13. Spill Containment Program

The purpose of this section is to provide guidance for spill prevention and response, in accordance with the requirements of 29 CFR 1910.120(b)(4)(ii)(j). This program will be reviewed by personnel who may come into contact with untreated liquids as part of the pre-entry briefing and HASP acknowledgement (Appendix E – Site Safety Forms).

13.1 Potential Spills

Based on current site conditions and the planned cleanup activities, there may be a potential for spills to occur from the following of sources:

- Contaminated soil, groundwater, and product recovered during drilling, construction, operations, sampling, and demobilization activities;
- Chemicals used for preventative maintenance of the treatment system, such as demulsifier, descaler, biocide, biodispersant, flocculant, or coagulant;
- Spent filtration media or other treatment system consumables; and,
- Gasoline, diesel, and other fluid leaks or spills from vehicles or heavy equipment.

In particular, hazardous materials may be collected in treatment system components, transfer piping, and storage tanks. Specific components that may contain hazards materials and their anticipated locations are presented in the RDR deliverable. If a steam regenerative granular activated carbon system is present, additional precaution is warranted for components that process or store product and/or condensate.

If site conditions change such that there is the potential for other spills to occur, these must be communicated by the SSHO to the Project Engineer and Operations Manager.

13.2 Spill Prevention

Preventative spill containment will be accomplished through the installation of double containments and/or spill pallets beneath treatment system components that may contain or transfer untreated liquids, including drums and totes. The treatment equipment will be outfitted with various level sensors to trigger pumps on and off, and to shut off the system in case of an overflow condition. Double containments will also be instrumented to shut off the system in the event of a leak or spill.

Personnel must minimize the potential for a spill to occur, using work practices such as:

- Leak, pressure, and/or vacuum testing components prior to use;
- Pinning or zip-tying cam-and-groove or other quick connect fittings shut;
- Performing treatment system maintenance only above secondary containment;
- Only opening up the well field piping while the system is under vacuum; and,
- Staging components on solid surfaces, within containment, in areas of low traffic.

Personnel must also conduct regular inspections to verify the absence of:

- Bulging, corroding, or fatigue of any tanks, vessels, drums, or piping;
- Leaking of any transfer line connections, seals, or gaskets;
- Leaking of any unopened valves; and,
- Poor housekeeping.

The handling of hazardous materials is discussed further in Section 14.

13.3 Spill Response

The OSHA OCD reports in Appendix C – Chemical Information and Safety Data Sheets contain spill response guidelines for the potential contaminants known or suspected of being present at the site, as identified in AECOM (2019). Firefighting guidelines are also presented in Appendix C – Chemical Information and Safety Data Sheets. Personal safety is the primary consideration in spill response. Site personnel must take every precaution necessary to protect themselves before engaging in spill response.

13.3.1 Notification

Any spill of a hazardous substance must be immediately reported to other site personnel and the SSHO, who will relay the information to the Project Engineer. Information will include: (i) the type and quantity of spilled material, (ii) its location, extent, and direction of flow, and (iii) any related fire or explosion incidents. All site personnel must immediately vacate the area where the spill occurred. If anyone is seriously injured, immediately contact emergency medical services.

13.3.2 Response

The SSHO or designee will determine whether the spill is incidental or if an emergency response is required, following the response guidelines in the OSHA OCD reports in Appendix C – Chemical Information and Safety Data Sheets. If it is safe to do so, and given that site personnel have an appropriate level of training, PPE available, and knowledge of the substance, they may provide response actions that do not endanger themselves or others, such as:

- Donning the appropriate level of PPE for the response;
- Removing ignition points if fire or explosion hazards exist;
- Shutting off the controlling equipment, pumps, and/or valves;
- Blocking drains or other receptors within the path of the spill;
- Using a spill kit to impede the spill from spreading further;
- Using absorbent or neutralizing materials on the spill;
- Removing and drumming any associated wastes; and,
- Performing any decontamination procedures necessary.

If an outside emergency response firm is contracted to clean up the spill, the SSHO and Project Engineer will provide them with the relevant information.

13.3.3 Disposal

Spent equipment or other wastes generated during the containment of a spill must be managed in accordance with any relevant federal, state, and local regulations (e.g., RCRA). Generally, materials that have been in contact with untreated liquids will be drummed, placed into double containment, and made available for hazardous waste characterization and appropriate disposal by the engineering consultant or site owner. Applicable decontamination procedures must also be followed.

13.3.4 Reporting

Any spill of a hazardous substance must be reported to the project team as soon as it is safe to do so. Information will include: (i) the type and quantity of spilled material, (ii) its location, extent, and direction of flow, (iii) any related fire or explosion incidents, (iv) the time and length of the release, (v) response measures taken, (vi) wastes generated, and

(vii) any identified cause(s) of the spill or release. Based on the information provided, the project team will determine if reporting to federal, state, and/or local agencies is required.

13.4 Equipment and Materials

A spill kit will be available in the job trailer, and may include granular absorbent, absorbent pads and socks, disposal bags, seals, salvage drums, nitrile gloves, goggles, and/or shovels. An ABC fire extinguisher will also be available onsite. A water spraying kit may also be useful for some constituents to reduce vapors or divert vapor cloud drift. Any equipment used in a spill response must be replaced.

13.5 Potassium Permanganate

For smaller releases of permanganate solution, such as those that may occur when potassium permanganate impregnated zeolite media comes into contact with water, a solution using equal parts water, vinegar, and 3% hydrogen peroxide may be used to neutralize diluted solutions or remove stains.

13.6 Post-Spill Evaluation

After a spill response is performed, all associated information must be documented for recordkeeping, including the items described in Section 13.3.4., and the area impacted by the release will be inspected and/or sampled to ensure that it has been cleaned. A written root cause analysis will be prepared by the project team, including input from applicable subcontractors or vendors, and any corrective measures identified in the analysis will be implemented.

14. Handling Hazardous Materials

Hazards substances, contaminated liquids, and other residues will be handled, transported, labeled, and disposed of in accordance with the requirements of 29 CFR 1910.120(j). Drums and containers used for handling hazardous substances must meet the requirements of OSHA (e.g., 29 CFR 1910 and 1926), Environmental Protection Agency (EPA) (e.g., 40 CFR 264-265 and 300) and Department of Transportation (DOT) regulations (e.g., 49 CFR 171-178). It is assumed that site characterization has been performed by others prior to the ISTR application so that the contents of all drums and containers are known, and it is not radioactive, explosive, or shock-sensitive.

14.1 General Requirements

Drums and containers must be labeled and inspected at least once a week to verify they are not deteriorating or leaking. Defective containers must be immediately emptied of their contents, and transferred into containers in good condition using materials that are compatible with the hazardous waste. As described in Section 13.4, a spill kit and fire extinguisher will be available onsite in areas where spills, leaks, or ruptures may occur. A suitable eye wash facility and/or safety shower should be immediately available in the near proximity to operations presenting a potential splash exposure.

Drums and containers used to store hazardous waste will be made of or lined with materials that will not react with and are otherwise compatible with the waste in the container. Incompatible wastes and materials must not be placed in the same container. Drums and containers will be staged within secondary containment in areas that provide adequate access and egress routes. Any liquids accumulated in secondary containment must be removed in a timely manner as necessary to prevent overflow.

14.2 Opening Vessels

Although it is assumed that the contents of all drums and containers are known, site personnel must still use caution prior to opening them, and always keep them closed except when waste is added or removed. While opening drums and containers, a minimum of Level C PPE must be used, air monitoring must be performed, and personnel not actively involved in opening drums or containers must keep a safe distance away. When there is the potential for flammable atmospheres being present, material handling equipment and hand tools must be of the type to prevent sources of ignition. If possible, a slight vacuum from the treatment system should be applied to the headspace above the drum or container to control any fugitive vapors.

14.3 Handling Vessels

To the extent feasible, the moving of containers and drums will be kept to a minimum, with the lid securely closed, using tools or equipment that prevent any kind of tipping, spilling, dropping, warping, perforating, or ignition of the container or its contents. Bulging drums or drums with crystalline material on the outside should be handled with extreme caution using a grappler that is constructed for explosive containment. Prior to shipping, drums and containers must be classified, labeled, and packaged appropriately.

14.4 Transferring Between Vessels

Product (i.e., Non-Aqueous Phase Liquid (NAPL), free phase) transfers may be performed on occasion between containment vessels during cleanup operations. Materials compatibly between the product, containers, and transfer materials must be established

prior to performing the transfer. Before starting the product transfer, each vessel or line that will contain product must be both (i) leak tested and (ii) vacuum/pressure tested at a condition further from atmospheric pressure than that which will occur during the transfer. All connections must be zip-tied or pinned shut above secondary containment.

Product transfers into totes will be driven with a double diaphragm pump, using a stinger tube inserted into the product holding tank, taking care not to collapse it under vacuum, and a hose secured to the tote into which the transfer is taking place. The top of the tote will have an additional hose to manage any fugitive vapors, under which a slight vacuum is applied from the treatment system. Water should be flushed through the transfer line after it is completely evacuated. Totes will be staged on pallets within secondary containment for removal by a third-party contractor using a forklift when shipping offsite.

Product transfers into drums will be driven with the system vacuum, using a similar setup. The drum will be completely sealed, taking care not to collapse it under vacuum, with product entering into it through one hose, and vacuum applied at another hose that is connected to an upstream vacuum tank in the treatment system. Extreme care must be taken not to overfill these drums. Drums will be staged within secondary containment for removal by a third party contractor using a drum grappler when shipping offsite.

15. Emergency Response

Emergency response at the site will comply with the requirements of 29 CFR 1910.120(l). In the event of an emergency, personnel will follow the requirements and provisions of this emergency response plan, and the emergency response plan prepared by the engineering consultant.

15.1 Pre-Emergency Planning

Possible emergencies that may occur at the site include uncontrolled chemical releases, fires, natural disasters, damage to property, and exposure, injury, or electrocution of personnel. Contact information for emergency services such as fire, police, and medical aid is presented in Table 1. If needed, a site walk can be arranged with any interested emergency service providers prior to startup to review the processes and shutdown procedures associated with the ISTR application.

15.2 Personnel Roles

Roles, lines of authority, and communication during an emergency will be consistent with those outlined in Section 3. The SSHO will coordinate with local emergency services onsite during the response. Training for emergency response will be consistent with the requirements of 29 CFR 1910.120(l), including a review of potential emergencies and response procedures prior to performing work at the site. Signature of the HASP acknowledgement (Appendix E – Site Safety Forms) indicates that training of site personnel in the above topics has been completed on the date specified.

15.3 Recognition and Prevention

Site personnel should be constantly alert to recognize signs and symptoms of potentially hazardous situations. Rapid recognition of dangerous situations can avert an emergency. During the daily job hazard analysis meeting, personnel should discuss:

- Planned activities to be performed;
- Time or physical constraints associated with these activities;
- Hazard that may be encountered, including their effects, how to recognize symptoms or monitor them, concentration limits, or other danger signals; and,
- Applicable emergency procedures.

15.4 Emergency Procedures

In case of an emergency, the treatment system will be shut off using the following procedure:

- Depress the STOP button on the treatment system panel. This will shut off active treatment system components (e.g., pumps, blowers); and,
- Inform the SSHO of the shutdown.

Emergency shutdown should be performed in the following situations, if an ESD device can be accessed safely:

- Fire – Contact the fire department immediately, and inform them of the potential for an electrical fire. Because fire in the may be electrical, personnel must NOT attempt to put out a fire with a foam fire extinguisher.

- Serious injury – The cause of the injury may be related to the ISTR system, and the ESD switch should be activated to eliminate electrical hazards in the well field. This will also permit safe access for emergency responders.
- Well field hazard – If a hazardous condition such as electrical arcing is observed, the ESD button should be activated.

For uncontrolled releases or fires involving chemicals or hazardous substances, the guidelines in the OSHA OCD reports in Appendix C – Chemical Information and Safety Data Sheets should be used in conjunction with the Spill Response Program (Section 13). Only personnel with proper training may attempt to control an incipient fire and isolate nearby flammable materials.

Rescue personnel must not touch an electrocution victim who is still in contact with a live conductor, and instead must turn off power feeding the conductor with a non-conductive object, as well as use other specific equipment necessary for electrical rescue (e.g., non-conductive rescue hook). Prior to any confined space entry, the third-party contractor performing the entry must have emergency procedures in place that comply with applicable federal, state, and local regulations, and follow these procedures if a rescue is required. Only personnel with sufficient training may approach an electrocution victim or rescue a victim in a confined space, in accordance with established procedures.

15.5 Safe Distances and Places of Refuge

For uncontrolled chemical releases, the OSHA OCD reports in Appendix C – Chemical Information and Safety Data Sheets should be used as a guideline to establish safe distances, standing upwind and keeping out of low areas. The SSHO will determine the safe distance at the time of the emergency, based on the size of the release, the wind direction, and other site-specific factors. In general, the Mc² job trailer can be used as a place of refuge, so long as it not a hazardous environment or represent some other dangerous condition.

15.6 Site Security and Control

Site security will be established by constructing a perimeter fence with access and egress points that control the flow of traffic into potentially hazardous areas. If site work zones are established, the SSHO will ensure that they will be clearly demarcated and have defined access and egress points to control access.

15.7 Evacuation

Evacuation routes to reach a designated assembly area are presented in Appendix A – Figures. An accounting of site personnel will be performed upon arrival at the assembly area. In the event that someone is missing, that person will be contacted by cellular telephone, and if unaccounted for, emergency responders will be informed.

15.8 Emergency PPE and Equipment

Emergency PPE and equipment that will be stored in the job trailer and available for use in the event of emergency includes:

- First-aid kit with PPE for blood borne pathogens;
- Portable eyewash station;
- ABC fire extinguisher;
- Spill kit suitable for small releases; and,

- Cellular telephone.

15.9 Decontamination Procedures

In an emergency, the primary concern is to prevent the loss of life or severe injury to site personnel. If immediate medical treatment is required to save a life, decontamination should be delayed until the victim is stabilized. If decontamination can be performed without interfering with essential life-saving techniques or first aid, or if a worker has been contaminated with an extremely toxic or corrosive material that could cause severe injury or loss of life, decontamination must be performed immediately. Standard decontamination procedures should be used where possible. If an emergency due to a heat-related illness develops, protective clothing should be removed from the victim as soon as possible to reduce the heat stress. During an emergency, work practices must also allow for protecting medical personnel and correctly disposing of contaminated clothing and equipment.

15.10 Medical Treatment and First Aid

Site personnel will establish and maintain contact with emergency medical personnel, such as hospitals, ambulances, or poison control (e.g., Table 1) to coordinate medical treatment and first aid. Individuals who have active First Aid/CPR refresher training may provide on-the-spot treatment. Standard first aid supplies listed in Section 15.8 will be located in the job trailer, or as otherwise communicated to site personnel by the SSHO. The OSHA OCD reports in Appendix C – Chemical Information and Safety Data Sheets also contain medical treatment and first aid guidelines for the potential contaminants known or suspected of being present at the site, as identified by AECOM (2019).

15.11 Alerting and Response Procedures

Personnel across the site will be informed of an emergency situation by use of a vehicle horn or air horn for a prolonged period. Any person may implement an emergency alert. In addition, verbal communication and cellular telephone will be used to inform both site personnel and outside emergency responders of the nature and hazards surrounding the emergency. Upon hearing an emergency alert, site personnel will evacuate to the designated assembly area or place of refuge, if it is safe to do so.

15.12 Critique of Response and Follow-Up

Following an emergency, a critique of the response will be conducted between the Project Manager, SSHO, Operations Manager, senior management, and the engineering consultant. The emergency response plan will also be reviewed and updated, and site personnel will undertake additional training if necessary, based on the findings from this critique.

16. Recordkeeping

16.1 Site Safety Forms

Original site safety forms and monitoring logs (Appendix E – Site Safety Forms) will be maintained onsite and scanned electronic versions will be maintained on an offsite server. These include:

- HASP Acknowledgement;
- Site Visitor Logbook;
- Daily Job Hazard Analysis;
- PID Calibration Log;
- Air Monitoring Log;
- Site Work Zone Log;
- Skid Steer/Telehandler Inspection Checklists;
- Lockout-Tagout Form; and,
- Incident/Near Miss Report Form.

Scanned electronic versions must be sent to Mc² offices at the end of each day, and all originals will be sent to Mc² offices at the end of the project.

16.2 Field Notes

Personnel should record all site activities and observations in a bound field journal with consecutively numbered pages. Entries should be made during or just after completing a task to ensure thoroughness and accuracy. Daily reports in the field journal should consist of the sections presented in Table 18**:** Daily report format. Any notes taken during sampling that supplement information in the chain of custody should also be documented in the field journal. Photographs can be taken to supplement field observations. Scanned electronic versions of field notes must be sent to Mc² offices at the end of each day, and all originals will be sent to Mc² offices at the end of the project.

16.3 Training

Mc² training records will be maintained on an offsite server. Subcontractors, vendors, and other personnel engaged in the ISTR application must maintain their own training records and be able to provide them upon request. Records of site-specific training will be maintained via signature of the HASP acknowledgement (Appendix E – Site Safety Forms).

16.4 Medical Surveillance

Confidential medical surveillance records will be maintained on an offsite server, and can be made available to OSHA upon request. Access to medical records will be performed in accordance with the requirements of 29 CFR 1910.1020.

16.5 Accident Reporting

All incidents that result in injury or property damage, and all near misses with the potential for serious injury or property damage must be reported immediately to a supervisor. An Incident/Near Miss Report Form (Appendix E – Site Safety Forms) must be completed and submitted by the supervisor and affected employee(s) to senior management immediately. This will ensure timely submission to OSHA or for workers compensation, if required. Each

incident will be analyzed to determine the cause and contributing factors. The investigation will be used to reduce or eliminate the risk of a further incident.

Table 18: Daily report format

Project/Client	
Location	
Date	
Weather	
Personnel	
Equipment	
Objectives	
Time	Observation
Action Items	

17. References

AECOM, 2019. Public Works Yard Predesign Investigation Report, Roxana, Illinois.

ARAMCO Expats, 2018. Heat Index Chart. Accessed December 21, 2018. https://imgsrv2.aramcoexpats.com/community/pakistan/pdf_Heat-Index-Chart.pdf

Canadian Network for the Detection of Atmospheric Change, 2018. Environment Canada Wind Chill Chart. Accessed December 21, 2018. http://www.candac.ca/candac/Outreach/Teacher_Resources_Index/tri/31.pdf

INDOT, 2013. Indiana Department of Transport Work Zone Traffic Control Guidelines. Accessed January 30, 2018. http://www.in.gov/indot/files/ WorkZoneTCH.pdf

NIOSH/OSHA/USCG/EPA, 1985. Occupational Safety and Health Guidance Manual for Hazardous Waste Site Activities. Accessed August 2, 2016. https://www.osha.gov/Publications/complinks/OSHG-HazWaste/all-in-one.pdf

NFPA 70E, 2015. Standard for Electrical Safety in the Workplace.

OSHA, 2002. Hand and Power Tools Booklet. OSHA 3080. Accessed March 22, 2018. https://www.osha.gov/Publications/osha3080.pdf

OSHA, 2011. Small Entity Compliance Guide for the Respiratory Protection Standard. OSHA 3384-09 2011.

OSHA, 2017. Regulation 29 CFR 1910 Occupational Safety and Health Standards. Accessed December 28, 2017. https://www.osha.gov/pls/oshaweb/owasrch.search_form?p_doc_type=STANDARDS&p_toc_level=1&p_keyvalue=1910

OSHA, 2017. Regulation 29 CFR 1926. Safety and Health Regulations for Construction. Accessed December 28, 2017. https://www.osha.gov/pls/oshaweb/owastand.display_standard_group?p_toc_level=1&p_part_number=1926

Appendix A – Figures

1. Site Map
    - Access Points
    - Evacuation Routes
    - Muster Point
2. Roxana Public Works Yard Target Treatment Zones
    - Well Field Layout (WFL-01)


E 7th St
S Chaffe
111
Muster Point
Egress Points
E 8th St
Old Edwardsville Rd
Village of Roxana
Roxana Public Works Yard
E Rand Ave

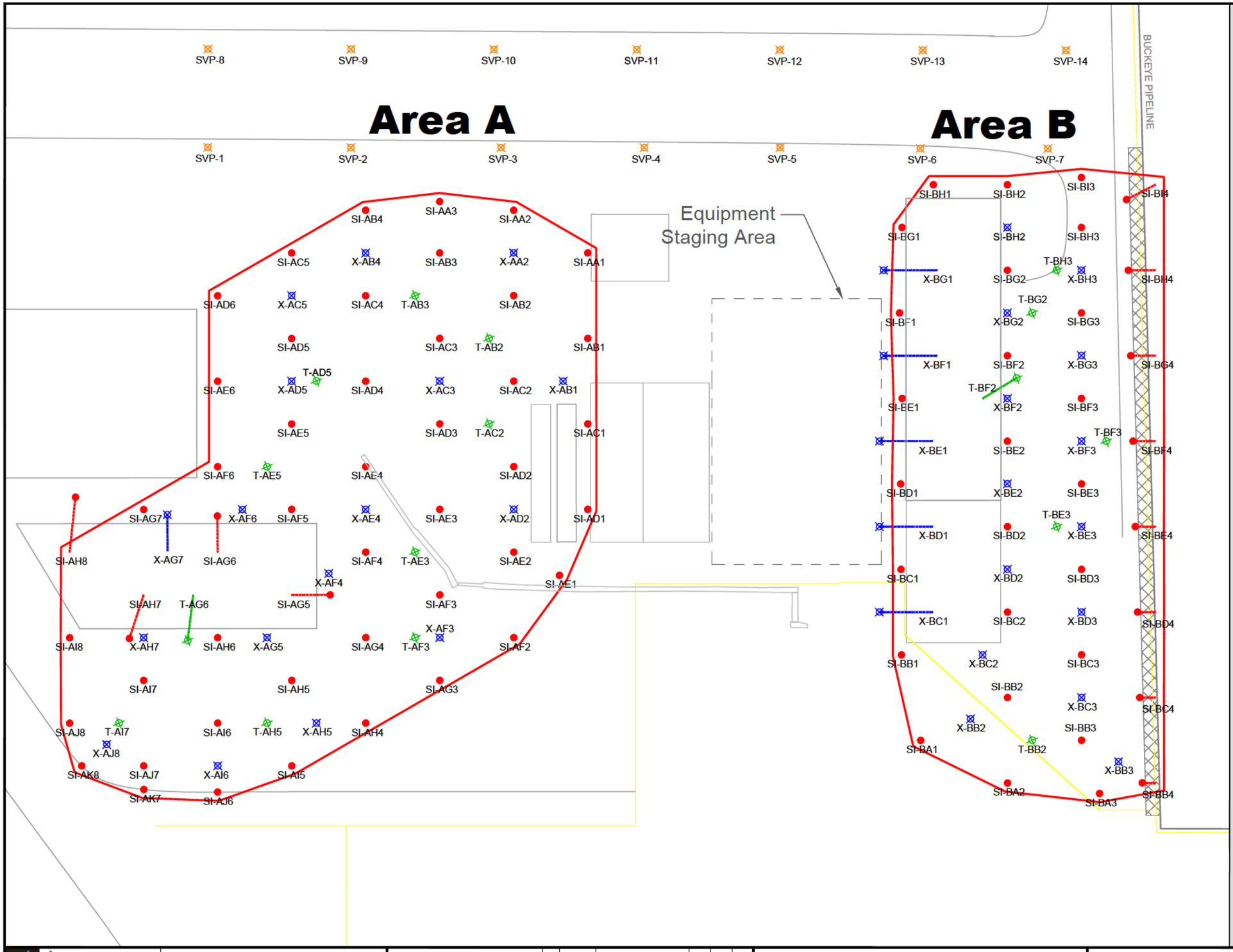

LEGEND

Area A
- Steam Injection Well [48]
- Multiphase Extraction Well [17]
- Temperature Sensor Well [10]
- Thermal Influence (28,060 sq. ft)

Area B
- Steam Injection Well [33]
- Multiphase Extraction Well [19]
- Temperature Sensor Well [6]
- Thermal Influence (20,144 sq. ft)

General
- Buckeye Pipeline
- 5 ft Pipeline Drilling Offset
- Vapor Monitoring Well [14]

NOTES:

1. STEAM WELLS REQUIRE MIN. 4" BORING.
2. EXTRACTION WELLS REQUIRE MIN. 8" BORING.
3. SENSOR WELLS REQUIRE MIN. 4" BORING.
4. PIPELINE LOCATION PROVIDED BY AECOM.
5. VAPOR MONITORING POINTS TO BE INSTALLED BY OTHERS.

N

0 25 50
SCALE IN FEET

McMILLAN-McGEE CORP.
ELECTROMAGNETIC SYSTEMS AND SERVICES FOR THE ENERGY AND ENVIRONMENTAL INDUSTRIES
4895 - 35B STREET SE
CALGARY, AB T2B 3M9 CANADA
WWW.MCMILLAN-MCGEE.COM
PH: 403.569.5100, FX: 403.272.7201

LPE

DATE

REV.	DATE (D/M/Y)	DESCRIPTION	DRAWN BY	ORG/ ENGR	Aproved Dist.
C2	2022/10/28	100% RDR ADDENDUM	JS	JS	CC
C1	2022/01/07	100% DESIGN	JS	CC	CC
B5	2021/12/02	FINALIZE TREATMENT AREA B	JS	CC	CC
B4	2021/10/29	INCORPORATE 90% COMMENTS	JS	CC	CC
B3	2021/09/28	90% DESIGN	JS	CC	CC
B2	2021/09/03	MOVED SI-AA3	JS	CC	CC

APEGA PERMIT NUMBER: P09178 — SCALE: NOT TO SCALE

TITLE: **Well Field Layout**

CLIENT: **AECOM**

PROJECT: **Roxana Public Works Yard**
Roxana, Illinois

SHEET: **WFL-01**

Appendix B – Job Safety Analysis (JSA) Procedures

1. Air Stripper Inspection and Cleaning
2. Bag Filter Change Out
3. Energize / De-Energize Breakers
4. Extraction Well Determination of Flow Rate
5. Extraction Well Vapor Flow Readings
6. Hot Groundwater Sampling
7. Hot Soil Sampling
8. Media Change Out
9. OWS Inspection and Cleaning
10. Pipe Decontamination, Cutting, and Disposal
11. Single Source Lockout-Tagout (LOTO)
12. Slurper Tube Removal and Replacement
13. Steam Operation
14. Temperature and Pressure Sensor Replacement
15. Vessel Opening and NAPL Measurement

JOB SAFETY ANALYSIS

Project:	Roxana Public Works Yard	*Page: 1 of 4*
Job:	Air Stripper Inspection and Cleaning	
Risk:	Significant Risk Task	

Revision No. JSA-MC2-ASIC-2016-07	JSA Type: Treatment equipment maintenance
Revision Date: July 14, 2016	Task Type: Air stripper inspection and cleaning
Approved Date:	Affected Position: Treatment system operator

PPE	**Personal Protective Equipment**	
Type	**Personal Protective Equipment**	**Description**
Respiratory Protection	Respirator	Full face respirator w/ organic vapor carbon canisters, complete seal around face
Eye Protection	Safety glasses Full face respirator Face Shield	Primary PPE to be exchanged for full face respirator Full face respirator covering eyes and sealing to face required Face shield to be used when pressure washing air stripper components
Dermal Protection	Tyvek suit	Long sleeve long pant hooded
Foot Protection	Steel-toe rubber boots	Chemical resistant full rubber boot with electrically isolated soles (EH rated)
Head Protection	Hard hat	ANSI type 1 class E
Hand Protection	Work gloves Chemical resistant gloves	Primary PPE to be exchanged with chemical resistant gloves Gauntlet cuff
Air Space Monitor	PID	Photo ionization detector
Ear Protection	Ear plugs or muffs	NRR 33 dB or greater
Worker Visibility	Reflective vest	ANSI class 1 minimum

Supplies		
Type	**Supply**	**Description**
Engineering Control	Fan	120VAC Box Fan or equivalent capable of circulating 2500 cfm
	Building panel	Removable building wall panels
	Waste disposal drum	Properly identified/labeled waste disposal drum (for PPE, decon, and dry waste)
Tools	Adjustable wrench	Adjustable span wrench or “Crescent” wrench
	Adjustable grip pliers	Adjustable grip pliers or “Channel Lock” pliers
	Adjustable ladder	A-Frame folding
	Ratchet	3/8” or ½” drive ratcheting wrench
	Sockets	3/8” or ½” socket set (typical ½”-9/16” hardware)
	Screwdriver	Flathead & Phillips
	Temperature Gun	Infrared temperature sensor
	Drill driver	Cordless drill driver w/ 5/16” socket bit (hose clamp removal and tightening)
Material	Shop Towels	Disposable shop towels
Equipment	Pressure Washer	Gasoline or electric powered pressure washer
	Extension cord	Grounded extension cord
	Double diaphragm pump	Air operated double diaphragm pump w/ regulator
	Double containment tote	Containment tote for double diaphragm pump
	Hose w/ camlock fittings	Suction and discharge lines double diaphragm pump
	Clean water source	Treated water source for the cleaning of air stripper
	5 gallon bucket	Container
	Double containment	HDPE containment area
	Forklift	Forklift if necessary for disassembling air stripper trays and moving to containment
Communication	Mobile phone	

JOB SAFETY ANALYSIS

McMillan-McGee Corp	**Project:**	Roxana Public Works Yard *Page: 2 of 4*
	Job:	Air Stripper Inspection and Cleaning
	Risk:	Significant Risk Task

Job Steps

Job Step No.	Description		Potential Hazard	Critical Action	Reference
1	Pre-work Preparation	1	Contaminated Airspace	• Calibrate PID • Survey Airspace w/ PID • Survey PPE & Stage	McMillan-McGee's thermal system O&M Plan and associated JSAs
		2	Contaminated Workspace	• Survey PPE & Stage	
		3	Energy: Electrical, Chemical, Mechanical, Pressure, Heat, etc.	• Situational and positional awareness and alertness	
2	Tools	1	Damaged/Missing	• Assemble and inspect, stage near work area: ladder, adjustable wrench, ratchet, socket set, screwdriver, flashlight, etc.	
3	Building Access	1	Slip/Trip/Fall	• Inspect and familiarize self with work area and remove or clearly mark potential tripping/slipping hazards or items that may be run into along the walking paths between equipment	
4	Equipment Access & Building Ventilation	1	High concentration vapors	• Survey work area with properly calibrated PID • Position PID in work area	
		2	Constrained & Enclosed Workspace	• Remove building panels for equipment access • Use drill driver w/ 5/16" bit for hose clamps securing hasps on building corners.	
		3	Contaminated Workspace	• Remove building panels for building ventilation • Install fan blowing near air stripper and out building	
		4	Falling objects	• Position removed building panels in a location where they do not interfere with work • Place building panels where they will not be blown over by wind	
5	Equipment Setup	1	Loss of containment	• Select location for the pressure washing of air stripper trays	
		2	Pressurized Water	• Familiarize oneself with the operation of pressure washer • Never point pressure washer at a person • Never test the pressure of the washer by feeling the spray with hands. The pressure washer has the ability to cut through gloves and work boots and severely injure.	
6	Transfer Pump & Process Blower Shutdown	1	Electrical/Mechanical/Fluid Transfer	• Reduce or cease liquid well field extraction if necessary. If well field liquid extraction is to be stopped notify MC2 to adjust injection rate. • If more than 1 AS exists and it is possible to bypass flow into second AS see step 7A. • Turn off all transfer pumps upstream of air stripper. • Turn off AS blower. • Wait 15 minutes and confirm fluid transfer through vessels is complete. • Verify process pumps that can transfer liquid into air stripper are all off and fully close influent flow control valves on air stripper.	Process & Instrumentation Diagram
6A	Bypass Air Stripper	1	Electrical/Mechanical/Fluid Transfer	• Place AS #2 online by opening the influent flow valves.	

JOB SAFETY ANALYSIS

McMillan-McGee Corp	**Project:**	Roxana Public Works Yard *Page: 3 of 4*
	Job:	Air Stripper Inspection and Cleaning
	Risk:	Significant Risk Task

Job Steps

Job Step No.	Description		Potential Hazard	Critical Action	Reference
				• Ensure AS #2 transfer pump is on. • Ensure AS #2 air flow valve is open. • Close AS #1 influent flow valves on OWS intake manifold. • Close AS#2 air flow valve.	
7	Pump out Air Stripper	1	Contaminated Liquid	• Manually transfer remaining fluid in AS directly to downstream treatment • Monitor AS site glass and transfer pump pressure	
6	Don PPE	1	Vapor Inhalation	• Air monitoring should be performed with the breathing zone and work space. Check with the site health and safety plan for details on the site specific contaminants and action levels • Protect respiratory system with full face respirator	
		2	Contaminated Liquid Exposure	• Protect skin w/ Tyvek suit, rubber gloves, and rubber boots • Protect eyes, and face w/ full face respirator	
		3	Hot Liquid Exposure	• Monitor vessel temperature with temperature gun • Wait for vessel surface temperature to reach 85 degrees F before servicing vessel.	
9	Enter Building	1	High concentrations of hydrocarbon vapors.	• Don all service specific PPE prior to performing service	
10	Position Forklift/Ladder	1	Heavy Equipment Hazard Fall Hazard	• Use spotter when operating forklift • Use assistant to hold ladder	
11	Disassemble Air Stripper	1	Fall hazard from the use of ladder	• Inspect ladder prior to use. • Utilize ladder as needed to remove upper trays from air stripper. • Utilize proper ladder safety procedures to prevent falls.	
		2	Possibility of uncontrolled movement from overhead piping	• Climb ladder and secure piping of air stripper vapor outlet to forklift skids using a lifting strap, then loosen the Fernco couplings that support the piping. • Remove piping from top of air stripper and carefully lower to ground. • Piping shall have rigging in place to ensure no uncontrolled movement during lift. • Store piping in a location that does not interfere with ongoing work.	
12		1	Contaminated/Hot Liquid Exposure	• Remove the influent water hose connection on top of the air stripper • Take care to drain line away from personnel	
		2	Shifting load/crush point/pinch point	• Pick & rig load directly above center of gravity • Use caution in hoisting load	
		3	Potential for injury should load become unsecure	• 1 signal person instructing operator • Use industry accepted standard for rigging & hoisting	

JOB SAFETY ANALYSIS

McMillan-McGee Corp	**Project:**	Roxana Public Works Yard *Page: 4 of 4*
	Job:	Air Stripper Inspection and Cleaning
	Risk:	Significant Risk Task

Job Steps

Job Step No.	Description		Potential Hazard	Critical Action	Reference
13	Cleaning Air Stripper	1	Contaminated Liquid Exposure	• Wear safety glasses combined w/ face shield • Remove as much silt and scale buildup as possible • Use a screw driver of the correct diameter to clear holes in air stripper trays if necessary • Minimize splashing and spray past the secondary containment	
14	Re-installing Air Stripper	1	Shifting load/crush point/pinch point	• Reassemble air stripper using one signal person and one operator • Pick & rig load directly above center of gravity • Use caution in hoisting load	
		2	Potential for injury should load become unsecure	• 1 signal person instructing operator • Use industry accepted standard for rigging & hoisting	
		3	Improper reconnections	• Ensure all hoses and connections are secure • Fasten all screws, check all hardware for tightness • Pin all camlock connections	

JOB SAFETY ANALYSIS

Project:	Roxana Public Works Yard	*Page: 1 of 3*
Job:	Bag Filter Change-Out	
Risk:	Moderate Risk Task	

Revision No. JSA-Mc2-BFCO-2016-10	JSA Type: WCS maintenance
Revision Date: October 21, 2016	Task Type: Bag filter change-out
Approved Date:	Affected Position: SEE operator

PPE	**Personal Protective Equipment**	
Type	**Personal Protective Equipment**	**Description**
Head Protection	Hard hat	Type I, Class E, compat ble with face shield, ANSI Z89.1-2003 / CSA Z94.1-15
	Face shield	For splash protection when there is a risk of exposure to hot fluids
Foot Protection	Steel-toed boots	Electrical hazard (EH) rated, Grade 1, ANSI Z41.1-1999 / CSA Z195-14
Dermal Protection	Long sleeve shirt and pants	For protection against thermal exposure; coveralls can also be used
	Rain coat	For splash protection when there is a risk of exposure to hot fluids
Eye Protection	Safety glasses or safety goggles	With side shields, ANSI Z87.1-2010 / CSA Z94.3-07
Hand Protection	Electrical insulated gloves	Class 0, with outer leather protectors, 29 CFR 1910.137
	Thermal resistant gloves	Heavy-duty leather or rubber insulating
	Nitrile gloves	Required beneath outer gloves when there is risk of chemical exposure
Worker Visibility	High visibility safety vest	Class II or greater, ANSI 107-2015 / CSA Z96-15

Supplies		
Type	**Supply**	**Description**
Engineering Controls	Waste disposal drum	Correctly identified and labeled for management of wastes
Communication	Mobile phone	
Tools	Electrically isolated tools	Wrenches, pliers, ratchets, sockets, screwdrivers, drills, impact drivers, etc.
Miscellaneous	Volt meter	Stray voltage eliminator must be used on digital meters
	Step and touch testing apparatus	
	Photoionization detector (PID)	Cal bration to be performed prior to use
	Spare filter bags	
	5 gallon pail	
	Temperature gun	

Warnings		
Type	**Special Precautions**	**Action Requirement**
Lightning	Electrocution	No one is permitted in the well field during lightning and until 30 minutes after the last recorded strike.
Hot Surfaces	Third degree burns	Equipment only to be handled when temperatures are equal to or less than 50°C/122°F, or with appropriate PPE up to temperatures of 120°C/248°F.
Pressure	Impact injury	Equipment may be under pressure. Use only approved valves, fittings, regulators, etc. Ensure safety relief devices are functional prior to operation.
Contamination	Chemical exposure	Review site-specific health and safety plan and consult with onsite health and safety representative to determine air monitoring protocols, MSDS, PPE requirements, and engineering controls to mitigate risk of exposure.

Job Steps					
Job Step No.	**Job Step Description**		**Potential Hazard**	**Critical Action**	**Reference**
1	Pre-work preparation.	1	General	• Review general site operations and maintenance plan (O&M Plan).	• HASP • O&M Plan

				• Review site health and safety plan (HASP). • Review waste management procedures to control all waste being generated during decontamination procedures. • Review relevant McMillan-McGee JSAs: i. Step and Touch Potential Testing; ii. Y-Strainer Cleaning.	• Associated JSAs
		2	Slips, trips, and falls	• Inspect and familiarize self with work area. • Remove or mark potential tripping/slipping hazards that may be present in the work area. • Use care when stepping over or around cables, wires, pipes, and hoses.	
		3	Inclement weather • Cold stress (winter) • Heat stress and sun burns (summer)	• For colder weather, wear extra layers of warm, loose clothes, hat and scarf to cover face, ear and neck, and have cold-prevention liners worn under typical nitrile, work, or insulating gloves. • For hotter weather, consume enough water to stay hydrated, plan work/rest shifts, and apply sunscreen to prevent sunburn.	
		4	Damaged tools	• Gather and inspect tools prior to work.	
		5	Damaged PPE	• Gather and inspect PPE prior to work.	
2	Determine bag filter(s) to be changed out.	1	General	• A bag filter change-out will occur: i. After the first week of commissioning; ii. When a pressure difference between the inlet and outlet gauges is noted; iii. If fouling of the Y-Strainers is noted.	• JSA: Y-Strainer Cleaning
		2	Leak or release	• Any leaks that are detected must be contained and cleaned up. The water passing through the bag filter should be within allowable discharge standards. If the water is suspected to be contaminated, immediately contain the release, then stop work and contact McMillan-McGee for further instructions.	
2	Swap over the bag filter vessel in use, and perform the bag filter change-out.	1	Exposure to contaminants	• Review the latest data available from the discharge treated water samples, prior to breaking the process seal on any components of the injection system. • If this data is unavailable, or the water is suspected to be contaminated, a PID must be used to monitor the air within the breathing zone near where the process seal is broken. • PID monitoring is not required when potable water is being used to feed the water circulation systems.	• PID equipment manual
		2	Exposure to hot surfaces and fluids	• Unit feed water may be preheated, causing some fittings and piping to be warm or hot to the touch. • Don PPE – nitrile gloves, thermal resistant gloves, coveralls or long sleeve shirt and pants, and splash protection PPE if there is a risk of exposure to hot fluids. • Use a temperature gun to verify surface temperatures prior to touching. Thermal resistant gloves must be used if surface temperatures exceed 50°C/122°F.	

		3	Pressurized fluids	• Close the water inlet valve on the bag filter vessel requiring the filter change and allow the vessel to depressurize. • Once depressurized, close the water outlet valve on this vessel to isolate the unit. A pressure gauge is located at the top of each bag filter vessel. • Open the water outlet valve on the second bag filter vessel and then gradually open the water inlet valve to restore flow the water circulation system.	
		4	Exposure to water circulation system process water	• Don thermal resistant rubber gloves and face shield. • Open the top cap ring clamp on the bag filter vessel requiring the filter change. • Remove the spent bag filter and place in the 5-gallon pail. • Install the new bag filter, close the top cap, and tighten the ring clamp. • Inspect for leaks. • Dispose of the bag filter in accordance with approved waste management procedures. • If required, decontaminate equipment, PPE, and tools in accordance with approved site procedures.	

JOB SAFETY ANALYSIS

Project:	Roxana Public Works Yard	*Page: 1 of 2*
Job:	Energize / De-Energize Breakers	
Risk:	Moderate Risk Task	

Revision No. JSA-Mc2-EDB-2016-10	JSA Type: Electrical maintenance
Revision Date: October 21, 2016	Task Type: Energize/de-energize breakers
Approved Date:	Affected Position: SEE operator

PPE	**Personal Protective Equipment**	
Type	**Personal Protective Equipment**	**Description**
Head Protection	Hard hat	Type I, Class E, compat ble with arc flash PPE, ANSI Z89.1-2003 / CSA Z94.1-15
Foot Protection	Steel-toed boots	Electrical hazard (EH) rated, Grade 1, ANSI Z41.1-1999 / CSA Z195-14
Dermal Protection	Arc flash protection kit	Consult with McMillan-McGee for NFPA 70E Category / ASTM F1506
Eye Protection	Safety glasses or safety goggles	With side shields, ANSI Z87.1-2010 / CSA Z94.3-07
Hand Protection	Electrical insulated gloves	Class 0, with outer leather protectors, 29 CFR 1910.137
Worker Visibility	High visibility safety vest	Class II or greater, ANSI 107-2015 / CSA Z96-15

Supplies		
Type	**Supply**	**Description**
Communication	Mobile phone	
Miscellaneous	Volt meter	Stray voltage eliminator must be used on digital meters
	Step and touch testing apparatus	
	Lockout-Tagout (LOTO) kits	

Warnings		
Type	**Special Precautions**	**Action Requirement**
Lightning	Electrocution	No one is permitted in the well field during lightning and until 30 minutes after the last recorded strike.
Arc Flash	Burn and blast injuries	Energizing and de-energizing breakers is restricted to trained ET-DSP™ operators only. Consult with McMillan-McGee for NFPA 70E Category.
Energized Equipment	Electrocution	All personnel must be LOTO trained and place their personnel lock on LOTO box or Single Source Clasp.

Job Steps					
Job Step No.	**Job Step Description**		**Potential Hazard**	**Critical Action**	**Reference**
1	Pre-work preparation.	1	General	• Review general site operations and maintenance plan (O&M Plan). • Review site health and safety plan (HASP). • Review waste management procedures to control all waste being generated during decontamination procedures. • Review relevant McMillan-McGee JSAs: i. Step and Touch Potential Testing; ii. Single-Source Lockout-Tagout (LOTO); iii. PDS Shutdown and Startup.	• HASP • O&M Plan • Associated JSAs
		2	Slips, trips, and falls	• Inspect and familiarize self with work area. • Remove or mark potential tripping/slipping hazards that may be present in the work area. • Use care when stepping over or around cables, wires, pipes, and hoses.	

JOB SAFETY ANALYSIS

McMillan-McGee Corp	**Project:**	Roxana Public Works Yard *Page: 2 of 2*
	Job:	Energize / De-Energize Breakers
	Risk:	Moderate Risk Task

Job Steps

Job Step No.	Job Step Description		Potential Hazard	Critical Action	Reference
		3	Inclement weather • Cold stress (winter) • Heat stress and sun burns (summer)	• For colder weather, wear extra layers of warm, loose clothes, hat and scarf to cover face, ear and neck, and have cold-prevention liners worn under typical nitrile, work, or insulating gloves. • For hotter weather, consume enough water to stay hydrated, plan work/rest shifts, and apply sunscreen to prevent sunburn.	
		4	Damaged PPE	• Gather and inspect PPE prior to work.	
		5	Damaged electrical components	• Inspect electrical components for damage. Do not proceed if any electrical equipment appears to be damaged.	
2	De-energize the breaker.	1	Electrical hazard from energized equipment	• Remove load from the device. • Don arc flash protection kit per McMillan-McGee instructions, including electrical insulated gloves rated for the voltage of the equipment to be worked on. • Once the load has been removed, open the cabinet doors and stand off to the right hand side of the breaker to be de-energized. • Using the palm of your right hand, place it on top of the breaker handle. • Place left hand behind your back and with your face turned away, push the breaker handle down. • Close the cabinet doors. • Lockout-tagout the cabinet doors. • Doff arc flash protection kit and electrical insulated gloves.	• JSA: Single-Source Lockout-Tagout (LOTO)
3	Energize the breaker.	1	Electrical hazard from energized equipment	• Wa k the well field to make sure no tools or parts are leaning against the header pipe and ground and that the work area has been cleaned up prior to energizing the breaker. • All individuals must have completed their work and lockout-tagout must be removed. • Don arc flash protection kit per McMillan-McGee instructions, including electrical insulated gloves rated for the voltage of the equipment to be worked on. • Open the cabinet doors and stand off to the right hand side of the breaker to be energized. • Using the palm of your right hand, place it on the bottom of the break handle. • Place your left hand behind your back and with your face turned away, push the breaker handle upward. • Doff arc flash protection kit and electrical insulated gloves.	• JSA: Single-Source Lockout-Tagout (LOTO)

JOB SAFETY ANALYSIS

Project:	Roxana Public Works Yard	*Page: 1 of 3*
Job:	Extraction Well Determination of Flow Rate	
Risk:	Moderate Risk Task	

Revision No. JSA-Mc2-EWFR-2016-11	JSA Type: Well field operations
Revision Date: November 16, 2016	Task Type: Determination of extraction well flow rate
Approved Date:	Affected Position: SEE operator

PPE	**Personal Protective Equipment**	
Type	**Personal Protective Equipment**	**Description**
Head Protection	Hard hat	Type I, Class E, compat ble with face shield, ANSI Z89.1-2003 / CSA Z94.1-15
	Face Shield	For splash protection when there is a risk of exposure to hot fluids
Foot Protection	Steel-toed rubber boots	Electrical hazard (EH) rated, Grade 1, ANSI Z41.1-1999 / CSA Z195-14
Dermal Protection	Long sleeve shirt/pants	For protection against thermal exposure
	Full rain jacket coveralls	For splash protection when there is a risk of exposure to hot fluids
Eye Protection	Safety glasses or safety goggles	With side shields, ANSI Z87.1-2010 / CSA Z94.3-07
Hand Protection	Electrical-insulating gloves	Class 0, with outer leather protectors, 29 CFR 1910.137
	Nitrile gloves	Required beneath outer gloves when there is risk of chemical exposure
Worker Visibility	High visibility safety vest	Class II or greater, ANSI 107-2015 / CSA Z96-15

Supplies		
Type	**Supply**	**Description**
Communication	Mobile phone	
Miscellaneous	Volt meter	Stray voltage eliminator should be used on digital meters
	Temperature gun	
	Photoionization detector (PID)	Cal bration to be performed prior to use
	Spare pump or slurper tube assembly	
	Plastic sheeting	
	5 gallon bucket	

Warnings		
Type	**Special Precautions**	**Action Requirement**
Lightning	Electrocution	No one is permitted in the well field during lightning and until 30 minutes after the last recorded strike.
Hot Surfaces	Third degree burns	Equipment only to be handled when temperatures are equal to or less than 50°C/122°F, or with appropriate PPE up to temperatures of 120°C/248°F.
Pressure	Impact injury	Equipment may be under pressure. Use only approved valves, fittings, regulators, etc. Ensure safety relief devices are functional prior to operation.
Contamination	Chemical exposure	Review site-specific health and safety plan and consult with onsite health and safety representative to determine air monitoring protocols, MSDS, PPE requirements, and engineering controls to mitigate risk of exposure.

Job Steps					
Job Step No.	**Job Step Description**		**Potential Hazard**	**Critical Action**	**Reference**
1	Pre-work preparation.	1	General	• Review general site operations and maintenance plan (O&M Plan). • Review site health and safety plan (HASP). • Review waste management procedures to control all waste being generated during decontamination procedures. • Review relevant McMillan-McGee JSAs:	• HASP • O&M Plan • Associated JSAs

JOB SAFETY ANALYSIS

McMillan-McGee Corp	**Project:**	Roxana Public Works Yard *Page: 2 of 3*
	Job:	Extraction Well Determination of Flow Rate
	Risk:	Moderate Risk Task

Job Steps

Job Step No.	Job Step Description		Potential Hazard	Critical Action	Reference
				i. Step and Touch Potential Testing;	
		2	Slips, trips, and falls	• Inspect and familiarize self with work area. • Remove or mark potential tripping/slipping hazards that may be present in the work area. • Use care when stepping over or around cables, wires, pipes, and hoses.	
		3	Inclement weather • Cold stress (winter) • Heat stress and sun burns (summer)	• For colder weather, wear extra layers of warm, loose clothes, hat and scarf to cover face, ear and neck, and have cold-prevention liners worn under typical nitrile, work, or insulating gloves. • For hotter weather, consume enough water to stay hydrated, plan work/rest shifts, and apply sunscreen to prevent sunburn.	
		4	Damaged tools	• Gather and inspect tools prior to work.	
		5	Damaged PPE	• Gather and inspect PPE prior to work.	
2	Determine liquid extraction rate from well.	1	Exposure to hot surfaces	• Extraction well components may be hot depending on subsurface temperatures. Review the latest data available from the sensor or a nearby location prior to initiating work. • Use a temperature gun to verify surface temperatures prior to touching. Thermal resistant gloves must be used if surface temperatures exceed 50°C/122°F. • Don PPE – thermal resistant gloves, long sleeve shirt/pants or coveralls.	
		2	Exposure to contaminants, fume or inhalation source, dermal source	• Air monitoring should be performed within the breathing zone and near the port being accessed. Check with the site health and safety plan for details on the site-specific contaminants and action levels. • Stand upwind of the extraction well on which the flow rate determination will be performed. • Review the latest groundwater analytical data available, and ensure that nitrile gloves and other chemical resistant PPE are worn during the liquid extraction flow rate determination procedure.	
		3	Pressure, hot liquid, and hot vapor hazard	• Lay down plastic sheeting near the extraction well location, and place 5-gallon bucket on top. • Don PPE – nitrile gloves, thermal resistant gloves, coveralls or long sleeve shirt and pants, and splash protection PPE if there is a risk of exposure to hot fluids. • Verify the pump operation by observing flow in the liquid line. • For extraction wells with pneumatic pumps: i. Close the air assist feed line valve and the liquid discharge valve from the pump at the main header; ii. Disconnect the liquid discharge line from the main header and place the end of the line into a 5 gallon bucket;	

JOB SAFETY ANALYSIS		
McMillan-McGee Corp	**Project:**	Roxana Public Works Yard *Page: 3 of 3*
	Job:	Extraction Well Determination of Flow Rate
	Risk:	Moderate Risk Task

Job Steps

Job Step No.	Job Step Description		Potential Hazard	Critical Action	Reference
				iii. With the end of the liquid line in the bucket, open the air feed line valve and discharge liquid into the bucket until the bucket is filled with 4 gallons of water; iv. Record the time it took to produce 4 gallons; and, v. Reconnect the liquid discharge line to the main header, open the air feed line and the liquid discharge valve at the main header. • For extraction wells with slurper tubes: i. Close the air assist feed line valve and the liquid discharge valve from the slurper tube at the main header; ii. Disconnect the liquid discharge line from the main header and install a knockout pot in line with the discharge line; iii. With the knockout pot installed, open the air feed line valve and discharge liquid through the knockout pot until it is filled with 4 gallons of water; iv. Record the time it took to produce 4 gallons; v. Remove the knockout pot, slurping its contents into the main header pipe; and, • Reconnect the liquid discharge line to the main header, open the air feed line and the liquid discharge valve at the main header.	

JOB SAFETY ANALYSIS

Project:	Roxana Public Works Yard	*Page: 1 of 3*
Job:	Extraction Well Vapor Flow Readings	
Risk:	Moderate Risk Task	

Revision No. JSA-Mc2-EWVF-2016-12	JSA Type: Well field operations
Revision Date: December 11, 2016	Task Type: Vapor flow rate determination
Approved Date:	Affected Position: SEE operator

PPE	**Personal Protective Equipment**	
Type	**Personal Protective Equipment**	**Description**
Head Protection	Hard hat	Type I, Class E, compat ble with face shield, ANSI Z89.1-2003 / CSA Z94.1-15
	Face shield	For splash protection when there is a risk of exposure to hot fluids
Foot Protection	Steel-toed boots	Electrical hazard (EH) rated, Grade 1, ANSI Z41.1-1999 / CSA Z195-14
Dermal Protection	Long sleeve shirt/pants	For protection against thermal exposure; coveralls can also be used
Eye Protection	Safety glasses or safety goggles	With side shields, ANSI Z87.1-2010 / CSA Z94.3-07
Hand Protection	Electrical-insulating gloves	Class 0, with outer leather protectors, 29 CFR 1910.137
	Thermal resistant gloves	Heavy-duty leather or rubber insulating
	Nitrile gloves	Required beneath outer gloves when there is risk of chemical exposure
Worker Visibility	High visibility safety vest	Class II or greater, ANSI 107-2015 / CSA Z96-15

Supplies		
Type	**Supply**	**Description**
Communication	Mobile phone	
Miscellaneous	Volt meter	Stray voltage eliminator should be used on digital meters
	Temperature gun	
	Capsuhelic gage and flow sensor kit	Dwyer DS-300 pitot tube with capsuhelic gauge kit and associated fittings
	Photoionization detector (PID)	Cal bration to be performed prior to use

Warnings		
Type	**Special Precautions**	**Action Requirement**
Lightning	Electrocution	No one is permitted in the well field during lightning and until 30 minutes after the last recorded strike.
Hot Surfaces	Third degree burns	Equipment only to be handled when temperatures are equal to or less than 50°C/122°F, or with appropriate PPE up to temperatures of 120°C/248°F.
Pressure	Impact injury	Equipment may be under pressure. Use only approved valves, fittings, regulators, etc. Ensure safety relief devices are functional prior to operation.
Contamination	Chemical exposure	Review site-specific health and safety plan and consult with onsite health and safety representative to determine air monitoring protocols, MSDS, PPE requirements, and engineering controls to mitigate risk of exposure.

Job Steps					
Job Step No.	**Job Step Description**		**Potential Hazard**	**Critical Action**	**Reference**
1	Pre-work preparation.	1	General	• Review general site operations and maintenance plan (O&M Plan). • Review site health and safety plan (HASP). • Review waste management procedures to control all waste being generated during decontamination procedures. • Review relevant McMillan-McGee JSAs:	• HASP • O&M Plan • Associated JSAs
		2	Slips, trips, and falls	• Inspect and familiarize self with work area.	

JOB SAFETY ANALYSIS

McMillan-McGee Corp	**Project:**	Roxana Public Works Yard *Page: 2 of 3*
	Job:	Extraction Well Vapor Flow Readings
	Risk:	Moderate Risk Task

Job Steps

Job Step No.	Job Step Description		Potential Hazard	Critical Action	Reference
				• Remove or mark potential tripping/slipping hazards that may be present in the work area. • Use care when stepping over or around cables, wires, pipes, and hoses.	
		3	Inclement weather • Cold stress (winter) • Heat stress and sun burns (summer)	• For colder weather, wear extra layers of warm, loose clothes, hat and scarf to cover face, ear and neck, and have cold-prevention liners worn under typical nitrile, work, or insulating gloves. • For hotter weather, consume enough water to stay hydrated, plan work/rest shifts, and apply sunscreen to prevent sunburn.	
		4	Damaged tools	• Gather and inspect tools prior to work.	
		5	Damaged PPE	• Gather and inspect PPE prior to work.	
2	Isolate and disconnect the extraction well head from the main header pipe.	1	Exposure to hot surfaces	• Extraction well components may be hot depending on subsurface temperatures. Review the latest data available from the sensor or a nearby location prior to initiating work. • Use a temperature gun to verify surface temperatures prior to touching. Thermal resistant gloves must be used if surface temperatures exceed 50°C/122°F. • Don PPE – thermal resistant gloves, long sleeve shirt/pants or coveralls.	•
		2	Exposure to contaminants, fume or inhalation source	• Air monitoring should be performed within the breathing zone and near the port being accessed. Check with the site health and safety plan for details on the site-specific contaminants and action levels. • Stand upwind of the extraction well on which the flow rate determination will be performed.	
		3	Exposure to hot surfaces, liquids, and vapors	• Don PPE – nitrile gloves, thermal resistant gloves, coveralls or long sleeve shirt and pants, and splash protection PPE if there is a risk of exposure to hot fluids. • Close the ball valve at the extraction well head until it is approximately 1/3 closed. Disconnect the vacuum hose and tilt the hose up so that any liquid in the line drains into the extraction piping. Close the valve at the extraction piping once there is no longer any liquid in the line. • Install the flow sensor tube onto the cam lock fitting on the extraction well head and connect the vacuum hose to it. Install the pitot tube into the flow sensor tube and pull up on the pitot tube slightly so that it is not touching the bottom of the pipe.	
3	Perform vapor flow rate measurement.	1	Repetitive motion and ergonomic issues.	• Use assisting tools to turn difficult to reach valves. Support vapor flow measurement assembly while taking readings. • Connect the low-pressure and high-pressure hoses to the pitot tube and the appropriate connector on the capsuhelic gauge. • Close the low-pressure and high-pressure valves (left and right) on the capsuhelic gauge	

JOB SAFETY ANALYSIS		
McMillan-McGee Corp	**Project:**	Roxana Public Works Yard *Page: 3 of 3*
	Job:	Extraction Well Vapor Flow Readings
	Risk:	Moderate Risk Task

Job Steps

Job Step No.	Job Step Description		Potential Hazard	Critical Action	Reference
				and open the bleeder valve (middle) to atmosphere. • Use a precision screw driver to zero the gauge. • Open the low-pressure and high-pressure valves on the capsuhelic gauge and on the pitot tube. • Open the ball valve at the extraction piping and start adjusting the ball valve at the extraction well head until the desired reading is achieved.	
4	Reconnect the extraction well head to the extraction piping.	1	Exposure to hot surfaces, liquids, and vapors	• Close the ball valve at the extraction piping and allow the vacuum to decrease at the well by opening the sample port on the extraction well head. • Remove the flow meter assembly and reconnect the vacuum hose to the extraction well head and open the valve at the extraction pipe. • Ensure that the sample port is closed.	

JOB SAFETY ANALYSIS

Project:	Roxana Public Works Yard	*Page: 1 of 3*
Job:	Media Change Out	
Risk:	Significant Risk Task	

Revision No. JSA-MC2-MCO-2016-07	JSA Type: Treatment equipment maintenance
Revision Date: July 14, 2016	Task Type: Media change out
Approved Date:	Affected Position: Treatment system operator, waste management contractor

PPE	**Personal Protective Equipment**	
Type	**Personal Protective Equipment**	**Description**
Respiratory Protection	Respirator Dust Mask	Full face respirator w/ organic vapor carbon canisters, complete seal around face Disposable type dust mask
Eye Protection	Safety glasses Full face respirator	Primary PPE to be exchanged for full face respirator Full face respirator covering eyes and sealing to face required
Dermal Protection	Coveralls	Long sleeve long pant hooded
Foot Protection	Steel-toe boots	Steel toe boot with electrically isolated soles (EH rated)
Head Protection	Hard hat	ANSI type 1 class E
Hand Protection	Work gloves Chemical resistant gloves	Primary PPE to be exchanged with chemical resistant gloves Gauntlet cuff
Air Space Monitor	PID	Photo ionization detector
Ear Protection	Ear plugs or muffs	NRR 33 dB or greater
Worker Visibility	Reflective vest	ANSI class 1 minimum
Fall Protection	Harness	Fall Protection harness with lanyard

Supplies		
Type	**Supply**	**Description**
Engineering Control	Fan	120VAC Box Fan or equivalent capable of circulating 2500 cfm
	Building panel	Removable building wall panels
	Waste disposal drum	Properly identified/labeled waste disposal drum (for used Tyvek suits, rubber gloves, paper towels, dry waste, etc.)
	Traffic Barricades	Safety cones, caution tape, etc.
Tools	Step & touch potential tools	Review step & touch potential job safety analysis
	Adjustable wrench	Adjustable span wrench or “Crescent” wrench
	Adjustable pliers	Adjustable grip pliers or “Channel Lock” pliers
	Adjustable ladder	A-Frame folding
	Ratchet	3/8” or ½” drive ratcheting wrench
	Sockets	3/8” or ½” socket set (typical ½”-9/16” hardware)
	Screwdriver	Flathead
	Drill driver	Cordless drill driver w/ 5/16” socket bit (hose clamp removal and tightening)
	Impact Driver	½” Drive cordless impact driver
Material	Filter Media	Refer to media specific MSDS
	Pallets	Wooden pallets for setting bagged media on for transport
	Super Sacs	1000-1100 lb capacity super sacs for collection of media
Equipment	Vacuum Truck	
	Fork Lift	
	Double Containment	HDPE double containment for temporary storage of spent media
	Tarps & Tie-downs	Waterproof tarp for covering media, tie downs to fasten tarp
Communication	Mobile phone	

JOB SAFETY ANALYSIS

McMillan-McGee Corp	**Project:**	Roxana Public Works Yard *Page: 2 of 3*
	Job:	Media Change Out
	Risk:	Significant Risk Task

Job Steps

Job Step No.	Description		Potential Hazard	Critical Action	Reference
1	Pre-work Preparation	1	Contaminated Work Environment	• Cal brate PID • Survey Airspace w/ PID • Survey PPE & Stage	McMillan-McGee's thermal system O&M Plan and associated JSAs
		2	Heavy Equipment	• Lifting, hauling, hoisting & vacuuming spent media all have performance risks that if not managed properly can result in severe injury and death.	
		3	Energy: Electrical, Chemical, Mechanical, Pressure, Heat, etc.	• Situational and positional awareness and alertness	
2	Tools	1	Damaged/Missing	• Assemble and inspect, stage near work area	
3	Media Vessel Access	1	Slip/Trip/Fall	• Inspect and familiarize self with work area and remove or clearly mark potential tripping/slipping hazards or items that may be run into along the walking paths between equipment	
		2	Constrained Area	• Work locations near to and in-between media vessels can be constrained. Remove building wall panels if necessary to provide access.	
		3	Equipment/Component/ Traffic Obstructions	• A forklift and vacuum truck are required to remove and transport media. Situations exist where paths need to be cleared and established for entry and egress of equipment. • Identify equipment paths and cordon off the work area to prohibit the entry of unauthorized vehicle or persons.	
4	Spent Media Containment	1	Loss of Containment/Spilling	• Identify and setup a containment area for the temporary storage of media if necessary • The ideal location should be free from traffic, level, and not have any storm drains or manhole covers nearby.	
5	Don Task Specific PPE	1	Vapor Inhalation	• Air monitoring should be performed with the breathing zone and work space. Check with the site health and safety plan for details on the site specific contaminants and action levels • Protect respiratory system with full face respirator • Protect hands with chemical resistant gloves	
		2	Fall hazard/Trip Hazard	• Don fall protection lanyard before climbing on top of tanks or buildings • Secure fall protection lanyard to structural supports rated to at least 5000 lbs.	
6	Remove Spent Media	1	Contaminated Work Environment Vacuum Hazard Vacuum Truck Blower Motor Exhaust Fall Hazard Contaminated Air Space	• Process flow will need to be re-routed or ceased to remove media from the vessel. Notify all project personnel & MC2 project management before re-routing or ceasing process flow. • The extraction of spent media is typically conducted by a contractor other than MC2 or MK. Regardless, the operation of vacuum equipment introduces hazards for personnel. • Monitor air space with PID at all times	

JOB SAFETY ANALYSIS		
McMillan-McGee Corp	**Project:**	Roxana Public Works Yard *Page: 3 of 3*
	Job:	Media Change Out
	Risk:	Significant Risk Task

Job Steps

Job Step No.	Description		Potential Hazard	Critical Action	Reference
				• Isolate the vessels to be serviced & note valves closed and/or pumps & blowers that need to be turned off. • Lock out tag out pumps & blowers • Drain liquid from vessels if liquid present • Remove lids from vessels and hatches from building roofs • Setup ladder in a suitable level location near to the vessel to be serviced. • Monitor air space while media I vessel is being extracted. If air space exceeds site action levels a fan can be set up blowing away from the headspace of vacuum truck operator. • Monitor vacuum truck blower exhaust. If vacuum truck blower exhaust exceeds site action levels a temporary VGAC vessel may be placed on exhaust	
7	Refill Spent Media	1	Heavy Equipment	• Refilling vessels with media typically requires the use of a forklift. • A certified operator should only be allowed to operate the forklift • One signal person should be responsible for delivering commands to operator • Never walk under the boom or load • Fill vessels with new media • Secure lids on vessels	
8	Re-open process Valves	1	Vapor Flow Fluid Flow	• Open the noted valves closed to isolate vessels in step 7. • Notify personnel of intention to re-initiate process • Confirm process flow paths are not impinged • Remove lock out tag out • Re-start process equipment • Verify flow	

JOB SAFETY ANALYSIS

Project:	Roxana Public Works Yard	*Page: 1 of 4*
Job:	OWS Inspection & Cleaning	
Risk:	Significant Risk Task	

Revision No. JSA-MC2-OWSIC-2016-07	JSA Type: Treatment equipment maintenance
Revision Date: July 14, 2016	Task Type: Oil-water separator inspection and cleaning
Approved Date:	Affected Position: Treatment system operator

PPE	**Personal Protective Equipment**	
Type	**Personal Protective Equipment**	**Description**
Respiratory Protection	Respirator	Full face respirator w/ organic vapor carbon canisters, complete seal around face
Eye Protection	Safety glasses Full face respirator	Primary PPE to be exchanged for full face respirator Full face respirator covering eyes and sealing to face required
Dermal Protection	Tyvek suit	Long sleeve long pant hooded
Foot Protection	Steel-toe rubber boots	Chemical resistant full rubber boot with electrically isolated soles (EH rated)
Head Protection	Hard hat	ANSI type 1 class E
Hand Protection	Work gloves Chemical resistant gloves	Primary PPE to be exchanged with chemical resistant gloves Gauntlet cuff
Air Space Monitor	PID	Photo ionization detector
Ear Protection	Ear plugs or muffs	NRR 33 dB or greater
Worker Visibility	Reflective vest	ANSI class 1 minimum

Supplies		
Type	**Supply**	**Description**
Engineering Control	Fan	120VAC Box Fan or equivalent capable of circulating 2500 cfm
	Building panel	Removable building wall panels
	Waste disposal drum	Properly identified/labeled waste disposal drum (for used Tyvek suits, rubber gloves, paper towels, dry waste, etc.)
Tools	Step & touch potential tools	Review step & touch potential job safety analysis
	Adjustable wrench	Adjustable span wrench or "Crescent" wrench
	Adjustable pliers	Adjustable grip pliers or "Channel Lock" pliers
	Adjustable ladder	A-Frame folding
	Ratchet	3/8" or ½" drive ratcheting wrench
	Sockets	3/8" or ½" socket set (typical ½"-9/16" hardware)
	Screwdriver	Flathead
	Temperature Gun	Infrared temperature sensor
	Drill driver	Cordless drill driver w/ 5/16" socket bit (hose clamp removal and tightening)
	Measuring stick	Dedicated measuring stick for measuring sediment in OWS
Material	Anti-seize compound	Aluminum, copper, graphite lubricant
	Shop Towels	Disposable shop towels
Equipment	Extension cord	Grounded extension cord
	Double diaphragm pump	Air operated double diaphragm pump w/ regulator
	Double containment	Containment tote for double diaphragm pump
	Hose w/ camlock fittings	Suction and discharge lines double diaphragm pump
	Clean water source	Treated water source for the cleaning of OWS
	5 gallon bucket	Sample container (if desired) for the inspection of liquid from OWS
Communication	Mobile phone	

JOB SAFETY ANALYSIS

McMillan-McGee Corp	**Project:**	Roxana Public Works Yard *Page: 2 of 4*
	Job:	OWS Inspection & Cleaning
	Risk:	Significant Risk Task

Job Steps

Job Step No.	Job Step Description		Potential Hazard	Critical Action	Reference
1	Pre-work Preparation	1	Contaminated Airspace	• Cal brate PID • Survey Airspace w/ PID • Survey PPE & Stage	McMillan-McGee's thermal system O&M Plan and associated JSAs
		2	Contaminated Workspace	• Survey PPE & Stage	
		3	Energy: Electrical, Chemical, Mechanical, Pressure, Heat, etc.	• Situational and positional awareness and alertness	
2	Tools	1	Damaged/Missing	• Assemble and inspect, stage near work area: ladder, adjustable wrench, ratchet, socket set, screwdriver, flashlight, double diaphragm pump	
3	Building Access	1	Slip/Trip/Fall	• Inspect and familiarize self with work area and remove or clearly mark potential tripping/slipping hazards or items that may be run into along the walking paths between equipment	
4	Equipment Access & Building Ventilation	1	High concentration vapors	• Survey work area with properly calibrated PID • Position PID in work area	
		2	Constrained & Enclosed Workspace	• Remove building panels for equipment access • Use drill driver w/ 5/16" bit for hose clamps securing hasps on building corners.	
		3	Contaminated Workspace	• Remove building panels for building ventilation • Install fan blowing over tank and out building	
		4	Falling objects	• Position removed building panels in a location where they do not interfere with work • Place building panels where they will not be blown over by wind	
5	Equipment Setup	1	Loss of containment	• Place double diaphragm pump in double containment	
		2	Pressurized Air	• Securely attach air line from regulated source at air compressor to double diaphragm pump • Inspect hose clamps	
		3	Pressurized Liquid	• Securely attach suction and discharge lines of double diaphragm pump • Use locking pins to hold cam levers of cam lock fittings	
6	Transfer Pump Shutdown	1	Electrical/Mechanical/Fluid Transfer	• Reduce or cease liquid well field extraction if necessary. If well field liquid extraction is to be stopped notify MC2 to adjust injection rate • If more than 1 OWS exists and it is possible to bypass flow into second OWS see step 7A. • Turn off KO-90 transfer pump, air stripper transfer pump and knock out vessel/s transfer pump/s. • Wait 15 minutes and confirm fluid transfer through vessels is complete • Verify process pumps that can transfer liquid into OWS are all off and fully close influent flow control valves on OWS intake manifold.	Process & Instrumentation Diagram
6A	Bypass OWS	1	Electrical/Mechanical/Fluid Transfer	• Place OWS #2 online by opening the influent flow valves	

JOB SAFETY ANALYSIS

McMillan-McGee Corp	**Project:**	Roxana Public Works Yard *Page: 3 of 4*
	Job:	OWS Inspection & Cleaning
	Risk:	Significant Risk Task

Job Steps

Job Step No.	Job Step Description		Potential Hazard	Critical Action	Reference
				• Ensure OWS #2 transfer pump is on. • Close OWS #1 influent flow valves on OWS intake manifold.	
7	Pump out OWS	1	Contaminated Liquid	• Manually transfer remaining fluid in OWS directly to downstream treatment • Monitor OWS site glass and transfer pump pressure	
8	Don PPE	1	Vapor Inhalation	• Air monitoring should be performed with the breathing zone and work space. Check with the site health and safety plan for details on the site specific contaminants and action levels • Protect respiratory system with full face respirator	
		2	Contaminated Liquid Exposure	• Protect skin w/ Tyvek suit, rubber gloves, and rubber boots • Protect eyes, and face w/ full face respirator	
		3	Hot Liquid Exposure	• Monitor vessel temperature with temperature gun • Wait for vessel surface temperature to reach 85 degrees F before servicing vessel.	
9	Enter OWS Building	1	High concentrations of hydrocarbon vapors.	• Don all service specific PPE prior to performing service	
10	Vent & Remove OWS Lid	1	Contaminated Workspace, Contaminated Airspace, Hot Vapor, Hot Liquid, Contaminated Liquid, Hot Surface	• Verify all engineering controls in place & PPE on • Loosen portion of lid to allow tank to vent • Monitor air space for a period of 5 mins • Loosen and unfasten all hardware • Continue monitoring air space • Fan blowing over tank top	
11	Inspect Vessel	1	Contaminated Workspace, Contaminated Airspace, Hot Vapor, Hot Liquid, Contaminated Liquid, Hot Surface, Falls	• Place A-frame folding ladder in a location where you will be able to look into the tank while maximizing the distance from the top of the tank and face. • Measure sediment with dedicated measuring stick on influent side of OWS	
12	Fasten Lid	1	Contaminated Workspace, Contaminated Airspace, Hot Vapor, Hot Liquid, Contaminated Liquid, Hot Surface, Falls	• Secure lid on OWS	
13	Clean OWS	1	Contaminated Workspace, Contaminated Airspace, Hot Vapor, Hot Liquid, Contaminated Liquid, Hot Surface, Falls, Pressurized Liquid	• Verify lid on OWS secure and OWS vent unobstructed • Install fresh water source hose to LNAPL drain location • Slowly fill OWS with fresh water by monitoring site glass • When site glass has reached the operation level turn off fresh water source. • Install suction of double diaphragm pump on DNAPL drain fitting and suction side of pump • Install discharge of double diaphragm pump on KO-90 fitting and discharge side of pump • Open KO-90 valve	

JOB SAFETY ANALYSIS

McMillan-McGee Corp	**Project:**	Roxana Public Works Yard *Page: 4 of 4*
	Job:	OWS Inspection & Cleaning
	Risk:	Significant Risk Task

Job Steps

Job Step No.	Job Step Description		Potential Hazard	Critical Action	Reference
				• Turn double diaphragm pump on by supplying air to pump • Slowly open DNAPL drain fitting valve • OWS effluent will begin to be transferred from the OWS vessel to KO-90	

JOB SAFETY ANALYSIS

Project:	Roxana Public Works Yard	*Page: 1 of 4*
Job:	Pipe Decontamination, Cutting, and Disposal	
Risk:	Significant Risk Task	

Revision No. JSA-Mc2-PDD-2016-12	JSA Type: Demobilization
Revision Date: December 18, 2016	Task Type: Pipe decontamination, cutting, and disposal
Approved Date:	Affected Position: SEE operator, welding contractor

PPE	**Personal Protective Equipment**	
Type	**Personal Protective Equipment**	**Description**
Head Protection	Hard hat	Type I, Class E, compat ble with face shield, ANSI Z89.1-2003 / CSA Z94.1-15
	Face shield	For splash protection when there is a risk of exposure to hot fluids
	Welding hood	For torch cutting
Foot Protection	Steel-toed boots	Electrical hazard (EH) rated, Grade 1, ANSI Z41.1-1999 / CSA Z195-14
Dermal Protection	Long sleeve shirt and pants	For protection against thermal exposure; coveralls can also be used
	Splash resistant coveralls	For splash protection when there is a risk of exposure to hot fluids
	Welding jacket	For torch cutting
	Welding apron	For torch cutting
Eye Protection	Safety glasses or safety goggles	With side shields, ANSI Z87.1-2010 / CSA Z94.3-07
Hand Protection	Electrical insulated gloves	Class 0, with outer leather protectors, 29 CFR 1910.137
	Thermal resistant gloves	Heavy-duty leather or rubber insulating
	Nitrile gloves	Required beneath outer gloves when there is risk of chemical exposure
	Welding gloves	For torch cutting
Worker Visibility	High visibility safety vest	Class II or greater, ANSI 107-2015 / CSA Z96-15

Supplies		
Type	**Supply**	**Description**
Communication	Mobile phone	
Tools	Electrically isolated tools	Wrenches, pliers, ratchets, sockets, screwdrivers, drills, impact drivers, etc.
Miscellaneous	Photoionization detector (PID)	Cal bration to be performed prior to use
	Fire extinguisher	20# Type ABC
	Steam pressure washer	
	Oxyacetylene cylinders and torch	With blowback preventer
	5 gallon bucket	

Warnings		
Type	**Special Precautions**	**Action Requirement**
Lightning	Electrocution	No one is permitted in the well field during lightning and until 30 minutes after the last recorded strike.
Hot Surfaces	Third degree burns	Equipment only to be handled when temperatures are equal to or less than 50°C/122°F, or with appropriate PPE up to temperatures of 120°C/248°F.
Pressure	Impact injury	Equipment may be under pressure. Use only approved valves, fittings, regulators, etc. Ensure safety relief devices are functional prior to operation.
Contamination	Chemical exposure	Review site-specific health and safety plan and consult with onsite health and safety representative to determine air monitoring protocols, MSDS, PPE requirements, and engineering controls to mitigate risk of exposure.
Chemical	Production of dioxins / furans	Some organic compounds can form dioxins / furans when exposed to high temperatures during pipe cutting. Review the most recent sampling data and assess the potential for the production of these compounds prior to starting work.
Torch Cutting	Various injuries	Oxyacetylene torch operator must be properly trained, qualified, and certified.

JOB SAFETY ANALYSIS

McMillan-McGee Corp	**Project:**	Roxana Public Works Yard *Page: 2 of 4*
	Job:	Pipe Decontamination, Cutting, and Disposal
	Risk:	Significant Risk Task

Job Steps

Job Step No.	Job Step Description		Potential Hazard	Critical Action	Reference
1	Pre-work preparation.	1	General	• Review general site operations and maintenance plan (O&M Plan). • Review site health and safety plan (HASP). • Review waste management procedures to control all waste being generated during decontamination procedures. • Review torch cutting contractor's JSAs. • Review relevant McMillan-McGee JSAs: i. Step and Touch Potential Testing; ii. Single-Source Lockout-Tagout (LOTO).	• HASP • O&M Plan • Associated JSAs
		2	Slips, trips, and falls	• Inspect and familiarize self with work area. • Remove or mark potential tripping/slipping hazards that may be present in the work area. • Use care when stepping over or around cables, wires, pipes, and hoses.	
		3	Inclement weather • Cold stress (winter) • Heat stress and sun burns (summer)	• For colder weather, wear extra layers of warm, loose clothes, hat and scarf to cover face, ear and neck, and have cold-prevention liners worn under typical nitrile, work, or insulating gloves. • For hotter weather, consume enough water to stay hydrated, plan work/rest shifts, and apply sunscreen to prevent sunburn.	
		4	Damaged tools	• Gather and inspect tools prior to work.	
		5	Damaged PPE	• Gather and inspect PPE prior to work.	
2	Connect pressure washer to water supply.	1	Electrical hazards	• Verify integrity of power cables prior to energizing equipment, and avoid placing electrical cables in standing water. • Do not overload electrical breakers with additional equipment.	• JSA: Single-Source Lockout-Tagout (LOTO)
		2	Pressurized Fluids	• Verify all fluid connections prior to pressurizing the decontamination equipment.	
3	Isolate the well field piping line that will be cut and decontaminated, using the various isolation valves present throughout the system. Relieve pressure in the piping using existing valves and sample ports.	1	Exposure to contaminants, fume or inhalation source	• Air monitoring should be performed within the breathing zone and near the valves or ports being vented. Check with the site health and safety plan for details on the site-specific contaminants and action levels. • Stand upwind of the extraction well on which the flow rate determination will be performed.	
		2	Pressure, hot liquid, and hot vapor hazard	• Don PPE – nitrile gloves, thermal and chemical resistant gloves, splash-resistant coveralls, and face shield (secured to hard hat). • Avoid standing in the line of fire of any valves or ports that are being vented.	
4	Open terminal end of recovery line at capped end or tee fitting location. Do not cut with torch.	1	Leak or release	• Be prepared to contain any liquid coming from opened recovery line inside a 5 gallon bucket, or other container as appropriate. • Any leaks that are detected must be contained and cleaned up. If the water is suspected to be contaminated, immediately contain the release, then stop work and contact McMillan-McGee for further instructions.	

		2	Exposure to contaminants, fume or inhalation source	• Perform air monitoring in breathing zone with PID. If site-specific action levels are triggered, implement appropriate engineering controls or upgrade PPE per the health and safety plan.	
5	Start vapor extraction at the treatment system, turn on the steam pressure washer, and begin cleaning interior of recovery line piping, working from open end back towards treatment system.	1	Exposure to contaminants	• Perform pipe decontamination for a sufficient length of time to ensure that the section of pipe is cleaned. • After the decontamination has been performed, momentarily turn off the treatment system and verify that no contamination is detected from and within pipe, using the PID. Insert PID probe into pipe and verify that the reading does not increase above ambient conditions (i.e., close to 0.0 ppm). If not, restart the treatment system and continue cleaning. • Stop cleaning once a section of pipe is deemed decontaminated. Note length of pipe section verified as decontaminated. • Ensure the pipe is clear of sludge, scale, or residue.	
		2	Pressure, hot liquid, and hot vapor hazard	• Use caution while operating the steam pressure washer. Temperatures exceeding 50°C/122°F can cause burns and thermal splash protection PPE must be donned. • Avoid line of fire of steam pressure washer, and ensure the vacuum applied by the treatment equipment is sufficient that no steam escapes from any valves or sample ports.	
6	Turn off treatment system. Move oxyacetylene torch equipment to position. Oxyacetylene torch operator sets gauges and turns on gas cylinders.	1	General	• Oxyacetylene torch operator must be properly trained, qualified, and certified. • Oxyacetylene torch operator dons welding hood, welding jacket, welding apron, and welding gloves, in addition to standard PPE. • Set up temporary stands on each side of cut to fully support both sides of pipe once cut. • Set any required screens (may not be needed if in a fenced area). • Tank cylinders must be secured in a dolly. • All hoses associated with the equipment should be inspected. • Tanks must not tip over or have material fall on them that can damage valve or valve stem – violent decompression may otherwise result.	• Torch cutting contractor's JSAs
		2	Fire and burn hazards	• Treatment system must be turned OFF to avoid drawing any sparks into it. • Stray sparks may cause a fire. Remove flammable material from area. Use sand or welding blankets to cover any flammable material that cannot be moved. • Assemble a fire watch. Fire watch personnel shall retreat to an accessible area located 25 feet from the planned pipe cut to monitor for stray sparks. Secure the welding area, removing nonessential personnel. Have an ABC fire extinguisher ready with the fire watch.	
		3	Pinch points	• Fire watch and operator should keep hoses untangled and avoid pinch points.	
		4	Exposure to contaminants	• Pipe section to be cut must be deemed to be free of contamination prior to pipe cutting. Be	

				wary of organic compounds that can form dioxins / furans when exposed to high temperatures during pipe cutting.	
9	Operator must use striker to light torch. Apply torch to pipe and make cut.	1	Fire and burn hazards	• Avoid sparks and burning. Keep personnel away from direction of cut and/or where sparks and slag may fly. • Fire watch must oversee torch operation and be ready to respond if necessary.	
		2	Impact Injury	• Secure pipe sections being cut to prevent them from dropping on operator or equipment.	
10	Close valves, bleed off regulators, and wrap hoses. Move to next location and repeat as required.	1	Trip hazards	• Watch for hose tangles and other trip hazards in and around the well field.	
		2	Burn hazards	• Be aware that cut pipe will be hot for some time. Use a thermal gun to evaluate the temperature of the cut pipe sections prior to subsequent handling. Pipes only to be handled when temperatures are equal to or less than 50°C/122°F, or with appropriate PPE up to temperatures of 120°C/248°F.	

JOB SAFETY ANALYSIS

Project:	Roxana Public Works Yard	*Page: 1 of 3*
Job:	Single-Source Lockout-Tagout (LOTO)	
Risk:	Moderate Risk Task	

Revision No. JSA-Mc2-LOTO-2016-12	JSA Type: Electrical maintenance
Revision Date: December 29, 2016	Task Type: Single source lockout-tagout (LOTO)
Approved Date:	Affected Position: SEE operator

PPE	**Personal Protective Equipment**	
Type	**Personal Protective Equipment**	**Description**
Head Protection	Hard hat	Type I, Class E, compat ble with face shield, ANSI Z89.1-2003 / CSA Z94.1-15
Foot Protection	Steel-toed boots	Electrical hazard (EH) rated, Grade 1, ANSI Z41.1-1999 / CSA Z195-14
Dermal Protection	Long sleeve shirt/pants	For protection against thermal exposure; coveralls can also be used
Eye Protection	Safety glasses or safety goggles	With side shields, ANSI Z87.1-2010 / CSA Z94.3-07
Hand Protection	Electrical-insulating gloves	Class 0, with outer leather protectors, 29 CFR 1910.137
Worker Visibility	High visibility safety vest	Class II or greater, ANSI 107-2015 / CSA Z96-15

Supplies		
Type	**Supply**	**Description**
Communication	Mobile phone	
Miscellaneous	Volt meter	Stray voltage eliminator should be used on digital meters
	Lockout-tagout kits	Keyed padlocks, hasps, tags, zip ties, and markers

Warnings		
Type	**Special Precautions**	**Action Requirement**
Lightning	Electrocution	No one is permitted in the well field during lightning and until 30 minutes after the last recorded strike.
Arc Flash	Burn and blast injuries	Energizing and de-energizing breakers is restricted to trained ET-DSP™ operators only. Consult with McMillan-McGee for NFPA 70E Category.
Energized Equipment	Electrocution	All personnel must be LOTO trained and place their personnel lock on LOTO box or Single Source Clasp.

Job Steps					
Job Step No.	**Job Step Description**		**Potential Hazard**	**Critical Action**	**Reference**
1	Pre-work preparation.	1	General	• Review general site operations and maintenance plan (O&M Plan). • Review site health and safety plan (HASP). • Review waste management procedures to control all waste being generated during decontamination procedures. • Review relevant McMillan-McGee JSAs: i. Step and Touch Potential Testing; ii. Energize/De-Energize Breakers; iii. PDS Shut-Down and Start-Up.	• HASP • O&M Plan • Associated JSAs
		2	Slips, trips, and falls	• Inspect and familiarize self with work area. • Remove or mark potential tripping/slipping hazards that may be present in the work area. • Use care when stepping over or around cables, wires, pipes, and hoses.	
		3	Inclement weather • Cold stress (winter)	• For colder weather, wear extra layers of warm, loose clothes, hat and scarf to cover face, ear and neck, and have cold-prevention liners	

JOB SAFETY ANALYSIS		
McMillan-McGee Corp	**Project:**	Roxana Public Works Yard *Page: 2 of 3*
	Job:	Single-Source Lockout-Tagout (LOTO)
	Risk:	Moderate Risk Task

Job Steps					
Job Step No.	**Job Step Description**		**Potential Hazard**	**Critical Action**	**Reference**
			• Heat stress and sun burns (summer)	worn under typical nitrile, work, or insulating gloves. • For hotter weather, consume enough water to stay hydrated, plan work/rest shifts, and apply sunscreen to prevent sunburn.	
		4	Damaged PPE	• Gather and inspect PPE prior to work.	
		5	Damaged electrical components	• Inspect electrical components for damage. Do not proceed if any electrical equipment appears to be damaged.	
2	Determine component to be placed under LOTO and remove all load.	1	General	• Single source LOTO will be performed: i. Whenever work will be performed on a component that is or may become energized; or, ii. As otherwise instructed by McMillan-McGee Corp. personnel. • General LOTO procedures require that: i. Each individual must place their own lock and tag on the LOTO location; ii. All tags must have that individual's name, company name, identification of source, and contact information; and, iii. No one is allowed to remove another individual's lock or tag.	
		2	Electrical or pressure hazard from energized or pressurized equipment	• Once the load has been removed, deactivate the breaker or valve feeding the component. • If more than one breaker or valve must be deactivated to remove the load from the component, the cabinet door containing these breakers or valves must be placed under LOTO (in order for single source LOTO to remain applicable).	• JSA: Energize/De-Energize Breakers.
3	Place the breaker or valve feeding the component under LOTO.	1	Electrical or pressure hazard from energized or pressurized equipment	• The LOTO device will consist of a lock, a tag, and if required, a clasp. • Install the clasp (if required) on the device (i.e., breaker, valve, or cabinet handle) that will be locked out. Then place the tag on the lock, and the lock on the clasp or device. All individuals working on device must install their own personal lock and tag. • As a final measure, if poss ble, verify that the device under LOTO has been de-energized. • LOTO must remain on until the work is completed and inspected. • Each individual performing the work will confirm that all tasks are completed prior to removing their personal tag and lock from the device.	

JOB SAFETY ANALYSIS

McMillan-McGee Corp	**Project:**	Roxana Public Works Yard *Page: 1 of 4*
	Job:	Slurper Tube or Pump Removal and Replacement
	Risk:	Moderate Risk Task

Revision No. JSA-Mc2-SPRR-2016-12	JSA Type: Well field maintenance
Revision Date: December 29, 2016	Task Type: Slurper tube or pump removal and replacement
Approved Date:	Affected Position: SEE operator

PPE	**Personal Protective Equipment**	
Type	**Personal Protective Equipment**	**Description**
Head Protection	Hard hat	Type I, Class E, compat ble with face shield, ANSI Z89.1-2003 / CSA Z94.1-15
	Face shield	For splash protection when there is a risk of exposure to hot fluids
	Splash hood	Chemical resistant; head and neck must be fully covered around face shield
Foot Protection	Steel-toe rubber boots	Electrical hazard (EH) rated, Grade 1, ANSI Z41.1-1999 / CSA Z195-14
Dermal Protection	Long sleeve shirt/pants	For protection against thermal exposure; coveralls can also be used
	Splash suit	Chemical resistant; all skin must be fully covered
Eye Protection	Safety goggles	With side shields, ANSI Z87.1-2010 / CSA Z94.3-07
Hand Protection	Electrical-insulating gloves	Class 0, with outer leather protectors, 29 CFR 1910.137
	Neoprene rubber gloves	Outer gloves, must be temperature and chemical resistant
	Nitrile gloves	Required beneath outer gloves when there is risk of chemical exposure
Worker Visibility	High visibility safety vest	Class II or greater, ANSI 107-2015 / CSA Z96-15

Supplies		
Type	**Supply**	**Description**
Communication	Mobile phone	
Miscellaneous	Volt meter	Stray voltage eliminator should be used on digital meters
	Electrically isolated tools	
	Temperature gun	
	Photoionization detector (PID)	Cal bration to be performed prior to use
	Spare slurper tube or pump assembly	PEX tubing, PTFE tubing, bubblers, fittings; or, pneumatic pump, tubing, and fittings
	Plastic sheet and sorbent pads	
	5 gallon bucket	

Warnings		
Type	**Special Precautions**	**Action Requirement**
Lightning	Electrocution	No one is permitted in the well field during lightning and until 30 minutes after the last recorded strike.
Hot Surfaces	Third degree burns	Equipment only to be handled when temperatures are equal to or less than 50°C/122°F, or with appropriate PPE up to temperatures of 120°C/248°F.
Pressure	Impact injury	Equipment may be under pressure. Use only approved valves, fittings, regulators, etc. Ensure safety relief devices are functional prior to operation.
Contamination	Chemical exposure	Review site-specific health and safety plan and consult with onsite health and safety representative to determine air monitoring protocols, MSDS, PPE requirements, and engineering controls to mitigate risk of exposure.
Steam Geyser	Third degree burns	If groundwater temperatures are close to boiling point, a reduction of hydrostatic pressure within the well during maintenance activities can cause the boiling point of groundwater to decrease. If this decrease in boiling point causes additional groundwater to boil off within the well, the hydrostatic pressure will decrease further, potentially running away into the generation of a steam geyser. Prior to performing this task, subsurface temperatures must be evaluated, and a shutdown period may be required. Appropriate thermal and splash protection PPE must be donned, and cold water should be kept on hand to quench the well if necessary.

JOB SAFETY ANALYSIS

Project:	Roxana Public Works Yard	*Page: 2 of 4*
Job:	Slurper Tube or Pump Removal and Replacement	
Risk:	Moderate Risk Task	

Job Steps

Job Step No.	Job Step Description		Potential Hazard	Critical Action	Reference
1	Pre-work preparation.	1	General	• Review general site operations and maintenance plan (O&M Plan). • Review site health and safety plan (HASP). • Review waste management procedures to control all waste being generated during decontamination procedures. • Review relevant McMillan-McGee JSAs: i. Single-Source Lockout-Tagout (LOTO); ii. Extraction Well Determination of Flow Rate.	• HASP • O&M Plan • Associated JSAs
		2	Slips, trips, and falls	• Inspect and familiarize self with work area. • Remove or mark potential tripping/slipping hazards that may be present in the work area. • Use care when stepping over or around cables, wires, pipes, and hoses.	
		3	Inclement weather • Cold stress (winter) • Heat stress and sun burns (summer)	• For colder weather, wear extra layers of warm, loose clothes, hat and scarf to cover face, ear and neck, and have cold-prevention liners worn under typical nitrile, work, or insulating gloves. • For hotter weather, consume enough water to stay hydrated, plan work/rest shifts, and apply sunscreen to prevent sunburn.	
		4	Damaged tools	• Gather and inspect tools prior to work.	
		5	Damaged PPE	• Gather and inspect PPE prior to work.	
2	Disconnect the slurper tube or pump while maintain vacuum on the well with the extraction system. Remove the old slurper tube or pump and install a new assembly.	1	Leak or release	• Lay down sorbent pads on the ground surface below the extraction well location. Any leaks that are detected must be immediately contained, cleaned up, and documented. • Lay down plastic sheeting upwind of the extraction well, to act as a laydown area for the slurper tube or pump assembly that will be removed from the well. Pin the corners of the plastic sheeting. Do not block off personnel egress/regress from the area when staging plastic sheeting.	
		2	Exposure to contaminants, fume or inhalation source, dermal source	• Air monitoring should be performed within the breathing zone where work is being performed. Check with the site health and safety plan for details on the site-specific contaminants and action levels. • Stand upwind of the extraction well on which the slurper tube or pump replacement will be performed. • Review the latest groundwater analytical data available, and ensure that nitrile gloves and other chemical resistant PPE are worn throughout the duration of this procedure.	
		3	Exposure to hot surfaces	• Well components may be hot depending on subsurface temperatures. Review the latest data available from the sensor or a nearby location prior to initiating work. • Use a temperature gun to verify surface temperatures prior to touching. Thermal resistant gloves must be used if surface temperatures exceed 50°C/122°F.	• Temperature data

		4	Pressure, hot liquid, and hot vapor hazard	• Don PPE – coveralls or long sleeve shirt and pants, safety goggles, face shield affixed to hard hat, splash protection hood and suit, steel-toed rubber boots, nitrile gloves, and thermal resistant neoprene rubber gloves. • Isolate and disconnect the slurper tube or pump from the extraction system: i. At the main header, close the ball valves on the air assist feed line and the liquid extraction line to the well, and place the valves under LOTO; and, ii. Disconnect the air and extraction line, drain any fluid into a bucket, and temporarily plug off the line. • Remove the slurper tube or pump: i. Partially close the vapor extraction line to the well head at the main header (3/4 turn) so that the well head is under a slight vacuum; ii. Standing upwind, open the well head vent valve, allowing atmospheric air to be pulled into the well and preventing VOCs from escaping; iii. If needed, remove the temperature gauge from the side of the well head and store temporarily; iv. Loosen the strain reliefs on the well head top plate, remove the bolts on the top plate, and slowly lift the top plate and place in a bucket – if this is a pump replacement, keep the rope attached; v. Secure the well head gasket to the well with cable ties; and, vi. For a slurper tube replacement, close the well head vent valve, and pull the PEX tube and PTFE air assist line through the top plate of the well head, placing them onto the plastic sheeting or into a waste bucket as they are being removed; or vii. For a pump replacement, close the well head vent valve, and with one person lifting the pump out of the well (pulling with weight on the rope) and another pulling the air and extraction lines out of the well, coil the tubing and place the old assembly on the plastic sheeting, then disconnect all lines from the old pump. • Install the replacement slurper tube or pump: i. For a slurper tube replacement, connect a new bubbler to a PTFE tube fed through the PEX tubing, and then feed the slurper tube assembly through the top plate of the well head to the desired depth; or, ii. For a pump replacement, connect all lines to the spare pump, hang the pump in the well and lower it using the rope to the desired depth, and then pass the air line and liquid line through the top of the cap, ensuring all locking links under the cap are secured; iii. Secure the well head top plate by opening the well head vent valve, removing the cable ties securing the well head gasket in place, replacing the well	• JSA: Single-Source Lockout-Tagout (LOTO) • JSA: Extraction Well Determination of Flow Rate

				head top plate into position, and then bolting it down; iv. Tighten all strain reliefs to secure the tubing, re-install the temperature gauge (if applicable), and re-connect the liquid and air assist lines to the main header; v. Open the liquid extraction line and then slowly open the air assist supply; and, vi. Monitor the pump cycle or air assist time and measure the rate of liquid extraction if necessary; vii. Partially close the vapor extraction line to the well head at the main header (3/4 turn) so that the well head is under a slight vacuum. • Dispose of any spent or waste materials in accordance with approved site procedures.	

JOB SAFETY ANALYSIS

Project:	Roxana Public Works Yard	*Page: 1 of 4*
Job:	Steam Operation	
Risk:	Significant Risk Task	

Revision No. JSA-Mc2-SO-2016-12	JSA Type: Steam operations
Revision Date: December 30, 2016	Task Type: Steam generator start-up, operations, and shut-down
Approved Date:	Affected Position: SEE operator

PPE	**Personal Protective Equipment**	
Type	**Personal Protective Equipment**	**Description / Requirements**
Head Protection	Hard hat	Type I, Class E, compat ble with face shield, ANSI Z89.1-2003 / CSA Z94.1-15
	Face Shield	For splash protection when there is a risk of exposure to hot fluids
Foot Protection	Steel-toed boots	Electrical hazard (EH) rated, Grade 1, ANSI Z41.1-1999 / CSA Z195-14
Dermal Protection	Long sleeve shirt/pants	For protection against thermal exposure; coveralls can also be used
	Heavy rain coat	Required when working on any steam fittings.
Eye Protection	Safety glasses or safety goggles	With side shields, ANSI Z87.1-2010 / CSA Z94.3-07
Hand Protection	Rubber thermally insulating gloves	Required when working on any steam fittings above 60F.
	Heavy-duty leather gloves	Required if parts are below 60F.
Worker Visibility	High visibility safety vest	Class II or greater, ANSI 107-2015 / CSA Z96-15

Supplies		
Type	**Supply**	**Description**
Communication	Mobile phone	
Miscellaneous	Volt meter	Stray voltage eliminator should be used on digital meters
	Temperature gun	

Warnings		
Type	**Special Precautions**	**Action Requirement**
Lightning	Electrocution	No one is permitted in the well field during lightning and until 30 minutes after the last recorded strike.
Hot Surfaces	Third degree burns	Equipment only to be handled when temperatures are equal to or less than 50°C/122°F, or with appropriate PPE up to temperatures of 120°C/248°F.
Pressure	Impact injury	Equipment may be under pressure. Use only approved valves, fittings, regulators, etc. Ensure safety relief devices are functional prior to operation.
Contamination	Chemical exposure	Review site-specific health and safety plan and consult with onsite health and safety representative to determine air monitoring protocols, MSDS, PPE requirements, and engineering controls to mitigate risk of exposure.

Job Steps					
Job Step No.	**Activity/Sequence of Job Tasks**		**Potential Hazard**	**Critical Action**	**Reference**
1	Pre-work preparation.	1	General	• Review general site operations and maintenance plan (O&M Plan). • Review site health and safety plan (HASP). • Review waste management procedures to control all waste being generated during decontamination procedures. • Review LB-240 manual. • Review relevant McMillan-McGee JSAs: i. Step and Touch Potential Testing; ii. Energize/De-Energize Breakers; iii. PDS Shut-Down and Start-Up.	• HASP • O&M Plan • LB-240 Manual • Associated JSAs

JOB SAFETY ANALYSIS

Project:	Roxana Public Works Yard	*Page: 2 of 4*
Job:	Steam Operation	
Risk:	Significant Risk Task	

Job Steps					
Job Step No.	**Activity/Sequence of Job Tasks**		**Potential Hazard**	**Critical Action**	**Reference**
		2	Slips, trips, and falls	• Inspect and familiarize self with work area. • Remove or mark potential tripping/slipping hazards that may be present in the work area. • Use care when stepping over or around cables, wires, pipes, and hoses.	
		3	Inclement weather • Cold stress (winter) • Heat stress and sun burns (summer)	• For colder weather, wear extra layers of warm, loose clothes, hat and scarf to cover face, ear and neck, and have cold-prevention liners worn under typical nitrile, work, or insulating gloves. • For hotter weather, consume enough water to stay hydrated, plan work/rest shifts, and apply sunscreen to prevent sunburn.	
		4	Damaged PPE	• Gather and inspect PPE prior to work.	
		5	Damaged electrical components	• Inspect electrical components for damage. Do not proceed if any electrical equipment appears to be damaged.	
2	Startup	1	Pressure, hot liquid, and hot vapor hazard	• Prior to turning on main water supply line to the LB-240, confirm all lines are connected and all valves that need to be closed are closed. • Slowly open the water valve feeding the LB-240 unit. i. Check for leaks. • All lines should be treated as pressurized if they are not blocked, bled off, and placed under LOTO.	• JSA: Single-Source Lockout-Tagout (LOTO) • JSA: Energize/De-Energize Breakers
		2	Electrical hazard from energized equipment	• Contact a McMillan-McGee representative to remove LOTO on the breaker/fuse disconnect to the LB-240 to be operated, and energize breaker/fuse disconnect. i. No one is permitted in the Electro-Steam generator building while either unit is being energized. • Power up LB-240: i. Pressure to the unit should be started at 10psi; ii. Main valve at the LB-240 should be opened slowly sending steam to the well field; and iii. A site wa k down must be performed to make sure there is no steam being vented.	• JSA: Single Source LOTO • Review and follow start up procedures in the O&M Plan.
		3	Exposure to hot surfaces; pressure, hot liquid, and hot vapor hazard	• Don appropriate PPE (long sleeve shirt, heavy-duty leather gloves, face shield, and raincoat) treating all pipes and hoses as hot and under pressure. i. There should be no exposed skin after donning PPE. ii. Use temperature gun to verify surface temperatures prior to operating equipment. iii. Surface temperatures above 50°C/122°F will burn exposed skin – avoid contact. • As the system is generating steam surfaces will become hot and pressure in the line will increase.	

Job Steps

Job Step No.	Activity/Sequence of Job Tasks		Potential Hazard	Critical Action	Reference
		5	Emergency Shutdown Device (ESD)	• The ESDs on the PDS units are independent of the ESDs for the electro-steam units. • After depressing the ESD on the electro-steam unit, steam will stop being generated, but the system and all piping will still be hot and under pressure.	
3	Operations / Maintenance	1	Pressurized energy	• LB-240 and associated well field piping tied to the LB-240 will be deemed under pressure when the unit is in operation and also during cool down conditions. • Valves at steam spears must be closed when working on piping or unit to prevent pressure from entering the system from the below-surface piping. i. Valves are deemed an energy source and must be placed under LOTO if piping or system components are being worked on. • Allow the unit to cool down prior to performing any cleaning or maintenance activities, making sure the steam has condensed out.	
		2	Electrical hazard from energized equipment	• Electro-steam units must be de-energized and placed under LOTO during: i. Cleaning or replacing heater elements; ii. Cleaning water level probes; iii. Replacing glass sight tube; iv. Repair/replacement of piping or fittings associated with one of the LB-240s.	
		3	Hot Surface/Steam Pressure	• When opening/closing/adjusting valves in the well field, Step & Touch potential tests must be performed prior to operating any valves. **Note when transitioning between performing Step and Touch potential to operating the valves in the well field, the Level and type of PPE to be donned changes.** • Don appropriate PPE (long sleeve shirt, heavy-duty leather gloves, face shield, and raincoat), treating all pipes and hoses as hot and under pressure. i. There should be no exposed skin after donning PPE. ii. Use temperature gun to verify surface temperatures prior to operating equipment. Surface temperatures above 50°C/122°F will burn exposed skin – avoid contact.	
		4	Steam Injection	• Injecting steam into spears: i. Record totalizer feeding the LB-240; ii. Slowly open the valve to one of the steam spears, allowing condensate in the line to be injected; iii. Record temperature and pressure at the spear; iv. Slowly increase steam pressure at the LB-240 in increments no greater than 10 psi;	• Review O&M Plan.

Job Steps					
Job Step No.	**Activity/Sequence of Job Tasks**		**Potential Hazard**	**Critical Action**	**Reference**
				v. Check well field piping to make sure steam is not being vented; vi. Allow the system to stabilize prior to repeating steps iv & v until the desired injection rate is achieved; and vii. Slowly open the valve to the remaining steam spears, adjusting the pressure control at the LB-240 to maintain the desired injection rate per steam spear.	
4	Shutdown	1	Pressurized energy	• System is still deemed under pressure at the time of shutdown and until the units is given enough time to cool allowing the steam to condense out. • Until the unit is vented through the drain valve and placed under LOTO, system and piping will be deemed energized.	
		2	Electrical hazard from energized equipment	• The unit should be placed in an electrically safe state if not being used. • Contact a McMillan-McGee representative to de-energize the breaker/fuse disconnect of the LB-240 not being used and place the breaker/fuse disconnect under LOTO.	
		3	Hot Surface/Steam pressure	• Even though the electro-steam unit is de-energized, all lines will be assumed to be thermally hot and under pressure until there is sufficient time to allow the equipment and piping to cool. • Use temperature gun to verify surface temperatures prior to operating valves to be placed under LOTO.	
		4	Emergency Shutdown Device (ESD)	• The ESD contact must be left active in order to shut down the second LB-240 if needed.	

JOB SAFETY ANALYSIS

Project:	Roxana Public Works Yard	*Page: 1 of 3*
Job:	Temperature and Pressure Sensor Replacement	
Risk:	Moderate Risk Task	

Revision No. JSA-Mc2-TPSR-2016-11	JSA Type: Well field maintenance
Revision Date: November 16, 2016	Task Type: Temperature and pressure sensor replacement
Approved Date:	Affected Position: SEE operator

PPE	**Personal Protective Equipment**	
Type	**Personal Protective Equipment**	**Description**
Head Protection	Hard hat	Type I, Class E, compat ble with face shield, ANSI Z89.1-2003 / CSA Z94.1-15
	Face shield	For splash protection when there is a risk of exposure to hot fluids
Foot Protection	Steel-toed boots	Electrical hazard (EH) rated, Grade 1, ANSI Z41.1-1999 / CSA Z195-14
Dermal Protection	Long sleeve shirt and pants	For protection against thermal exposure; coveralls can also be used
Eye Protection	Safety glasses or safety goggles	With side shields, ANSI Z87.1-2010 / CSA Z94.3-07
Hand Protection	Electrical insulated gloves	Class 0, with outer leather protectors, 29 CFR 1910.137
	Thermal resistant gloves	Heavy-duty leather or rubber insulating
	Nitrile gloves	Required beneath outer gloves when there is risk of chemical exposure
Worker Visibility	High visibility safety vest	Class II or greater, ANSI 107-2015 / CSA Z96-15

Supplies		
Type	**Supply**	**Description**
Communication	Mobile phone	
Tools	Electrically isolated tools	Wrenches, pliers, ratchets, sockets, screwdrivers, drills, impact drivers, etc.
Miscellaneous	Volt meter	Stray voltage eliminator should be used on digital meters
	Temperature gun	
	Spare temperature or pressure sensors	
	Photoionization detector (PID)	Cal bration to be performed prior to use
	Plastic sheeting	

Warnings		
Type	**Special Precautions**	**Action Requirement**
Lightning	Electrocution	No one is permitted in the well field during lightning and until 30 minutes after the last recorded strike.
Hot Fluids and Surfaces	Third degree burns	Equipment only to be handled when temperatures are equal to or less than 50°C/122°F, or with appropriate PPE up to temperatures of 120°C/248°F.
Contamination	Chemical exposure	Review site-specific health and safety plan and consult with onsite health and safety representative to determine air monitoring protocols, MSDS, PPE requirements, and engineering controls to mitigate risk of exposure.

Job Steps					
Job Step No.	**Job Step Description**		**Potential Hazard**	**Critical Action**	**Reference**
1	Pre-work preparation.	1	General	• Review general site operations and maintenance plan (O&M Plan). • Review site health and safety plan (HASP). • Review waste management procedures to control all waste being generated during decontamination procedures. • Review relevant McMillan-McGee JSAs: i. Step and Touch Potential Testing;	• HASP • O&M Plan • Associated JSAs

JOB SAFETY ANALYSIS

Project:	Roxana Public Works Yard	*Page: 2 of 3*
Job:	Temperature and Pressure Sensor Replacement	
Risk:	Moderate Risk Task	

Job Steps

Job Step No.	Job Step Description		Potential Hazard	Critical Action	Reference
		2	Slips, trips, and falls	• Inspect and familiarize self with work area. • Remove or mark potential tripping/slipping hazards that may be present in the work area. • Use care when stepping over or around cables, wires, pipes, and hoses.	
		3	Inclement weather • Cold stress (winter) • Heat stress and sun burns (summer)	• For colder weather, wear extra layers of warm, loose clothes, hat and scarf to cover face, ear and neck, and have cold-prevention liners worn under typical nitrile, work, or insulating gloves. • For hotter weather, consume enough water to stay hydrated, plan work/rest shifts, and apply sunscreen to prevent sunburn.	
		4	Damaged tools	• Gather and inspect tools prior to work.	
		5	Damaged PPE	• Gather and inspect PPE prior to work.	
2	Sensor replacement	1	Exposure to hot surfaces	• Downhole sensors and receptacles may be hot depending on the temperatures in the subsurface. Review the latest data available from the sensor or a nearby location prior to initiating work. • Don PPE –thermal resistant gloves. • Use a temperature gun to verify surface temperatures prior to touching. Thermal resistant gloves must be used if surface temperatures exceed 50°C/122°F.	
		2	Exposure to contaminants, fume or inhalation source	• Air monitoring should be performed within the breathing zone and near the port being accessed. Check with the site health and safety plan for details on the site-specific contaminants and action levels.	
		3	Pressure, hot liquid, and hot vapor hazard	• Lay down plastic sheeting near the sensor well to act as a laydown area for the sensor string that will be removed from the well. • Don PPE – nitrile gloves, thermal resistant gloves, coveralls or long sleeve shirt and pants, and splash protection PPE if there is a risk of exposure to hot fluids. • Standing up wind from the sensor, slowly open the bleeder valve on the wellhead to allow the well to vent. If there is a plug on the bleeder ball valve, remove it prior to opening the valve. • Contact a McMillan-McGee representative if well does not stop venting. • Loosen and disconnect the sensor strain relief. • Disconnect the sensor string from the temperature sensor junction box, don temperature rated rubber gloves, and remove sensor from the well. • Record the serial number of the new sensor. Lower new sensor into the well, secure and tighten the strain relief. • Reconnect the sensor string. • Close the bleeder valve and contact a McMillan-McGee Corp. representative to confirm sensor communication.	

JOB SAFETY ANALYSIS

Project:	Roxana Public Works Yard	*Page: 3 of 3*
Job:	Temperature and Pressure Sensor Replacement	
Risk:	Moderate Risk Task	

Job Steps

Job Step No.	Job Step Description		Potential Hazard	Critical Action	Reference
				3Clean and store the old sensor and dispose of plastic sheeting in accordance with approved site waste management procedures.	

JOB SAFETY ANALYSIS

Project:	Roxana Public Works Yard	*Page: 1 of 3*
Job:	Vessel Opening & NAPL Measurement	
Risk:	Significant Risk Task	

Revision No. JSA-MK-VONM-2016-07	JSA Type: Treatment equipment maintenance
Revision Date: July 14, 2016	Task Type: Vessel opening and NAPL measurement
Approved Date:	Affected Position: Treatment system operator

PPE	**Personal Protective Equipment**	
Type	**Personal Protective Equipment**	**Description**
Eye Protection	Safety glasses Face Shield	ANSI Z87.1-2010
Dermal Protection	Coveralls	Long sleeve long pant hooded
Foot Protection	Steel-toe boots	Steel toe boot with electrically isolated soles (EH rated)
Head Protection	Hard hat	ANSI type 1 class E
Hand Protection	Work gloves Chemical resistant gloves	Primary PPE to be exchanged with chemical resistant gloves Gauntlet cuff & Nitrile
Air Space Monitor	PID	Photo ionization detector
Ear Protection	Ear plugs or muffs	NRR 33 dB or greater
Worker Visibility	Reflective vest	ANSI class 1 minimum
Fall Protection	Harness	Fall Protection harness with lanyard

Supplies		
Type	**Supply**	**Description**
Engineering Control	Waste disposal drum	Properly identified/labeled waste disposal drum (for used Tyvek suits, rubber gloves, paper towels, dry waste, etc.)
Tools	Step & touch potential tools	Review step & touch potential job safety analysis
	Adjustable wrench	Adjustable span wrench or “Crescent” wrench
	Adjustable pliers	Adjustable grip pliers or “Channel Lock” pliers
	Adjustable ladder	A-Frame folding
	Ratchet	3/8” or ½” drive ratcheting wrench
	Sockets	3/8” or ½” socket set (typical ½”-9/16” hardware)
	Screwdriver	Flathead
	Temperature Gun	Infrared temperature sensor
	Drill driver	Cordless drill driver w/ 5/16” socket bit (hose clamp removal and tightening)
Material	Shop Towels	Disposable shop towels
Equipment	COLIWASA Sampler	Composite Liquid Waste Sampler
Communication	Mobile phone	

JOB SAFETY ANALYSIS

Project:	Roxana Public Works Yard	*Page: 2 of 3*
Job:	Vessel Opening & NAPL Measurement	
Risk:	Significant Risk Task	

Job Steps

Job Step No.	Job Step Description		Potential Hazard	Critical Action	Reference
1	Pre-work Preparation	1	Contaminated Airspace	• Cal brate PID • Survey Airspace w/ PID • Survey PPE & Stage	McMillan-McGee's thermal system O&M Plan and associated JSAs
		2	Contaminated Workspace	• Survey PPE & Stage	
		3	Energy: Electrical, Chemical, Mechanical, Pressure, Heat, etc.	• Situational and positional awareness and alertness	
2	Tools	1	Damaged/Missing	• Assemble and inspect, stage near work area • COLIWASA placed in safe location on top of KO-90 tank	
3	Tank Access	1	Slip/Trip/Fall	• Inspect and familiarize self with work area and remove or clearly mark potential tripping/slipping hazards or items that may be run into along the walking paths between equipment	
		2	High concentration vapors	• Survey work area with properly calibrated PID • Position PID in work area	
4	Reduce Vacuum	1	High tank vacuum	• Communicate with jobsite personnel & MC2 project manager the intention to temporarily reduce treatment system vacuum • Note process vacuum & current blower speed • Lower main process blower speed by adjusting speed setting at VFD. • Achieve process vacuum of less than 1 in Hg.	
5	Don Task Specific PPE	1	Vapor Inhalation	• Air monitoring should be performed with the breathing zone and work space. Check with the site health and safety plan for details on the site specific contaminants and action levels • Protect respiratory system with full face respirator • Protect hands with chemical resistant gloves	
		2	Fall hazard/Trip Hazard	• Don fall protection lanyard before climbing on top of tank • Secure fall protection lanyard to welded tank lifting lugs or ladder rungs capable of supporting at least 5000 lbs • Move slowly when on top of tank as structural ridges pose trip hazard on top of tank. • A trip on the top of the tank has a high probability of resulting in a fall off the tank	
6	Collect Sample	1	Contaminated Liquids	• Remove tank top sample port • Verify negative pressure gradient exists from atmosphere to inside tank • Collect sample, photograph, and discharge sample back into KO-90 tank • Set COLIWASA sampler inside KO-90 double containment, clean after increasing vacuum. • Close tank top sample port	

JOB SAFETY ANALYSIS

Project:	Roxana Public Works Yard	*Page: 3 of 3*
Job:	Vessel Opening & NAPL Measurement	
Risk:	Significant Risk Task	

Job Steps

Job Step No.	Job Step Description		Potential Hazard	Critical Action	Reference
7	Increase Vacuum	1	Low Tank Vacuum	• Increase main blower speed by adjusting speed setting at VFD. • Set blower speed to the noted blower speed in Step 5.	

Appendix C – Chemical Information and Safety Data Sheets

Contaminants known or suspected of being present onsite (detected in >50% of samples) in significant concentrations (AECOM, 2019):

1. Benzene
2. 1-Methylnaphthalene
3. 2-Methylnaphthalene
4. Phenanthrene
5. Ethylbenzene
6. Pyrene
7. 1,2,4-Trimethylbenzene
8. Fluoranthene
9. m,p-Xylene
10. Phenol

Potential chemicals used during remediation system construction or operation:

1. Acetone
2. Activated Carbon
3. Alconox®
4. Analytix AN-450FG
5. Analytix AP-95030
6. Analytix AP-9525
7. Anti-Seize Lubricant
8. AQUCAR™ GA 15
9. AQUCAR™ GA 45
10. Diesel Fuel
11. Dolph® ER-41
12. DOWSIL Contractor's Concrete Sealant
13. GE Silicone II Rubber Sealant
14. Gorilla Glue
15. HDX Chlorinating Granules
16. HDX Muriatic Acid
17. HDX Super Shock
18. HOLEPLUG® Bentonite
19. HS-200 Organoclay Media
20. HS-270 Organoclay Anthracite Media

21. HS-600 6% KMnO4-Impregnated Media
22. Ingersoll-Rand All-Season Select Lubricant
23. Isobutylene Calibration Gas
24. Isopropyl Alcohol Wipes
25. Knock’er Loose Penetrating Solvent
26. Loctite® Epoxy Resin
27. Loctite® PTFE Thread Sealant
28. Mattei® ROTOROIL 8000 F2
29. Noalox® Anti-Oxidant
30. Odorless Mineral Spirits
31. Portland Cement
32. Prestone RV Antifreeze
33. PVC Cement
34. PVC Primer
35. RYDLYME
36. SAK Concrete Glue
37. Silica (Crystalline Quartz)
38. STL Thread Lubricant
39. SuperTech Antifreeze

SAFETY DATA SHEET

Benzene

Section 1. Identification

GHS product identifier : Benzene

Chemical name : benzene

Other means of identification : benzene, purebenzol; cyclohexatriene; phenyl hydride; phene; coal naphtha; pyrobenzol

Product type : Liquid.

Product use : Synthetic/Analytical chemistry.

Synonym : benzene, purebenzol; cyclohexatriene; phenyl hydride; phene; coal naphtha; pyrobenzol

SDS # : 001062

Supplier's details : Airgas USA, LLC and its affiliates
259 North Radnor-Chester Road
Suite 100
Radnor, PA 19087-5283
1-610-687-5253

24-hour telephone : 1-866-734-3438

Section 2. Hazards identification

OSHA/HCS status : This material is considered hazardous by the OSHA Hazard Communication Standard (29 CFR 1910.1200).

Classification of the substance or mixture : FLAMMABLE LIQUIDS - Category 2
SKIN IRRITATION - Category 2
EYE IRRITATION - Category 2A
GERM CELL MUTAGENICITY - Category 1
CARCINOGENICITY - Category 1
SPECIFIC TARGET ORGAN TOXICITY (REPEATED EXPOSURE) - Category 1

GHS label elements

Hazard pictograms :



Signal word : Danger

Hazard statements : Highly flammable liquid and vapor.
Causes skin irritation.
Causes serious eye irritation.
May cause genetic defects.
May cause cancer.
Causes damage to organs through prolonged or repeated exposure.
May form explosive mixtures with air.

Precautionary statements

General : Read label before use. Keep out of reach of children. If medical advice is needed, have product container or label at hand.

Prevention : Obtain special instructions before use. Wear protective gloves. Wear protective clothing. Wear eye or face protection. Keep away from heat, hot surfaces, sparks, open flames and other ignition sources. No smoking. Use explosion-proof electrical, ventilating or lighting equipment. Use non-sparking tools. Take action to prevent static discharges. Keep container tightly closed. Do not breathe vapor. Do not eat, drink or smoke when using this product. Wash thoroughly after handling.

Section 2. Hazards identification

Response : IF exposed or concerned: Get medical advice or attention. Take off contaminated clothing and wash it before reuse. IF IN EYES: Rinse cautiously with water for several minutes. Remove contact lenses, if present and easy to do. Continue rinsing. If eye irritation persists: Get medical advice or attention.

Storage : Store locked up. Store in a well-ventilated place. Keep cool.

Disposal : Dispose of contents and container in accordance with all local, regional, national and international regulations.

Hazards not otherwise classified : None known.

Section 3. Composition/information on ingredients

Substance/mixture : Substance

Chemical name : benzene

Other means of identification : benzene, purebenzol; cyclohexatriene; phenyl hydride; phene; coal naphtha; pyrobenzol

Product code : 001062

CAS number/other identifiers

CAS number : 71-43-2

Ingredient name	%	CAS number
benzene	100	71-43-2

Any concentration shown as a range is to protect confidentiality or is due to batch variation.

There are no additional ingredients present which, within the current knowledge of the supplier and in the concentrations applicable, are classified as hazardous to health or the environment and hence require reporting in this section.

Occupational exposure limits, if available, are listed in Section 8.

Section 4. First aid measures

Description of necessary first aid measures

Eye contact : Immediately flush eyes with plenty of water, occasionally lifting the upper and lower eyelids. Check for and remove any contact lenses. Continue to rinse for at least 10 minutes. Get medical attention.

Inhalation : Remove victim to fresh air and keep at rest in a position comfortable for breathing. If not breathing, if breathing is irregular or if respiratory arrest occurs, provide artificial respiration or oxygen by trained personnel. It may be dangerous to the person providing aid to give mouth-to-mouth resuscitation. Get medical attention. If unconscious, place in recovery position and get medical attention immediately. Maintain an open airway. Loosen tight clothing such as a collar, tie, belt or waistband.

Skin contact : Flush contaminated skin with plenty of water. Remove contaminated clothing and shoes. Wash contaminated clothing thoroughly with water before removing it, or wear gloves. Continue to rinse for at least 10 minutes. Get medical attention. Wash clothing before reuse. Clean shoes thoroughly before reuse.

Ingestion : Wash out mouth with water. Remove dentures if any. Remove victim to fresh air and keep at rest in a position comfortable for breathing. If material has been swallowed and the exposed person is conscious, give small quantities of water to drink. Stop if the exposed person feels sick as vomiting may be dangerous. Do not induce vomiting unless directed to do so by medical personnel. If vomiting occurs, the head should be kept low so that vomit does not enter the lungs. Get medical attention. Never give anything by mouth to an unconscious person. If unconscious, place in recovery position and get medical attention immediately. Maintain an open airway. Loosen tight clothing such as a collar, tie, belt or waistband.

Most important symptoms/effects, acute and delayed

Potential acute health effects

Section 4. First aid measures

Eye contact : Causes serious eye irritation.

Inhalation : No known significant effects or critical hazards.

Skin contact : Causes skin irritation.

Frostbite : Try to warm up the frozen tissues and seek medical attention.

Ingestion : No known significant effects or critical hazards.

Over-exposure signs/symptoms

Eye contact : Adverse symptoms may include the following:, pain or irritation, watering, redness

Inhalation : No specific data.

Skin contact : Adverse symptoms may include the following:, irritation, redness

Ingestion : No specific data.

Indication of immediate medical attention and special treatment needed, if necessary

Notes to physician : Treat symptomatically. Contact poison treatment specialist immediately if large quantities have been ingested or inhaled.

Specific treatments : No specific treatment.

Protection of first-aiders : No action shall be taken involving any personal risk or without suitable training. If it is suspected that fumes are still present, the rescuer should wear an appropriate mask or self-contained breathing apparatus. It may be dangerous to the person providing aid to give mouth-to-mouth resuscitation. Wash contaminated clothing thoroughly with water before removing it, or wear gloves.

See toxicological information (Section 11)

Section 5. Fire-fighting measures

Extinguishing media

Suitable extinguishing media : Use dry chemical, CO_2, water spray (fog) or foam.

Unsuitable extinguishing media : Do not use water jet.

Specific hazards arising from the chemical : Highly flammable liquid and vapor. Runoff to sewer may create fire or explosion hazard. In a fire or if heated, a pressure increase will occur and the container may burst, with the risk of a subsequent explosion. The vapor/gas is heavier than air and will spread along the ground. Vapors may accumulate in low or confined areas or travel a considerable distance to a source of ignition and flash back.

Hazardous thermal decomposition products : Decomposition products may include the following materials:
carbon dioxide
carbon monoxide

Special protective actions for fire-fighters : Promptly isolate the scene by removing all persons from the vicinity of the incident if there is a fire. No action shall be taken involving any personal risk or without suitable training. Move containers from fire area if this can be done without risk. Use water spray to keep fire-exposed containers cool.

Special protective equipment for fire-fighters : Fire-fighters should wear appropriate protective equipment and self-contained breathing apparatus (SCBA) with a full face-piece operated in positive pressure mode.

Section 6. Accidental release measures

Personal precautions, protective equipment and emergency procedures

For non-emergency personnel : No action shall be taken involving any personal risk or without suitable training. Evacuate surrounding areas. Keep unnecessary and unprotected personnel from entering. Do not touch or walk through spilled material. Shut off all ignition sources. No flares, smoking or flames in hazard area. Avoid breathing vapor or mist. Provide adequate ventilation. Wear appropriate respirator when ventilation is inadequate. Put on appropriate personal protective equipment.

Section 6. Accidental release measures

For emergency responders : If specialized clothing is required to deal with the spillage, take note of any information in Section 8 on suitable and unsuitable materials. See also the information in "For non-emergency personnel".

Environmental precautions : Avoid dispersal of spilled material and runoff and contact with soil, waterways, drains and sewers. Inform the relevant authorities if the product has caused environmental pollution (sewers, waterways, soil or air).

Methods and materials for containment and cleaning up

Small spill : Stop leak if without risk. Move containers from spill area. Use spark-proof tools and explosion-proof equipment. Dilute with water and mop up if water-soluble. Alternatively, or if water-insoluble, absorb with an inert dry material and place in an appropriate waste disposal container. Dispose of via a licensed waste disposal contractor.

Large spill : Stop leak if without risk. Move containers from spill area. Use spark-proof tools and explosion-proof equipment. Approach release from upwind. Prevent entry into sewers, water courses, basements or confined areas. Wash spillages into an effluent treatment plant or proceed as follows. Contain and collect spillage with non-combustible, absorbent material e.g. sand, earth, vermiculite or diatomaceous earth and place in container for disposal according to local regulations (see Section 13). Dispose of via a licensed waste disposal contractor. Contaminated absorbent material may pose the same hazard as the spilled product. Note: see Section 1 for emergency contact information and Section 13 for waste disposal.

Section 7. Handling and storage

Precautions for safe handling

Protective measures : Put on appropriate personal protective equipment (see Section 8). Do not get in eyes or on skin or clothing. Use only with adequate ventilation. Wear appropriate respirator when ventilation is inadequate. Do not enter storage areas and confined spaces unless adequately ventilated. Use only non-sparking tools. Take precautionary measures against electrostatic discharges. Do not ingest. Empty containers retain product residue and can be hazardous. Keep in the original container or an approved alternative made from a compatible material, kept tightly closed when not in use. Do not reuse container. Store and use away from heat, sparks, open flame or any other ignition source. Use explosion-proof electrical (ventilating, lighting and material handling) equipment. Do not breathe vapor or mist. Avoid exposure - obtain special instructions before use. Do not handle until all safety precautions have been read and understood.

Advice on general occupational hygiene : Eating, drinking and smoking should be prohibited in areas where this material is handled, stored and processed. Workers should wash hands and face before eating, drinking and smoking. Remove contaminated clothing and protective equipment before entering eating areas. See also Section 8 for additional information on hygiene measures.

Conditions for safe storage, including any incompatibilities : Store in accordance with local regulations. Store in a segregated and approved area. Store in original container protected from direct sunlight in a dry, cool and well-ventilated area, away from incompatible materials (see Section 10) and food and drink. Eliminate all ignition sources. Store locked up. Separate from oxidizing materials. Keep container tightly closed and sealed until ready for use. Containers that have been opened must be carefully resealed and kept upright to prevent leakage. Do not store in unlabeled containers. Use appropriate containment to avoid environmental contamination. See Section 10 for incompatible materials before handling or use.

Section 8. Exposure controls/personal protection

Control parameters

Occupational exposure limits

Section 8. Exposure controls/personal protection

Ingredient name	Exposure limits
benzene	**ACGIH TLV (United States, 3/2019).** **Absorbed through skin.** STEL: 8 mg/m³ 15 minutes. STEL: 2.5 ppm 15 minutes. TWA: 1.6 mg/m³ 8 hours. TWA: 0.5 ppm 8 hours. **NIOSH REL (United States, 10/2016).** STEL: 1 ppm 15 minutes. TWA: 0.1 ppm 10 hours. **OSHA PEL (United States, 5/2018).** STEL: 5 ppm 15 minutes. TWA: 1 ppm 8 hours. **OSHA PEL 1989 (United States, 3/1989).** STEL: 5 ppm 15 minutes. TWA: 1 ppm 8 hours. **OSHA PEL Z2 (United States, 2/2013).** AMP: 50 ppm 10 minutes. CEIL: 25 ppm TWA: 10 ppm 8 hours.

Appropriate engineering controls : Use only with adequate ventilation. Use process enclosures, local exhaust ventilation or other engineering controls to keep worker exposure to airborne contaminants below any recommended or statutory limits. The engineering controls also need to keep gas, vapor or dust concentrations below any lower explosive limits. Use explosion-proof ventilation equipment.

Environmental exposure controls : Emissions from ventilation or work process equipment should be checked to ensure they comply with the requirements of environmental protection legislation. In some cases, fume scrubbers, filters or engineering modifications to the process equipment will be necessary to reduce emissions to acceptable levels.

Individual protection measures

Hygiene measures : Wash hands, forearms and face thoroughly after handling chemical products, before eating, smoking and using the lavatory and at the end of the working period. Appropriate techniques should be used to remove potentially contaminated clothing. Wash contaminated clothing before reusing. Ensure that eyewash stations and safety showers are close to the workstation location.

Eye/face protection : Safety eyewear complying with an approved standard should be used when a risk assessment indicates this is necessary to avoid exposure to liquid splashes, mists, gases or dusts. If contact is possible, the following protection should be worn, unless the assessment indicates a higher degree of protection: chemical splash goggles.

Skin protection

Hand protection : Chemical-resistant, impervious gloves complying with an approved standard should be worn at all times when handling chemical products if a risk assessment indicates this is necessary. Considering the parameters specified by the glove manufacturer, check during use that the gloves are still retaining their protective properties. It should be noted that the time to breakthrough for any glove material may be different for different glove manufacturers. In the case of mixtures, consisting of several substances, the protection time of the gloves cannot be accurately estimated.

Body protection : Personal protective equipment for the body should be selected based on the task being performed and the risks involved and should be approved by a specialist before handling this product. When there is a risk of ignition from static electricity, wear anti-static protective clothing. For the greatest protection from static discharges, clothing should include anti-static overalls, boots and gloves.

Other skin protection : Appropriate footwear and any additional skin protection measures should be selected based on the task being performed and the risks involved and should be approved by a specialist before handling this product.

Section 8. Exposure controls/personal protection

Respiratory protection : Based on the hazard and potential for exposure, select a respirator that meets the appropriate standard or certification. Respirators must be used according to a respiratory protection program to ensure proper fitting, training, and other important aspects of use.

Section 9. Physical and chemical properties

Appearance

Physical state : Liquid. [Watery liquid.]

Color : Colorless. Yellowish.

Odor : Characteristic.

Odor threshold : Not available.

pH : Not available.

Melting point : 5.49°C (41.9°F)

Boiling point : 80.09°C (176.2°F)

Critical temperature : 288.95°C (552.1°F)

Flash point : Closed cup: -11°C (12.2°F)

Evaporation rate : 3.5 (butyl acetate = 1)

Flammability (solid, gas) : Not available.

Lower and upper explosive (flammable) limits : Lower: 1.2%
Upper: 7.8%

Vapor pressure : 10 kPa (75.01 mm Hg) [room temperature]

Vapor density : 2.7 (Air = 1)

Specific Volume (ft ^{3}/lb) : 1.1403

Gas Density (lb/ft ^{3}) : 0.877 (20°C / 68 to °F)

Relative density : 0.88

Solubility : Not available.

Solubility in water : 1.88 g/l

Partition coefficient: n-octanol/water : 2.13

Auto-ignition temperature : 498°C (928.4°F)

Decomposition temperature : Not available.

Viscosity : Dynamic (room temperature): 0.6 mPa·s (0.6 cP)

Flow time (ISO 2431) : Not available.

Molecular weight : 78.12 g/mole

Aerosol product

Heat of combustion : -40611960 J/kg

Section 10. Stability and reactivity

Reactivity : No specific test data related to reactivity available for this product or its ingredients.

Chemical stability : The product is stable.

Possibility of hazardous reactions : Under normal conditions of storage and use, hazardous reactions will not occur.

Conditions to avoid : Avoid all possible sources of ignition (spark or flame). Do not pressurize, cut, weld, braze, solder, drill, grind or expose containers to heat or sources of ignition. Do not allow vapor to accumulate in low or confined areas.

Incompatible materials : Reactive or incompatible with the following materials:
oxidizing materials

Section 10. Stability and reactivity

Hazardous decomposition products : Under normal conditions of storage and use, hazardous decomposition products should not be produced.

Hazardous polymerization : Under normal conditions of storage and use, hazardous polymerization will not occur.

Section 11. Toxicological information

Information on toxicological effects

Acute toxicity

Product/ingredient name	Result	Species	Dose	Exposure
benzene	LC50 Inhalation Gas. LD50 Oral	Rat Rat	10000 ppm 930 mg/kg	7 hours -

Irritation/Corrosion

Product/ingredient name	Result	Species	Score	Exposure	Observation
benzene	Eyes - Moderate irritant Eyes - Severe irritant Skin - Mild irritant Skin - Mild irritant Skin - Moderate irritant	Rabbit Rabbit Rat Rabbit Rabbit	- - - - -	88 mg 24 hours 2 mg 8 hours 60 Ul 24 hours 15 mg 24 hours 20 mg	- - - - -

Sensitization

Not available.

Mutagenicity

Not available.

Carcinogenicity

Not available.

Classification

Product/ingredient name	OSHA	IARC	NTP
benzene	+	1	Known to be a human carcinogen.

Reproductive toxicity

Not available.

Teratogenicity

Not available.

Specific target organ toxicity (single exposure)

Not available.

Specific target organ toxicity (repeated exposure)

Name	Category	Route of exposure	Target organs
benzene	Category 1	-	-

Aspiration hazard

Not available.

Information on the likely routes of exposure : Not available.

Section 11. Toxicological information

Potential acute health effects

Eye contact : Causes serious eye irritation.

Inhalation : No known significant effects or critical hazards.

Skin contact : Causes skin irritation.

Ingestion : No known significant effects or critical hazards.

Symptoms related to the physical, chemical and toxicological characteristics

Eye contact : Adverse symptoms may include the following:, pain or irritation, watering, redness

Inhalation : No specific data.

Skin contact : Adverse symptoms may include the following:, irritation, redness

Ingestion : No specific data.

Delayed and immediate effects and also chronic effects from short and long term exposure

Short term exposure

Potential immediate effects : Not available.

Potential delayed effects : Not available.

Long term exposure

Potential immediate effects : Not available.

Potential delayed effects : Not available.

Potential chronic health effects

Not available.

General : Causes damage to organs through prolonged or repeated exposure.

Carcinogenicity : May cause cancer. Risk of cancer depends on duration and level of exposure.

Mutagenicity : May cause genetic defects.

Teratogenicity : No known significant effects or critical hazards.

Developmental effects : No known significant effects or critical hazards.

Fertility effects : No known significant effects or critical hazards.

Numerical measures of toxicity

Acute toxicity estimates

Not available.

Section 12. Ecological information

Toxicity

Product/ingredient name	Result	Species	Exposure
benzene	Acute EC50 29000 µg/l Fresh water	Algae - Pseudokirchneriella subcapitata	72 hours
	Acute EC50 1600000 µg/l Fresh water	Algae - Selenastrum sp.	96 hours
	Acute EC50 9.23 mg/l Fresh water	Daphnia - Daphnia magna - Neonate	48 hours
	Acute LC50 21 mg/l Marine water	Crustaceans - Artemia salina	48 hours
	Acute LC50 5.28 ul/L Fresh water	Fish - Oncorhynchus gorbuscha - Fry	96 hours
	Chronic EC10 >1360 mg/l Fresh water	Algae - Scenedesmus subspicatus	96 hours
	Chronic NOEC 98 mg/l Fresh water	Daphnia - Daphnia magna	21 days
	Chronic NOEC 1.5 to 5.4 ul/L Marine water	Fish - Morone saxatilis - Juvenile (Fledgling, Hatchling, Weanling)	4 weeks

Section 12. Ecological information

Persistence and degradability

Not available.

Bioaccumulative potential

Product/ingredient name	$LogP_{ow}$	BCF	Potential
benzene	2.13	11	low

Mobility in soil

Soil/water partition coefficient (K_{OC}) : Not available.

Other adverse effects : No known significant effects or critical hazards.

Section 13. Disposal considerations

Disposal methods : The generation of waste should be avoided or minimized wherever possible. Disposal of this product, solutions and any by-products should at all times comply with the requirements of environmental protection and waste disposal legislation and any regional local authority requirements. Dispose of surplus and non-recyclable products via a licensed waste disposal contractor. Waste should not be disposed of untreated to the sewer unless fully compliant with the requirements of all authorities with jurisdiction. Waste packaging should be recycled. Incineration or landfill should only be considered when recycling is not feasible. This material and its container must be disposed of in a safe way. Care should be taken when handling emptied containers that have not been cleaned or rinsed out. Empty containers or liners may retain some product residues. Vapor from product residues may create a highly flammable or explosive atmosphere inside the container. Do not cut, weld or grind used containers unless they have been cleaned thoroughly internally. Avoid dispersal of spilled material and runoff and contact with soil, waterways, drains and sewers.

United States - RCRA Toxic hazardous waste "U" List

Ingredient	CAS #	Status	Reference number
Benzene (I,T)	71-43-2	Listed	U019

Section 14. Transport information

	DOT	TDG	Mexico	IMDG	IATA
UN number	UN1114	UN1114	UN1114	UN1114	UN1114
UN proper shipping name	BENZENE	BENZENE	BENZENE	BENZENE	BENZENE
Transport hazard class(es)	3 	3 	3 	3 	3 
Packing group	II	II	II	II	II
Environmental hazards	No.	No.	No.	No.	No.

"Refer to CFR 49 (or authority having jurisdiction) to determine the information required for shipment of the product."

Section 14. Transport information

Additional information

DOT Classification : **Reportable quantity** 10 lbs / 4.54 kg [1.3675 gal / 5.1767 L]. Package sizes shipped in quantities less than the product reportable quantity are not subject to the RQ (reportable quantity) transportation requirements.
Limited quantity Yes.
Quantity limitation Passenger aircraft/rail: 5 L. Cargo aircraft: 60 L.

TDG Classification : Product classified as per the following sections of the Transportation of Dangerous Goods Regulations: 2.18-2.19 (Class 3).
Explosive Limit and Limited Quantity Index 1
Passenger Carrying Road or Rail Index 5

IATA : **Quantity limitation** Passenger and Cargo Aircraft: 5 L. Cargo Aircraft Only: 60 L. Limited Quantities - Passenger Aircraft: 1 L.

Special precautions for user : **Transport within user's premises:** always transport in closed containers that are upright and secure. Ensure that persons transporting the product know what to do in the event of an accident or spillage.

Transport in bulk according to IMO instruments : Not available.

Section 15. Regulatory information

U.S. Federal regulations : **TSCA 8(a) CDR Exempt/Partial exemption**: Not determined
Clean Water Act (CWA) 307: benzene
Clean Water Act (CWA) 311: benzene

Clean Air Act Section 112 (b) Hazardous Air Pollutants (HAPs) : Listed

Clean Air Act Section 602 Class I Substances : Not listed

Clean Air Act Section 602 Class II Substances : Not listed

DEA List I Chemicals (Precursor Chemicals) : Not listed

DEA List II Chemicals (Essential Chemicals) : Not listed

SARA 302/304

Composition/information on ingredients

No products were found.

SARA 304 RQ : Not applicable.

SARA 311/312

Classification : Refer to Section 2: Hazards Identification of this SDS for classification of substance.

SARA 313

	Product name	CAS number	%
Form R - Reporting requirements	benzene	71-43-2	100
Supplier notification	benzene	71-43-2	100

SARA 313 notifications must not be detached from the SDS and any copying and redistribution of the SDS shall include copying and redistribution of the notice attached to copies of the SDS subsequently redistributed.

State regulations

Massachusetts : This material is listed.

Section 15. Regulatory information

New York : This material is listed.

New Jersey : This material is listed.

Pennsylvania : This material is listed.

California Prop. 65

⚠ **WARNING**: This product can expose you to Benzene, which is known to the State of California to cause cancer and birth defects or other reproductive harm. For more information go to www.P65Warnings.ca.gov.

Ingredient name	No significant risk level	Maximum acceptable dosage level
Benzene	Yes.	Yes.

International regulations

Chemical Weapon Convention List Schedules I, II & III Chemicals

Not listed.

Montreal Protocol

Not listed.

Stockholm Convention on Persistent Organic Pollutants

Not listed.

Rotterdam Convention on Prior Informed Consent (PIC)

Not listed.

UNECE Aarhus Protocol on POPs and Heavy Metals

Not listed.

Inventory list

Australia : This material is listed or exempted.

Canada : This material is listed or exempted.

China : This material is listed or exempted.

Europe : This material is listed or exempted.

Japan : **Japan inventory (ENCS)**: This material is listed or exempted.
Japan inventory (ISHL): This material is listed or exempted.

New Zealand : This material is listed or exempted.

Philippines : This material is listed or exempted.

Republic of Korea : This material is listed or exempted.

Taiwan : This material is listed or exempted.

Thailand : Not determined.

Turkey : This material is listed or exempted.

United States : This material is active or exempted.

Viet Nam : This material is listed or exempted.

Section 16. Other information

Hazardous Material Information System (U.S.A.)

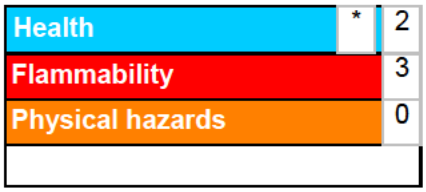

Section 16. Other information

Caution: HMIS® ratings are based on a 0-4 rating scale, with 0 representing minimal hazards or risks, and 4 representing significant hazards or risks. Although HMIS® ratings and the associated label are not required on SDSs or products leaving a facility under 29 CFR 1910.1200, the preparer may choose to provide them. HMIS® ratings are to be used with a fully implemented HMIS® program. HMIS® is a registered trademark and service mark of the American Coatings Association, Inc.

The customer is responsible for determining the PPE code for this material. For more information on HMIS® Personal Protective Equipment (PPE) codes, consult the HMIS® Implementation Manual.

National Fire Protection Association (U.S.A.)



Reprinted with permission from NFPA 704-2001, Identification of the Hazards of Materials for Emergency Response Copyright ©1997, National Fire Protection Association, Quincy, MA 02269. This reprinted material is not the complete and official position of the National Fire Protection Association, on the referenced subject which is represented only by the standard in its entirety.

Copyright ©2001, National Fire Protection Association, Quincy, MA 02269. This warning system is intended to be interpreted and applied only by properly trained individuals to identify fire, health and reactivity hazards of chemicals. The user is referred to certain limited number of chemicals with recommended classifications in NFPA 49 and NFPA 325, which would be used as a guideline only. Whether the chemicals are classified by NFPA or not, anyone using the 704 systems to classify chemicals does so at their own risk.

Procedure used to derive the classification

Classification	Justification
FLAMMABLE LIQUIDS - Category 2	Expert judgment
SKIN IRRITATION - Category 2	Expert judgment
EYE IRRITATION - Category 2A	Expert judgment
GERM CELL MUTAGENICITY - Category 1	Expert judgment
CARCINOGENICITY - Category 1	Expert judgment
SPECIFIC TARGET ORGAN TOXICITY (REPEATED EXPOSURE) - Category 1	Expert judgment

History

Date of printing : 6/1/2020

Date of issue/Date of revision : 6/1/2020

Date of previous issue : No previous validation

Version : 1

Key to abbreviations : ATE = Acute Toxicity Estimate
BCF = Bioconcentration Factor
GHS = Globally Harmonized System of Classification and Labelling of Chemicals
IATA = International Air Transport Association
IBC = Intermediate Bulk Container
IMDG = International Maritime Dangerous Goods
LogPow = logarithm of the octanol/water partition coefficient
MARPOL = International Convention for the Prevention of Pollution From Ships, 1973 as modified by the Protocol of 1978. ("Marpol" = marine pollution)
UN = United Nations

References : Not available.

Notice to reader

To the best of our knowledge, the information contained herein is accurate. However, neither the above-named supplier, nor any of its subsidiaries, assumes any liability whatsoever for the accuracy or completeness of the information contained herein.
Final determination of suitability of any material is the sole responsibility of the user. All materials may present unknown hazards and should be used with caution. Although certain hazards are described herein, we cannot guarantee that these are the only hazards that exist.

SAFETY DATA SHEET

Creation Date 24-Nov-2010 **Revision Date** 24-Dec-2021 **Revision Number** 7

1. Identification

Product Name **1-Methylnaphthalene**

Cat No. : **AC127160000; AC127160025; AC127160050; AC127161000; AC127165000**

CAS No 90-12-0
Synonyms Alpha-methylnaphthalene; 1-Methylnaphthalene

Recommended Use Laboratory chemicals.
Uses advised against Food, drug, pesticide or biocidal product use.

Details of the supplier of the safety data sheet

Company
Fisher Scientific Company
One Reagent Lane
Fair Lawn, NJ 07410
Tel: (201) 796-7100

Acros Organics
One Reagent Lane
Fair Lawn, NJ 07410

Emergency Telephone Number For information **US** call: 001-800-ACROS-01 / **Europe** call: +32 14 57 52 11
Emergency Number **US:**001-201-796-7100 / **Europe:** +32 14 57 52 99
CHEMTREC Tel. No.**US:**001-800-424-9300 / **Europe:**001-703-527-3887

2. Hazard(s) identification

Classification
This chemical is considered hazardous by the 2012 OSHA Hazard Communication Standard (29 CFR 1910.1200)

Flammable liquids	Category 4
Acute oral toxicity	Category 4

Label Elements

Signal Word
Warning

Hazard Statements
Combustible liquid
Harmful if swallowed



Precautionary Statements
Prevention
Wash face, hands and any exposed skin thoroughly after handling
Do not eat, drink or smoke when using this product
Keep away from heat/sparks/open flames/hot surfaces. - No smoking
Wear protective gloves/protective clothing/eye protection/face protection
Ingestion
IF SWALLOWED: Call a POISON CENTER or doctor/physician if you feel unwell
Rinse mouth
Fire
In case of fire: Use CO2, dry chemical, or foam for extinction
Storage
Store in a well-ventilated place. Keep cool
Disposal
Dispose of contents/container to an approved waste disposal plant
Hazards not otherwise classified (HNOC)
Toxic to aquatic life with long lasting effects

3. Composition/Information on Ingredients

Component	CAS No	Weight %
1-Methylnaphthalene	90-12-0	97

4. First-aid measures

General Advice If symptoms persist, call a physician.

Eye Contact Rinse immediately with plenty of water, also under the eyelids, for at least 15 minutes. Get medical attention.

Skin Contact Wash off immediately with plenty of water for at least 15 minutes. If skin irritation persists, call a physician.

Inhalation Remove to fresh air. If not breathing, give artificial respiration. Get medical attention if symptoms occur.

Ingestion Clean mouth with water and drink afterwards plenty of water.

Most important symptoms and effects None reasonably foreseeable. Symptoms of overexposure may be headache, dizziness, tiredness, nausea and vomiting

Notes to Physician Treat symptomatically

5. Fire-fighting measures

Suitable Extinguishing Media Water spray, carbon dioxide (CO2), dry chemical, alcohol-resistant foam. Water mist may be used to cool closed containers.

Unsuitable Extinguishing Media No information available

Flash Point 82 °C / 179.6 °F

Method - No information available

Autoignition Temperature 525 °C / 977 °F

Explosion Limits
Upper 6.50%
Lower .70%
Sensitivity to Mechanical Impact No information available
Sensitivity to Static Discharge No information available

Specific Hazards Arising from the Chemical
Combustible material. Flammable. Keep product and empty container away from heat and sources of ignition. Risk of ignition. Containers may explode when heated.

Hazardous Combustion Products
Carbon monoxide (CO). Carbon dioxide (CO_2).
Protective Equipment and Precautions for Firefighters
As in any fire, wear self-contained breathing apparatus pressure-demand, MSHA/NIOSH (approved or equivalent) and full protective gear.

NFPA

Health	Flammability	Instability	Physical hazards
2	2	0	N/A

6. Accidental release measures

Personal Precautions Use personal protective equipment as required. Ensure adequate ventilation. Remove all sources of ignition. Take precautionary measures against static discharges.

Environmental Precautions Do not flush into surface water or sanitary sewer system.

Methods for Containment and Clean Up Keep in suitable, closed containers for disposal. Soak up with inert absorbent material. Remove all sources of ignition.

7. Handling and storage

Handling Wear personal protective equipment/face protection. Ensure adequate ventilation. Do not get in eyes, on skin, or on clothing. Avoid ingestion and inhalation. Keep away from open flames, hot surfaces and sources of ignition.

Storage. Keep in a dry, cool and well-ventilated place. Keep container tightly closed. Keep away from heat, sparks and flame. Keep containers tightly closed in a cool, well-ventilated place. Keep away from heat. Keep in properly labeled containers. Keep containers tightly closed in a dry, cool and well-ventilated place. Incompatible Materials. Strong oxidizing agents.

8. Exposure controls / personal protection

Exposure Guidelines

Component	ACGIH TLV	OSHA PEL	NIOSH IDLH	Mexico OEL (TWA)
1-Methylnaphthalene	TWA: 0.5 ppm Skin			TWA: 0.5 ppm

Legend

ACGIH - American Conference of Governmental Industrial Hygienists

Engineering Measures Ensure adequate ventilation, especially in confined areas.

Personal Protective Equipment

Eye/face Protection Tight sealing safety goggles.

Skin and body protection Wear appropriate protective gloves and clothing to prevent skin exposure.

Respiratory Protection Wear a NIOSH/MSHA or European Standard EN 149 approved full-facepiece airline respirator in the positive pressure mode with emergency escape provisions.

Hygiene Measures Handle in accordance with good industrial hygiene and safety practice.

9. Physical and chemical properties

Physical State	Liquid
Appearance	Light yellow
Odor	Naphthalenic
Odor Threshold	No information available
pH	Not applicable
Melting Point/Range	-22 °C / -7.6 °F
Boiling Point/Range	240 - 243 °C / 464 - 469.4 °F
Flash Point	82 °C / 179.6 °F
Evaporation Rate	No information available
Flammability (solid,gas)	Not applicable
Flammability or explosive limits	
Upper	6.50%
Lower	.70%
Vapor Pressure	No information available
Vapor Density	No information available
Specific Gravity	1.020
Solubility	insoluble
Partition coefficient; n-octanol/water	No data available
Autoignition Temperature	525 °C / 977 °F
Decomposition Temperature	No information available
Viscosity	No information available
Molecular Formula	C11 H10
Molecular Weight	142.2

10. Stability and reactivity

Reactive Hazard None known, based on information available

Stability Stable under normal conditions.

Conditions to Avoid Incompatible products. Heating in air. Keep away from open flames, hot surfaces and sources of ignition.

Incompatible Materials Strong oxidizing agents

Hazardous Decomposition Products Carbon monoxide (CO), Carbon dioxide (CO_2)

Hazardous Polymerization No information available.

Hazardous Reactions None under normal processing.

11. Toxicological information

Acute Toxicity

Product Information

Component Information

Component	LD50 Oral	LD50 Dermal	LC50 Inhalation
1-Methylnaphthalene	LD50 = 1840 mg/kg (Rat)	Not listed	Not listed

Toxicologically Synergistic Products No information available

Delayed and immediate effects as well as chronic effects from short and long-term exposure

Irritation No information available

Sensitization No information available

Carcinogenicity The table below indicates whether each agency has listed any ingredient as a carcinogen.

Component	CAS No	IARC	NTP	ACGIH	OSHA	Mexico
1-Methylnaphthalene	90-12-0	Not listed	Not listed	Not listed	Not listed	Not listed

Mutagenic Effects No information available

Reproductive Effects No information available.

Developmental Effects No information available.

Teratogenicity No information available.

STOT - single exposure None known
STOT - repeated exposure None known

Aspiration hazard No information available

Symptoms / effects,both acute and delayed Symptoms of overexposure may be headache, dizziness, tiredness, nausea and vomiting

Endocrine Disruptor Information No information available

Other Adverse Effects The toxicological properties have not been fully investigated.

12. Ecological information

Ecotoxicity

Toxic to aquatic organisms, may cause long-term adverse effects in the aquatic environment. The product contains following substances which are hazardous for the environment.

Component	Freshwater Algae	Freshwater Fish	Microtox	Water Flea
1-Methylnaphthalene	Not listed	Pimephales promelas: LC50=9mg/L 48h	Not listed	LC50=1.2-1.4 mg/L 48h

Persistence and Degradability based on information available. May persist

Bioaccumulation/ Accumulation No information available.

Mobility Will likely be mobile in the environment due to its water solubility. Is not likely mobile in the environment due its low water solubility.

Component	log Pow
1-Methylnaphthalene	3.87

13. Disposal considerations

Waste Disposal Methods Chemical waste generators must determine whether a discarded chemical is classified as a hazardous waste. Chemical waste generators must also consult local, regional, and national hazardous waste regulations to ensure complete and accurate classification.

14. Transport information

DOT

UN-No UN3082

Proper Shipping Name Environmentally hazardous substances, liquid, n.o.s.
Technical Name 1-Methylnaphthalene
Hazard Class 9
Packing Group III

TDG

UN-No UN3082
Proper Shipping Name Environmentally hazardous substances, liquid, n.o.s.
Hazard Class 9
Packing Group III

IATA

UN-No UN3082
Proper Shipping Name Environmentally hazardous substances, liquid, n.o.s.
Hazard Class 9
Packing Group III

IMDG/IMO

UN-No UN3082
Proper Shipping Name Environmentally hazardous substances, liquid, n.o.s.
Hazard Class 9
Packing Group III

15. Regulatory information

United States of America Inventory

Component	CAS No	TSCA	TSCA Inventory notification - Active-Inactive	TSCA - EPA Regulatory Flags
1-Methylnaphthalene	90-12-0	X	ACTIVE	-

Legend:
TSCA US EPA (TSCA) - Toxic Substances Control Act, (40 CFR Part 710)
X - Listed
'-' - Not Listed

TSCA 12(b) - Notices of Export Not applicable

International Inventories

Canada (DSL/NDSL), Europe (EINECS/ELINCS/NLP), Philippines (PICCS), Japan (ENCS), Japan (ISHL), Australia (AICS), China (IECSC), Korea (KECL).

Component	CAS No	DSL	NDSL	EINECS	PICCS	ENCS	ISHL	AICS	IECSC	KECL
1-Methylnaphthalene	90-12-0	X	-	201-966-8	X	X	X	X	X	KE-24449

KECL - NIER number or KE number (http://ncis.nier.go.kr/en/main.do)

U.S. Federal Regulations

SARA 313 Not applicable

SARA 311/312 Hazard Categories See section 2 for more information

CWA (Clean Water Act) Not applicable

Clean Air Act Not applicable

OSHA - Occupational Safety and Health Administration Not applicable

CERCLA Not applicable

California Proposition 65 This product does not contain any Proposition 65 chemicals.

U.S. State Right-to-Know Regulations

Component	Massachusetts	New Jersey	Pennsylvania	Illinois	Rhode Island
1-Methylnaphthalene	X	X	X	-	-

U.S. Department of Transportation

Reportable Quantity (RQ): N
DOT Marine Pollutant N
DOT Severe Marine Pollutant N

U.S. Department of Homeland Security This product does not contain any DHS chemicals.

Other International Regulations

Mexico - Grade Moderate risk, Grade 2

Authorisation/Restrictions according to EU REACH

Safety, health and environmental regulations/legislation specific for the substance or mixture

Component	CAS No	OECD HPV	Persistent Organic Pollutant	Ozone Depletion Potential	Restriction of Hazardous Substances (RoHS)
1-Methylnaphthalene	90-12-0	Not applicable	Not applicable	Not applicable	Not applicable

Component	CAS No	Seveso III Directive (2012/18/EC) - Qualifying Quantities for Major Accident Notification	Seveso III Directive (2012/18/EC) - Qualifying Quantities for Safety Report Requirements	Rotterdam Convention (PIC)	Basel Convention (Hazardous Waste)
1-Methylnaphthalene	90-12-0	Not applicable	Not applicable	Not applicable	Not applicable

16. Other information

Prepared By Regulatory Affairs
Thermo Fisher Scientific
Email: EMSDS.RA@thermofisher.com

Creation Date 24-Nov-2010
Revision Date 24-Dec-2021
Print Date 24-Dec-2021
Revision Summary This document has been updated to comply with the US OSHA HazCom 2012 Standard replacing the current legislation under 29 CFR 1910.1200 to align with the Globally Harmonized System of Classification and Labeling of Chemicals (GHS).

Disclaimer

The information provided in this Safety Data Sheet is correct to the best of our knowledge, information and belief at the date of its publication. The information given is designed only as a guidance for safe handling, use, processing, storage, transportation, disposal and release and is not to be considered a warranty or quality specification. The information relates only to the specific material designated and may not be valid for such material used in combination with any other materials or in any process, unless specified in the text

End of SDS

SAFETY DATA SHEET

Revision Date 14-Feb-2020 **Revision Number** 2

1. Identification

Product Name **2-Methylnaphthalene**

Cat No. : **L02459**

CAS-No 91-57-6
Synonyms No information available

Recommended Use Laboratory chemicals.
Uses advised against Food, drug, pesticide or biocidal product use.

Details of the supplier of the safety data sheet

Company
Alfa Aesar
Thermo Fisher Scientific Chemicals, Inc.
30 Bond Street
Ward Hill, MA 01835-8099
Tel: 800-343-0660
Fax: 800-322-4757
Email: tech@alfa.com
www.alfa.com

Emergency Telephone Number
During normal business hours (Monday-Friday, 8am-7pm EST), call (800) 343-0660.
After normal business hours, call Carechem 24 at (866) 928-0789.

2. Hazard(s) identification

Classification
This chemical is considered hazardous by the 2012 OSHA Hazard Communication Standard (29 CFR 1910.1200)

Acute oral toxicity	Category 4
Skin Corrosion/Irritation	Category 2
Serious Eye Damage/Eye Irritation	Category 2
Specific target organ toxicity (single exposure)	Category 3
Target Organs - Respiratory system.	

Label Elements

Signal Word
Warning

Hazard Statements
Harmful if swallowed
Causes skin irritation
Causes serious eye irritation
May cause respiratory irritation



Precautionary Statements
Prevention
Wash face, hands and any exposed skin thoroughly after handling
Do not eat, drink or smoke when using this product
Wear protective gloves/protective clothing/eye protection/face protection
Avoid breathing dust/fume/gas/mist/vapors/spray
Use only outdoors or in a well-ventilated area
Inhalation
IF INHALED: Remove victim to fresh air and keep at rest in a position comfortable for breathing
Call a POISON CENTER or doctor/physician if you feel unwell
Skin
IF ON SKIN: Wash with plenty of soap and water
If skin irritation occurs: Get medical advice/attention
Take off contaminated clothing and wash before reuse
Eyes
IF IN EYES: Rinse cautiously with water for several minutes. Remove contact lenses, if present and easy to do. Continue rinsing
If eye irritation persists: Get medical advice/attention
Ingestion
IF SWALLOWED: Call a POISON CENTER or doctor/physician if you feel unwell
Rinse mouth
Storage
Store in a well-ventilated place. Keep container tightly closed
Store locked up
Disposal
Dispose of contents/container to an approved waste disposal plant
Hazards not otherwise classified (HNOC)
Toxic to aquatic life with long lasting effects

3. Composition/Information on Ingredients

Component	CAS-No	Weight %
2-Methylnaphthalene	91-57-6	99.0

4. First-aid measures

General Advice If symptoms persist, call a physician.

Eye Contact Rinse immediately with plenty of water, also under the eyelids, for at least 15 minutes. Get medical attention.

Skin Contact Wash off immediately with plenty of water for at least 15 minutes. If skin irritation persists, call a physician.

Inhalation Remove to fresh air. If not breathing, give artificial respiration. Get medical attention if symptoms occur.

Ingestion Clean mouth with water and drink afterwards plenty of water. Get medical attention if symptoms occur.

Most important symptoms and effects None reasonably foreseeable.
Notes to Physician Treat symptomatically

5. Fire-fighting measures

Unsuitable Extinguishing Media No information available

Flash Point No information available
Method - No information available

Autoignition Temperature No information available
Explosion Limits
Upper No data available
Lower No data available
Sensitivity to Mechanical Impact No information available
Sensitivity to Static Discharge No information available

Specific Hazards Arising from the Chemical
Keep product and empty container away from heat and sources of ignition.

Hazardous Combustion Products
None known.
Protective Equipment and Precautions for Firefighters
As in any fire, wear self-contained breathing apparatus pressure-demand, MSHA/NIOSH (approved or equivalent) and full protective gear.

NFPA

Health	Flammability	Instability	Physical hazards
2	1	0	N/A

6. Accidental release measures

Personal Precautions Ensure adequate ventilation. Use personal protective equipment as required. Avoid dust formation.
Environmental Precautions Do not flush into surface water or sanitary sewer system.

Methods for Containment and Clean Up Sweep up and shovel into suitable containers for disposal. Keep in suitable, closed containers for disposal.

7. Handling and storage

Handling Wear personal protective equipment/face protection. Ensure adequate ventilation. Do not get in eyes, on skin, or on clothing. Avoid ingestion and inhalation. Avoid dust formation.

Storage Keep containers tightly closed in a dry, cool and well-ventilated place.

8. Exposure controls / personal protection

Exposure Guidelines

Component	ACGIH TLV	OSHA PEL	NIOSH IDLH	Mexico OEL (TWA)
2-Methylnaphthalene	TWA: 0.5 ppm Skin			TWA: 0.5 ppm

Legend

ACGIH - American Conference of Governmental Industrial Hygienists

Engineering Measures Ensure that eyewash stations and safety showers are close to the workstation location.

Personal Protective Equipment

Eye/face Protection Wear appropriate protective eyeglasses or chemical safety goggles as described by OSHA's eye and face protection regulations in 29 CFR 1910.133 or European Standard EN166.

Skin and body protection Wear appropriate protective gloves and clothing to prevent skin exposure.

Respiratory Protection Follow the OSHA respirator regulations found in 29 CFR 1910.134 or European Standard EN 149. Use a NIOSH/MSHA or European Standard EN 149 approved respirator if exposure limits are exceeded or if irritation or other symptoms are experienced.

Hygiene Measures Handle in accordance with good industrial hygiene and safety practice.

9. Physical and chemical properties

Physical State	Solid
Appearance	No information available
Odor	Odorless
Odor Threshold	No information available
pH	
Melting Point/Range	37 - 38 °C / 98.6 - 100.4 °F
Boiling Point/Range	241.1 °C / 466 °F
Flash Point	No information available
Evaporation Rate	Not applicable
Flammability (solid,gas)	No information available
Flammability or explosive limits	
Upper	No data available
Lower	No data available
Vapor Pressure	< 1 mmHg @ 25 °C
Vapor Density	Not applicable
Specific Gravity	1.0000
Solubility	Insoluble in water
Partition coefficient; n-octanol/water	No data available
Autoignition Temperature	No information available
Decomposition Temperature	No information available
Viscosity	Not applicable
Molecular Formula	C11H10
Molecular Weight	142.20

10. Stability and reactivity

Reactive Hazard None known, based on information available

Stability Stable under normal conditions.

Conditions to Avoid Incompatible products.

Incompatible Materials Strong oxidizing agents

Hazardous Decomposition Products None under normal use conditions

Hazardous Polymerization Hazardous polymerization does not occur.

Hazardous Reactions None under normal processing.

11. Toxicological information

Acute Toxicity

Product Information

Component Information

Component	LD50 Oral	LD50 Dermal	LC50 Inhalation
2-Methylnaphthalene	LD50 = 1630 mg/kg (Rat)	Not listed	Not listed

Toxicologically Synergistic Products No information available

Delayed and immediate effects as well as chronic effects from short and long-term exposure

Irritation No information available

Sensitization No information available

Carcinogenicity The table below indicates whether each agency has listed any ingredient as a carcinogen.

Component	CAS-No	IARC	NTP	ACGIH	OSHA	Mexico
2-Methylnaphthalene	91-57-6	Not listed	Not listed	Not listed	Not listed	Not listed

Mutagenic Effects No information available

Reproductive Effects No information available.

Developmental Effects No information available.

Teratogenicity No information available.

STOT - single exposure Respiratory system

STOT - repeated exposure None known

Aspiration hazard No information available

Symptoms / effects,both acute and delayed No information available

Endocrine Disruptor Information No information available

Other Adverse Effects The toxicological properties have not been fully investigated.

12. Ecological information

Ecotoxicity

Toxic to aquatic organisms, may cause long-term adverse effects in the aquatic environment. The product contains following substances which are hazardous for the environment.

Component	Freshwater Algae	Freshwater Fish	Microtox	Water Flea
2-Methylnaphthalene	Not listed	Pimephales promelas:LC50 = 2.5mg/L	Not listed	EC50 = 1.5 mg/L/48h

Persistence and Degradability Persistence is unlikely

Bioaccumulation/ Accumulation No information available.

Mobility No information available.

Component	log Pow
2-Methylnaphthalene	3.86

13. Disposal considerations

Waste Disposal Methods Chemical waste generators must determine whether a discarded chemical is classified as a hazardous waste. Chemical waste generators must also consult local, regional, and national hazardous waste regulations to ensure complete and accurate classification.

14. Transport information

DOT Not regulated
TDG Not regulated
IATA Not regulated
IMDG/IMO Not regulated

15. Regulatory information

United States of America Inventory

Component	CAS-No	TSCA	TSCA Inventory notification - Active/Inactive	TSCA - EPA Regulatory Flags
2-Methylnaphthalene	91-57-6	X	ACTIVE	-

Legend:
TSCA - Toxic Substances Control Act, (40 CFR Part 710)
X - Listed
'-' - Not Listed

TSCA 12(b) - Notices of Export Not applicable

International Inventories
Canada (DSL/NDSL), Europe (EINECS/ELINCS/NLP), Philippines (PICCS), Japan (ENCS), Australia (AICS), China (IECSC), Korea (ECL).

Component	CAS-No	DSL	NDSL	EINECS	PICCS	ENCS	AICS	IECSC	KECL
2-Methylnaphthalene	91-57-6	X	-	202-078-3	X	X	X	X	KE-24449

U.S. Federal Regulations

SARA 313 Not applicable

SARA 311/312 Hazard Categories See section 2 for more information

CWA (Clean Water Act) Not applicable

Clean Air Act Not applicable

OSHA - Occupational Safety and Health Administration Not applicable

CERCLA Not applicable

California Proposition 65 This product does not contain any Proposition 65 chemicals.

U.S. State Right-to-Know Regulations

Component	Massachusetts	New Jersey	Pennsylvania	Illinois	Rhode Island
2-Methylnaphthalene	-	X	-	-	-

U.S. Department of Transportation
Reportable Quantity (RQ): N
DOT Marine Pollutant N
DOT Severe Marine Pollutant N

U.S. Department of Homeland Security This product does not contain any DHS chemicals.

Other International Regulations

Mexico - Grade	No information available

16. Other information

Prepared By	Health, Safety and Environmental Department Email: tech@alfa.com www.alfa.com
Revision Date	14-Feb-2020
Print Date	14-Feb-2020
Revision Summary	SDS authoring systems update, replaces ChemGes SDS No. 91-57-6/3.

Disclaimer

The information provided in this Safety Data Sheet is correct to the best of our knowledge, information and belief at the date of its publication. The information given is designed only as a guidance for safe handling, use, processing, storage, transportation, disposal and release and is not to be considered a warranty or quality specification. The information relates only to the specific material designated and may not be valid for such material used in combination with any other materials or in any process, unless specified in the text

End of SDS

SAFETY DATA SHEET

Creation Date 01-May-2012 **Revision Date** 24-Dec-2021 **Revision Number** 5

1. Identification

Product Name **Phenanthrene**

Cat No. : **AC130090000; AC130090050; AC130090500; AC130095000**

CAS No 85-01-8
Synonyms No information available

Recommended Use Laboratory chemicals.
Uses advised against Food, drug, pesticide or biocidal product use.

Details of the supplier of the safety data sheet

Company
Fisher Scientific Company
One Reagent Lane
Fair Lawn, NJ 07410
Tel: (201) 796-7100

Acros Organics
One Reagent Lane
Fair Lawn, NJ 07410

Emergency Telephone Number For information **US** call: 001-800-ACROS-01 / **Europe** call: +32 14 57 52 11
Emergency Number **US:**001-201-796-7100 / **Europe:** +32 14 57 52 99
CHEMTREC Tel. No.**US:**001-800-424-9300 / **Europe:**001-703-527-3887

2. Hazard(s) identification

Classification
This chemical is considered hazardous by the 2012 OSHA Hazard Communication Standard (29 CFR 1910.1200)

Acute oral toxicity	Category 4

Label Elements

Signal Word
Warning

Hazard Statements
Harmful if swallowed



Precautionary Statements
Prevention
Wash face, hands and any exposed skin thoroughly after handling
Do not eat, drink or smoke when using this product
Ingestion
IF SWALLOWED: Call a POISON CENTER or doctor/physician if you feel unwell
Rinse mouth
Disposal
Dispose of contents/container to an approved waste disposal plant
Hazards not otherwise classified (HNOC)
Very toxic to aquatic life with long lasting effects

3. Composition/Information on Ingredients

Component	CAS No	Weight %
Phenanthrene	85-01-8	>95

4. First-aid measures

General Advice If symptoms persist, call a physician.

Eye Contact Rinse immediately with plenty of water, also under the eyelids, for at least 15 minutes. Get medical attention.

Skin Contact Get medical attention. Wash off immediately with plenty of water for at least 15 minutes.

Inhalation Remove to fresh air. Get medical attention. If not breathing, give artificial respiration.

Ingestion Clean mouth with water and drink afterwards plenty of water. Get medical attention if symptoms occur.

Most important symptoms and effects None reasonably foreseeable.

Notes to Physician Treat symptomatically

5. Fire-fighting measures

Suitable Extinguishing Media Water spray, carbon dioxide (CO2), dry chemical, alcohol-resistant foam.

Unsuitable Extinguishing Media No information available

Flash Point No information available
Method - No information available

Autoignition Temperature No information available

Explosion Limits
Upper No data available
Lower No data available

Sensitivity to Mechanical Impact No information available
Sensitivity to Static Discharge No information available

Specific Hazards Arising from the Chemical
Do not allow run-off from fire-fighting to enter drains or water courses.

Hazardous Combustion Products
Carbon monoxide (CO). Carbon dioxide (CO_2).
Protective Equipment and Precautions for Firefighters
As in any fire, wear self-contained breathing apparatus pressure-demand, MSHA/NIOSH (approved or equivalent) and full protective gear.

NFPA

Health	Flammability	Instability	Physical hazards
1	1	0	N/A

6. Accidental release measures

Personal Precautions Ensure adequate ventilation. Use personal protective equipment as required. Avoid dust formation.

Environmental Precautions Do not flush into surface water or sanitary sewer system. Do not allow material to contaminate ground water system. Prevent product from entering drains. Local authorities should be advised if significant spillages cannot be contained.

Methods for Containment and Clean Up Sweep up and shovel into suitable containers for disposal. Keep in suitable, closed containers for disposal.

7. Handling and storage

Handling Wear personal protective equipment/face protection. Ensure adequate ventilation. Do not get in eyes, on skin, or on clothing. Avoid ingestion and inhalation. Avoid dust formation.

Storage. Keep containers tightly closed in a dry, cool and well-ventilated place. Incompatible Materials. Strong oxidizing agents.

8. Exposure controls / personal protection

Exposure Guidelines This product does not contain any hazardous materials with occupational exposure limitsestablished by the region specific regulatory bodies.

Component	ACGIH TLV	OSHA PEL	NIOSH IDLH	Mexico OEL (TWA)
Phenanthrene		TWA: 0.2 mg/m³		

Engineering Measures Ensure adequate ventilation, especially in confined areas.

Personal Protective Equipment

Eye/face Protection Wear appropriate protective eyeglasses or chemical safety goggles as described by OSHA's eye and face protection regulations in 29 CFR 1910.133 or European Standard EN166.

Skin and body protection Wear appropriate protective gloves and clothing to prevent skin exposure.

Respiratory Protection Follow the OSHA respirator regulations found in 29 CFR 1910.134 or European Standard EN 149. Use a NIOSH/MSHA or European Standard EN 149 approved respirator if exposure limits are exceeded or if irritation or other symptoms are experienced.

Hygiene Measures Handle in accordance with good industrial hygiene and safety practice.

9. Physical and chemical properties

Physical State	Solid
Appearance	Beige
Odor	Odorless
Odor Threshold	No information available
pH	No information available
Melting Point/Range	95 - 101 °C / 203 - 213.8 °F
Boiling Point/Range	336 °C / 636.8 °F
Flash Point	No information available
Evaporation Rate	Not applicable
Flammability (solid,gas)	No information available
Flammability or explosive limits	
Upper	No data available
Lower	No data available
Vapor Pressure	1 mmHg @ 116 °C
Vapor Density	Not applicable
Specific Gravity	1.063
Solubility	Insoluble in water
Partition coefficient; n-octanol/water	No data available
Autoignition Temperature	No information available
Decomposition Temperature	No information available
Viscosity	Not applicable
Molecular Formula	C14 H10
Molecular Weight	178.23

10. Stability and reactivity

Reactive Hazard None known, based on information available

Stability Stable under normal conditions.

Conditions to Avoid Incompatible products. Excess heat. Avoid dust formation.

Incompatible Materials Strong oxidizing agents

Hazardous Decomposition Products Carbon monoxide (CO), Carbon dioxide (CO_2)

Hazardous Polymerization Hazardous polymerization does not occur.

Hazardous Reactions None under normal processing.

11. Toxicological information

Acute Toxicity

Product Information

Component Information

Component	LD50 Oral	LD50 Dermal	LC50 Inhalation
Phenanthrene	1.8 g/kg (Rat)	Not listed	Not listed

Toxicologically Synergistic Products No information available

Delayed and immediate effects as well as chronic effects from short and long-term exposure

Irritation No information available

Sensitization No information available

Carcinogenicity The table below indicates whether each agency has listed any ingredient as a carcinogen.

Component	CAS No	IARC	NTP	ACGIH	OSHA	Mexico

Phenanthrene	85-01-8	Not listed	Not listed	Not listed	Not listed	Not listed

Mutagenic Effects No information available

Reproductive Effects No information available.

Developmental Effects No information available.

Teratogenicity No information available.

STOT - single exposure None known
STOT - repeated exposure None known

Aspiration hazard No information available

Symptoms / effects,both acute and delayed No information available

Endocrine Disruptor Information No information available

Other Adverse Effects The toxicological properties have not been fully investigated.

12. Ecological information

Ecotoxicity

Very toxic to aquatic organisms, may cause long-term adverse effects in the aquatic environment. The product contains following substances which are hazardous for the environment.

Component	Freshwater Algae	Freshwater Fish	Microtox	Water Flea
Phenanthrene	Not listed	LC50 = 3.2 mg/L 96h	Not listed	LC50 = 0.35 mg/L 48h

Persistence and Degradability May persist

Bioaccumulation/ Accumulation No information available.

Mobility . Is not likely mobile in the environment due its low water solubility.

Component	log Pow
Phenanthrene	4.5

13. Disposal considerations

Waste Disposal Methods Chemical waste generators must determine whether a discarded chemical is classified as a hazardous waste. Chemical waste generators must also consult local, regional, and national hazardous waste regulations to ensure complete and accurate classification.

14. Transport information

DOT

UN-No UN3077
Proper Shipping Name Environmentally hazardous substances, solid, n.o.s.
Hazard Class 9
Packing Group III

TDG

UN-No UN3077
Proper Shipping Name Environmentally hazardous substances, solid, n.o.s.
Hazard Class 9
Packing Group III

IATA

UN-No UN3077
Proper Shipping Name ENVIRONMENTALLY HAZARDOUS SUBSTANCE, SOLID, N.O.S.*
Hazard Class 9
Packing Group III

IMDG/IMO

UN-No	UN3077
Proper Shipping Name	Environmentally hazardous substances, solid, n.o.s.
Hazard Class	9
Packing Group	III

15. Regulatory information

United States of America Inventory

Component	CAS No	TSCA	TSCA Inventory notification - Active-Inactive	TSCA - EPA Regulatory Flags
Phenanthrene	85-01-8	X	ACTIVE	-

Legend:
TSCA US EPA (TSCA) - Toxic Substances Control Act, (40 CFR Part 710)
X - Listed
'-' - Not Listed

TSCA 12(b) - Notices of Export Not applicable

International Inventories
Canada (DSL/NDSL), Europe (EINECS/ELINCS/NLP), Philippines (PICCS), Japan (ENCS), Japan (ISHL), Australia (AICS), China (IECSC), Korea (KECL).

Component	CAS No	DSL	NDSL	EINECS	PICCS	ENCS	ISHL	AICS	IECSC	KECL
Phenanthrene	85-01-8	X	-	201-581-5	X	X	X	X	X	KE-28202

KECL - NIER number or KE number (http://ncis.nier.go.kr/en/main.do)

U.S. Federal Regulations

SARA 313

Component	CAS No	Weight %	SARA 313 - Threshold Values %
Phenanthrene	85-01-8	>95	1.0 0.1

SARA 311/312 Hazard Categories See section 2 for more information

CWA (Clean Water Act)

Component	CWA - Hazardous Substances	CWA - Reportable Quantities	CWA - Toxic Pollutants	CWA - Priority Pollutants
Phenanthrene	-	-	-	X

Clean Air Act Not applicable

OSHA - Occupational Safety and Health Administration Not applicable

CERCLA This material, as supplied, contains one or more substances regulated as a hazardous substance under the Comprehensive Environmental Response Compensation and Liability Act (CERCLA) (40 CFR 302)

Component	Hazardous Substances RQs	CERCLA EHS RQs
Phenanthrene	5000 b	-

California Proposition 65 This product does not contain any Proposition 65 chemicals.

U.S. State Right-to-Know Regulations

Component	Massachusetts	New Jersey	Pennsylvania	Illinois	Rhode Island
Phenanthrene	X	X	X	-	-

U.S. Department of Transportation
Reportable Quantity (RQ): Y
DOT Marine Pollutant N
DOT Severe Marine Pollutant N

U.S. Department of Homeland Security This product does not contain any DHS chemicals.

Other International Regulations

Mexico - Grade No information available

Authorisation/Restrictions according to EU REACH

Component	REACH (1907/2006) - Annex XIV - Substances Subject to Authorization	REACH (1907/2006) - Annex XVII - Restrictions on Certain Dangerous Substances	REACH Regulation (EC 1907/2006) article 59 - Candidate List of Substances of Very High Concern (SVHC)
Phenanthrene	-	-	SHVC Candidate list - 201-581-5 - vPvB (Article 57e)

After the sunset date the use of this substance requires either an authorization or can only be used for exempted uses, e.g. use in scientific research and development which includes routine analytics or use as intermediate.

https://echa.europa.eu/authorisation-list
https://echa.europa.eu/candidate-list-table

Safety, health and environmental regulations/legislation specific for the substance or mixture

Component	CAS No	OECD HPV	Persistent Organic Pollutant	Ozone Depletion Potential	Restriction of Hazardous Substances (RoHS)
Phenanthrene	85-01-8	Not applicable	Not applicable	Not applicable	Not applicable

Component	CAS No	Seveso III Directive (2012/18/EC) - Qualifying Quantities for Major Accident Notification	Seveso III Directive (2012/18/EC) - Qualifying Quantities for Safety Report Requirements	Rotterdam Convention (PIC)	Basel Convention (Hazardous Waste)
Phenanthrene	85-01-8	Not applicable	Not applicable	Not applicable	Not applicable

16. Other information

Prepared By Regulatory Affairs
Thermo Fisher Scientific
Email: EMSDS.RA@thermofisher.com

Creation Date 01-May-2012
Revision Date 24-Dec-2021
Print Date 24-Dec-2021
Revision Summary This document has been updated to comply with the US OSHA HazCom 2012 Standard replacing the current legislation under 29 CFR 1910.1200 to align with the Globally Harmonized System of Classification and Labeling of Chemicals (GHS).

Disclaimer
The information provided in this Safety Data Sheet is correct to the best of our knowledge, information and belief at the date of its publication. The information given is designed only as a guidance for safe handling, use, processing, storage, transportation, disposal and release and is not to be considered a warranty or quality specification. The information

relates only to the specific material designated and may not be valid for such material used in combination with any other materials or in any process, unless specified in the text

End of SDS

SAFETY DATA SHEET

Version 6.3
Revision Date 13.12.2021
Print Date 08.10.2022

SECTION 1: Identification of the substance/mixture and of the company/undertaking

1.1 Product identifiers

Product name : Ethylbenzene

Product Number : 296848
Brand : Sigma-Aldrich
Index-No. : 601-023-00-4
CAS-No. : 100-41-4

1.2 Relevant identified uses of the substance or mixture and uses advised against

Identified uses : Laboratory chemicals, Synthesis of substances

1.3 Details of the supplier of the safety data sheet

Company : SIGMA-ALDRICH CANADA LTD.
2149 WINSTON PARK DRIVE
OAKVILLE ON L6H 6J8
CANADA

Telephone : +1 905 829-9500
Fax : +1 905 829-9292

1.4 Emergency telephone

Emergency Phone # : 800-424-9300 CHEMTREC (USA)
+1-703-527-3887 CHEMTREC (International)
24 Hours/day; 7 Days/week

SECTION 2: Hazards identification

2.1 Classification of the substance or mixture

GHS Classification in accordance with Hazardous Products Regulations (HPR) (SOR/2015-17)

Flammable liquids (Category 2), H225
Acute toxicity, Inhalation (Category 4), H332
Specific target organ toxicity - repeated exposure (Category 2), hearing organs, H373
Aspiration hazard (Category 1), H304
Short-term (acute) aquatic hazard (Category 2), H401
Long-term (chronic) aquatic hazard (Category 3), H412

For the full text of the H-Statements mentioned in this Section, see Section 16.

2.2 GHS Label elements, including precautionary statements

The life science business of Merck KGaA, Darmstadt, Germany
operates as MilliporeSigma in the US and Canada

Pictogram	
Signal word	Danger

Hazard statement(s)

H225	Highly flammable liquid and vapor.
H304	May be fatal if swallowed and enters airways.
H332	Harmful if inhaled.
H373	May cause damage to organs (hearing organs) through prolonged or repeated exposure.
H401	Toxic to aquatic life.
H412	Harmful to aquatic life with long lasting effects.

Precautionary statement(s)

P210	Keep away from heat, hot surfaces, sparks, open flames and other ignition sources. No smoking.
P233	Keep container tightly closed.
P240	Ground and bond container and receiving equipment.
P241	Use explosion-proof electrical/ ventilating/ lighting/ equipment.
P242	Use non-sparking tools.
P243	Take action to prevent static discharges.
P260	Do not breathe dust/ fume/ gas/ mist/ vapors/ spray.
P271	Use only outdoors or in a well-ventilated area.
P273	Avoid release to the environment.
P280	Wear protective gloves/ protective clothing/ eye protection/ face protection.
P301 + P310	IF SWALLOWED: Immediately call a POISON CENTER/ doctor.
P303 + P361 + P353	IF ON SKIN (or hair): Take off immediately all contaminated clothing. Rinse skin with water.
P304 + P340 + P312	IF INHALED: Remove person to fresh air and keep comfortable for breathing. Call a POISON CENTER/ doctor if you feel unwell.
P314	Get medical advice/ attention if you feel unwell.
P331	Do NOT induce vomiting.
P370 + P378	In case of fire: Use dry sand, dry chemical or alcohol-resistant foam to extinguish.
P403 + P235	Store in a well-ventilated place. Keep cool.
P405	Store locked up.
P501	Dispose of contents/ container to an approved waste disposal plant.

2.3 Hazards not otherwise classified (HNOC) or not covered by GHS

- none

SECTION 3: Composition/information on ingredients

3.1 Substances

Formula	:	C_8H_{10}
Molecular weight	:	106.17 g/mol
CAS-No.	:	100-41-4
EC-No.	:	202-849-4
Index-No.	:	601-023-00-4

The life science business of Merck KGaA, Darmstadt, Germany
operates as MilliporeSigma in the US and Canada

Component	Classification	Concentration *
ethylbenzene		
	Flam. Liq. 2; Acute Tox. 4; STOT RE 2; Asp. Tox. 1; Aquatic Acute 2; Aquatic Chronic 3; H225, H332, H373, H304, H401, H412	<= 100 %
* Weight %		

For the full text of the H-Statements mentioned in this Section, see Section 16.

SECTION 4: First aid measures

4.1 Description of first-aid measures

General advice
Show this material safety data sheet to the doctor in attendance.

If inhaled
After inhalation: fresh air. Immediately call in physician. If breathing stops: immediately apply artificial respiration, if necessary also oxygen.

In case of skin contact
In case of skin contact: Take off immediately all contaminated clothing. Rinse skin with water/ shower. Consult a physician.

In case of eye contact
After eye contact: rinse out with plenty of water. Call in ophthalmologist. Remove contact lenses.

If swallowed
After swallowing: caution if victim vomits. Risk of aspiration! Keep airways free. Pulmonary failure possible after aspiration of vomit. Call a physician immediately.

4.2 Most important symptoms and effects, both acute and delayed
The most important known symptoms and effects are described in the labelling (see section 2.2) and/or in section 11

4.3 Indication of any immediate medical attention and special treatment needed
No data available

SECTION 5: Firefighting measures

5.1 Extinguishing media

Suitable extinguishing media
Water Carbon dioxide (CO2) Foam Dry powder

Unsuitable extinguishing media
For this substance/mixture no limitations of extinguishing agents are given.

5.2 Special hazards arising from the substance or mixture
Carbon oxides
Combustible.
Pay attention to flashback.

The life science business of Merck KGaA, Darmstadt, Germany
operates as MilliporeSigma in the US and Canada

Vapors are heavier than air and may spread along floors.
Development of hazardous combustion gases or vapours possible in the event of fire.
Forms explosive mixtures with air at ambient temperatures.

5.3 Advice for firefighters

Stay in danger area only with self-contained breathing apparatus. Prevent skin contact by keeping a safe distance or by wearing suitable protective clothing.

5.4 Further information

Remove container from danger zone and cool with water. Prevent fire extinguishing water from contaminating surface water or the ground water system.

SECTION 6: Accidental release measures

6.1 Personal precautions, protective equipment and emergency procedures

Advice for non-emergency personnel: Do not breathe vapors, aerosols. Avoid substance contact. Ensure adequate ventilation. Keep away from heat and sources of ignition.
Evacuate the danger area, observe emergency procedures, consult an expert.
For personal protection see section 8.

6.2 Environmental precautions

Do not let product enter drains. Risk of explosion.

6.3 Methods and materials for containment and cleaning up

Cover drains. Collect, bind, and pump off spills. Observe possible material restrictions (see sections 7 and 10). Take up carefully with liquid-absorbent material (e.g. Chemizorb®). Dispose of properly. Clean up affected area.

6.4 Reference to other sections

For disposal see section 13.

SECTION 7: Handling and storage

7.1 Precautions for safe handling

Advice on safe handling
Work under hood. Do not inhale substance/mixture. Avoid generation of vapours/aerosols.

Advice on protection against fire and explosion
Keep away from open flames, hot surfaces and sources of ignition.Take precautionary measures against static discharge.

Hygiene measures
Change contaminated clothing. Preventive skin protection recommended. Wash hands after working with substance.
For precautions see section 2.2.

7.2 Conditions for safe storage, including any incompatibilities

Storage conditions
Keep container tightly closed in a dry and well-ventilated place. Keep away from heat and sources of ignition.

hygroscopic

Storage class
Storage class (TRGS 510): 3: Flammable liquids

The life science business of Merck KGaA, Darmstadt, Germany
operates as MilliporeSigma in the US and Canada

7.3 Specific end use(s)
Apart from the uses mentioned in section 1.2 no other specific uses are stipulated

SECTION 8: Exposure controls/personal protection

8.1 Control parameters

Components with workplace control parameters

Components	CAS-No.	Value	Control parameters	Basis
ethylbenzene	100-41-4	STEL	125 ppm 543 mg/m3	Canada. Alberta, Occupational Health and Safety Code (table 2: OEL)
		TWA	100 ppm 434 mg/m3	Canada. Alberta, Occupational Health and Safety Code (table 2: OEL)
		TWA	20 ppm	Canada. British Columbia OEL
Remarks	IARC '2B' applies to substances deemed possibly carcinogenic to humans.			
		TWAEV	20 ppm	Québec. Regulation respecting occupational health and safety, Schedule 1, Part 1: Permissible exposure values for airborne contaminants
	Carcinogenic effect detected in animals. Results of studies relating to the carcinogenocity of these substances in animals are not necessarily applicable to humans.			

8.2 Exposure controls

Appropriate engineering controls
Change contaminated clothing. Preventive skin protection recommended. Wash hands after working with substance.

Personal protective equipment

Eye/face protection
Use equipment for eye protection tested and approved under appropriate government standards such as NIOSH (US) or EN 166(EU). Safety glasses

Skin protection
This recommendation applies only to the product stated in the safety data sheet, supplied by us and for the designated use. When dissolving in or mixing with other substances and under conditions deviating from those stated in EN374 please contact the supplier of CE-approved gloves (e.g. KCL GmbH, D-36124 Eichenzell, Internet: www.kcl.de).
Full contact
Material: Viton®
Minimum layer thickness: 0.7 mm
Break through time: 480 min
Material tested:Vitoject® (KCL 890 / Aldrich Z677698, Size M)

The life science business of Merck KGaA, Darmstadt, Germany
operates as MilliporeSigma in the US and Canada

This recommendation applies only to the product stated in the safety data sheet, supplied by us and for the designated use. When dissolving in or mixing with other substances and under conditions deviating from those stated in EN374 please contact the supplier of CE-approved gloves (e.g. KCL GmbH, D-36124 Eichenzell, Internet: www.kcl.de).
Splash contact
Material: Nitrile rubber
Minimum layer thickness: 0.4 mm
Break through time: 10 min
Material tested:Camatril® (KCL 730 / Aldrich Z677442, Size M)

Body Protection
Flame retardant antistatic protective clothing.

Respiratory protection
required when vapours/aerosols are generated. Our recommendations on filtering respiratory protection are based on the following standards: DIN EN 143, DIN 14387 and other accompanying standards relating to the used respiratory protection system.

Control of environmental exposure
Do not let product enter drains. Risk of explosion.

SECTION 9: Physical and chemical properties

9.1 Information on basic physical and chemical properties

a)	Appearance	Form: liquid Color: colorless
b)	Odor	aromatic
c)	Odor Threshold	No data available
d)	pH	No data available
e)	Melting point/freezing point	-94.9 °C (-138.8 °F) at 101.3 hPa - (ECHA)
f)	Initial boiling point and boiling range	136.1 °C 277.0 °F at 1,013.3 hPa
g)	Flash point	23 °C (73 °F) - closed cup - Regulation (EC) No. 440/2008, Annex, A.9
h)	Evaporation rate	No data available
i)	Flammability (solid, gas)	No data available
j)	Upper/lower flammability or explosive limits	Upper explosion limit: 6.7 %(V) Lower explosion limit: 1 %(V)
k)	Vapor pressure	9.52 hPa at 20 °C (68 °F) - OECD Test Guideline 104
l)	Vapor density	No data available
m)	Density	0.87 g/cm3 at 20 °C (68 °F)
	Relative density	0.86 - 0.8720 °C
n)	Water solubility	0.2 g/l at 25 °C (77 °F) - Regulation (EC) No. 440/2008, Annex,

The life science business of Merck KGaA, Darmstadt, Germany
operates as MilliporeSigma in the US and Canada

		A.6 - slightly soluble
o)	Partition coefficient: n-octanol/water	Pow: 4,170; log Pow: 3.6 at 20 °C (68 °F) - Regulation (EC) No. 440/2008, Annex, A.8
p)	Autoignition temperature	430 °C (806 °F) at 1,013 hPa
q)	Decomposition temperature	No data available
r)	Viscosity	0.773 mm2/s at 20 °C (68 °F) - OECD Test Guideline 114 -
s)	Explosive properties	No data available
t)	Oxidizing properties	none

9.2 Other safety information

Surface tension 71.2 mN/m at 23 °C (73 °F)

SECTION 10: Stability and reactivity

10.1 Reactivity

Vapors may form explosive mixture with air.

10.2 Chemical stability

The product is chemically stable under standard ambient conditions (room temperature) .

10.3 Possibility of hazardous reactions

Violent reactions possible with:
Strong oxidizing agents

10.4 Conditions to avoid

Warming.

10.5 Incompatible materials

rubber, various plastics

10.6 Hazardous decomposition products

In the event of fire: see section 5

SECTION 11: Toxicological information

11.1 Information on toxicological effects

Acute toxicity
LD50 Oral - Rat - male and female - 3,500 mg/kg
Remarks: (ECHA)
LC50 Inhalation - Rat - male - 4 h - 17.8 mg/l - vapor

Remarks: (ECHA)
LD50 Dermal - Rabbit - 15,433 mg/kg
Remarks: (RTECS)
No data available

The life science business of Merck KGaA, Darmstadt, Germany
operates as MilliporeSigma in the US and Canada

Skin corrosion/irritation
Skin - Rabbit
Result: Moderate skin irritation - 24 h

Serious eye damage/eye irritation
Eyes - Rabbit
Result: Mild eye irritation
Remarks: (ECHA)

Respiratory or skin sensitization
Patch test: - Human
Result: negative
Remarks: (IUCLID)

Germ cell mutagenicity
Test Type: Mutagenicity (mammal cell test):
Test system: Mouse lymphoma test
Metabolic activation: with and without metabolic activation
Method: OECD Test Guideline 476
Result: negative
Test Type: Ames test
Test system: Salmonella typhimurium
Metabolic activation: with and without metabolic activation
Method: OECD Test Guideline 471
Result: negative
Test Type: Hamster
Test system: ovary
Metabolic activation: with and without metabolic activation
Method: OECD Test Guideline 473
Result: negative

Test Type: Mutagenicity (in vivo mammalian bone-marrow cytogenetic test, chromosomal analysis)
Species: Mouse

Application Route: Inhalation
Method: OECD Test Guideline 474
Result: negative

Carcinogenicity
No data available

Reproductive toxicity
No data available

Specific target organ toxicity - single exposure
No data available

Specific target organ toxicity - repeated exposure
May cause damage to organs through prolonged or repeated exposure. - hearing organs

Aspiration hazard
May be fatal if swallowed and enters airways.

11.2 Additional Information

Repeated dose toxicity - Rat - male and female - Oral - 90 d - NOAEL (No observed adverse effect level) - 75 mg/kg - LOAEL (Lowest observed adverse effect level) - 250 mg/kg

RTECS: DA0700000

The life science business of Merck KGaA, Darmstadt, Germany
operates as MilliporeSigma in the US and Canada

Central nervous system depression, Nausea, Headache, Vomiting, Ataxia., Tremors
To the best of our knowledge, the chemical, physical, and toxicological properties have not been thoroughly investigated.

Systemic effects:

CNS disorders
Tiredness
Drowsiness
Dizziness
Convulsions
Headache
narcosis

Handle in accordance with good industrial hygiene and safety practice.

Stomach - Irregularities - Based on Human Evidence

SECTION 12: Ecological information

12.1 Toxicity

Toxicity to fish	semi-static test LC50 - Oncorhynchus mykiss (rainbow trout) - 4.2 mg/l - 96 h (OECD Test Guideline 203)
Toxicity to daphnia and other aquatic invertebrates	static test EC50 - Daphnia magna (Water flea) - 1.8 - 2.4 mg/l - 48 h (US-EPA)
Toxicity to algae	static test EC50 - Pseudokirchneriella subcapitata (green algae) - 3.6 mg/l - 96 h (US-EPA)
Toxicity to bacteria	EC50 - Photobacterium phosphoreum - 9.68 mg/l - 30 min Remarks: (IUCLID)

12.2 Persistence and degradability

Biodegradability	aerobic - Exposure time 28 d Result: ca.79 % - Readily biodegradable. (ISO 14593)

12.3 Bioaccumulative potential

Due to the distribution coefficient n-octanol/water, accumulation in organisms is not expected.

12.4 Mobility in soil

No data available

12.5 Results of PBT and vPvB assessment

PBT/vPvB assessment not available as chemical safety assessment not required/not conducted

12.6 Endocrine disrupting properties

No data available

The life science business of Merck KGaA, Darmstadt, Germany
operates as MilliporeSigma in the US and Canada

12.7 Other adverse effects

No data available

SECTION 13: Disposal considerations

13.1 Waste treatment methods

Product

Waste material must be disposed of in accordance with the national and local regulations. Leave chemicals in original containers. No mixing with other waste. Handle uncleaned containers like the product itself. See www.retrologistik.com for processes regarding the return of chemicals and containers, or contact us there if you have further questions.

SECTION 14: Transport information

TDG

UN number: 1175 Class: 3 Packing group: II
Proper shipping name: ETHYLBENZENE
Labels: 3
ERG Code: 130
Marine pollutant: no

IMDG

UN number: 1175 Class: 3 Packing group: II EMS-No: F-E, S-D
Proper shipping name: ETHYLBENZENE

IATA

UN number: 1175 Class: 3 Packing group: II
Proper shipping name: Ethylbenzene

SECTION 15: Regulatory information

This product has been classified in accordance with the hazard criteria of the Hazardous Products Regulations (HPR) and the SDS contains all the information required by the HPR.

SECTION 16: Other information

Further information

The above information is believed to be correct but does not purport to be all inclusive and shall be used only as a guide. The information in this document is based on the present state of our knowledge and is applicable to the product with regard to appropriate safety precautions. It does not represent any guarantee of the properties of the product. Sigma-Aldrich Corporation and its Affiliates shall not be held liable for any damage resulting from handling or from contact with the above product. See www.sigma-aldrich.com and/or the reverse side of invoice or packing slip for additional terms and conditions of sale.

Copyright 2020 Sigma-Aldrich Co. LLC. License granted to make unlimited paper copies for internal use only.

The life science business of Merck KGaA, Darmstadt, Germany
operates as MilliporeSigma in the US and Canada

The branding on the header and/or footer of this document may temporarily not visually match the product purchased as we transition our branding. However, all of the information in the document regarding the product remains unchanged and matches the product ordered. For further information please contact mlsbranding@sial.com.

Version: 6.3 Revision Date: 13.12.2021 Print Date: 08.10.2022

The life science business of Merck KGaA, Darmstadt, Germany
operates as MilliporeSigma in the US and Canada







Material Safety Data Sheet
Pyrene MSDS

Section 1: Chemical Product and Company Identification

Product Name: Pyrene

Catalog Codes: SLP3868

CAS#: 129-00-00

RTECS: UR2450000

TSCA: TSCA 8(b) inventory: Pyrene

CI#: Not available.

Synonym: Benzo(D,E,F)phenanthrene

Chemical Name: Pyrene

Chemical Formula: C16-H10

Contact Information:

Sciencelab.com, Inc.
14025 Smith Rd.
Houston, Texas 77396

US Sales: **1-800-901-7247**
International Sales: **1-281-441-4400**

Order Online: ScienceLab.com

CHEMTREC (24HR Emergency Telephone), call: 1-800-424-9300

International CHEMTREC, call: 1-703-527-3887

For non-emergency assistance, call: 1-281-441-4400

Section 2: Composition and Information on Ingredients

Composition:

Name	CAS #	% by Weight
Pyrene	129-00-00	100

Toxicological Data on Ingredients: Pyrene: ORAL (LD50): Acute: 2700 mg/kg [Rat]. 800 mg/kg [Mouse].

Section 3: Hazards Identification

Potential Acute Health Effects:
Hazardous in case of eye contact (irritant), of ingestion, of inhalation. Slightly hazardous in case of skin contact (irritant, permeator).

Potential Chronic Health Effects:
CARCINOGENIC EFFECTS: 3 (Not classifiable for human.) by IARC. MUTAGENIC EFFECTS: Mutagenic for mammalian somatic cells. Mutagenic for bacteria and/or yeast. TERATOGENIC EFFECTS: Not available. DEVELOPMENTAL TOXICITY: Not available. Repeated or prolonged exposure is not known to aggravate medical condition.

Section 4: First Aid Measures

Eye Contact:
Check for and remove any contact lenses. In case of contact, immediately flush eyes with plenty of water for at least 15 minutes. Get medical attention.

Skin Contact:
In case of contact, immediately flush skin with plenty of water. Cover the irritated skin with an emollient. Remove contaminated clothing and shoes. Wash clothing before reuse. Thoroughly clean shoes before reuse. Get medical attention.

Serious Skin Contact: Not available.

Inhalation:
If inhaled, remove to fresh air. If not breathing, give artificial respiration. If breathing is difficult, give oxygen. Get medical attention.

Serious Inhalation: Not available.

Ingestion:
Do NOT induce vomiting unless directed to do so by medical personnel. Never give anything by mouth to an unconscious person. If large quantities of this material are swallowed, call a physician immediately. Loosen tight clothing such as a collar, tie, belt or waistband.

Serious Ingestion: Not available.

Section 5: Fire and Explosion Data

Flammability of the Product: May be combustible at high temperature.

Auto-Ignition Temperature: Not available.

Flash Points: Not available.

Flammable Limits: Not available.

Products of Combustion: These products are carbon oxides (CO, CO2).

Fire Hazards in Presence of Various Substances:
Slightly flammable to flammable in presence of heat, of combustible materials. Non-flammable in presence of shocks.

Explosion Hazards in Presence of Various Substances:
Risks of explosion of the product in presence of mechanical impact: Not available. Slightly explosive in presence of heat. Non-explosive in presence of open flames and sparks.

Fire Fighting Media and Instructions:
SMALL FIRE: Use DRY chemical powder. LARGE FIRE: Use water spray, fog or foam. Do not use water jet.

Special Remarks on Fire Hazards: Not available.

Special Remarks on Explosion Hazards: Not available.

Section 6: Accidental Release Measures

Small Spill:
Use appropriate tools to put the spilled solid in a convenient waste disposal container. Finish cleaning by spreading water on the contaminated surface and dispose of according to local and regional authority requirements.

Large Spill:
Use a shovel to put the material into a convenient waste disposal container. Finish cleaning by spreading water on the contaminated surface and allow to evacuate through the sanitary system.

Section 7: Handling and Storage

Precautions:
Keep locked up.. Keep away from heat. Keep away from sources of ignition. Empty containers pose a fire risk, evaporate the residue under a fume hood. Ground all equipment containing material. Do not ingest. Do not breathe dust. Avoid contact with eyes. Wear suitable protective clothing. In case of insufficient ventilation, wear suitable respiratory equipment. If ingested,

seek medical advice immediately and show the container or the label. Keep away from incompatibles such as oxidizing agents.

Storage:
Keep container tightly closed. Keep container in a cool, well-ventilated area. Do not store above 24°C (75.2°F). Preferably refrigerate.

Section 8: Exposure Controls/Personal Protection

Engineering Controls:
Use process enclosures, local exhaust ventilation, or other engineering controls to keep airborne levels below recommended exposure limits. If user operations generate dust, fume or mist, use ventilation to keep exposure to airborne contaminants below the exposure limit.

Personal Protection: Safety glasses. Synthetic apron. Gloves (impervious).

Personal Protection in Case of a Large Spill:
Splash goggles. Full suit. Boots. Gloves. Suggested protective clothing might not be sufficient; consult a specialist BEFORE handling this product.

Exposure Limits: Not available.

Section 9: Physical and Chemical Properties

Physical state and appearance: Solid. (Crystalline solid. Powdered solid.)

Odor: Not available.

Taste: Not available.

Molecular Weight: 202.26 g/mole

Color: Yellow.

pH (1% soln/water): Not applicable.

Boiling Point: 404°C (759.2°F)

Melting Point: 151.2°C (304.2°F)

Critical Temperature: Not available.

Specific Gravity: 1.271 @ 23 C (Water = 1)

Vapor Pressure: Not applicable.

Vapor Density: Not available.

Volatility: Not available.

Odor Threshold: Not available.

Water/Oil Dist. Coeff.: The product is more soluble in oil; log(oil/water) = 4.9

Ionicity (in Water): Not available.

Dispersion Properties:
Is not dispersed in cold water, hot water. See solubility in diethyl ether.

Solubility:
Soluble in diethyl ether. Insoluble in cold water, hot water. Pyrene is fairly soluble in organic solvents. It is soluble in alcohol, benzene, carbon disulfide, ether, petroleum ether, and toluene

Section 10: Stability and Reactivity Data

Stability: The product is stable.

Instability Temperature: Not available.

Conditions of Instability: Excess heat, incompatible materials

Incompatibility with various substances: Reactive with oxidizing agents.

Corrosivity: Not available.

Special Remarks on Reactivity: Not available.

Special Remarks on Corrosivity: Not available.

Polymerization: Will not occur.

Section 11: Toxicological Information

Routes of Entry: Inhalation. Ingestion.

Toxicity to Animals: Acute oral toxicity (LD50): 800 mg/kg [Mouse].

Chronic Effects on Humans:
CARCINOGENIC EFFECTS: 3 (Not classifiable for human.) by IARC. MUTAGENIC EFFECTS: Mutagenic for mammalian somatic cells. Mutagenic for bacteria and/or yeast.

Other Toxic Effects on Humans:
Hazardous in case of ingestion, of inhalation. Slightly hazardous in case of skin contact (irritant, permeator).

Special Remarks on Toxicity to Animals: Not available.

Special Remarks on Chronic Effects on Humans:
May affect genetic material (mutagenic). May cause cancer (tumorigenic) according to animal data.

Special Remarks on other Toxic Effects on Humans:
Acute Potential Health Effects: Skin: May cause skin irritation. May be absorbed through skin. Eyes: May cause eye irritation. Conjunctival irritation may be noted. Inhalation: May cause respiratory tract irritaiton. Ingestion: May cause gastrointestinal tract irritation. May affect behavior/Central Nervous System (excitation and muscel spasicity), liver and urinary system, and immune system, and blood.

Section 12: Ecological Information

Ecotoxicity: Ecotoxicity in water (LC50): 1.8 mg/l 48 hours [Water flea].

BOD5 and COD: Not available.

Products of Biodegradation:
Possibly hazardous short term degradation products are not likely. However, long term degradation products may arise.

Toxicity of the Products of Biodegradation: The products of degradation are less toxic than the product itself.

Special Remarks on the Products of Biodegradation: Not available.

Section 13: Disposal Considerations

Waste Disposal:
Waste must be disposed of in accordance with federal, state and local environmental control regulations.

Section 14: Transport Information

DOT Classification: Not a DOT controlled material (United States).

Identification: Not applicable.

Special Provisions for Transport: Not applicable.

Section 15: Other Regulatory Information

Federal and State Regulations:
Connecticut carcinogen reporting list.: Pyrene Illinois chemical safety act: Pyrene New York release reporting list: Pyrene Pennsylvania RTK: Pyrene Massachusetts RTK: Pyrene Massachusetts spill list: Pyrene New Jersey: Pyrene New Jersey spill list: Pyrene Louisiana RTK reporting list: Pyrene Louisiana spill reporting: Pyrene California Director's list of Hazardous Substances: Pyrene TSCA 8(b) inventory: Pyrene TSCA 8(a) CAIR: Pyrene TSCA 8(d) H and S data reporting: Pyrene: June 1, 1987-June1, 1997 SARA 302/304/311/312 extremely hazardous substances: Pyrene CERCLA: Hazardous substances.: Pyrene: 5000 lbs. (2268 kg)

Other Regulations: EINECS: This product is on the European Inventory of Existing Commercial Chemical Substances.

Other Classifications:

WHMIS (Canada): Not controlled under WHMIS (Canada).

DSCL (EEC):
R20/21/22- Harmful by inhalation, in contact with skin and if swallowed. S2- Keep out of the reach of children. S36/37- Wear suitable protective clothing and gloves. S46- If swallowed, seek medical advice immediately and show this container or label.

HMIS (U.S.A.):

Health Hazard: 2

Fire Hazard: 1

Reactivity: 0

Personal Protection: C

National Fire Protection Association (U.S.A.):

Health: 2

Flammability: 1

Reactivity: 0

Specific hazard:

Protective Equipment:
Gloves (impervious). Synthetic apron. Not applicable. Safety glasses.

Section 16: Other Information

References: Not available.

Other Special Considerations: Not available.

Created: 10/09/2005 06:14 PM

Last Updated: 06/09/2012 12:00 PM

The information above is believed to be accurate and represents the best information currently available to us. However, we make no warranty of merchantability or any other warranty, express or implied, with respect to such information, and we assume no liability resulting from its use. Users should make their own investigations to determine the suitability of the information for their particular purposes. In no event shall ScienceLab.com be liable for any claims, losses, or damages of any third party or for

lost profits or any special, indirect, incidental, consequential or exemplary damages, howsoever arising, even if ScienceLab.com has been advised of the possibility of such damages.

Safety Data Sheet

according to Regulation (EC) No. 1907/2006 (REACH)

1,2,4-trimethylbenzene

Version number: GHS 2.0
Replaces version of: 25.02.2016 (GHS 1)

Revision: 13.10.2017

SECTION 1: IDENTIFICATION OF THE SUBSTANCE/MIXTURE AND OF THE COMPANY/UNDERTAKING

1.1 Product identifier

Identification of the substance	**1,2,4-trimethylbenzene**
Registration number (REACH)	01-2119472135-42-xxxx
EC number	202-436-9
Index No	-
CAS number	95-63-6
Additional relevant and available information	Pseudocumene

1.2 Relevant identified uses of the substance or mixture and uses advised against

Relevant identified uses	industrial use (SCC)

1.3 Details of the supplier of the safety data sheet

DHC Solvent Chemie GmbH
Timmerhellstraße 28
D-45478 Mülheim an der Ruhr
Germany

Telephone: +49 (208) 9940-0
Telefax: +49 (208) 9940-150

Competent person responsible for the safety data sheet	Vanessa Manz
e-mail (competent person)	productsafety@dhc-solvent.de

1.4 Emergency telephone number

Emergency information service

Poison centre	
Country	**Telephone**
United Kingdom	+44 1235 239670

SECTION 2: HAZARDS IDENTIFICATION

2.1 Classification of the substance or mixture

Classification according to Regulation (EC) No 1272/2008 (CLP)

Hazard class	Category	Hazard class and category	Hazard statement
flammable liquid	Cat. 3	(Flam. Liq. 3)	H226
acute toxicity (inhal.)	Cat. 4	(Acute Tox. 4)	H332
skin corrosion/irritation	Cat. 2	(Skin Irrit. 2)	H315
serious eye damage/eye irritation	Cat. 2	(Eye Irrit. 2)	H319
specific target organ toxicity - single exposure (respiratory tract irritation)	Cat. 3	(STOT SE 3)	H335
aspiration hazard	Cat. 1	(Asp. Tox. 1)	H304
hazardous to the aquatic environment - chronic hazard	Cat. 2	(Aquatic Chronic 2)	H411

Remarks

For full text of H-phrases: see SECTION 16.
Substance with a community indicative occupational exposure limit value.

The most important adverse physicochemical, human health and environmental effects

May be fatal if swallowed and enters airways.
The product is combustible and can be ignited by potential ignition sources.

2.2 Label elements

Labelling according to Regulation (EC) No 1272/2008 (CLP)

Signal word **Danger**

Pictograms

GHS02, GHS07, GHS08, GHS09



Hazard statements

H226	Flammable liquid and vapour.
H304	May be fatal if swallowed and enters airways.
H315	Causes skin irritation.
H319	Causes serious eye irritation.
H332	Harmful if inhaled.
H335	May cause respiratory irritation.
H411	Toxic to aquatic life with long lasting effects.

Precautionary statements

Precautionary statements - prevention

P210	Keep away from heat, hot surfaces, sparks, open flames and other ignition sources. No smoking.
P243	Take action to prevent static discharges.
P273	Avoid release to the environment.
P280	Wear protective gloves/protective clothing/eye protection/face protection.

Precautionary statements - response

P301+P310	IF SWALLOWED: Immediately call a POISON CENTER/doctor/physician.
P305+P351+P338	IF IN EYES: Rinse cautiously with water for several minutes. Remove contact lenses, if present and easy to do. Continue rinsing.
P331	Do NOT induce vomiting.
P370+P378	In case of fire: Use sand, carbon dioxide or powder extinguisher to extinguish.

Precautionary statements - storage

P403+P233	Store in a well-ventilated place. Keep container tightly closed.
P403+P235	Store in a well-ventilated place. Keep cool.

Precautionary statements - disposal

P501	Dispose of contents/container in accordance with local/regional/national/international regulations.

2.3 Other hazards

According to the results of its assessment, this substance is not a PBT or a vPvB.
Vapour heavier than air, may form an explosive mixture in air: it may be ignited at some distance away from the spill resulting in flashbacks. Flowing product can create electrostatic charge, resulting sparks may ignite or cause an explosion.

SECTION 3: COMPOSITION/INFORMATION ON INGREDIENTS

3.1 Substances

Name of substance	1,2,4-trimethylbenzene
Registration number (REACH)	01-2119472135-42-xxxx
EC number	202-436-9
CAS number	95-63-6
Index No	-
Molecular formula	C9H12

SECTION 4: FIRST AID MEASURES

4.1 Description of first aid measures

General notes

Do not leave affected person unattended. Remove victim out of the danger area. Keep affected person warm, still and covered. Take off immediately all contaminated clothing. In all cases of doubt, or when symptoms persist, seek medical advice. In case of unconsciousness place person in the recovery position. Never give anything by mouth.

Following inhalation

If breathing is irregular or stopped, immediately seek medical assistance and start first aid actions. Provide fresh air.

Following skin contact

Wash with plenty of soap and water.

Following eye contact

Irrigate copiously with clean, fresh water, holding the eyelids apart. Remove contact lenses, if present and easy to do. Continue rinsing. In all cases of doubt, or when symptoms persist, seek medical advice.

Following ingestion

Do NOT induce vomiting. Rinse mouth with water (only if the person is conscious).

4.2 Most important symptoms and effects, both acute and delayed

Choking and suffocation risks. Deficits in perception and coordination, reaction time, or sleepiness.

4.3 Indication of any immediate medical attention and special treatment needed

none

SECTION 5: FIREFIGHTING MEASURES

5.1 Extinguishing media

Suitable extinguishing media

carbon dioxide (CO2), BC-powder, foam, alcohol resistant foam, water mist

Unsuitable extinguishing media

water jet

5.2 Special hazards arising from the substance or mixture

Solvent vapours are heavier than air and may spread along floors. In case of insufficient ventilation and/or in use, may form flammable/explosive vapour-air mixture. May produce toxic fumes of carbon monoxide if burning.

Hazardous combustion products

carbon monoxide (CO), carbon dioxide (CO2)

5.3 Advice for firefighters

Wear breathing apparatus if exposed to vapours/dust/spray/gases. Co-ordinate firefighting measures to the fire surroundings. Do not allow firefighting water to enter drains or water courses. Collect contaminated firefighting water separately. Fight fire with normal precautions from a reasonable distance. Keep containers cool with water spray.

SECTION 6: ACCIDENTAL RELEASE MEASURES

6.1 Personal precautions, protective equipment and emergency procedures

For non-emergency personnel

Remove persons to safety. Avoid inhaling sprayed product. Wearing of suitable protective equipment (including personal protective equipment referred to under Section 8 of the safety data sheet) to prevent any contamination of skin, eyes and personal clothing. Remove/take off immediately all contaminated clothing and wash it before reuse.

For emergency responders

Wear breathing apparatus if exposed to vapours/dust/spray/gases.

6.2 Environmental precautions

Keep away from drains, surface and ground water. Retain contaminated washing water and dispose of it. If substance has entered a water course or sewer, inform the responsible authority.

6.3 Methods and material for containment and cleaning up

Advices on how to contain a spill

Covering of drains.

Advices on how to clean up a spill

Wipe up with absorbent material (e.g. cloth, fleece). Collect spillage (sawdust. , kieselgur (diatomite), sand, universal binder).

Appropriate containment techniques

Use of adsorbent materials. - covering of drains

Other information relating to spills and releases

Place in appropriate containers for disposal. Ventilate affected area.

6.4 Reference to other sections

Hazardous combustion products: see section 5. Personal protective equipment: see section 8. Incompatible materials: see section 10. Disposal considerations: see section 13.

SECTION 7: HANDLING AND STORAGE

7.1 Precautions for safe handling

Recommendations

• Measures to prevent fire as well as aerosol and dust generation

Use only in well-ventilated areas. Use local and general ventilation. Ground/bond container and receiving equipment. Use explosion-proof electrical/ventilating/lighting equipment. Use only non-sparking tools.

• Warning

Vapours are heavier than air, spread along floors and form explosive mixtures with air.

Advice on general occupational hygiene

Wash hands after use. Do not eat, drink and smoke in work areas. Remove contaminated clothing and protective equipment before entering eating areas. Never keep food or drink in the vicinity of chemicals. Never place chemicals in containers that are normally used for food or drink. Keep away from food, drink and animal feedingstuffs.

7.2 Conditions for safe storage, including any incompatibilities

Managing of associated risks

• Explosive atmospheres

Keep container tightly closed and in a well-ventilated place. Use local and general ventilation. Keep cool. Protect from sunlight.

• Flammability hazards

Keep away from sources of ignition - No smoking. Keep away from heat, hot surfaces, sparks, open flames and other ignition sources. No smoking. Take precautionary measures against static discharge. Protect from sunlight.

Incompatible substances or mixtures

Observe hints for combined storage.

Consideration of other advice

• Ventilation requirements

Keep any substance that emits harmful vapours or gases in a place that allows these to be permanently extracted. Use local and general ventilation. Ground/bond container and receiving equipment.

• Packaging compatibilities

Only packagings which are approved (e.g. acc. to ADR) may be used.
Suitable materials and coatings for container/equipment: Carbon Steel, Stainless Steel, Polyester, Polytetrafluoroethylene (PTFE), Polyvinyl Alcohol (PVA)
Unsuitable Materials and Coatings for container/equipment: Butyl Rubber, Natural Rubber, Ethylene-propylene-diene monomer (EPDM), Polystyrene, Polyethylene, Polyacrylonetrile.

7.3 Specific end use(s)

See attached exposure scenarios

SECTION 8: EXPOSURE CONTROLS/PERSONAL PROTECTION

8.1 Control parameters

National limit values

Occupational exposure limit values (Workplace Exposure Limits)

Country	Name of agent	CAS No	Identifier	TWA [ppm]	TWA [mg/m³]	STEL [ppm]	STEL [mg/m³]	Source
DE	1,2,4-trimethylbenzene	95-63-6	AGW	20	100	40	200	TRGS 900
EU	1,2,4-trimethylbenzene	95-63-6	IOELV	20	100			2017/164/EU
GB	aromatics	95-63-6	WEL		500			EH40/2005
IE	1,2,4-trimethylbenzene	95-63-6	OELV	20	100			S.I. No. 619 of 2001

Notation

STEL — Short-term exposure limit: a limit value above which exposure should not occur and which is related to a 15-minute period unless otherwise specified.

TWA — Time-weighted average (long-term exposure limit): measured or calculated in relation to a reference period of 8 hours time-weighted average.

Relevant DNELs/DMELs/PNECs and other threshold levels

• human health values

Endpoint	Threshold level	Protection goal, route of exposure	Used in	Exposure time
DNEL	100 mg/m³	human, inhalatory	worker (industry)	acute - local effects
DNEL	100 mg/m³	human, inhalatory	worker (industry)	acute - systemic effects
DNEL	100 mg/m³	human, inhalatory	worker (industry)	chronic - local effects
DNEL	16,171 mg/kg	human, dermal	worker (industry)	chronic - systemic effects
DNEL	100 mg/m³	human, inhalatory	worker (industry)	chronic - systemic effects
DNEL	29.4 mg/m³	human, inhalatory	consumer (private households)	acute - systemic effects
DNEL	29.4 mg/m³	human, inhalatory	consumer (private households)	chronic - local effects
DNEL	15 mg/kg	human, oral	consumer (private households)	chronic - systemic effects
DNEL	9,512 mg/kg	human, dermal	consumer (private households)	chronic - systemic effects
DNEL	29.4 mg/m³	human, inhalatory	consumer (private households)	chronic - systemic effects

• environmental values

End-point	Threshold level	Organism	Environmental compart-ment	Exposure time
PNEC	0.12 mg/l	aquatic organisms	freshwater	short-term (single instance)
PNEC	0.12 mg/l	aquatic organisms	marine water	short-term (single instance)
PNEC	2.41 mg/l	microorganisms	sewage treatment plant (STP)	short-term (single instance)
PNEC	13.56 mg/kg	benthic organisms	sediments	short-term (single instance)
PNEC	13.56 mg/kg	pelagic organisms	sediments	short-term (single instance)
PNEC	2.34 mg/kg	terrestrial organisms	so l	short-term (single instance)
PNEC	0.12 mg/l	aquatic organisms	water	intermittent release

8.2 Exposure controls

Appropriate engineering controls

Technical measures and the appliance of appropriate working methods take priority over the use of personal protective equipment.
Safety and necessary control measures vary according to exposure conditions. Appropriate measures are:
Open windows, door, to allow sufficient ventilation. If this is not possible employ a fan to increase air exchange (see attached exposure scenarios).

Individual protection measures (personal protective equipment)

Eye/face protection

Use safety goggle with side protection.

Skin protection

• hand protection

Wear suitable gloves. Chemical protection gloves are suitable, which are tested according to EN 374.
Short-term contact with the skin: Disposable gloves
Long-term contact with the skin: Gloves with long cuffs
Check leak-tightness/impermeability prior to use.

- **type of material**

NBR: acrylonitrile-butadiene rubber, FKM: fluoro-elastomer

- **material thickness**

0,40 mm.

- **breakthrough times of the glove material**

>480 minutes (permeation: level 6)

- **other protection measures**

Take recovery periods for skin regeneration. Preventive skin protection (barrier creams/ointments) is recommended. Wash hands thoroughly after handling.
Body protection:
Suitable protective clothing: Flame resistant clothing
Suitable safety shoes: Anti static safety shoes according to EN 345 S3

Respiratory protection

For activities in enclosed areas at elevated temperatures of the substance, local extraction or explosion protected ventilation equipment is recommended. In case this is not sufficient for the intended use, then apply a suitable respiratory protection according to EN 140 type A or better (see exposure scenarios). .

Environmental exposure controls

Do not empty into drains.

SECTION 9: PHYSICAL AND CHEMICAL PROPERTIES

9.1 Information on basic physical and chemical properties

Appearance	
Physical state	liquid
Colour	colourless
Odour	characteristic
Other physical and chemical parameters	
pH (value)	not determined
Melting point/freezing point	-43.77 °C
Initial boiling point and boiling range	169.4 °C at 101.3 kPa
Flash point	44 °C at 101.3 kPa
Explosive limits	
• lower explosion limit (LEL)	0.9 vol%
• upper explosion limit (UEL)	6.4 vol%
Vapour pressure	0.3 kPa at 25 °C
Density	0.88 $^{g}/_{cm^3}$ at 20 °C
Solubility(ies)	
Water solubility	57 $^{mg}/_{l}$ at 25 °C
Partition coefficient	
n-octanol/water (log KOW)	This information is not available.
Auto-ignition temperature	500 °C
Viscosity	
• kinematic viscosity	0.843 $^{mm^2}/_{s}$ at 20 °C

Explosive properties

in use, may form flammable/explosive vapour-air mixture

Oxidising properties none

9.2 Other information

SECTION 10: STABILITY AND REACTIVITY

10.1 Reactivity

risk of ignition

• if heated

risk of ignition

10.2 Chemical stability

The material is stable under normal ambient and anticipated storage and handling conditions of temperature and pressure (see below "Conditions to avoid").

10.3 Possibility of hazardous reactions

No known hazardous reactions.

10.4 Conditions to avoid

Keep away from heat, hot surfaces, sparks, open flames and other ignition sources. No smoking.

Hints to prevent fire or explosion

Use only non-sparking tools.

10.5 Incompatible materials

oxidisers

10.6 Hazardous decomposition products

No known hazardous decomposition products.

SECTION 11: TOXICOLOGICAL INFORMATION

11.1 Information on toxicological effects

Classification according to GHS (1272/2008/EC, CLP)

Acute toxicity

Harmful if inhaled.

• Acute toxicity estimate (ATE)

inhalation: vapour 11 $^{mg}/_{l}$/4h

Exposure route	Endpoint	Value	Species
oral	LD50	6,000 $^{mg}/_{kg}$	rat

Skin corrosion/irritation

Causes skin irritation.

Serious eye damage/eye irritation

Causes serious eye irritation.

Respiratory or skin sensitisation

Shall not be classified as a respiratory or skin sensitiser.

Summary of evaluation of the CMR properties

Shall not be classified as germ cell mutagenic, carcinogenic nor as a reproductive toxicant.

Specific target organ toxicity (STOT)

• Specific target organ toxicity - single exposure

May cause respiratory irritation.

• Specific target organ toxicity - repeated exposure

Shall not be classified as a specific target organ toxicant (repeated exposure).

Aspiration hazard

May be fatal if swallowed and enters airways.

Information on likely routes of exposure

If on skin. If inhaled.

SECTION 12: ECOLOGICAL INFORMATION

12.1 Toxicity

Aquatic toxicity (acute)

Endpoint	Value	Species	Exposure time
LC50	7.72 $^{mg}/_{l}$	fish	96 h
EC50	2.356 $^{mg}/_{l}$	algae	96 h

Aquatic toxicity (chronic)

May cause long-term adverse effects in the aquatic environment.

12.2 Persistence and degradability

Data are not available.

12.3 Bioaccumulative potential

Data are not available.

BCF 243

12.4 Mobility in soil

Data are not available.

12.5 Results of PBT and vPvB assessment

According to the results of its assessment, this substance is not a PBT or a vPvB.

12.6 Other adverse effects

Data are not available.

SECTION 13: DISPOSAL CONSIDERATIONS

13.1 Waste treatment methods

Waste treatment-relevant information

Solvent reclamation/regeneration.

Sewage disposal-relevant information

Do not empty into drains.

Waste treatment of containers/packagings

Empty containers may contain residue and can be dangerous. Do not attempt to refill or clean containers without proper instructions. Empty drums should be completely drained and safely stored until appropriately re-conditioned or disposed. Empty containers should be taken for recycling, recovery, or disposal through suitably qualified or licensed contractor and in accordance with governmental regulations. DO NOT PRESSURISE, CUT, WELD, BRAZE, SOLDER, DRILL, GRIND, OR EXPOSE SUCH CONTAINERS TO HEAT, FLAME, SPARKS, STATIC ELECTRICITY, OR OTHER SOURCES OF IGNITION. THEY MAY EXPLODE AND CAUSE INJURY OR DEATH.

List of wastes

Proposed waste code(s) for the used product:
07 01 04x Other organic solvents, washing liquids and mother liquors

Remarks

Please consider the relevant national or regional provisions. Waste shall be separated into the categories that can be handled separately by the local or national waste management facilities.

SECTION 14: TRANSPORT INFORMATION

14.1	UN number	**1993**
14.2	UN proper shipping name	**FLAMMABLE LIQUID, N.O.S.**
	Technical name	1,2,4-trimethylbenzene
14.3	Transport hazard class(es)	
	Class	3 (flammable liquids)
14.4	Packing group	III (substance presenting low danger)
14.5	Environmental hazards	hazardous to the aquatic environment

14.6 Special precautions for user

Provisions for dangerous goods (ADR) should be complied within the premises.

14.7 Transport in bulk according to Annex II of MARPOL and the IBC Code

The cargo is not intended to be carried in bulk.

Information for each of the UN Model Regulations

• Transport of dangerous goods by road, rail and inland waterway (ADR/RID/ADN)

UN number	1993
Proper shipping name	FLAMMABLE LIQUID, N.O.S.
Technical name (hazardous constituents)	1,2,4-trimethylbenzene
Class	3
Classification code	F1
Packing group	III
Danger label(s)	3 + "fish and tree"

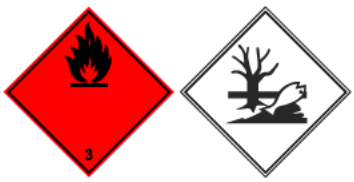

Environmental hazards	yes (hazardous to the aquatic environment)
Special provisions (SP)	274, 601
Excepted quantities (EQ)	E1
Limited quantities (LQ)	5 L
Transport category (TC)	3
Tunnel restriction code (TRC)	D/E
Hazard identification No	30
Emergency Action Code	3YE

• International Maritime Dangerous Goods Code (IMDG)

UN number	1993
Proper shipping name	FLAMMABLE LIQUID, N.O.S.
Particulars in the shipper's declaration	UN1993, FLAMMABLE LIQUID, N.O.S., (1,2,4-trimethylbenzene), 3, III, 44 °C c.c., MARINE POLLUTANT
Class	3

Marine pollutant	yes (hazardous to the aquatic environment)
Packing group	III
Danger label(s)	3 + "fish and tree"



Special provisions (SP)	223, 274, 955
Excepted quantities (EQ)	E1
Limited quantities (LQ)	5 L
EmS	F-E, S-E
Stowage category	A

• International Civil Aviation Organization (ICAO-IATA/DGR)

UN number	1993
Proper shipping name	Flammable liquid, n.o.s.
Class	3
Environmental hazards	yes (hazardous to the aquatic environment)
Packing group	III
Danger label(s)	3



Special provisions (SP)	A3
Excepted quantities (EQ)	E1
Limited quantities (LQ)	10 L

SECTION 15: REGULATORY INFORMATION

15.1 Safety, health and environmental regulations/legislation specific for the substance or mixture

Relevant provisions of the European Union (EU)

• Restrictions according to REACH, Annex XVII

Name of substance	CAS No	Wt%	Type of registration	No
1,2,4-trimethylbenzene		100	1907/2006/EC annex XVII	3
1,2,4-trimethylbenzene		100	1907/2006/EC annex XVII	40

• List of substances subject to authorisation (REACH, Annex XIV)

not listed

• 2012/18/EU (Seveso III)

No	Dangerous substance/hazard categories	Qualifying quantity (tonnes) for the application of lower and upper-tier requirements		Notes
E2	environmental hazards (hazardous to the aquatic environment, cat. 2)	200	500	57)

Notation

57) Hazardous to the Aquatic Environment in category Chronic 2.

• Limitation of emissions of volatile organic compounds due to the use of organic solvents in certain paints and varnishes and vehicle refinishing products (2004/42/EC, Deco-Paint Directive)

VOC content 100 %

• Directive on industrial emissions (VOCs, 2010/75/EU)

VOC content 100 %

• Directive 2011/65/EU on the restriction of the use of certain hazardous substances in electrical and electronic equipment (RoHS) - Annex II

not listed

• Regulation 166/2006/EC concerning the establishment of a European Pollutant Release and Transfer Register (PRTR)

not listed

• Directive 2000/60/EC establishing a framework for Community action in the field of water policy (WFD)

not listed

National inventories

Country	Inventory	Status
AU	AICS	substance is listed
CA	DSL	substance is listed
CN	IECSC	substance is listed
EU	ECSI	substance is listed
EU	REACH Reg.	substance is listed
JP	CSCL-ENCS	substance is listed
KR	KECI	substance is listed
MX	INSQ	substance is listed
NZ	NZIoC	substance is listed
PH	PICCS	substance is listed
TR	CICR	substance is listed
TW	TCSI	substance is listed
US	TSCA	substance is listed

Legend

AICS	Australian Inventory of Chemical Substances.
CICR	Chemical Inventory and Control Regulation.
CSCL-ENCS	List of Existing and New Chemical Substances (CSCL-ENCS).
DSL	Domestic Substances List (DSL).
ECSI	EC Substance Inventory (EINECS, ELINCS, NLP).
IECSC	Inventory of Existing Chemical Substances Produced or Imported in China.
INSQ	National Inventory of Chemical Substances.
KECI	Korea Existing Chemicals Inventory.
NZIoC	New Zealand Inventory of Chemicals.
PICCS	Philippine Inventory of Chemicals and Chemical Substances.
REACH Reg.	REACH registered substances.
TCSI	Taiwan Chemical Substance Inventory.
TSCA	Toxic Substance Control Act.

15.2 Chemical Safety Assessment

For this substance a chemical safety assessment has been carried out.

SECTION 16: OTHER INFORMATION

16.1 Indication of changes (revised safety data sheet)

Section	Former entry (text/value)	Actual entry (text/value)
1.3	Competent person responsible for the safety data sheet: Christian Knappe	Competent person responsible for the safety data sheet: Vanessa Manz
1.4		Poison centre: change in the listing (table)
2.2		Precautionary statements - prevention: change in the listing (table)
2.2		Precautionary statements - disposal: change in the listing (table)
6.2	Environmental precautions: Keep away from drains, surface and ground water. Retain contaminated washing water and dispose of it.	Environmental precautions: Keep away from drains, surface and ground water. Retain contaminated washing water and dispose of it. If substance has entered a water course or sewer, inform the responsible authority.
8.1		Occupational exposure limit values (Workplace Exposure Limits): change in the listing (table)
11.1		Information on l kely routes of exposure: If on skin. If inhaled.
15.1		• Restrictions according to REACH, Annex XVII: change in the listing (table)
15.1		National inventories: change in the listing (table)
16		Abbreviations and acronyms: change in the listing (table)
16	Key literature references and sources for data: - Regulation (EC) No. 1907/2006 (REACH), amended by 2015/830/EU - Regulation (EC) No. 1272/2008 (CLP, EU GHS) - See attached exposure scenarios http://www.dhc-solvent.de/dhc_sdbreach.html http://www.dhc-solvent.de/en/dhc_sdbreach.html Transport of dangerous goods by road, rail and inland waterway (ADR/RID/ADN). International Maritime Dangerous Goods Code (IMDG). International Air Transport Association (IATA).	Key literature references and sources for data: - Regulation (EC) No. 1907/2006 (REACH), amended by 2015/830/EU - Regulation (EC) No. 1272/2008 (CLP, EU GHS) - The exposure scenarios are available at www.dhc-solvent.de in the Service section. Transport of dangerous goods by road, rail and inland waterway (ADR/RID/ADN). International Maritime Dangerous Goods Code (IMDG). International Air Transport Association (IATA).
16		Disclaimer: This information is based upon the present state of our knowledge. This SDS has been compiled and is solely intended for this product. The information concerning legal regulations can lay no claim to completeness. In addition to this, other provisions may also apply to the product.

Abbreviations and acronyms

Abbr.	Descriptions of used abbreviations
2017/164/EU	Comission Directive establishing a fourth list of indicative occupational exposure limit values pursuant to Council Directive 98/24/EC, and amending Commission Directives 91/322/EEC, 2000/39/EC and 2009/161/EU
ADN	Accord européen relatif au transport international des marchandises dangereuses par voies de navigation intérieures (European Agreement concerning the International Carriage of Dangerous Goods by Inland Waterways)
ADR	Accord européen relatif au transport international des marchandises dangereuses par route (European Agreement concerning the International Carriage of Dangerous Goods by Road)
AGW	Workplace exposure limit

Abbr.	Descriptions of used abbreviations
BCF	Bioconcentration factor
CAS	Chemical Abstracts Service (service that maintains the most comprehensive list of chemical substances)
CLP	Regulation (EC) No 1272/2008 on classification, labelling and packaging of substances and mixtures
CMR	Carcinogenic, Mutagenic or toxic for Reproduction
DGR	Dangerous Goods Regulations (see IATA/DGR)
DMEL	Derived Minimal Effect Level
DNEL	Derived No-Effect Level
EH40/2005	EH40/2005 Workplace exposure limits (http://www.nationalarchives.gov.uk/doc/open-government-licence/)
EINECS	European Inventory of Existing Commercial Chemical Substances
ELINCS	European List of Notified Chemical Substances
EmS	Emergency Schedule
GHS	"Globally Harmonized System of Classification and Labelling of Chemicals" developed by the United Nations
IATA	International Air Transport Association
IATA/DGR	Dangerous Goods Regulations (DGR) for the air transport (IATA)
ICAO	International Civ l Aviation Organization
IMDG	International Maritime Dangerous Goods Code
index No	The Index number is the identification code given to the substance in Part 3 of Annex VI to Regulation (EC) No 1272/2008
IOELV	Indicative occupational exposure limit value
MARPOL	International Convention for the Prevention of Pollution from Ships (abbr. of "Marine Pollutant")
NLP	No-Longer Polymer
PBT	Persistent, Bioaccumulative and Toxic
PNEC	Predicted No-Effect Concentration
ppm	Parts per m llion
REACH	Registration, Evaluation, Authorisation and Restriction of Chemicals
RID	Règlement concernant le transport International ferroviaire des marchandises Dangereuses (Regulations concerning the International carriage of Dangerous goods by Rail)
S.I. No. 619 of 2001	Safety, Health and Welfare at Work (Chemical Agents) Regulations 2001
STEL	Short-term exposure limit
TRGS 900	Arbeitsplatzgrenzwerte (TRGS 900)
TWA	Time-weighted average
VOC	Volatile Organic Compounds
vPvB	Very Persistent and very Bioaccumulative
WEL	Workplace exposure limit

Key literature references and sources for data

- Regulation (EC) No. 1907/2006 (REACH), amended by 2015/830/EU
- Regulation (EC) No. 1272/2008 (CLP, EU GHS)
- The exposure scenarios are available at www.dhc-solvent.de in the Service section.

Transport of dangerous goods by road, rail and inland waterway (ADR/RID/ADN).
International Maritime Dangerous Goods Code (IMDG).
International Air Transport Association (IATA).

List of relevant phrases (code and full text as stated in chapter 2 and 3)

Code	Text
H226	Flammable liquid and vapour.
H304	May be fatal if swallowed and enters airways.
H315	Causes skin irritation.
H319	Causes serious eye irritation.
H332	Harmful if inhaled.
H335	May cause respiratory irritation.
H411	Toxic to aquatic life with long lasting effects.

Disclaimer

This information is based upon the present state of our knowledge. This SDS has been compiled and is solely intended for this product. The information concerning legal regulations can lay no claim to completeness. In addition to this, other provisions may also apply to the product.

Material Safety Data Sheet
Fluoranthene, 93%

MSDS# 01667

Section 1 - Chemical Product and Company Identification

MSDS Name:	Fluoranthene, 93%
Catalog Numbers:	AC345980000, AC345980010, AC345982500
Synonyms:	
Company Identification:	Acros Organics BVBA Janssen Pharmaceuticalaan 3a 2440 Geel, Belgium
Company Identification: (USA)	Acros Organics One Reagent Lane Fair Lawn, NJ 07410
For information in the US, call:	800-ACROS-01
For information in Europe, call:	+32 14 57 52 11
Emergency Number, Europe:	+32 14 57 52 99
Emergency Number US:	201-796-7100
CHEMTREC Phone Number, US:	800-424-9300
CHEMTREC Phone Number, Europe:	703-527-3887

Section 2 - Composition, Information on Ingredients

CAS#:	206-44-0
Chemical Name:	Fluoranthene
%:	93%
EINECS#:	205-912-4

Hazard Symbols: XN



Risk Phrases: 22

Section 3 - Hazards Identification

EMERGENCY OVERVIEW

Not available Target Organs: None known.

Potential Health Effects

Eye:	May cause eye irritation.
Skin:	May cause skin irritation.
Ingestion:	Harmful if swallowed. May cause irritation of the digestive tract.
Inhalation:	May cause respiratory tract irritation.
Chronic:	

Section 4 - First Aid Measures

Eyes:	Flush eyes with plenty of water for at least 15 minutes, occasionally lifting the upper and lower eyelids. Get medical aid.
Skin:	Get medical aid. Flush skin with plenty of water for at least 15 minutes while removing contaminated

clothing and shoes.

Ingestion: Get medical aid. Wash mouth out with water.

Inhalation: Remove from exposure and move to fresh air immediately. If not breathing, give artificial respiration. If breathing is difficult, give oxygen. Get medical aid.

Notes to Physician:

Section 5 - Fire Fighting Measures

General Information: As in any fire, wear a self-contained breathing apparatus in pressure-demand, MSHA/NIOSH (approved or equivalent), and full protective gear.

Extinguishing Media: In case of fire, use water, dry chemical, chemical foam, or alcohol-resistant foam.

Autoignition Temperature: Not available

Flash Point: > 100 deg C (> 212.00 deg F)

Explosion Limits: Lower: Not available

Explosion Limits: Upper: Not available

NFPA Rating: Not published

Section 6 - Accidental Release Measures

General Information: Use proper personal protective equipment as indicated in Section 8.

Spills/Leaks: Vacuum or sweep up material and place into a suitable disposal container.

Section 7 - Handling and Storage

Handling: Avoid breathing dust, mist, or vapor. Avoid contact with skin and eyes.

Storage: Store in a cool, dry place. Store in a tightly closed container.

Section 8 - Exposure Controls, Personal Protection

Chemical Name	ACGIH	NIOSH	OSHA - Final PELs
Fluoranthene	none listed	none listed	none listed

OSHA Vacated PELs: Fluoranthene: None listed

Engineering Controls:

Use adequate ventilation to keep airborne concentrations low.

Exposure Limits

Personal Protective Equipment

Eyes: Not available

Skin: Wear appropriate protective gloves and clothing to prevent skin exposure.

Clothing: Wear appropriate protective clothing to minimize contact with skin.

Respirators: Wear a NIOSH/MSHA or European Standard EN 149 approved full-facepiece airline respirator in the positive pressure mode with emergency escape provisions.

Section 9 - Physical and Chemical Properties

Physical State: Crystalline powder

Color: yellow

Odor: odorless

pH: Not available

Vapor Pressure: Not available

Vapor Density: Not available

Evaporation Rate: Not available

Viscosity: Not available

Boiling Point: 380 - 34.0 deg C @

Freezing/Melting Point: 109.00 - 111
Decomposition Temperature: Not available
Solubility in water: insoluble
Specific Gravity/Density:
Molecular Formula: C16H10
Molecular Weight: 202.07

Section 10 - Stability and Reactivity

Chemical Stability:	Stable under normal temperatures and pressures.
Conditions to Avoid:	Incompatible materials.
Incompatibilities with Other Materials	Not available
Hazardous Decomposition Products	Carbon monoxide, carbon dioxide.
Hazardous Polymerization	Has not been reported.

Section 11 - Toxicological Information

RTECS#: CAS# 206-44-0: LL4025000

LD50/LC50:
RTECS:
CAS# 206-44-0: Oral, rat: LD50 = 2 gm/kg;
Skin, rabbit: LD50 = 3180 mg/kg;
.

Carcinogenicity: Fluoranthene - IARC: Group 3 (not classifiable)

Other: The toxicological properties have not been fully investigated. See actual entry in RTECS for complete information.

Section 12 - Ecological Information

Other: No information available.

Section 13 - Disposal Considerations

Dispose of in a manner consistent with federal, state, and local regulations.

Section 14 - Transport Information

US DOT
Shipping Name: Please contact Fisher Scientific for shipping information
Hazard Class:
UN Number:
Packing Group:
Canada TDG
Shipping Name: Not available
Hazard Class:
UN Number:
Packing Group:

USA RQ: CAS# 206-44-0: 100 lb final RQ; 45.4 kg final RQ

Section 15 - Regulatory Information

European/International Regulations

European Labeling in Accordance with EC Directives

Hazard Symbols: XN

Risk Phrases:

R 22 Harmful if swallowed.

Safety Phrases:

WGK (Water Danger/Protection)

CAS# 206-44-0: Not available

Canada

CAS# 206-44-0 is listed on Canada's NDSL List

Canadian WHMIS Classifications: Not available

This product has been classified in accordance with the hazard criteria of the Controlled Products Regulations and the MSDS contains all of the information required by those regulations.

CAS# 206-44-0 is listed on Canada's Ingredient Disclosure List

US Federal

TSCA

CAS# 206-44-0 is listed on the TSCA Inventory.

Section 16 - Other Information

MSDS Creation Date: 10/27/1999

Revision #5 Date 7/20/2009

The information above is believed to be accurate and represents the best information currently available to us. However, we make no warranty of merchantibility or any other warranty, express or implied, with respect to such information, and we assume no liability resulting from its use. Users should make their own investigations to determine the suitability of the information for their particular purposes. In no event shall the company be liable for any claims, losses, or damages of any third party or for lost profits or any special, indirect, incidental, consequential, or exemplary damages howsoever arising, even if the company has been advised of the possibility of such damages.

Safety data sheet Safety data sheet

acc. to Regulation (EC) No. 1907/2006 (REACH)

m-Xylene ≥98,5 %, for synthesis

article number: **3791**
Version: **3.0 en**
Replaces version of: 2019-03-08
Version: (2)

date of compilation: 2016-06-29
Revision: 2022-06-29

SECTION 1: Identification of the substance/mixture and of the company/ undertaking

1.1 Product identifier

Identification of the substance	**m-Xylene** ≥98,5 %, for synthesis
Article number	3791
EC number	203-576-3
CAS number	108-38-3
Alternative name(s)	1,3-Dimethylbenzene

1.2 Relevant identified uses of the substance or mixture and uses advised against

Relevant identified uses:	Laboratory chemical Laboratory and analytical use
Uses advised against:	Do not use for products which come into contact with foodstuffs. Do not use for private purposes (household).

1.3 Details of the supplier of the safety data sheet

Carl Roth GmbH + Co KG
Schoemperlenstr. 3-5
D-76185 Karlsruhe
Germany

Telephone:+49 (0) 721 - 56 06 0
Telefax: +49 (0) 721 - 56 06 149
e-mail: sicherheit@carlroth.de
Website: www.carlroth.de

Competent person responsible for the safety data sheet:	:Department Health, Safety and Environment
e-mail (competent person):	**sicherheit@carlroth.de**

1.4 Emergency telephone number

Name	Street	Postal code/city	Telephone	Website
National Poisons Information Service City Hospital	Dudley Rd	B187QH Birmingham	844 892 0111	

SECTION 2: Hazards identification

2.1 Classification of the substance or mixture

Classification acc. to GHS

Section	Hazard class	Category	Hazard class and category	Hazard statement
2.6	Flammable liquid	3	Flam. Liq. 3	H226
3.1D	Acute toxicity (dermal)	4	Acute Tox. 4	H312
3.1I	Acute toxicity (inhal.)	4	Acute Tox. 4	H332
3.2	Skin corrosion/irritation	2	Skin Irrit. 2	H315
3.3	Serious eye damage/eye irritation	2	Eye Irrit. 2	H319
3.8R	Specific target organ toxicity - single exposure (respiratory tract irritation)	3	STOT SE 3	H335
3.9	Specific target organ toxicity - repeated exposure	2	STOT RE 2	H373
3.10	Aspiration hazard	1	Asp. Tox. 1	H304

For full text of abbreviations: see SECTION 16

The most important adverse physicochemical, human health and environmental effects

Delayed or immediate effects can be expected after short or long-term exposure. The product is combustible and can be ignited by potential ignition sources.

2.2 Label elements

Labelling

Signal word **Danger**

Pictograms

GHS02, GHS07, GHS08



Hazard statements

H226	Flammable liquid and vapour
H304	May be fatal if swallowed and enters airways
H312+H332	Harmful in contact with skin or if inhaled
H315	Causes skin irritation
H319	Causes serious eye irritation
H335	May cause respiratory irritation
H373	May cause damage to organs (respiratory system, nervous system) through prolonged or repeated exposure

Precautionary statements

Precautionary statements - prevention

P210	Keep away from heat, hot surfaces, sparks, open flames and other ignition sources. No smoking
P260	Do not breathe mist/vapours/spray
P280	Wear protective gloves/protective clothing/eye protection/face protection/hearing protection/...

Precautionary statements - response

P301+P310	IF SWALLOWED: Immediately call a POISON CENTER/doctor/...
P302+P352	IF ON SKIN: Wash with plenty of soap and water
P305+P351+P338	IF IN EYES: Rinse cautiously with water for several minutes. Remove contact lenses, if present and easy to do. Continue rinsing
P331	Do NOT induce vomiting

2.3 Other hazards

Results of PBT and vPvB assessment

According to the results of its assessment, this substance is not a PBT or a vPvB.

SECTION 3: Composition/information on ingredients

3.1 Substances

Name of substance	m-Xylene
Molecular formula	C_8H_{10}
Molar mass	106,2 $^{g}/_{mol}$
CAS No	108-38-3
EC No	203-576-3

Substance, Specific Conc. Limits, M-factors, ATE

Specific Conc. Limits	M-Factors	ATE	Exposure route
-	-	1.100 $^{mg}/_{kg}$ 11 $^{mg}/_{l}$/4h	dermal inhalation: vapour

SECTION 4: First aid measures

4.1 Description of first aid measures



General notes

Take off contaminated clothing.

Following inhalation

Provide fresh air. In all cases of doubt, or when symptoms persist, seek medical advice.

Following skin contact

Rinse skin with water/shower. In case of skin irritation, consult a physician.

Following eye contact

Irrigate copiously with clean, fresh water for at least 10 minutes, holding the eyelids apart. In case of eye irritation consult an ophthalmologist.

Following ingestion

Call a physician immediately. Observe aspiration hazard if vomiting occurs.

4.2 Most important symptoms and effects, both acute and delayed

Aspiration hazard, Irritation, Cough, Dyspnoea, Impairment of vision, Dizziness, Vertigo, Nausea, Vomiting, Diarrhoea, Breathing difficulties, Unconsciousness

4.3 Indication of any immediate medical attention and special treatment needed

none

SECTION 5: Firefighting measures

5.1 Extinguishing media



Suitable extinguishing media

co-ordinate firefighting measures to the fire surroundings
dry extinguishing powder, BC-powder, carbon dioxide (CO_2), alcohol resistant foam

Unsuitable extinguishing media

water jet

5.2 Special hazards arising from the substance or mixture

Combustible. In case of insufficient ventilation and/or in use, may form flammable/explosive vapour-air mixture. Solvent vapours are heavier than air and may spread along floors. Places which are not ventilated, e.g. unventilated below ground level areas such as trenches, conduits and shafts, are particularly prone to the presence of flammable substances or mixtures. Vapours are heavier than air, spread along floors and form explosive mixtures with air. Vapours may form explosive mixtures with air.

Hazardous combustion products

In case of fire may be liberated: Carbon monoxide (CO), Carbon dioxide (CO_2)

5.3 Advice for firefighters

In case of fire and/or explosion do not breathe fumes. Fight fire with normal precautions from a reasonable distance. Wear self-contained breathing apparatus.

SECTION 6: Accidental release measures

6.1 Personal precautions, protective equipment and emergency procedures



For non-emergency personnel

Avoid contact with skin, eyes and clothes. Do not breathe vapour/spray. Avoidance of ignition sources.

6.2 Environmental precautions

Keep away from drains, surface and ground water. Danger of explosion.

6.3 Methods and material for containment and cleaning up

Advice on how to contain a spill

Covering of drains.

Advice on how to clean up a spill

Absorb with liquid-binding material (sand, diatomaceous earth, acid- or universal binding agents).

Other information relating to spills and releases

Place in appropriate containers for disposal. Ventilate affected area.

6.4 Reference to other sections

Hazardous combustion products: see section 5. Personal protective equipment: see section 8. Incompatible materials: see section 10. Disposal considerations: see section 13.

SECTION 7: Handling and storage

7.1 Precautions for safe handling

Provision of sufficient ventilation.

Measures to prevent fire as well as aerosol and dust generation



Keep away from sources of ignition - No smoking.

Take precautionary measures against static discharge.

Advice on general occupational hygiene

Wash hands before breaks and after work. Keep away from food, drink and animal feedingstuffs. When using do not smoke.

7.2 Conditions for safe storage, including any incompatibilities

Keep container tightly closed.

Incompatible substances or mixtures

Observe hints for combined storage.

Consideration of other advice:

Ground/bond container and receiving equipment.

Ventilation requirements

Keep any substance that emits harmful vapours or gases in a place that allows these to be permanently extracted. Use local and general ventilation.

Specific designs for storage rooms or vessels

Recommended storage temperature: 15 – 25 °C

7.3 Specific end use(s)

No information available.

SECTION 8: Exposure controls/personal protection

8.1 Control parameters

National limit values

Occupational exposure limit values (Workplace Exposure Limits)

Country	Name of agent	CAS No	Identifier	TWA [ppm]	TWA [mg/m³]	STEL [ppm]	STEL [mg/m³]	Ceiling-C [ppm]	Ceiling-C [mg/m³]	Notation	Source
EU	m-xylene	108-38-3	IOELV	50	221	100	442			H	2000/39/EC
GB	m-xylene	108-38-3	WEL	50	220	100	441				EH40/2005

Notation

Ceiling-C	Ceiling value is a limit value above which exposure should not occur
H	Absorbed through the skin
STEL	Short-term exposure limit: a limit value above which exposure should not occur and which is related to a 15-minute period (unless otherwise specified)
TWA	Time-weighted average (long-term exposure limit): measured or calculated in relation to a reference period of 8 hours time-weighted average (unless otherwise specified)

Biological limit values

Country	Name of agent	CAS No	Parameter	Notation	Identifier	Value	Material	Source
GB	xylene, mixture of isomers	108-38-3	methylhippuric acids	crea	BMGV	650 mmol/mol	urine	EH40/2005

Notation

crea	Creatinine

Human health values

Relevant DNELs and other threshold levels

Endpoint	Threshold level	Protection goal, route of exposure	Used in	Exposure time
DNEL	221 mg/m³	human, inhalatory	worker (industry)	chronic - systemic effects
DNEL	442 mg/m³	human, inhalatory	worker (industry)	acute - systemic effects
DNEL	221 mg/m³	human, inhalatory	worker (industry)	chronic - local effects
DNEL	442 mg/m³	human, inhalatory	worker (industry)	acute - local effects
DNEL	212 mg/kg bw/day	human, dermal	worker (industry)	chronic - systemic effects

Environmental values

Relevant PNECs and other threshold levels				
End-point	Threshold level	Organism	Environmental compartment	Exposure time
PNEC	0,25 mg/l	aquatic organisms	water	intermittent release
PNEC	0,044 mg/l	aquatic organisms	freshwater	short-term (single instance)
PNEC	0,004 mg/l	aquatic organisms	marine water	short-term (single instance)
PNEC	1,6 mg/l	aquatic organisms	sewage treatment plant (STP)	short-term (single instance)
PNEC	2,52 mg/kg	aquatic organisms	freshwater sediment	short-term (single instance)
PNEC	0,252 mg/kg	aquatic organisms	marine sediment	short-term (single instance)
PNEC	0,852 mg/kg	terrestrial organisms	soil	short-term (single instance)

8.2 Exposure controls

Individual protection measures (personal protective equipment)

Eye/face protection



Use safety goggle with side protection.

Skin protection



• hand protection

Wear suitable gloves. Chemical protection gloves are suitable, which are tested according to EN 374. For special purposes, it is recommended to check the resistance to chemicals of the protective gloves mentioned above together with the supplier of these gloves. The times are approximate values from measurements at 22 ° C and permanent contact. Increased temperatures due to heated substances, body heat etc. and a reduction of the effective layer thickness by stretching can lead to a considerable reduction of the breakthrough time. If in doubt, contact manufacturer. At an approx. 1.5 times larger / smaller layer thickness, the respective breakthrough time is doubled / halved. The data apply only to the pure substance. When transferred to substance mixtures, they may only be considered as a guide.

• type of material

FKM (fluoro rubber)

• material thickness

0,4 mm

• breakthrough times of the glove material

>480 minutes (permeation: level 6)

• other protection measures

Take recovery periods for skin regeneration. Preventive skin protection (barrier creams/ointments) is recommended.

Respiratory protection



Respiratory protection necessary at: Aerosol or mist formation. Type: A (against organic gases and vapours with a boiling point of > 65 °C , colour code: Brown).

Environmental exposure controls

Keep away from drains, surface and ground water.

SECTION 9: Physical and chemical properties

9.1 Information on basic physical and chemical properties

Physical state	liquid
Colour	colourless
Odour	characteristic
Melting point/freezing point	-47,8 °C at 1.013 hPa (ECHA)
Boiling point or initial boiling point and boiling range	139,1 °C at 1.013 hPa (ECHA)
Flammability	flammable liquid in accordance with GHS criteria
Lower and upper explosion limit	1,1 vol% (LEL) - 7 vol% (UEL)
Flash point	27 °C at 1.013 hPa (ECHA)
Auto-ignition temperature	527 °C at 1.013 hPa (ECHA) (auto-ignition temperature (liquids and gases))
Decomposition temperature	not relevant
pH (value)	not determined
Kinematic viscosity	0,8837 $^{mm^2}/_{s}$ at 25 °C
Dynamic viscosity	0,76 mPa s at 25 °C
Solubility(ies)	
Water solubility	0,146 $^{g}/_{l}$ at 25 °C (poorly soluble) (ECHA)
Partition coefficient	
Partition coefficient n-octanol/water (log value):	3,2 (pH value: 7, 20 °C) (ECHA)
Soil organic carbon/water (log KOC)	2,73 (ECHA)
Vapour pressure	13,38 hPa at 32,2 °C
Density and/or relative density	
Density	0,86 $^{g}/_{cm^3}$ at 25 °C (ECHA)
Relative vapour density	3,66 (air = 1)

Particle characteristics	not relevant (liquid)
Other safety parameters	
Oxidising properties	none

9.2 Other information

Information with regard to physical hazard classes:	There is no additional information.
Other safety characteristics:	
Surface tension	29,76 $^{mN}/_{m}$ (25 °C) (ECHA)

SECTION 10: Stability and reactivity

10.1 Reactivity

It's a reactive substance. Risk of ignition.

If heated

Risk of ignition. Vapours may form explosive mixtures with air.

10.2 Chemical stability

The material is stable under normal ambient and anticipated storage and handling conditions of temperature and pressure.

10.3 Possibility of hazardous reactions

Violent reaction with: strong oxidiser, Acid, Sulphur, Sulphuric acid, Explosive properties, => Nitric acid

10.4 Conditions to avoid

Keep away from heat, hot surfaces, sparks, open flames and other ignition sources. No smoking.

10.5 Incompatible materials

Rubber articles

10.6 Hazardous decomposition products

Hazardous combustion products: see section 5.

SECTION 11: Toxicological information

11.1 Information on toxicological effects

Classification acc. to GHS

Acute toxicity

Harmful in contact with skin. Harmful if inhaled.

Acute toxicity

Exposure route	Endpoint	Value	Species	Method	Source
oral	LD50	3.523 $^{mg}/_{kg}$	rat		ECHA
dermal	LD50	12.126 $^{mg}/_{kg}$	rabbit		ECHA

Skin corrosion/irritation

Causes skin irritation.

Serious eye damage/eye irritation

Causes serious eye irritation.

Respiratory or skin sensitisation

Shall not be classified as a respiratory or skin sensitiser.

Germ cell mutagenicity

Shall not be classified as germ cell mutagenic.

Carcinogenicity

Shall not be classified as carcinogenic.

Reproductive toxicity

Shall not be classified as a reproductive toxicant.

Specific target organ toxicity - single exposure

May cause respiratory irritation.

Specific target organ toxicity - repeated exposure

May cause damage to organs (respiratory system, nervous system) through prolonged or repeated exposure.

Hazard category	Target organ	Exposure route
2	respiratory system	if exposed
2	nervous system	if exposed

Aspiration hazard

May be fatal if swallowed and enters airways.

Symptoms related to the physical, chemical and toxicological characteristics

• If swallowed

aspiration hazard

• If in eyes

Causes serious eye irritation

• If inhaled

Irritation to respiratory tract, cough, Dyspnoea

• If on skin

causes skin irritation

• Other information

Other adverse effects: Headache, Impairment of vision, Dizziness, Vertigo, Nausea, Cough, pain, choking, and breathing difficulties, Unconsciousness, Liver and kidney damage, Symptoms can occur only after several hours

11.2 Endocrine disrupting properties

Not listed.

11.3 Information on other hazards

There is no additional information.

SECTION 12: Ecological information

12.1 Toxicity

Shall not be classified as hazardous to the aquatic environment.

Aquatic toxicity (acute)				
Endpoint	**Value**	**Species**	**Source**	**Exposure time**
LC50	7,6 $^{mg}/_{l}$	fish	ECHA	96 h
LL50	5,549 $^{mg}/_{l}$	fish	ECHA	72 h
ErC50	4,7 $^{mg}/_{l}$	algae	ECHA	72 h
EC50	4,9 $^{mg}/_{l}$	algae	ECHA	72 h
EL50	5,744 $^{mg}/_{l}$	algae	ECHA	72 h

Aquatic toxicity (chronic)				
Endpoint	**Value**	**Species**	**Source**	**Exposure time**
EL50	2,9 $^{mg}/_{l}$	aquatic invertebrates	ECHA	21 d
ErC50	4,36 $^{mg}/_{l}$	algae	ECHA	73 h
EC50	2,2 $^{mg}/_{l}$	algae	ECHA	73 h

Biodegradation

The substance is readily biodegradable.

12.2 Process of degradability

Theoretical Oxygen Demand: 3,165 $^{mg}/_{mg}$
Theoretical Carbon Dioxide: 3,316 $^{mg}/_{mg}$

Process of degradability		
Process	**Degradation rate**	**Time**
oxygen depletion	94 %	28 d

12.3 Bioaccumulative potential

Does not significantly accumulate in organisms.

n-octanol/water (log KOW)	3,2 (pH value: 7, 20 °C) (ECHA)
BCF	>5,5 – <12,2 (ECHA)

12.4 Mobility in soil

Henry's law constant	623 $^{Pa\ m^3}/_{mol}$ at 25 °C (ECHA)
The Organic Carbon normalised adsorption coefficient	2,73 (ECHA)

12.5 Results of PBT and vPvB assessment

Data are not available.

12.6 Endocrine disrupting properties

Not listed.

12.7 Other adverse effects

Data are not available.

SECTION 13: Disposal considerations

13.1 Waste treatment methods



This material and its container must be disposed of as hazardous waste. Dispose of contents/container in accordance with local/regional/national/international regulations.

Sewage disposal-relevant information

Do not empty into drains.

Waste treatment of containers/packagings

It is a dangerous waste; only packagings which are approved (e.g. acc. to ADR) may be used.

13.2 Relevant provisions relating to waste

The allocation of waste identity numbers/waste descriptions must be carried out according to the EEC, specific to the industry and process. Waste catalogue ordinance (Germany).

13.3 Remarks

Waste shall be separated into the categories that can be handled separately by the local or national waste management facilities. Please consider the relevant national or regional provisions.

SECTION 14: Transport information

14.1 UN number or ID number

ADRRID	UN 1307
IMDG-Code	UN 1307
ICAO-TI	UN 1307

14.2 UN proper shipping name

ADRRID	XYLENES
IMDG-Code	XYLENES
ICAO-TI	Xylenes

14.3 Transport hazard class(es)

ADRRID	3

IMDG-Code	3
ICAO-TI	3

14.4 Packing group

ADRRID	III
IMDG-Code	III
ICAO-TI	III

14.5 Environmental hazards non-environmentally hazardous acc. to the dangerous goods regulations

14.6 Special precautions for user

Provisions for dangerous goods (ADR) should be complied within the premises.

14.7 Maritime transport in bulk according to IMO instruments

The cargo is not intended to be carried in bulk.

14.8 Information for each of the UN Model Regulations

Transport of dangerous goods by road, rail and inland waterway (ADR/RID/ADN) - Additional information

Proper shipping name	XYLENES
Particulars in the transport document	UN1307, XYLENES, 3, III, (D/E)
Classification code	F1
Danger label(s)	3



Excepted quantities (EQ)	E1
Limited quantities (LQ)	5 L
Transport category (TC)	3
Tunnel restriction code (TRC)	D/E
Hazard identification No	30
Emergency Action Code	3Y

Regulations concerning the International Carriage of Dangerous Goods by Rail (RID)Additional information

Classification code	F1
Danger label(s)	3



Excepted quantities (EQ)	E1
Limited quantities (LQ)	5 L
Transport category (TC)	3
Hazard identification No	30

International Maritime Dangerous Goods Code (IMDG) - Additional information

Proper shipping name	XYLENES
Particulars in the shipper's declaration	UN1307, XYLENES, 3, III, 27°C c.c.
Marine pollutant	-
Danger label(s)	3



Special provisions (SP)	223
Excepted quantities (EQ)	E1
Limited quantities (LQ)	5 L
EmS	F-E, S-D
Stowage category	A

International Civil Aviation Organization (ICAO-IATA/DGR) - Additional information

Proper shipping name	Xylenes
Particulars in the shipper's declaration	UN1307, Xylenes, 3, III
Danger label(s)	3



Special provisions (SP)	A3
Excepted quantities (EQ)	E1
Limited quantities (LQ)	10 L

SECTION 15: Regulatory information

15.1 Safety, health and environmental regulations/legislation specific for the substance or mixture

Relevant provisions of the European Union (EU)

Seveso Directive

2012/18/EU (Seveso III)				
No	**Dangerous substance/hazard categories**	**Qualifying quantity (tonnes) for the application of lower and upper-tier requirements**		**Notes**
P5c	flammable liquids (cat. 2, 3)	5.000	50.000	51)

Notation
51) Flammable liquids, categories 2 or 3 not covered by P5a and P5b

Deco-Paint Directive

VOC content	100 % 860 $^{g}/_{l}$

Industrial Emissions Directive (IED)

VOC content	100 %
VOC content	860 $^{g}/_{l}$

Directive on the restriction of the use of certain hazardous substances in electrical and electronic equipment (RoHS)

not listed

Regulation concerning the establishment of a European Pollutant Release and Transfer Register (PRTR)

not listed

Water Framework Directive (WFD)

not listed

Regulation on the marketing and use of explosives precursors

not listed

Regulation on drug precursors

not listed

Regulation on substances that deplete the ozone layer (ODS)

not listed

Regulation concerning the export and import of hazardous chemicals (PIC)

not listed

Regulation on persistent organic pollutants (POP)

not listed

National regulations(GB)

List of substances subject to authorisation (GB REACH, Annex 14) / SVHC - candidate list

not listed

Restrictions according to GB REACH, Annex 17

Dangerous substances with restrictions (GB REACH, Annex 17)			
Name of substance	**Name acc. to inventory**	**CAS No**	**No**
m-Xylene	this product meets the criteria for classification in accordance with Regulation No 1272/2008/EC		3
m-Xylene	flammable / pyrophoric		40

Other information

Directive 94/33/EC on the protection of young people at work. Observe employment restrictions under the Maternity Protection Directive (92/85/EEC) for expectant or nursing mothers.

National inventories

Country	Inventory	Status
AU	AIIC	substance is listed
CA	DSL	substance is listed
CN	IECSC	substance is listed
EU	ECSI	substance is listed
EU	REACH Reg.	substance is listed
JP	CSCL-ENCS	substance is listed
JP	ISHA-ENCS	substance is listed
KR	KECI	substance is listed
MX	INSQ	substance is listed
NZ	NZIoC	substance is listed
PH	PICCS	substance is listed
TW	TCSI	substance is listed
US	TSCA	substance is listed

Legend

AIIC	Australian Inventory of Industrial Chemicals
CSCL-ENCS	List of Existing and New Chemical Substances (CSCL-ENCS)
DSL	Domestic Substances List (DSL)
ECSI	EC Substance Inventory (EINECS, ELINCS, NLP)
IECSC	Inventory of Existing Chemical Substances Produced or Imported in China
INSQ	National Inventory of Chemical Substances
ISHA-ENCS	Inventory of Existing and New Chemical Substances (ISHA-ENCS)
KECI	Korea Existing Chemicals Inventory
NZIoC	New Zealand Inventory of Chemicals
PICCS	Philippine Inventory of Chemicals and Chemical Substances (PICCS)
REACH Reg.	REACH registered substances
TCSI	Taiwan Chemical Substance Inventory
TSCA	Toxic Substance Control Act

15.2 Chemical Safety Assessment

No Chemical Safety Assessment has been carried out for this substance.

SECTION 16: Other information

Indication of changes (revised safety data sheet)

Alignment to regulation:
Restructuring: section 9, section 14

Section	Former entry (text/value)	Actual entry (text/value)	Safety-relevant
2.1		Classification acc. to GHS: change in the listing (table)	yes
2.1		The most important adverse physicochemical, human health and environmental effects: Delayed or immediate effects can be expected after short or long-term exposure. The product is combustible and can be ignited by potential ignition sources.	yes
2.2		Precautionary statements - prevention: change in the listing (table)	yes

Section	Former entry (text/value)	Actual entry (text/value)	Safety-relevant
2.2	Labelling of packages where the contents do not exceed 125 ml: Signal word: Danger		yes
2.2		Labelling of packages where the contents do not exceed 125 ml: change in the listing (table)	yes
2.2		Labelling of packages where the contents do not exceed 125 ml: change in the listing (table)	yes
2.2		Labelling of packages where the contents do not exceed 125 ml: change in the listing (table)	yes
2.3	Other hazards: There is no additional information.	Other hazards	yes
2.3		Results of PBT and vPvB assessment: According to the results of its assessment, this substance is not a PBT or a vPvB.	yes

Abbreviations and acronyms

Abbr.	Descriptions of used abbreviations
2000/39/EC	Commission Directive establishing a first list of indicative occupational exposure limit values in implementation of Council Directive 98/24/EC
ADN	Accord européen relatif au transport international des marchandises dangereuses par voies de navigation intérieures (European Agreement concerning the International Carriage of Dangerous Goods by Inland Waterways)
ADR	Accord relatif au transport international des marchandises dangereuses par route (Agreement concerning the International Carriage of Dangerous Goods by Road)
ATE	Acute Toxicity Estimate
BCF	Bioconcentration factor
CAS	Chemical Abstracts Service (service that maintains the most comprehensive list of chemical substances)
Ceiling-C	Ceiling value
DGR	Dangerous Goods Regulations (see IATA/DGR)
DNEL	Derived No-Effect Level
EC50	Effective Concentration 50 %. The EC50 corresponds to the concentration of a tested substance causing 50 % changes in response (e.g. on growth) during a specified time interval
EC No	The EC Inventory (EINECS, ELINCS and the NLP-list) is the source for the seven-digit EC number, an identifier of substances commercially available within the EU (European Union)
EH40/2005	EH40/2005 Workplace exposure limits (http://www.nationalarchives.gov.uk/doc/open-government-licence/)
EINECS	European Inventory of Existing Commercial Chemical Substances
EL50	Effective Loading 50 %: the EL50 corresponds to the loading rate required to produce a response in 50% of the test organisms
ELINCS	European List of Notified Chemical Substances
EmS	Emergency Schedule

Abbr.	Descriptions of used abbreviations
ErC50	≡ EC50: in this method, that concentration of test substance which results in a 50 % reduction in either growth (EbC50) or growth rate (ErC50) relative to the control
GB REACH	The REACH etc. (Amendment etc.) (EU Exit) Regulations 2019, SI 2019/758 (as amended)
GHS	"Globally Harmonized System of Classification and Labelling of Chemicals" developed by the United Nations
IATA	International Air Transport Association
IATA/DGR	Dangerous Goods Regulations (DGR) for the air transport (IATA)
ICAO	International Civil Aviation Organization
ICAO-TI	Technical instructions for the safe transport of dangerous goods by air
IMDG	International Maritime Dangerous Goods Code
IMDG-Code	International Maritime Dangerous Goods Code
IOELV	Indicative occupational exposure limit value
LC50	Lethal Concentration 50%: the LC50 corresponds to the concentration of a tested substance causing 50 % lethality during a specified time interval
LD50	Lethal Dose 50 %: the LD50 corresponds to the dose of a tested substance causing 50 % lethality during a specified time interval
LEL	Lower explosion limit (LEL)
LL50	Lethal Loading 50 %: the LL50 corresponds to the loading rate causing 50 % lethality
NLP	No-Longer Polymer
PBT	Persistent, Bioaccumulative and Toxic
PNEC	Predicted No-Effect Concentration
ppm	Parts per million
REACH	Registration, Evaluation, Authorisation and Restriction of Chemicals
RID	Règlement concernant le transport International ferroviaire des marchandises Dangereuses (Regulations concerning the International carriage of Dangerous goods by Rail)
STEL	Short-term exposure limit
TWA	Time-weighted average
UEL	Upper explosion limit (UEL)
VOC	Volatile Organic Compounds
vPvB	Very Persistent and very Bioaccumulative
WEL	Workplace exposure limit

Key literature references and sources for data

Agreement concerning the International Carriage of Dangerous Goods by Road (ADR). Regulations concerning the International Carriage of Dangerous Goods by Rail (RID). International Maritime Dangerous Goods Code (IMDG). Dangerous Goods Regulations (DGR) for the air transport (IATA).

List of relevant phrases (code and full text as stated in section 2 and 3)

Code	Text
H226	Flammable liquid and vapour.
H304	May be fatal if swallowed and enters airways.
H312	Harmful in contact with skin.
H315	Causes skin irritation.
H319	Causes serious eye irritation.
H332	Harmful if inhaled.
H335	May cause respiratory irritation.
H373	May cause damage to organs (respiratory system, nervous system) through prolonged or repeated exposure.

Disclaimer

This information is based upon the present state of our knowledge. This SDS has been compiled and is solely intended for this product.

p-XYLENE CAS NO 106-42-3	MATERIAL SAFETY DATA SHEET SDS/MSDS

SECTION 1: Identification of the substance/mixture and of the company/undertaking

1.1 Product identifiers

Product name : p-Xylene

CAS-No. : 106-42-3

1.2 Relevant identified uses of the substance or mixture and uses advised against

Identified uses : Laboratory chemicals, Industrial & for professional use only.

1.3 Details of the supplier of the safety data sheet

Company : Central Drug House (P) Ltd
7/28 Vardaan House
New Delhi -110002
INDIA

Telephone : +91 11 49404040
Email : care@cdhfinechemical.com

1.4 Emergency telephone number

Emergency Phone # : +91 11 49404040 (9:00am - 6:00 pm) [Office hours]

SECTION 2: Hazards identification

2.1 Classification of the substance or mixture

Classification according to Regulation (EC) No 1272/2008
Flammable liquids (Category 3), H226
Acute toxicity, Inhalation (Category 4), H332
Acute toxicity, Dermal (Category 4), H312
Skin irritation (Category 2), H315

For the full text of the H-Statements mentioned in this Section, see Section 16.

2.2 Label elements

Labelling according Regulation (EC) No 1272/2008

Pictogram



Signal word Warning

Hazard statement(s)

H226	Flammable liquid and vapour.
H312 + H332	Harmful in contact with skin or if inhaled
H315	Causes skin irritation.

Precautionary statement(s)

P280	Wear protective gloves/ protective clothing.

Supplemental Hazard Statements	none

2.3 Other hazards

This substance/mixture contains no components considered to be either persistent, bioaccumulative and toxic (PBT), or very persistent and very bioaccumulative (vPvB) at levels of 0.1% or higher.

SECTION 3: Composition/information on ingredients

3.1 Substances

Synonyms	:	1,4-Dimethylbenzene
Formula	:	C_8H_{10}
Molecular weight	:	106.17 g/mol
CAS-No.	:	106-42-3
EC-No.	:	203-396-5
Index-No.	:	601-022-00-9

Hazardous ingredients according to Regulation (EC) No 1272/2008

Component		Classification	Concentration
p-Xylene			
CAS-No.	106-42-3	Flam. Liq. 3; Acute Tox. 4; Skin Irrit. 2; H226, H332, H312, H315	<= 100 %
EC-No.	203-396-5		
Index-No.	601-022-00-9		

For the full text of the H-Statements mentioned in this Section, see Section 16.

SECTION 4: First aid measures

4.1 Description of first aid measures

General advice

Consult a physician. Show this safety data sheet to the doctor in attendance.

If inhaled

If breathed in, move person into fresh air. If not breathing, give artificial respiration. Consult a physician.

In case of skin contact

Wash off with soap and plenty of water. Consult a physician.

In case of eye contact

Flush eyes with water as a precaution.

If swallowed

Do NOT induce vomiting. Never give anything by mouth to an unconscious person. Rinse mouth with water. Consult a physician.

4.2 Most important symptoms and effects, both acute and delayed

The most important known symptoms and effects are described in the labelling (see section 2.2) and/or in section 11

4.3 Indication of any immediate medical attention and special treatment needed

No data available

SECTION 5: Firefighting measures

5.1 Extinguishing media

Suitable extinguishing media

Use water spray, alcohol-resistant foam, dry chemical or carbon dioxide.

5.2 Special hazards arising from the substance or mixture

Carbon oxides

5.3 Advice for firefighters

Wear self-contained breathing apparatus for firefighting if necessary.

5.4 Further information
Use water spray to cool unopened containers.

SECTION 6: Accidental release measures

6.1 Personal precautions, protective equipment and emergency procedures
Use personal protective equipment. Avoid breathing vapours, mist or gas. Ensure adequate ventilation. Remove all sources of ignition. Beware of vapours accumulating to form explosive concentrations. Vapours can accumulate in low areas.
For personal protection see section 8.

6.2 Environmental precautions
Prevent further leakage or spillage if safe to do so. Do not let product enter drains. Discharge into the environment must be avoided.

6.3 Methods and materials for containment and cleaning up
Contain spillage, and then collect with an electrically protected vacuum cleaner or by wet-brushing and place in container for disposal according to local regulations (see section 13).

6.4 Reference to other sections
For disposal see section 13.

SECTION 7: Handling and storage

7.1 Precautions for safe handling
Avoid contact with skin and eyes. Avoid inhalation of vapour or mist.
Keep away from sources of ignition - No smoking.Take measures to prevent the build up of electrostatic charge.
For precautions see section 2.2.

7.2 Conditions for safe storage, including any incompatibilities
Store in cool place. Keep container tightly closed in a dry and well-ventilated place. Containers which are opened must be carefully resealed and kept upright to prevent leakage.
Storage class (TRGS 510): Flammable Liquids

7.3 Specific end use(s)
Apart from the uses mentioned in section 1.2 no other specific uses are stipulated

SECTION 8: Exposure controls/personal protection

8.1 Control parameters

8.2 Exposure controls

Appropriate engineering controls
Handle in accordance with good industrial hygiene and safety practice. Wash hands before breaks and at the end of workday.

Personal protective equipment

Eye/face protection
Face shield and safety glasses Use equipment for eye protection tested and approved under appropriate government standards such as NIOSH (US) or EN 166(EU).

Skin protection
Handle with gloves. Gloves must be inspected prior to use. Use proper glove removal technique (without touching glove’s outer surface) to avoid skin contact with this product. Dispose of contaminated gloves after use in accordance with applicable laws and good laboratory practices. Wash and dry hands.

Body Protection
Complete suit protecting against chemicals, Flame retardant antistatic protective clothing., The type of protective equipment must be selected according to the concentration and amount of the dangerous substance at the specific workplace.

Respiratory protection
Where risk assessment shows air-purifying respirators are appropriate use (US) or type ABEK (EN 14387) respirator cartridges as a backup to enginee protection, use a full-face supplied air respirator.

Use respirators and components tested and approved under appropriate government standards such as NIOSH (US) or CEN (EU).

Control of environmental exposure
Prevent further leakage or spillage if safe to do so. Do not let product enter drains. Discharge into the environment must be avoided.

SECTION 9: Physical and chemical properties

9.1 Information on basic physical and chemical properties

a)	Appearance	Form: liquid, clear Colour: colourless
b)	Odour	No data available
c)	Odour Threshold	No data available
d)	pH	No data available
e)	Melting point/freezing point	13.0 °C
f)	Initial boiling point and boiling range	137.0 - 138.0 °C
g)	Flash point	25.0 °C - closed cup
h)	Evaporation rate	No data available
i)	Flammability (solid, gas)	No data available
j)	Upper/lower flammability or explosive limits	Upper explosion limit: 7 %(V) Lower explosion limit: 1.1 %(V)
k)	Vapour pressure	16.0 mmHg at 37.7 °C 9.0 mmHg at 20.0 °C
l)	Vapour density	No data available
m)	Relative density	0.86 g/cm3
n)	Water solubility	0.2 g/l
o)	Partition coefficient: n-octanol/water	log Pow: 3.15
p)	Auto-ignition temperature	529.0 °C
q)	Decomposition temperature	No data available
r)	Viscosity	No data available
s)	Explosive properties	No data available
t)	Oxidizing properties	No data available

9.2 Other safety information

Surface tension	28.3 mN/m at 20.0 °C

SECTION 10: Stability and reactivity

10.1 Reactivity
No data available

10.2 Chemical stability
Stable under recommended storage conditions.

10.3 Possibility of hazardous reactions
No data available

10.4 Conditions to avoid
Heat, flames and sparks.

10.5 Incompatible materials
Strong oxidizing agents

10.6 Hazardous decomposition products
Hazardous decomposition products formed under fire conditions. - Carbon oxides
In the event of fire: see section 5

SECTION 11: Toxicological information

11.1 Information on toxicological effects

Acute toxicity
LD50 Oral - Rat - 5,000 mg/kg(p-Xylene)
LD50 Oral - Rat - male - 3,523 mg/kg(p-Xylene)
LC50 Inhalation - Rat - 4 h - 4550 ppm(p-Xylene)
Remarks: Lungs, Thorax, or Respiration:Chronic pulmonary edema. Liver:Other changes. Blood:Changes in cell count (unspecified).

Skin corrosion/irritation
Skin - Rabbit(p-Xylene)
Result: Moderate skin irritation - 4 h

Serious eye damage/eye irritation
No data available(p-Xylene)

Respiratory or skin sensitisation
No data available(p-Xylene)

Germ cell mutagenicity

No data available(p-Xylene)

Carcinogenicity

IARC: 3 - Group 3: Not classifiable as to its carcinogenicity to humans (p-Xylene)

Reproductive toxicity

May cause reproductive disorders.(p-Xylene)

Specific target organ toxicity - single exposure
No data available(p-Xylene)

Specific target organ toxicity - repeated exposure
No data available

Aspiration hazard
No data available(p-Xylene)

Additional Information
RTECS: ZE2625000

narcosis, Lung irritation, chest pain, pulmonary edema, Central nervous system depression, Gastrointestinal disturbance, Liver injury may occur., Kidney injury may occur., Blood disorders(p-Xylene)

SECTION 12: Ecological information

12.1 Toxicity

Toxicity to fish	LC50 - Oncorhynchus mykiss (rainbow trout) - 2.60 mg/l - 96 h(p-Xylene)
	LC50 - Carassius auratus (goldfish) - 18.00 mg/l - 24 h(p-Xylene)
Toxicity to daphnia and other aquatic invertebrates	EC50 - Daphnia magna (Water flea) - 35.50 - 63.10 mg/l - 48 h(p-Xylene)

Toxicity to algae	EC50 - Pseudokirchneriella subcapitata (green algae) - 3.20 - 4.40 mg/l - 72 h(p-Xylene)

12.2 Persistence and degradability

Biodegradability	Result: 87.8 % - Readily biodegradable

12.3 Bioaccumulative potential

No data available

12.4 Mobility in soil

No data available(p-Xylene)

12.5 Results of PBT and vPvB assessment

This substance/mixture contains no components considered to be either persistent, bioaccumulative and toxic (PBT), or very persistent and very bioaccumulative (vPvB) at levels of 0.1% or higher.

12.6 Other adverse effects

Toxic to aquatic life.

SECTION 13: Disposal considerations

13.1 Waste treatment methods

Product

Burn in a chemical incinerator equipped with an afterburner and scrubber b highly flammable. Offer surplus and non-recyclable solutions to a licensed disposal company.

Contaminated packaging

Dispose of as unused product.

SECTION 14: Transport information

14.1 UN number

ADR/RID: 1307	IMDG: 1307	IATA: 1307

14.2 UN proper shipping name

ADR/RID:	XYLENES
IMDG:	XYLENES
IATA:	Xylenes

14.3 Transport hazard class(es)

ADR/RID: 3	IMDG: 3	IATA: 3

14.4 Packaging group

ADR/RID: III	IMDG: III	IATA: III

14.5 Environmental hazards

ADR/RID: no	IMDG Marine pollutant: no	IATA: no

14.6 Special precautions for user

No data available

SECTION 15: Regulatory information

15.1 Safety, health and environmental regulations/legislation specific for the substance or mixture

This safety datasheet complies with the requirements of Regulation (EC) No. 1907/2006.

15.2 Chemical safety assessment

For this product a chemical safety assessment was not carried out

SECTION 16: Other information

Full text of H-Statements referred to under sections 2 and 3.

H226	Flammable liquid and vapour.
H312	Harmful in contact with skin.
H312 + H332	Harmful in contact with skin or if inhaled

H315	Causes skin irritation.
H332	Harmful if inhaled.

Further information

The above information is believed to be correct but does not purport to be all inclusive and shall be used only as a guide. The information in this document is based on the present state of our knowledge and is applicable to the product with regard to appropriate safety precautions. It does not represent any guarantee of the properties of the product. Central Drug House (P) Ltd and its Affiliates shall not be held liable for any damage resulting from handling or from contact with the above product. See www.cdhfinechemical.com for additional terms and conditions of sale.

Material Safety Data Sheet

Issuing Date 06/04/10 **Revision Number** 0

1. PRODUCT AND COMPANY IDENTIFICATION

Product Name **Phenol, Saturated Solution**

Product Code(s) 0945

UN-No 2821

Distributor
AMRESCO INC.
6681 Cochran Road
SOLON, OHIO 44139

Company Phone Number 1-800-829-2805
Emergency Telephone Number Chemtrec 1-800-424-9300

2. HAZARDS IDENTIFICATION

Emergency Overview

Highly toxic
Corrosive
Combustible

Appearance Clear, Two-Layer **Physical State** Liquid **Odor** Phenolic, Medicinal

Potential Health Effects

Acute Toxicity

Eyes Corrosive.
Skin Very toxic in contact with skin. Corrosive, causes burns. readily absorbed through skin.
Inhalation Very toxic by inhalation. corrosive ,causes burns.
Ingestion Very toxic if swallowed. Corrosive, causes burns.

Chronic Effects No known effect based on information supplied.

Aggravated Medical Conditions None known.

Environmental Hazard See Section 12 for additional Ecological Information.

3. COMPOSITION/INFORMATION ON INGREDIENTS

Chemical Name	CAS-No	Weight %
Phenol	108-95-2	95-100

4. FIRST AID MEASURES

Eye Contact Rinse thoroughly with plenty of water for at least 15 minutes and consult a physician.

Skin Contact Wash skin with soap and water.

Inhalation Move to fresh air. If breathing becomes difficult, give oxygen.

Ingestion Clean mouth with water and afterwards drink plenty of water.

Notes to Physician Treat symptomatically.

5. FIRE-FIGHTING MEASURES

Flammable Properties combustible liquid.

Flash Point Not determined

Suitable Extinguishing Media Dry chemical, CO2, water spray or regular foam.

Hazardous Combustion Products Carbon oxides

Explosion Data

Sensitivity to Mechanical Impact Not sensitive.

Sensitivity to Static Discharge Not sensitive.

Protective Equipment and Precautions for Firefighters As in any fire, wear self-contained breathing apparatus pressure-demand, MSHA/NIOSH (approved or equivalent) and full protective gear.

NFPA **Health Hazard** - **Flammability** - **Stability** - **Physical and Chemical Hazards** -

6. ACCIDENTAL RELEASE MEASURES

Personal Precautions Avoid contact with skin, eyes and clothing. Use personal protective equipment. Ensure adequate ventilation
.

Methods for Containment Prevent further leakage or spillage if safe to do so.

Methods for Cleaning Up Cover with dry lime or soda ash. Pick up and transfer to properly labeled containers. Ventilate area and wash spill site after material pickup is complete.

7. HANDLING AND STORAGE

Handling Handle in accordance with good industrial hygiene and safety practice. Light Sensitive.

Storage Keep containers tightly closed in a dry, cool and well-ventilated place. Protect from light.

8. EXPOSURE CONTROLS / PERSONAL PROTECTION

Chemical Name	ACGIH TLV	OSHA PEL	NIOSH IDLH
Phenol 108-95-2	TWA: 5 ppm	TWA: 19 mg/m^3 TWA: 5 ppm (vacated) TWA: 19 mg/m^3 (vacated) TWA: 5 ppm Skin	IDLH: 250 ppm Ceiling: 15.6 ppm Ceiling: 60 mg/m^3 TWA: 19 mg/m^3 TWA: 5 ppm

Engineering Measures Showers
Eyewash stations
Ventilation systems.

Personal Protective Equipment

Eye/Face Protection Tightly fitting safety goggles.

Skin and Body Protection Wear protective gloves/clothing.

Respiratory Protection If exposure limits are exceeded or irritation is experienced, NIOSH/MSHA approved respiratory protection should be worn. Positive-pressure supplied air respirators may be required for high airborne contaminant concentrations. Respiratory protection must be provided in accordance with current local regulations.

Hygiene Measures Handle in accordance with good industrial hygiene and safety practice.

9. PHYSICAL AND CHEMICAL PROPERTIES

Appearance	Clear Two-Layer	**Odor**	Phenolic, Medicinal
Physical State	Liquid		
Flash Point	No information available	**Autoignition Temperature**	No information available
Boiling Point/Range	No information available	**Flammability Limits in Air**	No information available
Explosion Limits	No information available		
Solubility	No information available	**Evaporation Rate**	No information available
Vapor Density	No information available.		

10. STABILITY AND REACTIVITY

Stability Stable under recommended storage conditions.

Incompatible Products Strong oxidizing agents. Strong acids. Strong bases.

Conditions to Avoid Protect from light.

Hazardous Decomposition Products Carbon oxides.

Hazardous Polymerization Hazardous polymerization does not occur.

11. TOXICOLOGICAL INFORMATION

Acute Toxicity

Product Information Very toxic by inhalation, in contact with skin, or if swallowed. Corrosive, causes burns.

Chemical Name	LD50 Oral	LD50 Dermal	LC50 Inhalation
Phenol	317 mg/kg (Rat)	525 mg/kg (Rat) 630 mg/kg (Rabbit)	316 mg/m^3(Rat) 4 h

Chronic Toxicity

Target Organ Effects Kidney, Liver, Central nervous system (CNS)

12. ECOLOGICAL INFORMATION

Ecotoxicity

Harmful to aquatic organisms.

Chemical Name	Toxicity to Algae	Toxicity to Fish	Microtox	Daphnia Magna (Water Flea)
Phenol	EC50 = 150 mg/L 96 h	LC50 5 - 12 mg/L Oncorhynchus mykiss 96 h LC50= 23.88 mg/L Lepomis macrochirus 96 h LC50= 24 mg/L Pimephales promelas 96 h LC50= 27.8 mg/L Brachydanio rerio 96 h LC50= 40 mg/L Poecilia reticulata 96 h LC50= 8.9 mg/L Oncorhynchus mykiss 96 h	EC50 21 - 36 mg/L 30 min EC50 = 23.28 mg/L 5 min EC50 = 25.61 mg/L 15 min EC50 = 28.8 mg/L 5 min EC50 = 31.6 mg/L 15 min	LC50 = 13 mg/L 48 h EC50 = 23.0 mg/L 48 h

Chemical Name	Log Pow
Phenol	= 1.47

13. DISPOSAL CONSIDERATIONS

Waste Disposal Method Dispose of material in accordance with all federal, state, and local regulations.

Contaminated Packaging Dispose of in accordance with all federal, state and local regulations.

Chemical Name
Phenol - 108-95-2

Chemical Name	RCRA - Halogenated Organic Compounds	RCRA - P Series Wastes	RCRA - F Series Wastes	RCRA - K Series Wastes	RCRA - U Series Wastes
Phenol - 108-95-2					U188

Chemical Name	California Hazardous Waste Status
Phenol	Toxic; Corrosive

14. TRANSPORT INFORMATION

DOT

Proper Shipping Name PHENOL SOLUTION
Hazard Class 6.1
UN-No 2821
Packing Group II

IATA

UN-No 2821
Proper Shipping Name PHENOL SOLUTION
Hazard Class 6.1
Packing Group II

15. REGULATORY INFORMATION

International Inventories

TSCA Complies
DSL Complies
EINECS/ELINCS Complies

ENCS	Complies
IECSC	Complies
KECL	Complies
PICCS	Complies
AICS	Complies

U.S. Federal Regulations

SARA 313
Section 313 of Title III of the Superfund Amendments and Reauthorization Act of 1986 (SARA). This product contains a chemical or chemicals which are subject to the reporting requirements of the Act and Title 40 of the Code of Federal Regulations, Part 372:

Chemical Name	CAS-No	Weight %	SARA 313 - Threshold Values %
Phenol	108-95-2	95-100	1.0

SARA 311/312 Hazard Categories

Acute Health Hazard	Yes
Chronic Health Hazard	No
Fire Hazard	Yes
Sudden Release of Pressure Hazard	No
Reactive Hazard	No

Clean Water Act
This product contains the following substances which are regulated pollutants pursuant to the Clean Water Act (40 CFR 122.21 and 40 CFR 122.42).

Component	CWA - Reportable Quantities	CWA - Toxic Pollutants	CWA - Priority Pollutants	CWA - Hazardous Substances
Phenol 108-95-2 (95-100)	1000 lb	X	X	X

Clean Air Act, Section 112 Hazardous Air Pollutants (HAPs) (see 40 CFR 61)
This product contains the following substances which are listed hazardous air pollutants (HAPS) under Section 112 of the Clean Air Act:.

Chemical Name	CAS-No	Weight %	HAPS data	VOC Chemicals	Class 1 Ozone Depletors	Class 2 Ozone Depletors
Phenol	108-95-2	95-100	Present	Group III		

CERCLA

Chemical Name	Hazardous Substances RQs	Extremely Hazardous Substances RQs
Phenol	1000 b	1000 lb

U.S. State Regulations

California Proposition 65
This product does not contain any Proposition 65 chemicals.

Chemical Name	Massachusetts	New Jersey	Pennsylvania	Illinois	Rhode Island
Phenol	X	X	X	X	X

International Regulations

Mexico - Grade -

Chemical Name	Carcinogen Status	Exposure Limits
Phenol		Mexico: TWA= 19 mg/m^3 Mexico: TWA= 5 ppm Mexico: STEL= 38 mg/m^3 Mexico: STEL= 10 ppm

Canada

WHMIS Hazard Class
Not determined

Chemical Name	NPRI
Phenol	X

16. OTHER INFORMATION

Issuing Date 06/04/10

Revision Date

Revision Note No information available.

Disclaimer
The information provided on this MSDS is correct to the best of our knowledge, information and belief at the date of its publication. The information given is designed only as a guide for safe handling, use, processing, storage, transportation, disposal and release and is not to be considered as a warranty or quality specification. The information relates only to the specific material designated and may not be valid for such material used in combination with any other material or in any process, unless specified in the text.

End of MSDS

SAFETY DATA SHEET
Klean-Strip Acetone

Printed: 04/15/2015
Revision: 04/15/2015
Supersedes Revision: 03/26/2015

1. PRODUCT AND COMPANY IDENTIFICATION

Product Name: Klean-Strip Acetone

Company Name: W. M. Barr
2105 Channel Avenue
Memphis, TN 38113

Phone Number: (901)775-0100

Web site address: www.wmbarr.com

Emergency Contact: 3E 24 Hour Emergency Contact (800)451-8346
Information: W.M. Barr Customer Service (800)398-3892

Intended Use: Paint, stain, and varnish thinning.

Synonyms: CAC18, DAC18, GAC18, GAC182, QAC18, QAC18KM, QAC184, PA12270

Additional Information This product is regulated by the United States Consumer Product Safety Commission and is subject to certain labeling requirements under the Federal Hazardous Substances Act. These requirements differ from the classification criteria and hazard information required for safety data sheets (SDS). The product label also includes other important information, including directions for use, and should always be read in its entirety prior to using the product.

2. HAZARDS IDENTIFICATION

Flammable Liquids, Category 2
Serious Eye Damage/Eye Irritation, Category 2
Specific Target Organ Toxicity (single exposure), Category 3



GHS Signal Word: **Danger**

GHS Hazard Phrases:
H225: Highly flammable liquid and vapor.
H319: Causes serious eye irritation.
H335: May cause respiratory irritation.
H336: May cause drowsiness or dizziness.

GHS Precaution Phrases:
P233: Keep container tightly closed.
P210: Keep away from heat/sparks/open flames/hot surfaces. - No smoking.
P280: Wear protective gloves/protective clothing/eye protection/face protection.
P240: Ground/bond container and receiving equipment.
P241: Use explosion-proof electrical/ventilating/lighting equipment.
P243: Take precautionary measures against static discharge.
P242: Use only non-sparking tools.
P264: Wash hands thoroughly after handling.
P261: Avoid breathing gas/mist/vapours/spray.
P271: Use only outdoors or in a well-ventilated area.

GHS Response Phrases:
P370+378: In case of fire, use dry chemical to extinguish.
P303+361+353: IF ON SKIN (or hair): Remove/take off immediately all contaminated clothing. Rinse skin with water/shower.
P305+351+338: IF IN EYES: Rinse cautiously with water for several minutes. Remove contact lenses, if present and easy to do. Continue rinsing.
P337+313: If eye irritation persists, get medical advice/attention.
P304+340: IF INHALED: Remove victim to fresh air and keep at rest in a position comfortable for breathing.
P312: Call a POISON CENTER/doctor if you feel unwell.

GHS Storage and Disposal P403+235: Store in cool/well-ventilated place.

Phrases: P501: Dispose of contents/container according to local, state and federal regulations.
P403+233: Store container tightly closed in well-ventilated place - if product is as volatile as to generate hazardous atmosphere.
P405: Store locked up.

Hazard Rating System:

HMIS:

HEALTH	*	2
FLAMMABILITY		3
PHYSICAL		0
PPE		X

NFPA:

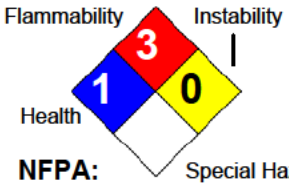

OSHA Regulatory Status: This material is classified as hazardous under OSHA regulations.

Potential Health Effects (Acute and Chronic):

Inhalation Acute Exposure Effects:
Vapor harmful. May cause dizziness, headache, watering of eyes, irritation of respiratory tract, drowsiness, nausea, and numbness in fingers, arms and legs. Inhalation of high vapor concentrations can cause central nervous system depression and narcosis. May lead to unconsciousness.

Skin Contact Acute Exposure Effects:
May cause skin irritation. Liquid is absorbed readily and can transport other toxins into the body. Prolonged or repeated skin contact with liquid may cause defatting resulting in drying, redness and possible blistering.

Eye Contact Acute Exposure Effects:
This material is an eye irritant. Causes itching, burning, redness and tearing. May cause corneal injury.

Ingestion Acute Exposure Effects:
Harmful if swallowed. Aspiration hazard if swallowed - can enter lungs and cause damage. May cause irritation of the gastrointestinal tract. May cause systemic poisoning with symptoms paralleling those of inhalation.

Chronic Exposure Effects:
Reports have associated repeated and prolonged overexposure to solvents with neurological and other physiological damage. May cause weakness, fatigue, skin irritation, and numbness in hands and feet.

May cause target organ or system damage to the respiratory system, nervous system, kidney, blood system, and liver.

Target Organs:
Eyes, skin, respiratory system, central nervous system, heart

Medical Conditions Generally Aggravated By Exposure: Skin, eye, respiratory and asthma, cardiac irregularities

3. COMPOSITION/INFORMATION ON INGREDIENTS

CAS #	Hazardous Components (Chemical Name)	Concentration	RTECS #
67-64-1	Acetone {2-Propanone}	100.0 %	AL3150000

4. FIRST AID MEASURES

Emergency and First Aid Procedures:

Skin:
Immediately begin washing the skin thoroughly with large amounts of water and mild soap, if available, while removing contaminated clothing. Seek medical attention if irritation persists.

Eyes:
Immediately begin to flush eyes with water, remove any contact lens. Continue to flush the eyes for at least 15 minutes, then seek immediate medical attention.

Inhalation:
Remove to fresh air. If not breathing, give artificial respiration. If breathing is difficult, give oxygen. Get immediate medical attention.

Ingestion:
If swallowed, do NOT induce vomiting. Seek immediate medical attention. Call a physician, hospital emergency room, or poison control center immediately. Never give anything by mouth to an unconscious person.

Signs and Symptoms Of Exposure:

Primary Routes of Exposure:
Inhalation, ingestion, and dermal.

Note to Physician: Treatment of overexposure should be directed at the control of symptoms and the clinical condition of the patient.

5. FIRE FIGHTING MEASURES

Class IB

Flash Pt: 0.00 F Method Used: TAG Closed Cup

Explosive Limits: LEL: 2.5 % at 77.0 F UEL: 13.0 % at 77.0 F

Autoignition Pt: 869.00 F

Suitable Extinguishing Media: Use carbon dioxide, dry powder, or alcohol-resistant foam.

Fire Fighting Instructions: Self-contained respiratory protection should be provided for fire fighters fighting fires in buildings or confined areas. Storage containers exposed to fire should be kept cool with water spray to prevent pressure build-up. Stay away from heads of containers that have been exposed to intense heat or flame.

Flammable Properties and Hazards: Extremely Flammable! Vapors are heavier than air and may spread along floors. Forms or accumulates static electricity, may cause fire or explosion.

Acetone/water solutions that contain more than 2.5% acetone have flash points. When the acetone concentration is greater than 8% by weight in a closed container, it would be within the flammable range and cause fire or explosion if a source of ignition were introduced.

Do not spread this product over a large surface area because the fire and health safety risks will increase dramatically.

6. ACCIDENTAL RELEASE MEASURES

Steps To Be Taken In Case Material Is Released Or Spilled:

Vapors may cause flash fire or ignite explosively.

Clean up: Keep unnecessary people away; isolate hazard area and deny entry. Stay upwind, out of low areas, and ventilate closed spaces before entering. Shut off ignition sources; keep flares, smoking or flames out of hazard area. Use non-sparking tools. Use proper bonding and grounding methods for all equipment and processes. Keep out of waterways and bodies of water. Be cautious of vapors collecting in small enclosed spaces, sewers, low lying areas, confined spaces, etc.

Small spills: Take up with sand, earth or other noncombustible absorbent material and place in a plastic container where applicable.

Large spills: Dike far ahead of spill for later disposal.

Waste Disposal: Dispose in accordance with applicable local, state and federal regulations.

7. HANDLING AND STORAGE

Precautions To Be Taken in Handling:

Read carefully all cautions and directions on product label before use. Since empty container retains residue, follow all label warnings even after container is empty. Dispose of empty container according to all regulations. Do not reuse this container.

Do not use this product near any source of heat or open flame, furnace areas, pilot lights, stoves, etc.

Do not use in small enclosed spaces, such as basements and bathrooms. Vapors can accumulate and explode if ignited.

Do not spread this product over large surface areas because fire and health safety risks will increase dramatically.

Precautions To Be Taken in Storing:

Keep container tightly closed when not in use. Store in a cool, dry place. Do not store near any source of heat or flame, furnace areas, pilot lights, stoves, etc. Do not reuse this container. Use product within one year of purchasing.

8. EXPOSURE CONTROLS/PERSONAL PROTECTION

CAS #	Partial Chemical Name	OSHA TWA	ACGIH TWA	Other Limits
67-64-1	Acetone {2-Propanone}	PEL: 1000 ppm	TLV: 500 ppm STEL: 750 ppm	No data.

Respiratory Equipment (Specify Type):

For use in areas with inadequate ventilation or fresh air, wear a properly maintained and properly fitted NIOSH approved respirator for organic solvent vapors.

For OSHA controlled work places and other regular users - Use only with adequate ventilation under engineered air control systems designed to prevent exceeding the appropriate TLV.

A dust mask does not provide protection against vapors.

Eye Protection:

Splash goggles.

Protective Gloves:	Wear gloves with as much resistance to the chemical ingredients as possible. Glove materials such as nitrile rubber, natural rubber, and neoprene may provide protection. Glove selection should be based on chemicals being used and conditions of use. Consult your glove supplier for additional information. Gloves contaminated with product should be discarded and not reused.
Other Protective Clothing:	Various application methods can dictate use of additional protective safety equipment, such as impermeable aprons, etc., to minimize exposure.
Engineering Controls (Ventilation etc.):	Use process enclosures, local exhaust ventilation, or other engineering controls to control airborne levels below recommended exposure limits. Use only with adequate ventilation to prevent buildup of vapors. Do not use in areas where vapors can accumulate and concentrate, such as basements, bathrooms or small enclosed areas. Whenever possible, use outdoors in an open air area. If using indoors open all windows and doors and maintain a cross ventilation of moving fresh air across the work area. If strong odor is noticed or you experience slight dizziness, headache, nausea or eye-watering -- STOP -- ventilation is inadequate. Leave area immediately and move to fresh air.
Work/Hygienic/Maintenance Practices:	Wash hands thoroughly after use and before eating, drinking, smoking, or using the restroom. Do not eat, drink, or smoke in the work area. Discard any clothing or other protective equipment that cannot be decontaminated. Facilities storing or handling this material should be equipped with an emergency eyewash and safety shower.

9. PHYSICAL AND CHEMICAL PROPERTIES

Physical States:	[ ] Gas [X] Liquid [ ] Solid
Appearance and Odor:	Clear colorless liquid with a characteristic ketone odor. Odor may be described as a sweet pungent odor.
Melting Point:	No data.
Boiling Point:	> 133.00 F
Autoignition Pt:	869.00 F
Flash Pt:	0.00 F Method Used: TAG Closed Cup
Explosive Limits:	LEL: 2.5 % at 77.0 F UEL: 13.0 % at 77.0 F
Specific Gravity (Water = 1):	0.789
Density:	6.572 LB/GA at 77.0 F
Vapor Pressure (vs. Air or mm Hg):	213 MM HG at 77.0 F
Vapor Density (vs. Air = 1):	No data.
Evaporation Rate:	No data.
Solubility in Water:	Complete

Percent Volatile: 100.0 % by weight.

10. STABILITY AND REACTIVITY

Stability: Unstable [ ] Stable [X]

Conditions To Avoid - Instability: No data available.

Incompatibility - Materials To Avoid: Avoid contact with acids, aldehydes, alkalies, amines, ammonia, oxidizing agents, reducing agents, chlorine compounds.

May form explosive mixtures with chromic anhydride, chromyl alcohol, hexachloromelamine, hydrogen peroxide, permonosulfuric acid, potassium tertbutoxide, and thioglycol. Strong oxidizers.

Hazardous Decomposition Or Byproducts: Decomposition may produce carbon monoxide, carbon dioxide, and other asphyxiants.

Possibility of Hazardous Reactions: Will occur [ ] Will not occur [X]

Conditions To Avoid - Hazardous Reactions: No data available.

11. TOXICOLOGICAL INFORMATION

Toxicological Information: NEUROTOXICITY: Clinical studies and case reports suggest slight neurological effects, mostly of the subjective type, in individuals exposed to varying concentrations of acetone. In most studies the subjects report discomfort, irritation of the eyes and respiratory passages, mood swings, and nausea following exposure to acetone vapor at concentrations of 500 ppm or higher. The fact that the effects subside following termination of exposure indicates that acetone may be the active compound, rather than a metabolite. Case reports of accidental poisoning also indicate that the effects (e.g., lethargy and drowsiness) are short-lived.

Carcinogenicity/Other Information:

CAS# 67-64-1:
Standard Draize Test, Eyes, Species: Rabbit, 20.00 MG, Severe.
Result:
Behavioral: Change in motor activity (specific assay).
Behavioral: Alteration of classical conditioning.
- American Journal of Ophthalmology., Ophthalmic Pub. Co., 435 N. Michigan Ave., Suite 1415, Chicago, IL 60611, Vol/p/yr: 29,1363, 1946

ACGIH A4 - Not Classifiable as a Human Carcinogen.

CAS #	Hazardous Components (Chemical Name)	NTP	IARC	ACGIH	OSHA
67-64-1	Acetone {2-Propanone}	n.a.	n.a.	A4	n.a.

12. ECOLOGICAL INFORMATION

No data available.

13. DISPOSAL CONSIDERATIONS

Waste Disposal Method: Dispose of in accordance with all applicable local, state, and federal regulations.

14. TRANSPORT INFORMATION

LAND TRANSPORT (US DOT):

DOT Proper Shipping Name: Acetone

DOT Hazard Class: 3 FLAMMABLE LIQUID
UN/NA Number: UN1090 **Packing Group:** II



Additional Transport Information: The shipper/supplier may apply one of the following exceptions: Combustible Liquid, Consumer Commodity, Limited Quantity, Viscous Liquid, Does Not Sustain Combustion, or others, as allowed under 49CFR Hazmat Regulations. Please consult 49CFR Subchapter C to ensure that subsequent shipments comply with these exceptions.

15. REGULATORY INFORMATION

EPA SARA (Superfund Amendments and Reauthorization Act of 1986) Lists

CAS #	Hazardous Components (Chemical Name)	S. 302 (EHS)	S. 304 RQ	S. 313 (TRI)
67-64-1	Acetone {2-Propanone}	No	Yes 5000 LB	No

This material meets the EPA 'Hazard Categories' defined for SARA Title III Sections 311/312 as indicated:	[X] Yes [ ] No	Acute (immediate) Health Hazard
	[X] Yes [ ] No	Chronic (delayed) Health Hazard
	[X] Yes [ ] No	Fire Hazard
	[ ] Yes [X] No	Sudden Release of Pressure Hazard
	[ ] Yes [X] No	Reactive Hazard

CAS #	Hazardous Components (Chemical Name)	Other US EPA or State Lists
67-64-1	Acetone {2-Propanone}	CAA HAP,ODC: No; CWA NPDES: No; TSCA: Yes - Inventory, 4 Test; CA PROP.65: No

16. OTHER INFORMATION

Revision Date: 04/15/2015
Preparer Name: W.M. Barr EHS Department (901)775-0100
Additional Information About This Product: No data available.

Company Policy or Disclaimer: The information contained herein is presented in good faith and believed to be accurate as of the effective date shown above. This information is furnished without warranty of any kind. Employers should use this information only as a supplement to other information gathered by them and must make independent determination of suitability and completeness of information from all sources to assure proper use of these materials and the safety and health of employees. Any use of this data and information must be determined by the user to be in accordance with applicable federal, state and local laws and regulations.

SAFETY DATA SHEET

SECTION 1: PRODUCT AND COMPANY INFORMATION			
PRODUCT TYPE:	Activated Carbon		
PRODUCT NAME:	Reactivated Carbon, including AquaCarb ® S Series, VOCarb ® S Series, and PureAssure ® FG Series		
COMPANY ID:	Evoqua Water Technologies LLC 181 Thorn Hill Drive, Warrendale, PA 15086		
TELEPHONE NUMBER:	**INFORMATION:**	**CORPORATE**	866.926.8420
	MEDICAL EMERGENCY:	**CHEMTREC**	800.424.9300
	TRANSPORTATION EMERGENCY:	**CHEMTREC**	800.424.9300
DATE PREPARED:	May 18, 2015	**REVISION:** 0	

SECTION 2: HAZARD(S) IDENTIFICATION

HMIS RATINGS		NFPA RATINGS	GUIDE
HEALTH	1	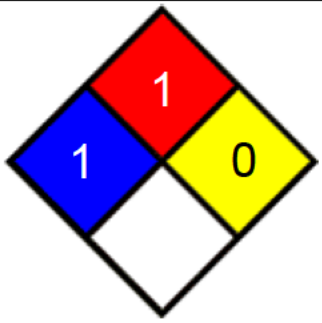	4 – EXTREME/SEVERE 3 – HIGH/SERIOUS 2 – MODERATE 1 - SLIGHT 0 – MINIMUM W – WATER REACTIVE OX - OXIDIZER
FLAMMABILITY	1		
PHYSICAL HAZARD	0		
PERSONAL PROTECTION	E		

PICTOGRAM	SIGNAL WORD	HAZARD STATEMENT
	WARNING	H315: Causes skin irritation H320: Causes eye irritation

PRECAUTIONARY STATEMENT(S)	
PREVENTION	P261: Avoid breathing dust/fume P264: Wash thoroughly after handling.
RESPONSE	P305: IF IN EYES: Irrigate for 15 minutes P304: IF INHALED: Remove to fresh air
STORAGE	P402: Store in a dry place. P403: Store in a well ventilated place. P404: Store in a closed container.

OTHER HAZARDS
NONE

SECTION 3: COMPOSITION/INFORMATION ON INGREDIENTS

PERCENT BY WEIGHT	COMMON NAME (Ingredient / Component)	CAS NO.	IMPURITIES
100%	Activated Carbon	7440-44-0	NONE

SECTION 4: FIRST-AID MEASURES	
NECESSARY FIRST AID INSTRUCTIONS	
INHALATION FIRST AID	Remove affected person to fresh air. Give artificial respiration ONLY if breathing has stopped and give CPR ONLY if there is no breathing and no pulse. Obtain medical attention immediately.
SKIN CONTACT FIRST AID	Wash skin for 5 minutes with flowing water and soap. Clothing should be washed before reuse. Obtain medical assistance if irritation develops.
EYE CONTACT FIRST AID	Immediately irrigate eyes with flowing water continuously for 15 minutes while holding eyelids open. Contacts should be removed before or during flushing. Get medical assistance if irritation develops.
INGESTION FIRST AID:	Do not induce vomiting. Obtain medical attention immediately.
DESCRIPTION OF MOST IMPORTANT SYMPTOMS	
No Additional Information Available.	
RECOMMENDATIONS FOR IMMEDIATE MEDICAL CARE	
No Additional Information Available.	

SECTION 5: FIRE-FIGHTING MEASURES	
SUITABLE EXTINGUISHING MEDIA	Water spray, carbon Dioxide, Foam or Dry Chemical
UNSUITABLE EXTINGUISHING MEDIA	None
SPECIFIC HAZARDS	Avoid producing suspensions of dust during handling and avoid exposure of suspensions to sources of ignition. Suspensions of - 40 mesh particles may explode if exposed to strong ignition sources. Carbon monoxide and carbon dioxide gas may be emitted upon combustion of material Contact with strong oxidizers such as ozone or liquid oxygen may cause rapid combustion.
PERSONAL PROTECTIVE EQUIPMENT	In the event of a fire, wear full protective clothing and NIOSH approved self-contained breathing apparatus with full face piece, operated in positive pressure mode.

SECTION 6: ACCIDENTAL RELEASE MEASURES	
PERSONAL PRECAUTIONS, PROTECTIVE EQUIPMENT AND EMERGENCY PROCEDURES	
PERSONAL PRECAUTIONS	Handle in accordance with good industrial hygiene and safety practices. These practices include avoiding unnecessary exposure and removal of a material from eyes, skin, and clothing.
ENVIRONMENTAL PRECAUTIONS	The material, in its original state, is not harmful to the environment.
CONTAINMENT AND CLEAN-UP	Clean up spills in a manner that does not disperse dust into the air. Avoid introducing materials into waterway.
OTHER INFORMATION	None.

SECTION 7: HANDLING AND STORAGE	
PRECAUTIONS FOR SAFE HANDLING	Avoid dispersion into air. Keep containers dry and closed. Follow good handling and housekeeping practices to minimize spills, generation of airborne dusts, and accumulation of dusts on exposed surfaces. Use with adequate exhaust ventilation to

	draw dust away from workers' breathing zones. Prevent or minimize exposures to dusts by using appropriate respirators, gloves and eye protection. Wash exposed skin areas thoroughly with soap and water. Use caution when pouring, using pneumatic transport, swirling, etc. as this material can become electrostatically charged and present a dust explosion hazard.
CONDITIONS FOR SAFE STORAGE	Avoid spilling material so as to avoid creating a dust suspension. Store at ambient atmospheric conditions. Product should be stored in a closed dry container. Maintain good housekeeping procedures. Store away from strong oxidizers such as ozone, liquid oxygen, chlorine, permanganate, etc.

SECTION 8: EXPOSURE CONTROLS/PERSONAL PROTECTION			
ENGINEERING CONTROLS	Provide ventilation if necessary to minimize exposure. General ventilation is usually acceptable, but local mechanical exhaust ventilation is preferred at sources of air contamination such as open process equipment.		
RESPIRATORY PROTECTION	If use conditions generate dust levels above the TLV / PEL, wear a NIOSH-approved particulate respirator or a NIOSH-approved cartridge respirator fitted with dust filters.		
SKIN PROTECTION	Wear appropriate dust resistant clothing and gloves.		
EYE/FACE PROTECTION	Safety glasses with side shields. If eye contact or dusty conditions are likely, wear dust tight goggles.		
EXPOSURE LIMITS/GUIDELINES	Exposure limits have not been established for this material. However, the following are widely accepted limits for exposure to otherwise nontoxic particulates:		
	RESULT	**OSHA 8 HR** mg/m³	**ACGIH TLV 8 HR** mg/m³
PARTICULATES NOT OTHERWISE REGULATED (PNOR)	TWA	15 (total) 5 (respirable)	- - - - - -
PARTICULATES NOT OTHERWISE CLASSIFIED (PNOC)	TWA	- - - - - -	10 (inhalable) 3 (respirable)

SECTION 9: PHYSICAL AND CHEMICAL PROPERTIES			
COLOR	Black	**MOLECULAR WEIGHT**	NA
ODOR	NONE	**ODOR THERSHOLD**	NONE
pH VALUE	NA	**VAPOR PRESSURE**	0
MELTING POINT	NA	**VAPOR DENSITY**	SOLID
FREEZING POINT	NA	**RELATIVE DENSITY**	0.4 to 0.7
INITIAL BOILING POINT	NA	**SOLUBILITY**	NOT SOLUABLE
FLASHPOINT	NA	**PARTITION COEFFICEINT**	NA
EVAPORATION RATE	NA	**AUTO IGNITION TEMP.**	>220° C
FLAMMABILITY	>220° C	**DECOMP. TEMP.**	NA
UEL	NA	**VISCOSITY**	NA
LEL	NA		

SECTION 10: STABILITY AND REACTIVITY	
REACTIVIVITY	NA
CHEMICAL STABILITY	Stable
POSSIBILITY OF HAZARDOUS REACTIONS	None
CONDITIONS TO AVOID	Contact with strong oxidizers such as ozone, liquid oxygen, chlorine, permanganate, etc. may result in rapid combustion. Avoid contact with strong acids.
HAZAROUS DECOMPOSITION PRODUCTS	Hazardous decomposition will produce carbon oxides.

SECTION 11: TOXICOLOGICAL INFORMATION		
INHALATION	ACUTE	Inhalation of carbon dust is mildly irritating to the lungs and can immediately give rise to an increased mucociliary transport and airway resistance mediated by the vagus. Inhalation LC50 (Rat) > 64.4 mg / l
	CHRONIC	There are no known chronic inhalation effects
SKIN	ACUTE	Skin contact is expected to be slightly irritating. The primary skin irritation index (rabbit) is 0.
	CHRONIC	There are no known chronic dermal effects.
EYE	ACUTE	Eye contact can cause conjunctivitis, epithelial hyperplasia of the cornea, as well as eczematous inflammation of the eyelids.
INGESTION	ACUTE	Activated carbon is practically nontoxic. The probable oral lethal dose (human) is greater than 15 g / kg; more than one quart (2.2 lbs) for a 150 lb person.
	CHRONIC	There are no known chronic ingestion effects.
LD50		
LC50		
ACUTE TOXICITY ESTIMATES		
CARCINOGENICITY/MUTAGENICITY		There are no known carcinogenic/mutagenic effects.
REPRODUCTIVE EFFECTS		There are no known reproductive effects.
NEUROTOXICITY		There are no known neurotoxic effects.
OTHER EFFECTS		No other effects of carbon are known.
TARGET ORGANS		Target organs include the respiratory system and the cardiovascular system.

SECTION 12: ECOLOGICAL INFORMATION
The material, in its original state, is not harmful to the environment.

SECTION 13: DISPOSAL CONSIDERATIONS	
SPILL/LEAK PROCEDURES	Clean spills in a manner that does not disperse dust into the air, preferably a wet-down procedure or vacuum.
CLEANUP	If material is not contaminated, spilled media can be re-bagged. Material that cannot be used or chemically reprocessed and empty containers should be disposed of in accordance with all applicable regulations. Product containers should be thoroughly emptied before disposal.
REGULATORY REQUIREMENTS	Generators of waste material are required to evaluate all waste for compliance with RCRA and any local disposal procedures and regulations. NOTE: State and local regulations may be more stringent than federal regulations.
DISPOSAL	Material that cannot be used or chemically reprocessed and empty containers should be disposed of in accordance with all applicable regulations. Product containers should be thoroughly emptied before disposal. Warning: Wet activated carbon depletes oxygen from the air and therefore dangerously low levels of oxygen may be encountered. Whenever workers enter a vessel containing activated carbon, the vessel's oxygen content should be determined and work procedures for potentially low oxygen areas should be followed.

SECTION 14: TRANSPORT INFORMATION		
LAND – DOT	**UN/NA IDENTIFICATION NUMBER:**	Not Applicable to unused finished product
	UN-PROPER SHIPPING NAME:	Not Applicable to unused finished product
	TRANSPORT HAZARD CLASS:	Not Applicable to unused finished product
	PACKING GROUP:	Not Applicable to unused finished product
	MARINE POLLUTANT:	Not Applicable to unused finished product
	HAZARD CLASS:	Not Applicable to unused finished product

WATER – IMO/IMDG	**UN/NA IDENTIFICATION NUMBER:**	Not Applicable to unused finished product
	UN-PROPER SHIPPING NAME:	Not Applicable to unused finished product
	TRANSPORT HAZARD CLASS:	Not Applicable to unused finished product
	PACKING GROUP:	Not Applicable to unused finished product
	MARINE POLLUTANT:	Not Applicable to unused finished product
AIR – ICAO/IATA *For product quantities less than 0.5 Kg*	**UN/NA IDENTIFICATION NUMBER:**	Not Applicable to unused finished product
	UN-PROPER SHIPPING NAME:	Not Applicable to unused finished product
	TRANSPORT HAZARD CLASS:	Not Applicable to unused finished product
	PACKING GROUP:	Not Applicable to unused finished product
	MARINE POLLUTANT:	Not Applicable to unused finished product
This material does not meet the definition of a self-heating substance (Class 4.2) as determined by the test protocol for a "self-heating substance" United Nations Transportation of Dangerous Goods, Manual of Tests and Criteria, Part III, Section 33.3.1.6 – Test N.4 – Test Method for Self-Heating Substances.		

SECTION 15: REGULATORY INFORMATION	
OSHA	Hazard Communication Standard: Irritant
OSHA	Process Safety Standard: No
CAA	Section 112r: No
CERCLA	Section 103: No RQ: None
SARA	Section 302: No; SARA Section 304: No; SARA Section 313: No
SARA HAZARD CATEGORIES 311/312	**Acute:** Yes Chronic: No **Fire:** No **Reactive:** No **Sudden Pressure Release:** No
TSCA	The ingredients of this product are on the TSCA Inventory List.

SECTION 16: OTHER INFORMATION	
DISCLAIMER:	The information contained herein is based on data considered accurate. However, no warranty is expressed or implied regarding the accuracy of these data or the results to be obtained from the user thereof. It is the buyer's responsibility to ensure that its activities comply with federal, state, provincial and local laws.
REVISION INDICATOR:	Revision 0: (This SDS replaces the former MSDS for this product pursuant to OSHA 1910.1200(g) Appendix D. The MSDS for this product should be considered obsolete).

Safety Data Sheet

according to 1907/2006/EC (REACH), 1272/2008/EC (CLP), 29CFR1910/1200 and GHS Rev. 3

Effective date: 12.08.2015 **Revision** : 12.10.2015

Trade Name: Alconox

1 Identification of the substance/mixture and of the supplier

1.1 Product identifier

Trade Name: Alconox
Synonyms:
Product number: Alconox

1.2 Application of the substance / the mixture : Cleaning material/Detergent

1.3 Details of the supplier of the Safety Data Sheet

Manufacturer
Alconox, Inc.
30 Glenn Street
White Plains, NY 10603
1-914-948-4040

Supplier
Not Applicable

Emergency telephone number:
ChemTel Inc
North America: 1-800-255-3924
International: 01-813-248-0585

2 Hazards identification

2.1 Classification of the substance or mixture:

In compliance with EC regulation No. 1272/2008, 29CFR1910/1200 and GHS Rev. 3 and amendments.

Hazard-determining components of labeling:
Tetrasodium Pyrophosphate
Sodium tripolyphosphate
Sodium Alkylbenzene Sulfonate

2.2 Label elements:

Skin irritation, category 2.
Eye irritation, category 2A.

Hazard pictograms:



Signal word: Warning

Hazard statements:
H315 Causes skin irritation.
H319 Causes serious eye irritation.

Precautionary statements:
P264 Wash skin thoroughly after handling.
P280 Wear protective gloves/protective clothing/eye protection/face protection.
P302+P352 If on skin: Wash with soap and water.
P305+P351+P338 If in eyes: Rinse cautiously with water for several minutes. Remove contact lenses if present and easy to do. Continue rinsing.
P321 Specific treatment (see supplemental first aid instructions on this label).
P332+P313 If skin irritation occurs: Get medical advice/attention.
P362 Take off contaminated clothing and wash before reuse.
P501 Dispose of contents and container as instructed in Section 13.

Safety Data Sheet

according to 1907/2006/EC (REACH), 1272/2008/EC (CLP), 29CFR1910/1200 and GHS Rev. 3

Effective date: 12.08.2015 **Revision** : 12.10.2015

Trade Name: Alconox

Additional information: None.

Hazard description

Hazards Not Otherwise Classified (HNOC): None

Information concerning particular hazards for humans and environment:

The product has to be labelled due to the calculation procedure of the "General Classification guideline for preparations of the EU" in the latest valid version.

Classification system:

The classification is according to EC regulation No. 1272/2008, 29CFR1910/1200 and GHS Rev. 3 and amendments, and extended by company and literature data. The classification is in accordance with the latest editions of international substances lists, and is supplemented by information from technical literature and by information provided by the company.

3 Composition/information on ingredients

3.1 Chemical characterization : None

3.2 Description : None

3.3 Hazardous components (percentages by weight)

Identification	Chemical Name	Classification	Wt. %
CAS number: 7758-29-4	Sodium tripolyphosphate	Skin Irrit. 2 ; H315 Eye Irrit. 2; H319	12-28
CAS number: 68081-81-2	Sodium Alkylbenzene Sulfonate	Acute Tox. 4; H303 Skin Irrit. 2 ; H315 Eye Irrit. 2; H319	8-22
CAS number: 7722-88-5	Tetrasodium Pyrophosphate	Skin Irrit. 2 ; H315 Eye Irrit. 2; H319	2-16

3.4 Additional Information : None.

4 First aid measures

4.1 Description of first aid measures

General information: None.

After inhalation:

Maintain an unobstructed airway.

Loosen clothing as necessary and position individual in a comfortable position.

After skin contact:

Wash affected area with soap and water.

Seek medical attention if symptoms develop or persist.

After eye contact:

Rinse/flush exposed eye(s) gently using water for 15-20 minutes.

Remove contact lens(es) if able to do so during rinsing.

Seek medical attention if irritation persists or if concerned.

After swallowing:

Rinse mouth thoroughly.

Seek medical attention if irritation, discomfort, or vomiting persists.

Safety Data Sheet

according to 1907/2006/EC (REACH), 1272/2008/EC (CLP), 29CFR1910/1200 and GHS Rev. 3

Effective date: 12.08.2015 **Revision** : 12.10.2015

Trade Name: Alconox

4.2 Most important symptoms and effects, both acute and delayed

None

4.3 Indication of any immediate medical attention and special treatment needed:

No additional information.

5 Firefighting measures

5.1 Extinguishing media

Suitable extinguishing agents:

Use appropriate fire suppression agents for adjacent combustible materials or sources of ignition.

For safety reasons unsuitable extinguishing agents : None

5.2 Special hazards arising from the substance or mixture :

Thermal decomposition can lead to release of irritating gases and vapors.

5.3 Advice for firefighters

Protective equipment:

Wear protective eye wear, gloves and clothing.
Refer to Section 8.

5.4 Additional information :

Avoid inhaling gases, fumes, dust, mist, vapor and aerosols.
Avoid contact with skin, eyes and clothing.

6 Accidental release measures

6.1 Personal precautions, protective equipment and emergency procedures :

Ensure adequate ventilation.
Ensure air handling systems are operational.

6.2 Environmental precautions :

Should not be released into the environment.
Prevent from reaching drains, sewer or waterway.

6.3 Methods and material for containment and cleaning up :

Wear protective eye wear, gloves and clothing.

6.4 Reference to other sections : None

7 Handling and storage

7.1 Precautions for safe handling :

Avoid breathing mist or vapor.
Do not eat, drink, smoke or use personal products when handling chemical substances.

7.2 Conditions for safe storage, including any incompatibilities :

Store in a cool, well-ventilated area.

7.3 Specific end use(s):

No additional information.

Safety Data Sheet

according to 1907/2006/EC (REACH), 1272/2008/EC (CLP), 29CFR1910/1200 and GHS Rev. 3

Effective date: 12.08.2015 **Revision** : 12.10.2015

Trade Name: Alconox

8 Exposure controls/personal protection





8.1 Control parameters :

7722-88-5, Tetrasodium Pyrophosphate, OSHA TWA 5 mg/m3.

8.2 Exposure controls

Appropriate engineering controls:

Emergency eye wash fountains and safety showers should be available in the immediate vicinity of use or handling.

Respiratory protection:

Not needed under normal conditions.

Protection of skin:

Select glove material impermeable and resistant to the substance.

Eye protection:

Safety goggles or glasses, or appropriate eye protection.

General hygienic measures:

Wash hands before breaks and at the end of work.
Avoid contact with skin, eyes and clothing.

9 Physical and chemical properties

Appearance (physical state, color):	White and cream colored flakes - powder	**Explosion limit lower**: **Explosion limit upper**:	Not determined or not available. Not determined or not available.
Odor:	Not determined or not available.	**Vapor pressure at 20°C**:	Not determined or not available.
Odor threshold:	Not determined or not available.	**Vapor density**:	Not determined or not available.
pH-value:	9.5 (aqueous solution)	**Relative density**:	Not determined or not available.
Melting/Freezing point:	Not determined or not available.	**Solubilities**:	Not determined or not available.
Boiling point/Boiling range:	Not determined or not available.	**Partition coefficient (n-octanol/water)**:	Not determined or not available.
Flash point (closed cup):	Not determined or not available.	**Auto/Self-ignition temperature**:	Not determined or not available.
Evaporation rate:	Not determined or not available.	**Decomposition temperature**:	Not determined or not available.

Safety Data Sheet

according to 1907/2006/EC (REACH), 1272/2008/EC (CLP), 29CFR1910/1200 and GHS Rev. 3

Effective date: 12.08.2015 **Revision** : 12.10.2015

Trade Name: Alconox

Flammability (solid, gaseous):	Not determined or not available.	**Viscosity**:	a. Kinematic: Not determined or not available. b. Dynamic: Not determined or not available.
Density at 20°C:	Not determined or not available.		

10 Stability and reactivity

10.1 Reactivity : None

10.2 Chemical stability : None

10.3 Possibility hazardous reactions : None

10.4 Conditions to avoid : None

10.5 Incompatible materials : None

10.6 Hazardous decomposition products : None

11 Toxicological information

11.1 Information on toxicological effects :

Acute Toxicity:

Oral:

: LD50 > 5000 mg/kg oral rat - Product .

Chronic Toxicity: No additional information.

Skin corrosion/irritation:

Sodium Alkylbenzene Sulfonate: Causes skin irritation. .

Serious eye damage/irritation:

Sodium Alkylbenzene Sulfonate: Causes serious eye irritation .

Tetrasodium Pyrophosphate: Rabbit - Risk of serious damage to eyes .

Respiratory or skin sensitization: No additional information.

Carcinogenicity: No additional information.

IARC (International Agency for Research on Cancer): None of the ingredients are listed.

NTP (National Toxicology Program): None of the ingredients are listed.

Germ cell mutagenicity: No additional information.

Reproductive toxicity: No additional information.

STOT-single and repeated exposure: No additional information.

Additional toxicological information: No additional information.

12 Ecological information

Safety Data Sheet

according to 1907/2006/EC (REACH), 1272/2008/EC (CLP), 29CFR1910/1200 and GHS Rev. 3

Effective date: 12.08.2015 **Revision** : 12.10.2015

Trade Name: Alconox

12.1 Toxicity:

Sodium Alkylbenzene Sulfonate: Fish, LC50 1.67 mg/l, 96 hours.
Sodium Alkylbenzene Sulfonate: Aquatic invertebrates, EC50 Daphnia 2.4 mg/l, 48 hours.
Sodium Alkylbenzene Sulfonate: Aquatic Plants, EC50 Algae 29 mg/l, 96 hours.
Tetrasodium Pyrophosphate: Fish, LC50 - other fish - 1,380 mg/l - 96 h.
Tetrasodium Pyrophosphate: Aquatic invertebrates, EC50 - Daphnia magna (Water flea) - 391 mg/l - 48 h.

12.2 Persistence and degradability: No additional information.

12.3 Bioaccumulative potential: No additional information.

12.4 Mobility in soil: No additional information.

General notes: No additional information.

12.5 Results of PBT and vPvB assessment:

PBT: No additional information.

vPvB: No additional information.

12.6 Other adverse effects: No additional information.

13 Disposal considerations

13.1 Waste treatment methods (consult local, regional and national authorities for proper disposal)

Relevant Information:

It is the responsibility of the waste generator to properly characterize all waste materials according to applicable regulatory entities. (US 40CFR262.11).

14 Transport information

14.1 UN Number: None
ADR, ADN, DOT, IMDG, IATA

14.2 UN Proper shipping name: None
ADR, ADN, DOT, IMDG, IATA

14.3 Transport hazard classes:
ADR, ADN, DOT, IMDG, IATA

Class: None
Label: None
LTD. QTY: None

US DOT
Limited Quantity Exception: None

Bulk:
RQ (if applicable): None
Proper shipping Name: None
Hazard Class: None
Packing Group: None
Marine Pollutant (if applicable): No additional information.

Non Bulk:
RQ (if applicable): None
Proper shipping Name: None
Hazard Class: None
Packing Group: None
Marine Pollutant (if applicable): No additional information.

Safety Data Sheet

according to 1907/2006/EC (REACH), 1272/2008/EC (CLP), 29CFR1910/1200 and GHS Rev. 3

Effective date: 12.08.2015 **Revision** : 12.10.2015

Trade Name: Alconox

	Comments: None	**Comments:** None
14.4	**Packing group:** ADR, ADN, DOT, IMDG, IATA	None
14.5	**Environmental hazards** :	None
14.6	**Special precautions for user:**	None
	Danger code (Kemler):	None
	EMS number:	None
	Segregation groups:	None
14.7	**Transport in bulk according to Annex II of MARPOL73/78 and the IBC Code:**	Not applicable.
14.8	**Transport/Additional information:**	
	Transport category:	None
	Tunnel restriction code:	None
	UN "Model Regulation":	None

15 Regulatory information

15.1 Safety, health and environmental regulations/legislation specific for the substance or mixture.

North American

SARA

Section 313 (specific toxic chemical listings): None of the ingredients are listed.
Section 302 (extremely hazardous substances): None of the ingredients are listed.

CERCLA (Comprehensive Environmental Response, Clean up and Liability Act) Reportable

Spill Quantity: None of the ingredients are listed.

TSCA (Toxic Substances Control Act):

Inventory: All ingredients are listed.
Rules and Orders: Not applicable.

Proposition 65 (California):

Chemicals known to cause cancer: None of the ingredients are listed.

Chemicals known to cause reproductive toxicity for females: None of the ingredients are listed.

Chemicals known to cause reproductive toxicity for males: None of the ingredients are listed.

Chemicals known to cause developmental toxicity: None of the ingredients are listed.

Canadian

Canadian Domestic Substances List (DSL):
All ingredients are listed.

EU

REACH Article 57 (SVHC): None of the ingredients are listed.

Safety Data Sheet

according to 1907/2006/EC (REACH), 1272/2008/EC (CLP), 29CFR1910/1200 and GHS Rev. 3

Effective date: 12.08.2015 **Revision** : 12.10.2015

Trade Name: Alconox

Germany MAK: Not classified.

Asia Pacific

Australia

Australian Inventory of Chemical Substances (AICS): All ingredients are listed.

China

Inventory of Existing Chemical Substances in China (IECSC): All ingredients are listed.

Japan

Inventory of Existing and New Chemical Substances (ENCS): All ingredients are listed.

Korea

Existing Chemicals List (ECL): All ingredients are listed.

New Zealand

New Zealand Inventory of Chemicals (NZOIC): All ingredients are listed.

Philippines

Philippine Inventory of Chemicals and Chemical Substances (PICCS): All ingredients are listed.

Taiwan

Taiwan Chemical Substance Inventory (TSCI): All ingredients are listed.

16 Other information

Abbreviations and Acronyms: None

Summary of Phrases

Hazard statements:

H315 Causes skin irritation.
H319 Causes serious eye irritation.

Precautionary statements:

P264 Wash skin thoroughly after handling.
P280 Wear protective gloves/protective clothing/eye protection/face protection.
P302+P352 If on skin: Wash with soap and water.
P305+P351+P338 If in eyes: Rinse cautiously with water for several minutes. Remove contact lenses if present and easy to do. Continue rinsing.
P321 Specific treatment (see supplemental first aid instructions on this label).
P332+P313 If skin irritation occurs: Get medical advice/attention.
P362 Take off contaminated clothing and wash before reuse.
P501 Dispose of contents and container as instructed in Section 13.

Manufacturer Statement:

The information provided in this Safety Data Sheet is correct to the best of our knowledge, information and belief at the date of its publication. The information given is designed only as guidance for safe handling, use, processing, storage, transportation, disposal and release and is not to be considered a warranty or quality specification. The information relates only to the specific material designated and may not be valid for such material used in combination with any other materials or in any process, unless specified in the text.

NFPA: 1-0-0

Safety Data Sheet

according to 1907/2006/EC (REACH), 1272/2008/EC (CLP), 29CFR1910/1200 and GHS Rev. 3

Effective date: 12.08.2015 **Revision** : 12.10.2015

Trade Name: Alconox

HMIS: 1-0-0

1. CHEMICAL IDENTIFICATION

Product Name AN-450FG
Recommended Use ..... Water Treatment Antiscalent, Descaler
Restrictions on Use ..... Not Determined
Emergency Number ..... Infotrac 1-800-535-5053
Customer Service Hotline ..... 281-286-7562 (8 AM to 5 PM CST)

Supplier of SDS:

Analytix Technologies LLC
PO Box 590466
Houston TX 77259-0466
Tel: (281) 286-7562
Web: www.analytixtechnoloies.com
Email: analytix@earthlink.net

2. HAZARD IDENTIFICATION

Hazard classification

This material is not hazardous under the criteria of the Federal OSHA Hazard Communication Standard 29CFR 1910.1200.

(a) GHS Classification of the substance/mixture and any national or regional information
Classification according to GHS: Not classified

(b) GHS Label Elements

Hazard Pictogram	None
Signal Word	None
Hazard Statements	None
Precautionary Statements	None

(c) Other Hazards: None

Other hazards: no data available

3. COMPOSITION / INFORMATION ON INGREDIENTS

Mixture of water treatment chemicals

Chemical Name	CAS No.	GHS Classification
Sodium Polycarboxylate	Not Hazardous	None
Water	7732-18-5	None

Specific chemical identity and/or percentages of composition have been withheld as a trade secret

4. FIRST AID MEASURES

Eyes: Immediately flush with water for at least 15 minutes, lifting the upper and lower eyelids intermittently. See a medical doctor or ophthalmologist immediately.

Skin: Immediate first aid is not likely to be required. Wash with plenty of soap and water. Get medical attention if irritation occurs and persists.

5. FIRST AID MEASURES (continued)

Ingestion: Immediate first aid is not likely to be required. Rinse mouth with water. Dilute by giving 2 glasses of water. Do not induce vomiting. Never give anything by mouth to an unconscious person. A physician can be contacted for advice.

Inhalation: Immediate first aid is not likely to be required. Remove to fresh air. If breathing difficulty or discomfort occurs and persists, contact a medical doctor.

NOTES TO MEDICAL DOCTOR: Treatment is controlled removal of exposure with symptomatic and supportive care.

6. FIRE FIGHTING MEASURES

SUITABLE EXTINGUISHING MEDIA: alcohol resistant foam, CO2, powder, water spray

UNSUITABLE EXTINGUISHING MEDIA: Water jet

SPECIAL FIRE FIGHTING PROCEDURES Wear self-contained breathing apparatus with a full face piece operated in the positive pressure demand mode when fighting fires.

HAZARDOUS DECOMPOSITION: CO, CO2

6. ACCIDENTAL RELEASE MEASURES

PROTECTIVE PRECAUTIONS AND EMERGENCY PROCEDURES Keep unnecessary personnel away.
Wear appropriate protective equipment and clothing during clean-up. Do not breather mist or vapors. Ensure adequate ventilation

CONTAINMENT PROCEDURE Prevent further leakage or spillage if safe to do so. Contain spills to prevent migration and entry into waterway.

CLEANUP PROCEDURE Contain large spills with dikes and transfer material to appropriate containers for reclamation or disposal. Absorb remaining material or small spills with inert material and then place in a chemical waste container.

7. HANDLING AND STORAGE

Handling – Avoid contact with eyes, skin and clothing. Avoid breathing vapor or mist and use approved splash goggles and vapor respirator fitted with approved organic cartridge if vaporization or misting occurs. Use with adequate ventilation.

Storage: Store at > 32 ^{o}F. Stir well before use. Keep containers tightly closed when not in use and when in transit.

8. EXPOSURE CONTROLS/PERSONAL PROTECTION EQUIPMENT

Control Parameters: No specific occupational exposure limit have been established.

Exposure Controls:

Eye Protection: Wear Face Shield or chemical splash goggles meeting ANSI Z87.1 or approved equivalent.
Hand & Body Protection: Minimize skin contact by wearing protective PVC or Neoprene gloves, overalls or apron is also recommended.
Respiratory Protection: None required under normal handling and transfer conditions. An approved respiratory protection program meeting OSHA 1910.134 and ANSI Z88.2 requirements or equivalent must be followed whenever workplace conditions warrant use of a respirator. Where vapors or mist may occur, wear a properly fitted NIOSH-approved or equivalent half-mask, air-purifying respirator fitted with NIOSH-approved organic vapor cartridges.

Engineering Controls: Facilities storing or utilizing this material should be equipped with adequate ventilation, eyewash and shower facility.

9. PHYSICAL AND CHEMICAL PROPERTIES

Appearance:	Pale Amber Clear Liquid
Upper/Lower Flammability Or Explosive Limits:	Not Determined
Odor:	Mild
Vapor Pressure:	17.5 Mm Hg @ 20^0c
Odor Threshold:	Not Determined
Vapor Density:	Not Determined
pH (1% solution):	4.0 – 5.0
Specific Gravity:	1.10 - 1.20
Melting Point/Freezing Point:	$< 0^0$ C
Solubility(in water):	Completely Soluble
Initial Boiling Point And Boiling Range:	101^0C To 103^0C
Flash Point:	Not Determined
Evaporation Rate:	Not Determined
Flammability (Solid, Gas):	Not Determined
Partition Coefficient: N-Octanol/Water:	Not Determined
Auto-Ignition Temperature:	Not Determined
Decomposition Temperature:	Not Determined
Viscosity:	50 – 350 cps

Note: The above physical data are typical values. They should not be construed as specification for the product.

10. STABILITY AND REACTIVITY

REACTIVITY : No Data Available
STABILITY: Stable under normal conditions
CONDITIONS TO AVOID: No Data Available
INCOMPATIBILITY: There are no known materials which are incompatible with this product
HAZARDOUS DECOMPOSITION: CO, CO2
HAZARDOUS POLYMERIZATION: Will not occur.

11. TOXICOLOGICAL INFORMATION

Acute Toxicity:
Dermal LD_{50}……..> 5000 mg/kg (rabbit)
Oral LD_{50} ……> 5000 mg/kg (rat)
Inhalation……data not available

Skin corrosion/irritation : No skin irritation
Serious eye damage/eye irritation: slight irritation
Sensitization: Product test data not available.
Specific Target Organ Systemic Toxicity (Single Exposure): Product test data not available.
Specific Target Organ Systemic Toxicity (Repeated Exposure): Product test data not available.
Carcinogenicity: Product test data not available.
Teratogenicity: Product test data not available.
Reproductive toxicity: Product test data not available.
Mutagenicity: Product test data not available.
Aspiration Hazard: Product test data not available.

12. ECOLOGICAL INFORMATION

Toxicity data for a compositionally similar material are as follows:

Rainbow trout (Salmo gairdneri) 96 Hour LC50:…….	>	1,000 mg/L
96 hr NOEC: ……	=	1,000 mg/L
Bluegill sunfish 96 hr LC50 :……	>	1,000 mg/L
96 hr NOEC: ……..	=	1,000 mg/L
Daphnia magna 48 hr EC50 :...…….	>	1,000 mg/L
48 hr NOEC:……	=	1,000 mg/L
Zebra fish, 96 Hour LC50:…….	>	1,000 mg/L
Brown shrimp, 96 Hour LC50:……..	>	9,800 mg/L

* LC50: Lethal Concentration to 50 % of the test organism. ** NOEC: No Observed Effect Concentration
* EC50: Effective Concentration with some effect in 50% of the test organism,

13. DISPOSAL CONSIDERATION

Disposal Method: For small spills, neutralize with lime or soda ash and flush away with plenty of water.
For large spillage absorb spillage onto sand or other absorbent material and dispose of as solid waste as per local regulations (e.g. incineration). Surplus product can be incinerated.

If the product was supplied in a single use container, care should be taken to dispose of the container in a responsible manner and in accordance with applicable regulations. Label precautions should be followed for any residual material in the container. Whenever possible, our company encourages recycling of containers.

14. TRANSPORT INFORMATION

U.S. DOT (Department of Transportation): Nonregulated

Other Shipping Information – DOT Marking – Not applicable
Hazardous Substance/RQ – Not applicable
49 STCC Number – Not applicable

Keep container tightly closed. Protect against physical damage.

15. REGULATORY INFORMATION

Following information pertains to each active component in the product, when applicable.
UNITED STATES
SARA TITLE 3 (Superfund Amendments and Reauthorization Act) – Not listed
Section 302 Extremely Hazardous Substances (40 CFR 355) – Not listed
Section 311 Hazard Category (40 CFR 370) – Not Hazardous
Section 312 Threshold Planning Quantity (40 CFR 370) – None
Section 313 Reportable Ingredients (40 CFR 372) – Not listed

CERCLA (Comprehensive Environmental Response Compensation and Liability Act) (40 CFR 302.4)-Not listed.

TSCA (Toxic Substance Control Act) (40 CFR 710) – Listed

16. OTHER INFORMATION

Suggested HMIS Ratings -	Health - 1	Flammability - 0	Reactivity - 0	Protection - B
NFPA Rating	Health - 1	Flammability - 0	Reactivity - 0	Special - None

HMIS Rating notes - Protection B = Splash Proof Goggles, Gloves

Date Prepared: 9-10-2015

The information contained herein is to the best of our knowledge and belief, accurate, but any recommendations or suggestions made are without warranty or guarantee of results, expressed or implied. We therefore, assume no liability for loss or damage incurred by following these suggestions. Any determination of itness for a particular purpose is the buyer's responsibility. Analytix Technologies urges persons receiving this information to make their own determination as to the information's suitability and completeness for their particular application. Analytix Technologies' only obligation will be to replace such quantity of product proved to be defective. User assumes all risks and liability whatsoever in connection with the suitability of the product for the users intended application. Analytix Technologies shall not be responsible in tort, contract or under any theory for any loss or damage, incidental or consequential, arising out of the use of or the inability to use the products.

Analytix Technologies LLC

SAFETY DATA SHEET

Date Prepared; 8-10-2015
Revision number 1.00

1. IDENTIFICATION OF THE SUBSTANCE/PREPARATION AND OF THE COMPANY/UNDERTAKING

Product identifier

Product name AP-9525

Other means of identification

Product code 9525
Synonyms None

Recommended use of the chemical and restrictions on use

Recommended use [RU] No information available
Uses advised against No information available

Details of the supplier of the safety data sheet

Supplier

Analytix Technologies LLC
PO Box 590466
Houston TX 77259-0466
Tel: (281) 286-7562
Web: www.analytixtechnoloies.com
Email: analytix@earthlink.net

Emergency telephone number

24 Hour Emergency Phone Number Infotrac 1-800-535-5053

2. HAZARDS IDENTIFICATION

Classification

OSHA Regulatory Status
This chemical is considered hazardous by the 2012 OSHA Hazard Communication Standard (29 CFR 1910.1200).

Skin corrosion/irritation	Category 1
Serious eye damage/eye irritation	Category 1
Corrosive to metals	Category 1

GHS Label elements, including precautionary statements

EMERGENCY OVERVIEW

Physical state	Color	Appearance	Odor
liquid	yellow-green	clear to slightly hazy	organic amine

2. HAZARDS IDENTIFICATION (continued)



DANGER

Hazard statements
Causes severe skin burns and eye damage
May be corrosive to metals

Precautionary Statements - Prevention
Do not breathe dust/fume/gas/mist/vapors/spray
Wash face, hands and any exposed skin thoroughly after handling
Wear protective gloves/protective clothing/eye protection/face protection
Keep only in original container

Precautionary Statements - Response
Immediately call a POISON CENTER or doctor/physician
IF IN EYES: Rinse cautiously with water for several minutes. Remove contact lenses, if present and easy to do. Continue rinsing
IF ON SKIN (or hair): Remove/Take off immediately all contaminated clothing. Rinse skin with water/shower
Wash contaminated clothing before reuse
IF INHALED: Remove victim to fresh air and keep at rest in a position comfortable for breathing
IF SWALLOWED: Rinse mouth. Do NOT induce vomiting
Absorb spillage to prevent material damage

Precautionary Statements - Storage
Store locked up
Store in corrosive resistant container with a resistant inner liner

Precautionary Statements - Disposal
Dispose of contents/container to an approved waste disposal plant

Other information
• Not applicable

Unknown acute toxicity
• 2% of the mixture consists of ingredient(s) of unknown toxicity

3. COMPOSITION/INFORMATION ON INGREDIENTS

Component	CAS-No	weight-%	TRADE SECRET
Melamine Resin	9003-08-1	Proprietary	*
Hydrochloric Acid	7647-01-0	< 0.3%	*
Water	7732-18-5	Proprietary	*

If CAS number is "proprietary", the specific chemical identity and percentage of composition has been withheld as a trade secret

*The exact percentage (concentration) of composition has been withheld as a trade secret

4. FIRST AID MEASURES

First Aid Measures

Eye contact
Remove contact lenses, if worn. Immediately flush with plenty of water for at least 15 minutes, holding eyelids apart to ensure flushing of the entire surface. Washing within one minute is essential to achieve maximum effectiveness. Seek medical advice immediately.

Skin contact
Immediately flush skin with plenty of soap and water for at least 15 minutes. Remove contaminated clothing and shoes. Wash contaminated clothing before reuse. If skin irritation occurs: Get medical advice/attention.

Ingestion
Do NOT induce vomiting. If vomiting should occur spontaneously, keep airway clear. Never give anything by mouth to an unconscious person. Get medical attention.

Inhalation
Remove to fresh air. If not breathing give artificial respiration. If breathing is difficult, give oxygen. Call a physician.

Most important symptoms and effects, both acute and delayed

Acute effects
Possible eye, skin, and respiratory tract irritation or burns.

Chronic effects
May aggravate exsiting skin, eye and lung conditions.

Indication of any immediate medical attention and special treatment needed

Note to physicians
Probable mucosal damage may contraindicate the use of gastric lavage.

5. FIRE-FIGHTING MEASURES

Extinguishing media

Suitable extinguishing media
Use extinguishing agent suitable for type of surrounding fire. This material is not expected to burn unless heated to dryness. Dry residue may ignite. Use water fog/spray, foam, carbon dioxide, or dry chemical to extinguish fire if residue ignites.

Extinguishing media which must not be used for safety reasons
No information available.

Special hazards arising from the substance or mixture

Special Hazard
Thermal decomposition (as may be experienced in a fire) may produce carbon monoxide gas, hydrogen cyanide, or oxides of nitrogen and sulfur.

Advice for firefighters

Firefighting measures
Cool exposed containers with water spray after extinguishing fire.

5. FIRE-FIGHTING MEASURES (continued)

Special protective equipment for firefighters
Wear positive-pressure self-contained breathing apparatus (SCBA) and protective fire fighting clothing (includes fire fighting helmet, coat, trousers,boots, and gloves).

Explosion data

Sensitivity to Mechanical Impact
None.

Sensitivity to Static Discharge
None.

6. ACCIDENTAL RELEASE MEASURES

Personal precautions, protective equipment and emergency procedures

Personal precautions: Wear suitable protective clothing and gloves.

Environmental precautions

Environmental precautions: Prevent from entering into soil, ditches, sewers, waterways and/or groundwater.

Methods and material for containment and cleaning up

Methods for containment: Prevent further leakage or spillage if safe to do so. Dike to collect large liquid spills.

Methods for cleaning up
Clean up spill immediately using inert absorbent materials such as clays, sand, earth, or other commercially available dry sweeping compound. Following containment, large spills should be pumped into salvage tanks.

7. HANDLING AND STORAGE

Precautions for safe handling

Advice on safe handling
Keep container closed when not in use
Wear chemical splash goggles, gloves, and protective clothing when handling.
Wash thoroughly after handling
Take off contaminated clothing and wash before reuse
Ensure that eyewash stations and safety showers are close to the workstation location.
Keep from freezing

Conditions for safe storage, including any incompatibilities

Technical measures and storage conditions
Keep container closed when not in use
Store the containers in a cool area.
Avoid storage temperatures below freezing, since product may stratify.

Incompatible products:
Strong oxidizers. Contact with copper, copper alloys, aluminum, mild steel or iron may cause corrosion/degradation.

8. EXPOSURE CONTROLS/PERSONAL PROTECTION

Control parameters

Exposure Guidelines

Component	weight-%	ACGIH TLV	OSHA PEL	NIOSH IDLH
Hydrochloric Acid 7647-01-0	< 0.3%	2 ppm Ceiling	5 ppm Ceiling; 7 mg/m^3 Ceiling	50 ppm IDLH

Appropriate engineering controls

Engineering controls
Local exhaust ventilation as necessary to maintain exposures to within applicable limits. Please refer to the ACGIH document, "Industrial Ventilation, A Manual of Recommended Practices", most recent edition, for details. If there are no applicable or established exposure limit requirements or guidelines, general ventilation should be sufficient.

Individual protection measures, such as personal protective equipment

Eye/face Protection
Wear safety glasses with side shields (or goggles). Do NOT wear contact lenses. If splashes are likely to occur: Face shield.

Hand Protection
Gloves impervious to liquid material.

Skin and body protection
Full protective clothing. Rubber boots. Rubber apron.

Respiratory protection
Use of adequate mechanical ventilation and normal protective equipment is appropriate under most conditions, unless working with product in a confined space. If significant vapors, mists or aerosols are present due to elevated temperatures/agitation/high altitudes, use NIOSH approved respirator (ANSI Z882.1980) or equivalent that is equipped with an organic vapor/mist cartridge.

Other personal protection data
After handling material and before eating, drinking or smoking, wash face and hands thoroughly with soap and water. Eyewash fountains and safety showers must be easily accessible.

Hygiene measures
Take off contaminated clothing and wash before reuse.

9. PHYSICAL AND CHEMICAL PROPERTIES

Information on basic physical and chemical properties

Physical state	liquid
Color	yellow-green
Appearance	clear to slightly hazy
Odor	organic amine
Odor threshold	No information available

Property	Values	Remarks / Method
pH	1.0 - 2.0	as is
Melting / freezing point	0 °C / 32 °F	No information available

9. PHYSICAL AND CHEMICAL PROPERTIES (continued)

Boiling point / boiling range	100 °C / 212 °F @ 760 mm Hg	No information available
Flash point	> 93 °C / > 200 °F	TCC
Evaporation rate	Equal to water	No information available
Flammability (solid, gas)	Not applicable	No information available
Flammability Limit in Air		
Upper flammability limit	Not applicable	No information available
Lower flammability limit	Not applicable	No information available
Vapor pressure	No information available	No information available
Vapor density	No information available	No information available
Specific gravity	~ 1.03	typical
Solubility (water)	completely; 100%	No information available
Solubility in other solvents	No information available	No information available
Partition coefficient: n-octanol/water	No information available	No information available
Autoignition temperature	Not applicable	No information available
Decomposition temperature	No information available	No information available
Kinematic viscosity	No information available	No information available
Dynamic viscosity	No information available	No information available

Other information

Density	No information available
Bulk Density	No information available
Explosive properties	No information available.
Oxidizing properties	No information available
Softening point	No information available
Molecular weight	No information available
Volatile organic compounds (VOCs) content	No information available
Percent Volatile, wt.%	< 90 %

10. STABILITY AND REACTIVITY

Reactivity

Reactivity
No data available.

Chemical stability

Chemical stability
Stable under normal conditions of handling, use and transportation.

Possibility of hazardous reactions

Possibility of hazardous reactions
None under normal processing.

Hazardous polymerization
Hazardous polymerization does not occur.

Conditions to avoid

Conditions to avoid
None known

10. STABILITY AND REACTIVITY (CONTINUED)

Incompatible materials

Materials to avoid
Strong oxidizers. Contact with copper, copper alloys, aluminum, mild steel or iron may cause corrosion/degradation.

Hazardous decomposition products

Hazardous decomposition products
Thermal decomposition (as may be experienced in a fire) may produce carbon monoxide gas, hydrogen cyanide, or oxides of nitrogen and sulfur.

11. TOXICOLOGICAL INFORMATION

Information on likely routes of exposure

Eye contact :
Based on pH, this product is expected to cause severe eye irritation, possibly resulting in burns and eye damage.

Skin contact : Prolonged and/or repeated contact will cause severe skin irritation and burns.

Ingestion ; May cause burns of the mouth, throat and stomach. Ingestion may cause gastrointestinal irritation, nausea, vomiting and diarrhea.

Inhalation ; Inhalation of mist or spray may irritate respiratory tract and may cause burns and difficulty breathing.

Acute toxicity - Product Information

Oral LD50	No information available
Dermal LD50	No information available
Inhalation LC50	No information available

Acute toxicity - Component Information

Component	weight-%	Oral LD50	Dermal LD50	Inhalation LC50
Melamine Resin 9003-08-1	Proprietary	> 10 g/kg (Rat)	> 10 g/kg (Rabbit)	--
Hydrochloric Acid 7647-01-0	< 0.3%	= 700 mg/kg (Rat)	> 5010 mg/kg (Rabbit)	= 3124 ppm (Rat) 1 h

Information on toxicological effects

Symptoms: No information available.

Delayed and immediate effects as well as chronic effects from short and long-term exposure

Skin corrosion/irritation: Causes burns
Serious eye damage/eye irritation: Risk of serious damage to eyes
Sensitization: No information available
Germ cell mutagenicity: No information available

Carcinogenicity
This product does not contain any components in concentrations greater than or equal to 0.1% that are listed as known or suspected carcinogens by NTP, IARC, ACGIH, or OSHA.

11. TOXICOLOGICAL INFORMATION (CONTINUED)

Reproductive toxicity: No information available

Specific target organ toxicity - Single exposure: No information available.

Specific target organ toxicity - Repeated exposure: No information available

Aspiration hazard: No information available.

Numerical measures of toxicity - Product Information

• 2% of the mixture consists of ingredient(s) of unknown toxicity

The following values are calculated based on chapter 3.1 of the GHS document

ATEmix (oral)	57167 mg/kg
ATEmix (dermal)	92372 mg/kg
ATEmix (inhalation-dust/mist)	167 mg/l

Other information: Conclusions are drawn from sources other than direct testing.

12. ECOLOGICAL INFORMATION

Ecotoxicity

Acute aquatic toxicity - Product Information

Fish	No information available
Crustacea	No information available
Algae/aquatic plants	No information available

Acute aquatic toxicity - Component Information

Component	weight-%	Algae/aquatic plants	Fish	Toxicity to daphnia and other aquatic invertebrates
Hydrochloric Acid 7647-01-0	< 0.3%	--	LC50 (96 h static) = 282 mg/L (Gambusia affinis)	--

Persistence and degradability

Persistence and degradability
No information available

Bioaccumulative potential

Bioaccumulative potential
No information available.

Mobility

Mobility: No information available

12. ECOLOGICAL INFORMATION (CONTINUED)

Results of PBT and vPvB assessment

PBT and vPvB assessment: No information available

Other adverse effects

Other information: No other ecological studies have been carried out on this product.

13. DISPOSAL CONSIDERATIONS

Waste treatment methods

Disposal of wastes
Recycle, if possible. If not, dispose of the waste material in accordance with all applicable federal, state and local laws and regulations regarding health and pollution.

Contaminated packaging
Since empty containers retain product residue, follow label warnings even after container is emptied.

RCRA

Is the unused product a RCRA hazardous waste if discarded? (Yes/No)	Yes
If yes, the EPA Hazardous Waste Code is:	D002 (corrosivity)

14. TRANSPORT INFORMATION

DOT Regulated

DOT UN/NA Number	UN3264
Proper shipping name	Corrosive Liquid, Acidic, Inorganic, N.O.S. (contains Hydrochloric Acid)
Hazard class	8
Packing group	III
ERG Number	154

ICAO/IATA Regulated

UN number	UN3264
Proper shipping name	Corrosive Liquid, Acidic, Inorganic, N.O.S. (contains Hydrochloric Acid)
Hazard class	8
Packing group	III
ERG Code	8L

IMDG Regulated

UN number	UN3264
Proper shipping name	Corrosive Liquid, Acidic, Inorganic, N.O.S. (contains Hydrochloric Acid)
Hazard class	8
Packing group	III
EmS	F-A; S-B

15. REGULATORY INFORMATION

International Inventories

TSCA (United States): All ingredients are on the inventory or exempt from listing
Australia (AICS): All ingredients are on the inventory or exempt from listing
Canada (DSL): All ingredients are on the inventory or exempt from listing
Canada (NDSL): None of the ingredients are on the inventory.
China (IECSC): All ingredients are on the inventory or exempt from listing
EINECS (European Inventory of Existing Chemical Substances): Some ingredients are not on the inventory.
ELINCS (European List of Notified Chemical Substances): None of the ingredients are on the inventory.
ENCS (Japan): All ingredients are on the inventory or exempt from listing
South Korea (KECL): All ingredients are on the inventory or exempt from listing
Philippines (PICCS): All ingredients are on the inventory or exempt from listing

Legend

TSCA - United States Toxic Substances Control Act Section 8(b) Inventory
AICS - Australian Inventory of Chemical Substances
DSL/NDSL - Canadian Domestic Substances List/Non-Domestic Substances List
IECSC - China Inventory of Existing Chemical Substances
EINECS/ELINCS - European Inventory of Existing Commercial Chemical Substances/EU List of Notified Chemical Substances
ENCS - Japan Existing and New Chemical Substances
KECL - Korean Existing and Evaluated Chemical Substances
PICCS - Philippines Inventory of Chemicals and Chemical Substances

U.S. Federal Regulations

CERCLA

This material, as supplied, contains one or more substances regulated as a hazardous substance under the Comprehensive Environmental Response Compensation and Liability Act (CERCLA) (40 CFR 302).

Component	CERCLA/SARA Hazardous Substance RQ	CERCLA/SARA - Section 302 Extremely Hazardous Substances TPQs	Calculated Product RQ
Hydrochloric Acid 7647-01-0	5000 lb final RQ; 2270 kg final RQ	500 lb TPQ (gas only)	--

CWA (Clean Water Act)

This product contains the following substances which are regulated pollutants pursuant to the Clean Water Act (40 CFR 122.21 and 40 CFR 122.42).

Component	CWA - Hazardous Substances	CWA - Reportable Quantities	CWA - Priority Pollutants	CWA - Toxic Pollutants
Hydrochloric Acid 7647-01-0	Present	5000 b RQ	--	--

SARA 311/312 Hazard Categories

Acute health hazard	Yes
Chronic health hazard	No
Fire hazard	No
Sudden release of pressure hazard	No
Reactive hazard	No

SARA 313

Section 313 of Title III of the Superfund Amendments and Reauthorization Act of 1986 (SARA). This product contains a chemical or chemicals which are subject to the reporting requirements of the Act and Title 40 of the Code of Federal Regulations, Part 372.

15. REGULATORY INFORMATION (CONTINUED)

Component	weight-%	SARA 313 - Threshold Values %
Hydrochloric Acid 7647-01-0	< 0.3%	1.0 % de minimis concentration (acid aerosols including mists, vapors, gas, fog, and other airborne forms of any particle size)

• The component listed in the table above is present at levels below the de minimis concentration for reporting.

U.S. State Regulations

California Proposition 65

This product may contain traces of a substance(s) known to the State of California to cause cancer.

U.S. State Right-to-Know Regulations

Hydrochloric Acid 7647-01-0	
Massachusetts Right to Know Law	Extraordinarily hazardous
Minnesota Hazardous Substance List	Present
New Jersey Right to Know List	sn 1012
Pennsylvania Right to Know List	Environmental hazard

16. OTHER INFORMATION

NFPA Rating	Health - 2	Flammability - 0	Instability - 0	Special Hazard -
HMIS Rating	Health - 2	Flammability - 0	Physical hazard - 0	Personal protection - B

Product code 9525

Preparation date 8-10-2015

Revision number 1.00

Disclaimer

The information contained herein is to the best of our knowledge and belief, accurate, but any recommendations or suggestions made are without warranty or guarantee of results, expressed or implied. We therefore, assume no liability for loss or damage incurred by following these suggestions. Any determination of fitness for a particular purpose is the buyer's responsibility. Analytix Technologies urges persons receiving this information to make their own determination as to the information's suitability and completeness for their particular application. Analytix Technologies' only obligation will be to replace such quantity of product proved to be defective. User assumes all risks and liability whatsoever in connection with the suitability of the product for the users intended application. Analytix Technologies shall not be responsible in tort, contract or under any theory for any loss or damage, incidental or consequential, arising out of the use of or the inability to use the products.

End of Safety Data Sheet

ANALYTIX TECHNOLOGIES LLC

SAFETY DATA SHEET

Revision date 2015-09-03 **Revision number** 1

1. IDENTIFICATION OF THE SUBSTANCE/PREPARATION AND OF THE COMPANY/UNDERTAKING

Product identifier

Product name AP-95030

Other means of identification

Product code 95030
Synonyms Water And Wastewater Treatment Coagulant/Flocculant

Recommended use of the chemical and restrictions on use

Recommended use [RU] No information available
Uses advised against No information available

Details of the supplier of the safety data sheet

Supplier Analytix Technologies LLC.
PO Box 590466
Houston TX 77259-0466
Hours: Monday-Friday 9:00-5:00 CST (Central Standard Time)

Contact Point analytix@earthlink.net

Emergency telephone number

24 Hour Emergency Phone Number Infotrac (800) 535-5053

2. HAZARDS IDENTIFICATION

Classification

OSHA Regulatory Status
This chemical is considered hazardous by the 2012 OSHA Hazard Communication Standard (29 CFR 1910.1200).

Skin corrosion/irritation	Category 2
Serious eye damage/eye irritation	Category 2
Corrosive to metals	Category 1

GHS Label elements, including precautionary statements

EMERGENCY OVERVIEW

Physical state	Color	Appearance	Odor
liquid	Colorless to amber	clear	No appreciable odor



WARNING

Hazard statements
Causes skin irritation
Causes serious eye irritation
May be corrosive to metals

Precautionary Statements - Prevention
Wash face, hands and any exposed skin thoroughly after handling
Wear protective gloves/protective clothing/eye protection/face protection
Keep only in original container

Precautionary Statements - Response
IF IN EYES: Rinse cautiously with water for several minutes. Remove contact lenses, if present and easy to do. Continue rinsing
If eye irritation persists: Get medical advice/attention
IF ON SKIN: Wash with plenty of soap and water
If skin irritation occurs: Get medical advice/attention
Take off contaminated clothing and wash before reuse
Absorb spillage to prevent material damage

Precautionary Statements - Storage
Store in corrosive resistant container with a resistant inner liner

Other information
• Harmful to aquatic life with long lasting effects

3. COMPOSITION/INFORMATION ON INGREDIENTS

Component	CAS-No	weight-%	TRADE SECRET
Trade Secret Ingredient	PROPRIETARY	25 - 35%	*

If CAS number is "proprietary", the specific chemical identity and percentage of composition has been withheld as a trade secret

*The exact percentage (concentration) of composition has been withheld as a trade secret

4. FIRST AID MEASURES

First Aid Measures

Eye contact
Remove contact lenses, if worn. Immediately flush with plenty of water for at least 15 minutes, holding eyelids apart to ensure flushing of the entire surface. Washing within one minute is essential to achieve maximum effectiveness. Get medical attention if irritation develops and persists.

Skin contact
Immediately flush skin with plenty of soap and water for at least 15 minutes. Remove contaminated clothing and shoes. Wash contaminated clothing before reuse. If skin irritation occurs: Get medical advice/attention.

Ingestion
Seek medical attention immediately. Give large amounts of water to drink. If vomiting should occur spontaneously, keep airway clear. Never give anything by mouth to an unconscious person.

Inhalation
Remove to fresh air. If not breathing give artificial respiration. If breathing is difficult, give oxygen. Call a physician.

Most important symptoms and effects, both acute and delayed

Acute effects
Possible eye, skin and respiratory tract irritation.

Chronic effects
May aggravate existing skin, eye, and lung conditions. Persons with kidney disorders have an increased risk from exposure based on general information found on aluminum salts.

Indication of any immediate medical attention and special treatment needed

Note to physicians
Aluminum soluble salts may cause gastroenteritis if ingested. Treatment includes the use of demulcents. Note: Consideration should be given to the possibility that overexposure to materials other than this product may have occurred.

5. FIRE-FIGHTING MEASURES

Extinguishing media

Suitable extinguishing media
Water Spray, Carbon Dioxide, Foam, Dry Chemical.

Extinguishing media which must not be used for safety reasons
No information available.

Special hazards arising from the substance or mixture

Special Hazard
May produce hazardous fumes or hazardous decomposition products.

Advice for firefighters

Firefighting measures
Product is a water solution and nonflammable. In a fire, this product may build up pressure and rupture a sealed container; cool exposed containers with water spray. Use self-contained breathing apparatus in confined areas; avoid breathing mist or spray.

Special protective equipment for firefighters
Full protective clothing and approved self-contained breathing apparatus required for firefighting personnel.

Explosion data

Sensitivity to Mechanical Impact
None.

Sensitivity to Static Discharge
None.

6. ACCIDENTAL RELEASE MEASURES

Personal precautions, protective equipment and emergency procedures

Personal precautions
Wear adequate personal protective clothing and equipment. Approved breathing apparatus may be necessary.

Environmental precautions

Environmental precautions
Do not allow liquid to enter streams or waterways.

Methods and material for containment and cleaning up

Methods for containment
Prevent further leakage or spillage if safe to do so. Build dikes as necessary to contain flow of large spills.

Methods for cleaning up
Clear spills immediately. For small spills, use soda ash or lime to neutralize, an inert material to absorb, or wash product to a chemical sewer. Place contaminated materials into containers and store in a safe place to await proper disposal. Caution: Use of soda ash or lime may generate carbon dioxide gas. Provide adequate ventilation to spill area.

7. HANDLING AND STORAGE

Precautions for safe handling

Advice on safe handling
Keep container closed when not in use
Keep away from heat and open flame.
Avoid contact with eyes, skin and clothing
Wear chemical splash goggles, gloves, and protective clothing when handling.
Wash thoroughly after handling
Avoid breathing vapor or mist
Use with adequate ventilation and employ respiratory protection where mist or spray may be generated.
FOR INDUSTRIAL USE ONLY.

Conditions for safe storage, including any incompatibilities

Technical measures and storage conditions
Keep container tightly closed when not in use.
Store in a cool, dry place away from direct heat.
Do not store in unlined metal containers.
Product may slowly corrode iron, brass, copper, aluminum, mild steel, and stainless steel.

Incompatible products
Alkalis.

8. EXPOSURE CONTROLS/PERSONAL PROTECTION

Control parameters

Exposure Guidelines
This product, as supplied, does not contain any hazardous materials with occupational exposure limits established by the region specific regulatory bodies

Appropriate engineering controls

Engineering controls
Local exhaust ventilation as necessary to maintain exposures to within applicable limits. Please refer to the ACGIH document, "Industrial Ventilation, A Manual of Recommended Practices", most recent edition, for details. If there are no applicable or established exposure limit requirements or guidelines, general ventilation should be sufficient.

Individual protection measures, such as personal protective equipment

Eye/face Protection
Wear chemical splash goggles and face shield (when eye and face contact is possible due to splashing or spraying of material).

Hand Protection
Appropriate chemical resistant gloves should be worn.

Skin and body protection
Standard work clothing and work shoes.

Respiratory protection
If exposures exceed the PEL or TLV, use NIOSH/MSHA approved respirator in accordance with OSHA Respiratory Protection Requirements under 29 CFR 1910.134. If there are no applicable or established exposure limit requirements or guidelines, general ventilation should be sufficient.

Other personal protection data
Eyewash fountains and safety showers must be easily accessible.

Hygiene measures
Handle in accordance with good industrial hygiene and safety practice.

9. PHYSICAL AND CHEMICAL PROPERTIES

Information on basic physical and chemical properties

Physical state	liquid
Color	Colorless to amber
Appearance	clear
Odor	No appreciable odor
Odor threshold	No information available

Property	**Values**	**Remarks / Method**
pH	3.5 - 4.5	as is
Melting / freezing point	No information available	No information available
Boiling point / boiling range	No information available	No information available
Flash point	Not applicable	No information available
Evaporation rate	No information available	No information available
Flammability (solid, gas)	Not applicable	No information available
Flammability Limit in Air		
Upper flammability limit	Not applicable	No information available
Lower flammability limit	Not applicable	No information available

Vapor pressure	No information available	No information available
Vapor density	No information available	No information available
Specific gravity	1.175 - 1.205	No information available
Solubility (water)	Soluble below pH 4	No information available
Solubility in other solvents	No information available	No information available
Partition coefficient: n-octanol/water	No information available	No information available
Autoignition temperature	Not applicable	No information available
Decomposition temperature	No information available	No information available
Kinematic viscosity	No information available	No information available
Dynamic viscosity	150 - 400 cps	No information available

Other information

Density	9.80 - 10.05 lb/gal
Bulk Density	No information available
Explosive properties	No information available.
Oxidizing properties	No information available
Softening point	No information available
Molecular weight	No information available
Volatile organic compounds (VOCs) content	No information available
Percent Volatile, wt.%	60 - 70 % (Water)

10. STABILITY AND REACTIVITY

Reactivity

Reactivity
No data available.

Chemical stability

Chemical stability
Stable under normal conditions of handling, use and transportation.

Possibility of hazardous reactions

Possibility of hazardous reactions
None under normal processing.

Hazardous polymerization
Not anticipated under normal or recommended handling and storage conditions.

Conditions to avoid

Conditions to avoid
None known

Incompatible materials

Materials to avoid
Alkalis.

Hazardous decomposition products

Hazardous decomposition products
Thermal decomposition may release toxic and/or hazardous gases such as aluminum, Cl_2, and HCl.

11. TOXICOLOGICAL INFORMATION

Information on likely routes of exposure

Eye contact
May cause moderate eye irritation that can become severe with prolonged contact. Prolonged exposure to Aluminum salts may cause conjunctivitis.

Skin contact
Prolonged and/or repeated contact may cause skin irritation.

Ingestion
May cause irritation of the mouth, throat and stomach. Ingestion may cause gastrointestinal irritation, nausea, vomiting and diarrhea.

Inhalation
Inhalation of mist or vapor may cause respiratory tract irritation.

Acute toxicity - Product Information

Oral LD50	No information available
Dermal LD50	No information available
Inhalation LC50	No information available

Acute toxicity - Component Information

Component	weight-%	Oral LD50	Dermal LD50	Inhalation LC50
Trade Secret Ingredient	25 - 35%	= 9187 mg/kg (Rat)	> 2000 mg/kg (Rat)	--

Information on toxicological effects

Symptoms
No information available.

Delayed and immediate effects as well as chronic effects from short and long-term exposure

Skin corrosion/irritation
Irritating to skin

Serious eye damage/eye irritation
Causes serious eye irritation

Sensitization
No information available

Germ cell mutagenicity
No information available

Carcinogenicity
This product does not contain any components in concentrations greater than or equal to 0.1% that are listed as known or suspected carcinogens by NTP, IARC, ACGIH, or OSHA.

Reproductive toxicity
No information available

Specific target organ toxicity - Single exposure
No information available.

Specific target organ toxicity - Repeated exposure
No information available

Aspiration hazard
No information available.

Numerical measures of toxicity - Product Information

The following values are calculated based on chapter 3.1 of the GHS document

ATEmix (oral)	16752 mg/kg
ATEmix (dermal)	7099 mg/kg

Other information
Data is based on a product of similar composition and conclusions are drawn from sources other than direct testing.

12. ECOLOGICAL INFORMATION

Ecotoxicity

• Harmful to aquatic life with long lasting effects

Acute aquatic toxicity - Product Information

Fish	No information available
Crustacea	No information available
Algae/aquatic plants	No information available

Acute aquatic toxicity - Component Information

Component	weight-%	Algae/aquatic plants	Fish	Toxicity to daphnia and other aquatic invertebrates
Trade Secret Ingredient	25 - 35%	--	LC50 (96 h static) 100 - 500 mg/L (Brachydanio rerio)	--

Persistence and degradability

Persistence and degradability
No information available

Bioaccumulative potential

Bioaccumulative potential
No information available.

Mobility

Mobility
No information available

Results of PBT and vPvB assessment

PBT and vPvB assessment
No information available

Other adverse effects

Other information
No other ecological studies have been carried out on this product.

13. DISPOSAL CONSIDERATIONS

Waste treatment methods

Disposal of wastes
Dispose of product in an approved chemical waste landfill or incinerate in accordance with applicable Federal, state and local regulations.

Contaminated packaging
Since empty containers retain product residue, follow label warnings even after container is emptied.

14. TRANSPORT INFORMATION

DOT

NOT APPLICABLE, NOT RESTRICTED.
This product is excepted from DOT regulations under 49 CFR 173.154(d) when shipped by road or railway. The product exception is referenced in 49 CFR 172.101 Table. Packaging material must not be aluminum, steel or be degraded by this product

ICAO/IATA

UN number	UN3264
Proper shipping name	Corrosive Liquid, Acidic, Inorganic, N.O.S. (Polyaluminum Chloride Solution)
Hazard class	8
Packing group	III
ERG Code	8L

IMDG

UN number	UN3264
Proper shipping name	Corrosive Liquid, Acidic, Inorganic, N.O.S. (Polyaluminum Chloride Solution)
Hazard class	8
Packing group	III
EmS	F-A; S-B

Harmonized Tariff Number 3824.90

15. REGULATORY INFORMATION

International Inventories

TSCA (United States)
All ingredients are on the inventory or exempt from listing

Australia (AICS)
All ingredients are on the inventory or exempt from listing

Canada (DSL)
All ingredients are on the inventory or exempt from listing

Canada (NDSL)
None of the ingredients are on the inventory.

China (IECSC)
All ingredients are on the inventory or exempt from listing

EINECS (European Inventory of Existing Chemical Substances)
All ingredients are on the inventory or exempt from listing

ELINCS (European List of Notified Chemical Substances)
None of the ingredients are on the inventory.

ENCS (Japan)
All ingredients are on the inventory or exempt from listing

South Korea (KECL)
All ingredients are on the inventory or exempt from listing

Philippines (PICCS)
All ingredients are on the inventory or exempt from listing

Legend

TSCA - United States Toxic Substances Control Act Section 8(b) Inventory
AICS - Australian Inventory of Chemical Substances
DSL/NDSL - Canadian Domestic Substances List/Non-Domestic Substances List
IECSC - China Inventory of Existing Chemical Substances
EINECS/ELINCS - European Inventory of Existing Commercial Chemical Substances/EU List of Notified Chemical Substances
ENCS - Japan Existing and New Chemical Substances
KECL - Korean Existing and Evaluated Chemical Substances
PICCS - Philippines Inventory of Chemicals and Chemical Substances

U.S. Federal Regulations

CERCLA
This material, as supplied, does not contain any substances regulated as hazardous substances under the Comprehensive Environmental Response Compensation and Liability Act (CERCLA) (40 CFR 302) or the Superfund Amendments and Reauthorization Act (SARA) (40 CFR 355). There may be specific reporting requirements at the local, regional, or state level pertaining to releases of this material.

CWA (Clean Water Act)
This product does not contain any substances regulated as pollutants pursuant to the Clean Water Act (40 CFR 122.21 and 40 CFR 122.42).

SARA 311/312 Hazard Categories

Acute health hazard	Yes
Chronic health hazard	No
Fire hazard	No
Sudden release of pressure hazard	No
Reactive hazard	No

SARA 313

Section 313 of Title III of the Superfund Amendments and Reauthorization Act of 1986 (SARA). This product does not contain any chemicals which are subject to the reporting requirements of the Act and Title 40 of the Code of Federal Regulations, Part 372.

U.S. State Regulations

California Proposition 65

This product does not contain any Proposition 65 chemicals.

U.S. State Right-to-Know Regulations

This product does not contain any substances regulated under applicable state right-to-know regulations

16. OTHER INFORMATION

NFPA Rating	Health - 1	Flammability - 0	Instability - 0	Special Hazard -
HMIS Rating	Health - 1	Flammability - 0	Physical hazard - 0	Personal protection - B

Product code	95030
Revision date	2015-09-03
Revision number	1

Disclaimer

The information provided in this Safety Data Sheet is correct to the best of our knowledge, information and belief at the date of its publication. The information given is designed only as a guidance for safe handling, use, processing, storage, transportation, disposal and release and is not to be considered a warranty or quality specification. The information relates only to the specific material designated and may not be valid for such material used in combination with any other materials or in any process, unless specified in the text.

End of Safety Data Sheet

SAFETY DATA SHEET

Revision Date 27-Mar-2015 **Version** 1

1. IDENTIFICATION

Product identifier
Product Name 133K ANTI-SEIZE LUBRICANT 8OZ

Other means of identification
Product Code 80078
Synonyms None

Recommended use of the chemical and restrictions on use
Recommended Use Lubricant
Uses advised against No information available

Details of the supplier of the safety data sheet

Manufacturer Address
ITW Permatex
10 Columbus Blvd.
Hartford, CT 06106 USA

Distributor
ITW Permatex Canada
35 Brownridge Road, Unit 1
Halton Hills, ON Canada L7G 0C6
Telephone: (800) 924-6994

Company Phone Number 1-87-Permatex
(877) 376-2839

24 Hour Emergency Phone Number Chem-Tel: 800-255-3924
International Emergency:
00+1+ 813-248-0585
Contract Number: MIS0003453

E-mail address mail@permatex.com

2. HAZARDS IDENTIFICATION

Classification

OSHA Regulatory Status
This chemical is considered hazardous by the 2012 OSHA Hazard Communication Standard (29 CFR 1910.1200)

Acute toxicity - Oral	Category 4

Label elements

Emergency Overview

Warning

Harmful if swallowed



Appearance Silver **Physical state** Paste **Odor** Mild petroleum odor

Precautionary Statements - Prevention
Wash face, hands and any exposed skin thoroughly after handling
Do not eat, drink or smoke when using this product

Precautionary Statements - Response
Get medical advice/attention if you feel unwell
IF SWALLOWED: Call a POISON CENTER or doctor/physician if you feel unwell
Rinse mouth

Precautionary Statements - Storage
Store in a well-ventilated place. Keep container tightly closed

Precautionary Statements - Disposal
Dispose of contents/container to an approved waste disposal plant

Hazards not otherwise classified (HNOC)
Not applicable

Other Information
The classification as a carcinogen need not apply if it can be shown that the substance contains less than 3 % DMSO extract as measured by IP 346. This note applies only to certain complex oil derived substances in Annex I
Harmful to aquatic life with long lasting effects

Unknown acute toxicity 19.23275% of the mixture consists of ingredient(s) of unknown toxicity

3. COMPOSITION/INFORMATION ON INGREDIENTS

substance

Chemical Name	CAS No	Weight-%	Trade Secret
DISTILLATES (PETROLEUM), HYDROTREATED HEAVY NAPHTHENIC	64742-52-5	30 - 60	*
CALCIUM OXIDE	1305-78-8	10 - 30	*
GRAPHITE	7782-42-5	10 - 30	*
ALUMINIUM POWDER	7429-90-5	5 - 10	*
MINERAL OIL	8042-47-5	3 - 7	*

*The exact percentage (concentration) of composition has been withheld as a trade secret.

4. FIRST AID MEASURES

Description of first aid measures

General advice Get medical advice/attention if you feel unwell.

Eye contact IF IN EYES: Rinse cautiously with water for several minutes. Remove contact lenses, if present and easy to do. Continue rinsing. If eye irritation persists: Get medical advice/attention.

Skin contact IF ON SKIN:. Wash skin with soap and water. If skin irritation persists, call a physician. Wash contaminated clothing before reuse.

Inhalation IF INHALED: Remove victim to fresh air and keep at rest in a position comfortable for breathing. If symptoms persist, call a physician.

Ingestion IF SWALLOWED. Do NOT induce vomiting. Never give anything by mouth to an unconscious person. Call a physician.

Self-protection of the first aider Use personal protective equipment as required. Avoid contact with skin, eyes or clothing.

Most important symptoms and effects, both acute and delayed

Symptoms See section 2 for more information.

Indication of any immediate medical attention and special treatment needed

Note to physicians Treat symptomatically.

5. FIRE-FIGHTING MEASURES

Suitable extinguishing media
Carbon dioxide (CO2), Dry chemical, Foam

Unsuitable extinguishing media
None.

Specific hazards arising from the chemical
None in particular.

Explosion data
Sensitivity to Mechanical Impact None.
Sensitivity to Static Discharge None.

Protective equipment and precautions for firefighters
As in any fire, wear self-contained breathing apparatus pressure-demand, MSHA/NIOSH (approved or equivalent) and full protective gear.

6. ACCIDENTAL RELEASE MEASURES

Personal precautions, protective equipment and emergency procedures

Personal precautions Ensure adequate ventilation, especially in confined areas. Avoid contact with eyes and skin. Use personal protective equipment as required.

Environmental precautions

Environmental precautions Do not flush into surface water or sanitary sewer system. See Section 12 for additional ecological information.

Methods and material for containment and cleaning up

Methods for containment Prevent further leakage or spillage if safe to do so.

Methods for cleaning up Ensure adequate ventilation. Soak up with inert absorbent material. Sweep up and shovel into suitable containers for disposal.

Prevention of secondary hazards Clean contaminated objects and areas thoroughly observing environmental regulations.

7. HANDLING AND STORAGE

Precautions for safe handling

Advice on safe handling Handle in accordance with good industrial hygiene and safety practice. Avoid breathing vapors or mists. Avoid contact with skin, eyes or clothing. Wash thoroughly after handling. Wash contaminated clothing before reuse. Use personal protective equipment as required.

Conditions for safe storage, including any incompatibilities

Storage Conditions Keep containers tightly closed in a dry, cool and well-ventilated place.

Incompatible materials Strong oxidizing agents, Acids, Alkali, Amines

8. EXPOSURE CONTROLS/PERSONAL PROTECTION

Control parameters

Exposure Guidelines .

Chemical Name	ACGIH TLV	OSHA PEL	NIOSH IDLH
CALCIUM OXIDE 1305-78-8	TWA: 2 mg/m³	TWA: 5 mg/m³ (vacated) TWA: 5 mg/m³ not in effect as a result of reconsideration	IDLH: 25 mg/m³ TWA: 2 mg/m³
GRAPHITE 7782-42-5	TWA: 2 mg/m³ respirable fraction all forms except graphite f bers	TWA: 15 mg/m³ total dust synthetic TWA: 5 mg/m³ respirable fraction synthetic (vacated) TWA: 2.5 mg/m³ respirable dust natural (vacated) TWA: 10 mg/m³ total dust synthetic (vacated) TWA: 5 mg/m³ respirable fraction synthetic TWA: 15 mppcf natural	IDLH: 1250 mg/m³ TWA: 2.5 mg/m³ natural respirable dust
ALUMINIUM POWDER 7429-90-5	TWA: 1 mg/m³ respirable fraction	TWA: 15 mg/m³ total dust TWA: 5 mg/m³ respirable fraction (vacated) TWA: 5 mg/m³ Al Aluminum	TWA: 5 mg/m³ Al

NIOSH IDLH Immediately Dangerous to Life or Health

Other Information Vacated limits revoked by the Court of Appeals decision in AFL-CIO v. OSHA, 965 F.2d 962 (11th Cir., 1992).

Appropriate engineering controls

Engineering Controls Showers
Eyewash stations
Ventilation systems

Individual protection measures, such as personal protective equipment

Eye/face protection Wear safety glasses with side shields (or goggles).

Skin and body protection Wear protective gloves and protective clothing.

Respiratory protection Use NIOSH-approved air-purifying respirator with organic vapor cartridge or canister, as appropriate.

General Hygiene Considerations Handle in accordance with good industrial hygiene and safety practice. Regular cleaning of equipment, work area and clothing is recommended.

9. PHYSICAL AND CHEMICAL PROPERTIES

Information on basic physical and chemical properties

Physical state Paste
Appearance Silver

Odor	Mild petroleum odor
Odor threshold	No information available

Property	**Values**	**Remarks • Method**
pH	No information available	
Melting point / freezing point	No information available	
Boiling point / boiling range	No information available Not determined	
Flash point	> 93 °C / > 200 °F	Tag Closed Cup
Evaporation rate	< 1	Butyl acetate = 1
Flammability (solid, gas)	No information available	
Flammability Limit in Air		
Upper flammability limit:	No information available	
Lower flammability limit:	No information available	
Vapor pressure	<5 mm Hg	
Vapor density	>1	Air = 1
Relative density	1.17	
Water solubility	Negligible	
Solubility in other solvents	No information available	
Partition coefficient	No information available	
Autoignition temperature	No information available	
Decomposition temperature	No information available	
Kinematic viscosity	No information available	
Dynamic viscosity	No information available	
Explosive properties	No information available	
Oxidizing properties	No information available	

Other Information

Softening point	No information available
Molecular weight	No information available
VOC Content (%)	0
Density	No information available
Bulk density	No information available

10. STABILITY AND REACTIVITY

Reactivity
No data available

Chemical stability
Stable under recommended storage conditions.

Possibility of Hazardous Reactions
None under normal processing.

Conditions to avoid
Excessive heat.

Incompatible materials
Strong oxidizing agents, Acids, Alkali, Amines

Hazardous Decomposition Products
Carbon oxides

11. TOXICOLOGICAL INFORMATION

Information on likely routes of exposure

Inhalation May cause irritation of respiratory tract.

Eye contact Contact with eyes may cause irritation. May cause redness and tearing of the eyes.

Skin contact May cause skin irritation and/or dermatitis.

Ingestion Harmful if swallowed.

Chemical Name	Oral LD50	Dermal LD50	Inhalation LC50
CALCIUM OXIDE 1305-78-8	= 500 mg/kg (Rat)	-	-
MINERAL OIL 8042-47-5	> 5000 mg/kg (Rat)	-	-

Information on toxicological effects

Symptoms No information available.

Delayed and immediate effects as well as chronic effects from short and long-term exposure

Sensitization No information available.
Germ cell mutagenicity No information available.
Carcinogenicity The table below indicates whether each agency has listed any ingredient as a carcinogen.

Chemical Name	ACGIH	IARC	NTP	OSHA
DISTILLATES (PETROLEUM), HYDROTREATED HEAVY NAPHTHENIC 64742-52-5	A2	Group 1	-	X

ACGIH (American Conference of Governmental Industrial Hygienists)
A2 - Suspected Human Carcinogen
IARC (International Agency for Research on Cancer)
Group 1 - Carcinogenic to Humans
Not classifiable as a human carcinogen
OSHA (Occupational Safety and Health Administration of the US Department of Labor)
X - Present

Target Organ Effects Central Vascular System (CVS), Eyes, Respiratory system, Skin.

The following values are calculated based on chapter 3.1 of the GHS document .
ATEmix (oral) 1978 mg/kg
ATEmix (inhalation-vapor) 32255 mg/l

12. ECOLOGICAL INFORMATION

Ecotoxicity

32.42995% of the mixture consists of components(s) of unknown hazards to the aquatic environment

Chemical Name	Algae/aquatic plants	Fish	Crustacea
DISTILLATES (PETROLEUM), HYDROTREATED HEAVY NAPHTHENIC 64742-52-5	-	5000: 96 h Oncorhynchus mykiss mg/L LC50	1000: 48 h Daphnia magna mg/L EC50
CALCIUM OXIDE 1305-78-8	-	1070: 96 h Cyprinus carpio mg/L LC50 static	-
MINERAL OIL 8042-47-5	-	10000: 96 h Lepomis macrochirus mg/L LC50	-

Persistence and degradability
No information available.

Bioaccumulation
No information available.

Mobility
No information available.

Chemical Name	Partition coefficient

MINERAL OIL 8042-47-5	>6

Other adverse effects
No information available

13. DISPOSAL CONSIDERATIONS

Waste treatment methods

Disposal of wastes Disposal should be in accordance with applicable regional, national and local laws and regulations.

Contaminated packaging Do not reuse container.

US EPA Waste Number Not applicable

This product contains one or more substances that are listed with the State of California as a hazardous waste.

Chemical Name	California Hazardous Waste Status
CALCIUM OXIDE 1305-78-8	Corrosive
ALUMINIUM POWDER 7429-90-5	Ignitable powder

14. TRANSPORT INFORMATION

DOT
Proper shipping name: Not regulated

IATA
Proper shipping name: Not regulated

IMDG
Proper shipping name: Not regulated

15. REGULATORY INFORMATION

International Inventories

TSCA	Complies
DSL/NDSL	Complies
EINECS/ELINCS	Complies
ENCS	Natural substance
IECSC	Complies
KECL	Complies
PICCS	Complies
AICS	Complies

Legend:
TSCA - United States Toxic Substances Control Act Section 8(b) Inventory
DSL/NDSL - Canadian Domestic Substances List/Non-Domestic Substances List
EINECS/ELINCS - European Inventory of Existing Chemical Substances/European List of Notified Chemical Substances
ENCS - Japan Existing and New Chemical Substances
IECSC - China Inventory of Existing Chemical Substances
KECL - Korean Existing and Evaluated Chemical Substances
PICCS - Philippines Inventory of Chemicals and Chemical Substances
AICS - Australian Inventory of Chemical Substances

US Federal Regulations

SARA 313

Section 313 of Title III of the Superfund Amendments and Reauthorization Act of 1986 (SARA). This product contains a chemical or chemicals which are subject to the reporting requirements of the Act and Title 40 of the Code of Federal Regulations, Part 372

Chemical Name	SARA 313 - Threshold Values %
ALUMINIUM POWDER - 7429-90-5	1.0

SARA 311/312 Hazard Categories

Acute health hazard	Yes
Chronic Health Hazard	No
Fire hazard	No
Sudden release of pressure hazard	No
Reactive Hazard	No

CWA (Clean Water Act)

This product contains the following substances which are regulated pollutants pursuant to the Clean Water Act (40 CFR 122.21 and 40 CFR 122.42)

CERCLA

This material, as supplied, contains one or more substances regulated as a hazardous substance under the Comprehensive Environmental Response Compensation and Liability Act (CERCLA) (40 CFR 302)

US State Regulations

California Proposition 65

This product does not contain any Proposition 65 chemicals

U.S. State Right-to-Know Regulations

Chemical Name	New Jersey	Massachusetts	Pennsylvania
CALCIUM OXIDE 1305-78-8	X	X	X
GRAPHITE 7782-42-5	X	X	X
ALUMINIUM POWDER 7429-90-5	X	X	X
MINERAL OIL 8012-95-1	X	X	X
COPPER 7440-50-8	X	X	X

U.S. EPA Label Information

EPA Pesticide Registration Number Not applicable

NFPA	**Health hazards** 1	**Flammability** 1	**Instability** 0	-
HMIS	**Health hazards** 1	**Flammability** 1	**Physical hazards** 0	**Personal protection** B

NFPA (National Fire Protection Association)
HMIS (Hazardous Material Information System)

Revision Date 27-Mar-2015

Disclaimer

The information provided in this Material Safety Data Sheet is correct to the best of our knowledge, information and belief at the date of its publication. The information given is designed only as a guidance for safe handling, use, processing, storage, transportation, disposal and release and is not to be considered a warranty or quality specification. The information relates only to the specific material designated and may not be valid for such material used in combination with any other materials or in any process, unless specified in the text.

End of Safety Data Sheet

SAFETY DATA SHEET

THE DOW CHEMICAL COMPANY

Product name: AQUCAR™ GA 15 Water Treatment Microbiocide **Issue Date:** 03/18/2015
Print Date: 03/18/2015

THE DOW CHEMICAL COMPANY encourages and expects you to read and understand the entire (M)SDS, as there is important information throughout the document. We expect you to follow the precautions identified in this document unless your use conditions would necessitate other appropriate methods or actions.

1. IDENTIFICATION

Product name: AQUCAR™ GA 15 Water Treatment Microbiocide

Recommended use of the chemical and restrictions on use
Identified uses: For biocidal applications. For industrial use only.

COMPANY IDENTIFICATION
THE DOW CHEMICAL COMPANY
2030 WILLARD H DOW CENTER
MIDLAND MI 48674-0000
UNITED STATES

Customer Information Number: 800-258-2436
SDSQuestion@dow.com

EMERGENCY TELEPHONE NUMBER
24-Hour Emergency Contact: 800-424-9300
Local Emergency Contact: 989-636-4400

2. HAZARDS IDENTIFICATION

Hazard classification
This material is hazardous under the criteria of the Federal OSHA Hazard Communication Standard 29CFR 1910.1200.
Acute toxicity - Category 4 - Oral
Acute toxicity - Category 3 - Inhalation
Skin corrosion - Category 1B
Serious eye damage - Category 1
Respiratory sensitisation - Category 1
Skin sensitisation - Category 1
Specific target organ toxicity - single exposure - Category 3

Label elements
Hazard pictograms

® ™ Trademark of The Dow Chemical Company ("Dow") or an affiliated company of Dow



Signal word: **DANGER!**

Hazards
Harmful if swallowed.
Causes severe skin burns and eye damage.
May cause an allergic skin reaction.
Toxic if inhaled.
May cause allergy or asthma symptoms or breathing difficulties if inhaled.
May cause respiratory irritation.

Precautionary statements

Prevention
Avoid breathing dust/ fume/ gas/ mist/ vapours/ spray.
Wash skin thoroughly after handling.
Do not eat, drink or smoke when using this product.
Use only outdoors or in a well-ventilated area.
Contaminated work clothing should not be allowed out of the workplace.
Wear protective gloves/ protective clothing/ eye protection/ face protection.
In case of inadequate ventilation wear respiratory protection.

Response
IF SWALLOWED: Call a POISON CENTER or doctor/ physician if you feel unwell. Rinse mouth.
IF SWALLOWED: Rinse mouth. Do NOT induce vomiting.
IF ON SKIN (or hair): Remove/ Take off immediately all contaminated clothing. Rinse skin with water/ shower.
IF INHALED: Remove victim to fresh air and keep at rest in a position comfortable for breathing. Immediately call a POISON CENTER or doctor/ physician.
IF IN EYES: Rinse cautiously with water for several minutes. Remove contact lenses, if present and easy to do. Continue rinsing. Immediately call a POISON CENTER or doctor/ physician.
If skin irritation or rash occurs: Get medical advice/ attention.
If experiencing respiratory symptoms: Call a POISON CENTER or doctor/ physician.
Wash contaminated clothing before reuse.

Storage
Store in a well-ventilated place. Keep container tightly closed.
Store locked up.

Disposal
Dispose of contents/ container to an approved waste disposal plant.

Other hazards
no data available

3. COMPOSITION/INFORMATION ON INGREDIENTS

Chemical nature: aldehyde
This product is a mixture.

Component	CASRN	Concentration
Glutaraldehyde	111-30-8	15.0%
Water	7732-18-5	<= 85.0 %

4. FIRST AID MEASURES

Description of first aid measures
General advice: First Aid responders should pay attention to self-protection and use the recommended protective clothing (chemical resistant gloves, splash protection). If potential for exposure exists refer to Section 8 for specific personal protective equipment.

Inhalation: Move person to fresh air. If person is not breathing, call an emergency responder or ambulance, then give artificial respiration; if by mouth to mouth use rescuer protection (pocket mask etc). Call a poison control center or doctor for treatment advice. If breathing is difficult, oxygen should be administered by qualified personnel.

Skin contact: Take off contaminated clothing. Wash skin with soap and plenty of water for 15-20 minutes. Call a poison control center or doctor for treatment advice. Wash clothing before reuse. Shoes and other leather items which cannot be decontaminated should be disposed of properly. Suitable emergency safety shower facility should be immediately available.

Eye contact: Wash immediately and continuously with flowing water for at least 30 minutes. Remove contact lenses after the first 5 minutes and continue washing. Obtain prompt medical consultation, preferably from an ophthalmologist. Suitable emergency eye wash facility should be immediately available.

Ingestion: If the person is fully alert and cooperative, have the person rinse mouth with plenty of water. In cases of ingestion have the person drink 4 to 10 ounces (120-300 mL) of water. Do not induce vomiting. Do not attempt mouth rinse if the person has respiratory distress, altered mental status, or nausea and vomiting. Call a physician and/or transport to emergency facility immediately.

Most important symptoms and effects, both acute and delayed: Aside from the information found under Description of first aid measures (above) and Indication of immediate medical attention and special treatment needed (below), any additional important symptoms and effects are described in Section 11: Toxicology Information.

Indication of any immediate medical attention and special treatment needed
Notes to physician: Maintain adequate ventilation and oxygenation of the patient. May cause respiratory sensitization or asthma-like symptoms. Bronchodilators, expectorants and antitussives may be of help. Glutaraldehyde may transiently worsen reversible airways obstruction including asthma or reactive airways disease. Treat bronchospasm with inhaled beta2 agonist and oral or parenteral corticosteroids. Respiratory symptoms, including pulmonary edema, may be delayed. Persons receiving significant exposure should be observed 24-48 hours for signs of respiratory

distress. Inhalation of vapors may result in skin sensitization. In sensitized individuals, reexposure to very small amounts of vapor, mist, or liquid may cause a severe allergic skin reaction. Chemical eye burns may require extended irrigation. Obtain prompt consultation, preferably from an ophthalmologist. If burn is present, treat as any thermal burn, after decontamination. Due to irritant properties, swallowing may result in burns/ulceration of mouth, stomach and lower gastrointestinal tract with subsequent stricture. Aspiration of vomitus may cause lung injury. Suggest endotracheal/esophageal control if lavage is done. Probable mucosal damage may contraindicate the use of gastric lavage. No specific antidote. Treatment of exposure should be directed at the control of symptoms and the clinical condition of the patient. Have the Safety Data Sheet, and if available, the product container or label with you when calling a poison control center or doctor, or going for treatment. Excessive exposure may aggravate preexisting asthma and other respiratory disorders (e.g. emphysema, bronchitis, reactive airways dysfunction syndrome).

5. FIREFIGHTING MEASURES

Suitable extinguishing media: To extinguish combustible residues of this product use water fog, carbon dioxide, dry chemical or foam.

Unsuitable extinguishing media: None known.

Special hazards arising from the substance or mixture
Hazardous combustion products: Under fire conditions some components of this product may decompose. The smoke may contain unidentified toxic and/or irritating compounds. Combustion products may include and are not limited to: Carbon monoxide. Carbon dioxide.

Unusual Fire and Explosion Hazards: This material will not burn until the water has evaporated. Residue can burn.

Advice for firefighters
Fire Fighting Procedures: Keep people away. Isolate fire and deny unnecessary entry. To extinguish combustible residues of this product use water fog, carbon dioxide, dry chemical or foam. Contain fire water run-off if possible. Fire water run-off, if not contained, may cause environmental damage. Review the "Accidental Release Measures" and the "Ecological Information" sections of this (M)SDS.

Special protective equipment for firefighters: Wear positive-pressure self-contained breathing apparatus (SCBA) and protective fire fighting clothing (includes fire fighting helmet, coat, trousers, boots, and gloves). Avoid contact with this material during fire fighting operations. If contact is likely, change to full chemical resistant fire fighting clothing with self-contained breathing apparatus. If this is not available, wear full chemical resistant clothing with self-contained breathing apparatus and fight fire from a remote location. For protective equipment in post-fire or non-fire clean-up situations, refer to the relevant sections.

6. ACCIDENTAL RELEASE MEASURES

Personal precautions, protective equipment and emergency procedures: Evacuate area. Keep upwind of spill. Ventilate area of leak or spill. Only trained and properly protected personnel must be involved in clean-up operations. Refer to section 7, Handling, for additional precautionary measures. Use appropriate safety equipment. For additional information, refer to Section 8, Exposure Controls and Personal Protection.

Environmental precautions: Prevent from entering into soil, ditches, sewers, waterways and/or groundwater. See Section 12, Ecological Information. Spills or discharge to natural waterways is likely to kill aquatic organisms.

Methods and materials for containment and cleaning up: Avoid making contact with spilled material, glutaraldehyde will be absorbed by most shoes. Always wear the correct protective equipment, consisting of splashproof monogoggles, or both safety glasses with side shields and a wraparound full-face shield, appropriate gloves and protective clothing. A self-contained breathing apparatus or respirator and absorbents may be necessary, depending on the size of the spill and the adequacy of ventilation. Small spills: Wear the correct protective equipment and cover the liquid with absorbent material. Collect and seal the material and the dirt that has absorbed the spilled material in polyethylene bags and place in a drum for transit to an approved disposal site. Rinse away the remaining spilled material with water to reduce odor, and discharge the rinsate into a municipal or industrial sewer. Large spills: In case of nasal and respiratory irritation, vacate the room immediately. Personnel cleaning up should be trained and equipped with a self-contained breathing apparatus, or an officially approved or certified full-face respirator equipped with an organic vapor cartridge, gloves, and clothing impervious to glutaraldehyde, including rubber boots or shoe protection. Deactivate with sodium bisulfite (2-3 parts (by weight) per part of active substance glutaraldehyde), collect the neutralized liquid and place in a drum for transit to an approved disposal site.

7. HANDLING AND STORAGE

Precautions for safe handling: Do not spray or aerosolize the undiluted form of the product. Full personal protective equipment (including skin covering and full-face SCBA respirator) is required for dilutions or mixtures of the product used in a spray application.

Keep out of reach of children. Do not get in eyes, on skin, on clothing. Do not swallow. Avoid prolonged or repeated contact with skin. Avoid breathing vapor. Keep container closed. Use with adequate ventilation. Wear goggles, protective clothing and butyl or nitrile gloves. Wash thoroughly with soap and water after handling. Remove contaminated clothing and wash before reuse. See Section 8, EXPOSURE CONTROLS AND PERSONAL PROTECTION.

Conditions for safe storage: Do not store in: Aluminum. Carbon steel. Copper. Mild steel. Iron.

Storage stability
Shelf life: Use within 18 Month

8. EXPOSURE CONTROLS/PERSONAL PROTECTION

Control parameters
Exposure limits are listed below, if they exist.

Component	Regulation	Type of listing	Value/Notation
Glutaraldehyde	ACGIH	C	0.05 ppm
	ACGIH	C	DSEN, RSEN

Exposure controls
Engineering controls: Use engineering controls to maintain airborne level below exposure limit requirements or guidelines. If there are no applicable exposure limit requirements or guidelines, use only with adequate ventilation. Local exhaust ventilation may be necessary for some operations.

Individual protection measures

Eye/face protection: Use chemical goggles. If exposure causes eye discomfort, use a full-face respirator. Use a full-face respirator when material is heated or when aerosols/mists are generated. Eye wash fountain should be located in immediate work area.

Skin protection

Hand protection: Use gloves chemically resistant to this material. Examples of preferred glove barrier materials include: Butyl rubber. Examples of acceptable glove barrier materials include: Nitrile/butadiene rubber ("nitrile" or "NBR"). NOTICE: The selection of a specific glove for a particular application and duration of use in a workplace should also take into account all relevant workplace factors such as, but not limited to: Other chemicals which may be handled, physical requirements (cut/puncture protection, dexterity, thermal protection), potential body reactions to glove materials, as well as the instructions/specifications provided by the glove supplier.

Other protection: Use protective clothing chemically resistant to this material. Selection of specific items such as face shield, boots, apron, or full body suit will depend on the task. Safety shower should be located in immediate work area. Use chemical protective clothing resistant to this material, when there is any possibility of skin contact. Remove contaminated clothing immediately, wash skin area with soap and water, and launder clothing before reuse or dispose of properly. Items which cannot be decontaminated, such as shoes, belts and watchbands, should be removed and disposed of properly.

Respiratory protection: Atmospheric levels should be maintained below the exposure guideline. When respiratory protection is required for certain operations, use an approved air-purifying respirator. This product is a respiratory irritant. If discomfort is experienced ventilation is not adequate and an approved full face air-purifying respirator is recommended. If vapors are strong enough to be irritating to the nose, or eyes, the OEL is probably being exceeded. Special ventilation or respiratory protection may be required. For operations such as spraying and other conditions such as emergencies where the exposure guideline may be greatly exceeded, use an approved positive-pressure self-contained breathing apparatus. For emergency response or for situations where the atmospheric level is unknown, use an approved positive-pressure self-contained breathing apparatus or positive-pressure air line with auxiliary self-contained air supply.

The following should be effective types of air-purifying respirators: Full-face Organic vapor cartridge with a particulate pre-filter.

9. PHYSICAL AND CHEMICAL PROPERTIES

Appearance	
Physical state	Liquid.
Color	Clear
Odor	Fruity
Odor Threshold	< 1 ppb *Literature*
pH	3.1 - 4.5 *ASTM E70*
Melting point/range	Not applicable to liquids
Freezing point	-7 °C (19 °F) *OECD Test Guideline 102*
Boiling point (760 mmHg)	100.7 °C (213.3 °F) *OECD Test Guideline 103*
Flash point	**closed cup** *ASTM D 56* None
Evaporation Rate (Butyl Acetate = 1)	0.8 *Calculated.*

Flammability (solid, gas)	Not applicable to liquids
Lower explosion limit	No test data available
Upper explosion limit	No test data available
Vapor Pressure	0.3 mmHg at 20 °C (68 °F) *OECD Test Guideline 104* Active ingredient
Relative Vapor Density (air = 1)	0.7 *Calculated.*
Relative Density (water = 1)	1.042 at 20 °C (68 °F) *OECD 109*
Water solubility	100 % at 20 °C (68 °F) *Calculated.*
Partition coefficient: n-octanol/water	no data available
Auto-ignition temperature	No test data available
Decomposition temperature	No test data available
Kinematic Viscosity	No test data available
Explosive properties	Not explosive
Oxidizing properties	No
Molecular weight	No test data available

NOTE: The physical data presented above are typical values and should not be construed as a specification.

10. STABILITY AND REACTIVITY

Reactivity: no data available

Chemical stability: Thermally stable at typical use temperatures.

Possibility of hazardous reactions: Polymerization will not occur.

Conditions to avoid: Active ingredient decomposes at elevated temperatures.

Incompatible materials: Avoid contact with: Amines. Ammonia. Strong acids. Strong bases. Strong oxidizers. Avoid contact with metals such as: Aluminum. Carbon steel. Copper. Iron. Mild steel.

Hazardous decomposition products: Decomposition products depend upon temperature, air supply and the presence of other materials.

11. TOXICOLOGICAL INFORMATION

Toxicological information on this product or its components appear in this section when such data is available.

Acute toxicity

Acute oral toxicity

Low toxicity if swallowed. Swallowing may result in irritation or burns of the mouth, throat, and gastrointestinal tract. Swallowing may result in gastrointestinal irritation or ulceration. Excessive exposure may cause: Headache. Dizziness. Anesthetic effects. Drowsiness. Unconsciousness. Other central nervous system effects.

Single dose oral LD50 has not been determined. Typical for this family of materials.
LD50, Rat, > 900 mg/kg

Acute dermal toxicity
Prolonged skin contact is unlikely to result in absorption of harmful amounts.

The dermal LD50 has not been determined. Typical for this family of materials.
LD50, Rabbit, > 16,000 mg/kg

Acute inhalation toxicity
Vapor from heated material or mist may cause serious adverse effects, even death. Vapor may cause severe irritation of the upper respiratory tract (nose and throat). Case reports and medical surveys link asthma and respiratory irritation to glutaraldehyde exposure, primarily in medical personnel. Asthma-like symptoms may include coughing, difficult breathing and a feeling of tightness in the chest. Occasionally, breathing difficulties may be life threatening. Asthma-like symptoms may occur in people prone to respiratory disorders or other allergies.
As product: The LC50 has not been determined.

Skin corrosion/irritation
Brief contact may cause skin burns. Symptoms may include pain, severe local redness and tissue damage.

Serious eye damage/eye irritation
May cause severe irritation with corneal injury which may result in permanent impairment of vision, even blindness. Chemical burns may occur.
Vapor may cause eye irritation experienced as mild discomfort and redness.

Sensitization
Skin contact may cause an allergic skin reaction in a small proportion of individuals.
Contains component(s) which have caused allergic skin sensitization in guinea pigs.
Contains component(s) which have demonstrated the potential for contact allergy in mice.

May cause allergic respiratory response in a small proportion of individuals.

Specific Target Organ Systemic Toxicity (Single Exposure)
May cause respiratory irritation.
Route of Exposure: Inhalation
Target Organs: Respiratory Tract

Specific Target Organ Systemic Toxicity (Repeated Exposure)
Repeated skin contact may result in absorption of amounts which could cause death.
May cause nausea and vomiting.

Carcinogenicity
In a NTP chronic 2-year inhalation study on glutaraldehyde, no carcinogenicity was seen in rats or in mice. An increase in large granular lymphocytes in Fischer rats dosed with glutaraldehyde for two years was random or a secondary carcinogenic effect due to a modifying influence on the occurrence of this common neoplasm in this rat strain.

Teratogenicity
For glutaraldehyde: Has been toxic to the fetus in laboratory animals at doses toxic to the mother. Did not cause birth defects in laboratory animals.

Reproductive toxicity
For glutaraldehyde: In animal studies, did not interfere with reproduction.

Mutagenicity
For glutaraldehyde: In vitro genetic toxicity studies were negative in some cases and positive in other cases. Animal genetic toxicity studies were predominantly negative.

Aspiration Hazard
Aspiration into the lungs may occur during ingestion or vomiting, causing tissue damage or lung injury.

COMPONENTS INFLUENCING TOXICOLOGY:

Glutaraldehyde

Acute inhalation toxicity
LC50, Rat, female, 4 Hour, dust/mist, 0.28 mg/l

LC50, Rat, male, 4 Hour, dust/mist, 0.35 mg/l

12. ECOLOGICAL INFORMATION

Ecotoxicological information on this product or its components appear in this section when such data is available.

Toxicity

Glutaraldehyde

Acute toxicity to fish
Material is highly toxic to aquatic organisms on an acute basis (LC50/EC50 between 0.1 and 1 mg/L in the most sensitive species tested).
LC50, Cyprinodon variegatus (sheepshead minnow), 96 Hour, 32 mg/l

Acute toxicity to aquatic invertebrates
LC50, copepod Acartia tonsa, semi-static test, 48 Hour, 3 mg/l

Acute toxicity to algae/aquatic plants
ErC50, Desmodesmus subspicatus (Scenedesmus subspicatus), 72 Hour, 0.6 mg/l
NOEC, Desmodesmus subspicatus (Scenedesmus subspicatus), 72 Hour, Growth rate inhibition, 0.025 mg/l

Toxicity to bacteria
EC50, activated sludge, > 50 mg/l, OECD 209 Test

Chronic toxicity to aquatic invertebrates
NOEC, water flea Daphnia magna, flow-through test, 21 d, number of offspring, 0.12 mg/l

Toxicity to Above Ground Organisms
Material is moderately toxic to birds on an acute basis (LD50 between 51 and 500 mg/kg).

Material is practically non-toxic to birds on a dietary basis (LC50 > 5000 ppm).
oral LD50, Anas platyrhynchos (Mallard duck), 408 - 466 mg/kg
dietary LC50, Colinus virginianus (Bobwhite quail), > 5,000 ppm
dietary LC50, Anas platyrhynchos (Mallard duck), > 5,000 ppm

Persistence and degradability

Glutaraldehyde

Biodegradability: 10-day Window: Pass
Biodegradation: 73 %
Exposure time: 9 d
Method: OECD Test Guideline 301A or Equivalent

Theoretical Oxygen Demand: 1.92 mg/mg

Biological oxygen demand (BOD)

Incubation Time	BOD
5 d	28 %
10 d	57 - 63 %

Photodegradation
Test Type: Half-life (indirect photolysis)
Sensitizer: OH radicals
Atmospheric half-life: 2.74 Hour
Method: Estimated.

Bioaccumulative potential

Glutaraldehyde

Bioaccumulation: Bioconcentration potential is low (BCF < 100 or Log Pow < 3).
Partition coefficient: n-octanol/water(log Pow): -0.333 Measured

Mobility in soil

Glutaraldehyde

Potential for mobility in soil is high (Koc between 50 and 150).
Given its very low Henry's constant, volatilization from natural bodies of water or moist soil is not expected to be an important fate process.
Partition coefficient(Koc): 120 - 500 Estimated.

13. DISPOSAL CONSIDERATIONS

Disposal methods: DO NOT DUMP INTO ANY SEWERS, ON THE GROUND, OR INTO ANY BODY OF WATER. All disposal practices must be in compliance with all Federal, State/Provincial and local laws and regulations. Regulations may vary in different locations. Waste characterizations and compliance with applicable laws are the responsibility solely of the waste generator. AS YOUR SUPPLIER, WE HAVE NO CONTROL OVER THE MANAGEMENT PRACTICES OR MANUFACTURING PROCESSES OF PARTIES HANDLING OR USING THIS MATERIAL. THE INFORMATION PRESENTED HERE PERTAINS ONLY TO THE PRODUCT AS SHIPPED IN ITS

INTENDED CONDITION AS DESCRIBED IN MSDS SECTION: Composition Information. FOR UNUSED & UNCONTAMINATED PRODUCT, the preferred options include sending to a licensed, permitted: Incinerator or other thermal destruction device.

14. TRANSPORT INFORMATION

DOT

Proper shipping name	Corrosive liquid, acidic, organic, n.o.s.(Glutaraldehyde)
UN number	UN 3265
Class	8
Packing group	III

Classification for SEA transport (IMO-IMDG):

Proper shipping name	CORROSIVE LIQUID, ACIDIC, ORGANIC, N.O.S.(Glutaraldehyde)
UN number	UN 3265
Class	8
Packing group	III
Marine pollutant	No
Transport in bulk according to Annex I or II of MARPOL 73/78 and the IBC or IGC Code	Consult IMO regulations before transporting ocean bulk

Classification for AIR transport (IATA/ICAO):

Proper shipping name	Corrosive liquid, acidic, organic, n.o.s.(Glutaraldehyde)
UN number	UN 3265
Class	8
Packing group	III

This information is not intended to convey all specific regulatory or operational requirements/information relating to this product. Transportation classifications may vary by container volume and may be influenced by regional or country variations in regulations. Additional transportation system information can be obtained through an authorized sales or customer service representative. It is the responsibility of the transporting organization to follow all applicable laws, regulations and rules relating to the transportation of the material.

15. REGULATORY INFORMATION

OSHA Hazard Communication Standard
This product is a "Hazardous Chemical" as defined by the OSHA Hazard Communication Standard, 29 CFR 1910.1200.

Superfund Amendments and Reauthorization Act of 1986 Title III (Emergency Planning and Community Right-to-Know Act of 1986) Sections 311 and 312
Acute Health Hazard

Superfund Amendments and Reauthorization Act of 1986 Title III (Emergency Planning and Community Right-to-Know Act of 1986) Section 313
This material does not contain any chemical components with known CAS numbers that exceed the threshold (De Minimis) reporting levels established by SARA Title III, Section 313.

Pennsylvania Worker and Community Right-To-Know Act:
The following chemicals are listed because of the additional requirements of Pennsylvania law:

Components	**CASRN**
Glutaraldehyde	111-30-8

California Proposition 65 (Safe Drinking Water and Toxic Enforcement Act of 1986)
This product contains no listed substances knownto the State of California to cause cancer, birth defects or other reproductive harm, at levels which would require a warning under the statute.

United States TSCA Inventory (TSCA)
This product contains chemical substance(s) exempt from U.S. EPA TSCA Inventory requirements. It is regulated as a pesticide subject to Federal Insecticide, Fungicide, and Rodenticide Act (FIFRA) requirements.

Federal Insecticide, Fungicide and Rodenticide Act
EPA Registration Number: 464-693
This chemical is a pesticide product registered by the Environmental Protection Agency and is subject to certain labeling requirements under federal pesticide law. These requirements differ from the classification criteria and hazard information required for safety data sheets, and for workplace labels of non-pesticide chemicals. Following is the hazard information as required on the pesticide label:

DANGER

Corrosive
Causes irreversible eye damage
Causes skin irritation
Harmful if inhaled
Harmful if swallowed
Harmful if absorbed through skin
Prolonged or frequently repeated skin contact may cause allergic reactions in some individuals.
Causes asthmatic signs and symptoms in hyper-reactive individuals.
This pesticide is toxic to fish.

16. OTHER INFORMATION

Revision
Identification Number: 101225949 / A001 / Issue Date: 03/18/2015 / Version: 6.1
Most recent revision(s) are noted by the bold, double bars in left-hand margin throughout this document.

Legend

ACGIH	USA. ACGIH Threshold Limit Values (TLV)
C	Ceiling limit
DSEN, RSEN	Skin and respiratory sensitizer

Information Source and References
This SDS is prepared by Product Regulatory Services and Hazard Communications Groups from information supplied by internal references within our company.

THE DOW CHEMICAL COMPANY urges each customer or recipient of this (M)SDS to study it carefully and consult appropriate expertise, as necessary or appropriate, to become aware of and understand the data contained in this (M)SDS and any hazards associated with the product. The information herein is provided in good faith and believed to be accurate as of the effective date shown above. However, no warranty, express or implied, is given. Regulatory requirements are subject to change and may differ between various locations. It is the buyer's/user's responsibility to ensure that his activities comply with all federal, state, provincial or local laws. The information presented here pertains only to the product as shipped. Since conditions for use of the product are not under the control of the manufacturer, it is the buyer's/user's duty to determine the conditions necessary for the safe use of this product. Due to the proliferation of sources for information such as manufacturer-specific (M)SDSs, we are not and cannot be responsible for (M)SDSs obtained from any source other than ourselves. If you have obtained an (M)SDS from another source or if you are not sure that the (M)SDS you have is current, please contact us for the most current version.

SAFETY DATA SHEET

THE DOW CHEMICAL COMPANY

Product name: AQUCAR™ GA 45 Water Treatment Microbiocide **Issue Date:** 03/16/2015
Print Date: 04/23/2015

THE DOW CHEMICAL COMPANY encourages and expects you to read and understand the entire (M)SDS, as there is important information throughout the document. We expect you to follow the precautions identified in this document unless your use conditions would necessitate other appropriate methods or actions.

1. IDENTIFICATION

Product name: AQUCAR™ GA 45 Water Treatment Microbiocide

Recommended use of the chemical and restrictions on use
Identified uses: For biocidal applications. For industrial use only.

COMPANY IDENTIFICATION
THE DOW CHEMICAL COMPANY
2030 WILLARD H DOW CENTER
MIDLAND MI 48674-0000
UNITED STATES

Customer Information Number: 800-258-2436
SDSQuestion@dow.com

EMERGENCY TELEPHONE NUMBER
24-Hour Emergency Contact: 800-424-9300
Local Emergency Contact: 800-424-9300

2. HAZARDS IDENTIFICATION

Hazard classification
This material is hazardous under the criteria of the Federal OSHA Hazard Communication Standard 29CFR 1910.1200.
Acute toxicity - Category 3 - Oral
Acute toxicity - Category 2 - Inhalation
Skin corrosion - Category 1B
Serious eye damage - Category 1
Respiratory sensitisation - Category 1
Skin sensitisation - Category 1
Specific target organ toxicity - single exposure - Category 3

Label elements
Hazard pictograms

® ™ Trademark of The Dow Chemical Company ("Dow") or an affiliated company of Dow



Signal word: **DANGER!**

Hazards
Toxic if swallowed.
Causes severe skin burns and eye damage.
May cause an allergic skin reaction.
Fatal if inhaled.
May cause allergy or asthma symptoms or breathing difficulties if inhaled.
May cause respiratory irritation.

Precautionary statements

Prevention
Do not breathe dust/ fume/ gas/ mist/ vapours/ spray.
Wash skin thoroughly after handling.
Do not eat, drink or smoke when using this product.
Use only outdoors or in a well-ventilated area.
Contaminated work clothing should not be allowed out of the workplace.
Wear protective gloves/ protective clothing/ eye protection/ face protection.
Wear respiratory protection.

Response
IF SWALLOWED: Immediately call a POISON CENTER or doctor/ physician. Rinse mouth.
IF SWALLOWED: Rinse mouth. Do NOT induce vomiting.
IF ON SKIN (or hair): Remove/ Take off immediately all contaminated clothing. Rinse skin with water/ shower.
IF INHALED: Remove victim to fresh air and keep at rest in a position comfortable for breathing. Immediately call a POISON CENTER or doctor/ physician.
IF IN EYES: Rinse cautiously with water for several minutes. Remove contact lenses, if present and easy to do. Continue rinsing. Immediately call a POISON CENTER or doctor/ physician.
If skin irritation or rash occurs: Get medical advice/ attention.
If experiencing respiratory symptoms: Call a POISON CENTER or doctor/ physician.
Wash contaminated clothing before reuse.

Storage
Store in a well-ventilated place. Keep container tightly closed.
Store locked up.

Disposal
Dispose of contents/ container to an approved waste disposal plant.

Other hazards
no data available

3. COMPOSITION/INFORMATION ON INGREDIENTS

Chemical nature: Biocidal product
This product is a mixture.

Component	CASRN	Concentration
Glutaraldehyde	111-30-8	45.0%
Water	7732-18-5	<= 55.0 %

4. FIRST AID MEASURES

Description of first aid measures
General advice: First Aid responders should pay attention to self-protection and use the recommended protective clothing (chemical resistant gloves, splash protection). If potential for exposure exists refer to Section 8 for specific personal protective equipment.

Inhalation: Move person to fresh air. If person is not breathing, call an emergency responder or ambulance, then give artificial respiration; if by mouth to mouth use rescuer protection (pocket mask etc). Call a poison control center or doctor for treatment advice. If breathing is difficult, oxygen should be administered by qualified personnel.

Skin contact: Take off contaminated clothing. Wash skin with soap and plenty of water for 15-20 minutes. Call a poison control center or doctor for treatment advice. Wash clothing before reuse. Shoes and other leather items which cannot be decontaminated should be disposed of properly. Suitable emergency safety shower facility should be immediately available.

Eye contact: Wash immediately and continuously with flowing water for at least 30 minutes. Remove contact lenses after the first 5 minutes and continue washing. Obtain prompt medical consultation, preferably from an ophthalmologist. Suitable emergency eye wash facility should be immediately available.

Ingestion: If the person is fully alert and cooperative, have the person rinse mouth with plenty of water. In cases of ingestion have the person drink 4 to 10 ounces (120-300 mL) of water. Do not induce vomiting. Do not attempt mouth rinse if the person has respiratory distress, altered mental status, or nausea and vomiting. Call a physician and/or transport to emergency facility immediately. If swallowed, DO NOT induce vomiting.

Most important symptoms and effects, both acute and delayed: Aside from the information found under Description of first aid measures (above) and Indication of immediate medical attention and special treatment needed (below), any additional important symptoms and effects are described in Section 11: Toxicology Information.

Indication of any immediate medical attention and special treatment needed
Notes to physician: Maintain adequate ventilation and oxygenation of the patient. May cause respiratory sensitization or asthma-like symptoms. Bronchodilators, expectorants and antitussives may be of help. Glutaraldehyde may transiently worsen reversible airways obstruction including asthma or reactive airways disease. Treat bronchospasm with inhaled beta2 agonist and oral or parenteral corticosteroids. Chemical eye burns may require extended irrigation. Obtain prompt consultation, preferably from an ophthalmologist. If burn is present, treat as any thermal burn, after decontamination. Due to irritant properties, swallowing may result in burns/ulceration of mouth, stomach and lower gastrointestinal tract with subsequent stricture. Aspiration of vomitus may cause

lung injury. Suggest endotracheal/esophageal control if lavage is done. Probable mucosal damage may contraindicate the use of gastric lavage. No specific antidote. Treatment of exposure should be directed at the control of symptoms and the clinical condition of the patient. Have the Safety Data Sheet, and if available, the product container or label with you when calling a poison control center or doctor, or going for treatment. Excessive exposure may aggravate preexisting asthma and other respiratory disorders (e.g. emphysema, bronchitis, reactive airways dysfunction syndrome).

5. FIREFIGHTING MEASURES

Suitable extinguishing media: To extinguish combustible residues of this product use water fog, carbon dioxide, dry chemical or foam.

Unsuitable extinguishing media: None known.

Special hazards arising from the substance or mixture
Hazardous combustion products: Under fire conditions some components of this product may decompose. The smoke may contain unidentified toxic and/or irritating compounds. Combustion products may include and are not limited to: Carbon monoxide. Carbon dioxide.

Unusual Fire and Explosion Hazards: This material will not burn until the water has evaporated. Residue can burn.

Advice for firefighters
Fire Fighting Procedures: Keep people away. Isolate fire and deny unnecessary entry. To extinguish combustible residues of this product use water fog, carbon dioxide, dry chemical or foam. Contain fire water run-off if possible. Fire water run-off, if not contained, may cause environmental damage. Review the “Accidental Release Measures” and the “Ecological Information” sections of this (M)SDS.

Special protective equipment for firefighters: Wear positive-pressure self-contained breathing apparatus (SCBA) and protective fire fighting clothing (includes fire fighting helmet, coat, trousers, boots, and gloves). Avoid contact with this material during fire fighting operations. If contact is likely, change to full chemical resistant fire fighting clothing with self-contained breathing apparatus. If this is not available, wear full chemical resistant clothing with self-contained breathing apparatus and fight fire from a remote location. For protective equipment in post-fire or non-fire clean-up situations, refer to the relevant sections.

6. ACCIDENTAL RELEASE MEASURES

Personal precautions, protective equipment and emergency procedures: Evacuate area. Keep upwind of spill. Ventilate area of leak or spill. Only trained and properly protected personnel must be involved in clean-up operations. Refer to section 7, Handling, for additional precautionary measures. Use appropriate safety equipment. For additional information, refer to Section 8, Exposure Controls and Personal Protection.

Environmental precautions: Prevent from entering into soil, ditches, sewers, waterways and/or groundwater. See Section 12, Ecological Information. Spills or discharge to natural waterways is likely to kill aquatic organisms.

Methods and materials for containment and cleaning up: Avoid making contact with spilled material, glutaraldehyde will be absorbed by most shoes. Always wear the correct protective

equipment, consisting of splashproof monogoggles, or both safety glasses with side shields and a wraparound full-face shield, appropriate gloves and protective clothing. A self-contained breathing apparatus or respirator and absorbents may be necessary, depending on the size of the spill and the adequacy of ventilation. Small spills: Wear the correct protective equipment and cover the liquid with absorbent material. Collect and seal the material and the dirt that has absorbed the spilled material in polyethylene bags and place in a drum for transit to an approved disposal site. Rinse away the remaining spilled material with water to reduce odor, and discharge the rinsate into a municipal or industrial sewer. Large spills: In case of nasal and respiratory irritation, vacate the room immediately. Personnel cleaning up should be trained and equipped with a self-contained breathing apparatus, or an officially approved or certified full-face respirator equipped with an organic vapor cartridge, gloves, and clothing impervious to glutaraldehyde, including rubber boots or shoe protection. Deactivate with sodium bisulfite (2-3 parts (by weight) per part of active substance glutaraldehyde), collect the neutralized liquid and place in a drum for transit to an approved disposal site.

7. HANDLING AND STORAGE

Precautions for safe handling: Do not spray or aerosolize the undiluted form of the product. Full personal protective equipment (including skin covering and full-face SCBA respirator) is required for dilutions or mixtures of the product used in a spray application.

Keep out of reach of children. Do not get in eyes, on skin, on clothing. Do not swallow. Avoid prolonged or repeated contact with skin. Avoid breathing vapor. Keep container closed. Use with adequate ventilation. Wear goggles, protective clothing and butyl or nitrile gloves. Wash thoroughly with soap and water after handling. Remove contaminated clothing and wash before reuse. See Section 8, EXPOSURE CONTROLS AND PERSONAL PROTECTION.

Conditions for safe storage: Do not store in: Aluminum. Carbon steel. Copper. Mild steel. Iron.

Storage stability
Shelf life: Use within 18 Month

8. EXPOSURE CONTROLS/PERSONAL PROTECTION

Control parameters
Exposure limits are listed below, if they exist.

Component	Regulation	Type of listing	Value/Notation
Glutaraldehyde	ACGIH	C	0.05 ppm
	ACGIH	C	DSEN, RSEN

Exposure controls
Engineering controls: Use engineering controls to maintain airborne level below exposure limit requirements or guidelines. If there are no applicable exposure limit requirements or guidelines, use only with adequate ventilation. Local exhaust ventilation may be necessary for some operations.

Individual protection measures

Eye/face protection: Use chemical goggles. If exposure causes eye discomfort, use a full-face respirator. Use a full-face respirator when material is heated or when aerosols/mists are generated. Eye wash fountain should be located in immediate work area.

Skin protection

Hand protection: Use gloves chemically resistant to this material. Examples of preferred glove barrier materials include: Butyl rubber. Examples of acceptable glove barrier materials include: Nitrile/butadiene rubber (“nitrile” or “NBR”). NOTICE: The

selection of a specific glove for a particular application and duration of use in a workplace should also take into account all relevant workplace factors such as, but not limited to: Other chemicals which may be handled, physical requirements (cut/puncture protection, dexterity, thermal protection), potential body reactions to glove materials, as well as the instructions/specifications provided by the glove supplier.

Other protection: Use protective clothing chemically resistant to this material. Selection of specific items such as face shield, boots, apron, or full body suit will depend on the task. Safety shower should be located in immediate work area. Use chemical protective clothing resistant to this material, when there is any possibility of skin contact. Remove contaminated clothing immediately, wash skin area with soap and water, and launder clothing before reuse or dispose of properly. Items which cannot be decontaminated, such as shoes, belts and watchbands, should be removed and disposed of properly.

Respiratory protection: Atmospheric levels should be maintained below the exposure guideline. When respiratory protection is required for certain operations, use an approved air-purifying respirator. This product is a respiratory irritant. If discomfort is experienced ventilation is not adequate and an approved full face air-purifying respirator is recommended. If vapors are strong enough to be irritating to the nose, or eyes, the OEL is probably being exceeded. Special ventilation or respiratory protection may be required. For operations such as spraying and other conditions such as emergencies where the exposure guideline may be greatly exceeded, use an approved positive-pressure self-contained breathing apparatus. For emergency response or for situations where the atmospheric level is unknown, use an approved positive-pressure self-contained breathing apparatus or positive-pressure air line with auxiliary self-contained air supply.

The following should be effective types of air-purifying respirators: Full-face Organic vapor cartridge with a particulate pre-filter.

9. PHYSICAL AND CHEMICAL PROPERTIES

Appearance	
Physical state	Liquid.
Color	Colorless
Odor	Fruity
Odor Threshold	< 1 ppb *Literature*
pH	3.1 - 4.5 *ASTM E70*
Melting point/range	Not applicable to liquids
Freezing point	-17 °C (1 °F) *Calculated.*
Boiling point (760 mmHg)	100.7 °C (213.3 °F) *OECD Test Guideline 103*
Flash point	**closed cup** *Tag Closed Cup ASTM D56* None
Evaporation Rate (Butyl Acetate = 1)	1.0 *Calculated.*
Flammability (solid, gas)	Not applicable to liquids
Lower explosion limit	No test data available
Upper explosion limit	No test data available
Vapor Pressure	0.3 mmHg at 20 °C (68 °F) *OECD Test Guideline 104* Active ingredient

Relative Vapor Density (air = 1)	1.0 *Calculated.*
Relative Density (water = 1)	1.118 at 20 °C (68 °F) *OECD 109*
Water solubility	100 % at 20 °C (68 °F) *Calculated.*
Partition coefficient: n-octanol/water	no data available
Auto-ignition temperature	No test data available
Decomposition temperature	No test data available
Kinematic Viscosity	No test data available
Explosive properties	no data available
Oxidizing properties	no data available
Liquid Density	9.3100 lb/gln at 20 °C (68 °F) *Calculated.*
Molecular weight	100.11 g/mol *Calculated.*

NOTE: The physical data presented above are typical values and should not be construed as a specification.

10. STABILITY AND REACTIVITY

Reactivity: no data available

Chemical stability: Thermally stable at typical use temperatures.

Possibility of hazardous reactions: Polymerization will not occur.

Conditions to avoid: Active ingredient decomposes at elevated temperatures.

Incompatible materials: Avoid contact with: Amines. Ammonia. Strong acids. Strong bases. Strong oxidizers. Avoid contact with metals such as: Aluminum. Carbon steel. Copper. Iron. Mild steel.

Hazardous decomposition products: Decomposition products depend upon temperature, air supply and the presence of other materials.

11. TOXICOLOGICAL INFORMATION

Toxicological information on this product or its components appear in this section when such data is available.

Acute toxicity

Acute oral toxicity

Moderate toxicity if swallowed. Swallowing may result in irritation or burns of the mouth, throat, and gastrointestinal tract. Swallowing may result in gastrointestinal irritation or ulceration. Excessive exposure may cause: Headache. Dizziness. Anesthetic effects. Drowsiness. Unconsciousness. Other central nervous system effects.

As product: Single dose oral LD50 has not been determined.

For the 50% aqueous solution:
LD50, Rat, male and female, 200 mg/kg

Acute dermal toxicity
Prolonged skin contact is unlikely to result in absorption of harmful amounts.

For the 50% aqueous solution:
LD50, Rabbit, male and female, > 2,000 mg/kg

Acute inhalation toxicity
Vapor from heated material or mist may cause serious adverse effects, even death. Vapor may cause severe irritation of the upper respiratory tract (nose and throat). Case reports and medical surveys link asthma and respiratory irritation to glutaraldehyde exposure, primarily in medical personnel. Asthma-like symptoms may occur in people prone to respiratory disorders or other allergies. Asthma-like symptoms may include coughing, difficult breathing and a feeling of tightness in the chest. Occasionally, breathing difficulties may be life threatening.

As product: The LC50 has not been determined.

For the 50% aqueous solution:
LC50, Rat, female, 4 Hour, dust/mist, 0.28 mg/l
For the 50% aqueous solution:
LC50, Rat, male, 4 Hour, dust/mist, 0.35 mg/l

Skin corrosion/irritation
Brief contact may cause skin burns. Symptoms may include pain, severe local redness and tissue damage.

Serious eye damage/eye irritation
May cause severe irritation with corneal injury which may result in permanent impairment of vision, even blindness. Chemical burns may occur.
Vapor may cause eye irritation experienced as mild discomfort and redness.

Sensitization
Skin contact may cause an allergic skin reaction in a small proportion of individuals.
Has caused allergic skin reactions when tested in guinea pigs.
Has demonstrated the potential for contact allergy in mice.

May cause allergic respiratory response in a small proportion of individuals.

Specific Target Organ Systemic Toxicity (Single Exposure)
May cause respiratory irritation.

Specific Target Organ Systemic Toxicity (Repeated Exposure)
Repeated skin contact may result in absorption of amounts which could cause death.
May cause nausea and vomiting.

Carcinogenicity
In a NTP chronic 2-year inhalation study on glutaraldehyde, no carcinogenicity was seen in rats or in mice. An increase in large granular lymphocytes in Fischer rats dosed with glutaraldehyde for two

years was random or a secondary carcinogenic effect due to a modifying influence on the occurrence of this common neoplasm in this rat strain.

Teratogenicity
For glutaraldehyde: Has been toxic to the fetus in laboratory animals at doses toxic to the mother. Did not cause birth defects in laboratory animals.

Reproductive toxicity
For glutaraldehyde: In animal studies, did not interfere with reproduction.

Mutagenicity
For glutaraldehyde: In vitro genetic toxicity studies were negative in some cases and positive in other cases. Animal genetic toxicity studies were predominantly negative.

Aspiration Hazard
Aspiration into the lungs may occur during ingestion or vomiting, causing tissue damage or lung injury.

12. ECOLOGICAL INFORMATION

Ecotoxicological information on this product or its components appear in this section when such data is available.

Toxicity

Glutaraldehyde

Acute toxicity to fish
Material is highly toxic to aquatic organisms on an acute basis (LC50/EC50 between 0.1 and 1 mg/L in the most sensitive species tested).
LC50, Cyprinodon variegatus (sheepshead minnow), 96 Hour, 32 mg/l

Acute toxicity to aquatic invertebrates
LC50, copepod Acartia tonsa, semi-static test, 48 Hour, 3 mg/l

Acute toxicity to algae/aquatic plants
ErC50, Desmodesmus subspicatus (Scenedesmus subspicatus), 72 Hour, 0.6 mg/l
NOEC, Desmodesmus subspicatus (Scenedesmus subspicatus), 72 Hour, Growth rate inhibition, 0.025 mg/l

Toxicity to bacteria
EC50, activated sludge, > 50 mg/l, OECD 209 Test

Chronic toxicity to aquatic invertebrates
NOEC, water flea Daphnia magna, flow-through test, 21 d, number of offspring, 0.12 mg/l

Toxicity to Above Ground Organisms
Material is moderately toxic to birds on an acute basis (LD50 between 51 and 500 mg/kg).
Material is practically non-toxic to birds on a dietary basis (LC50 > 5000 ppm).
oral LD50, Anas platyrhynchos (Mallard duck), 408 - 466 mg/kg
dietary LC50, Colinus virginianus (Bobwhite quail), > 5,000 ppm
dietary LC50, Anas platyrhynchos (Mallard duck), > 5,000 ppm

Persistence and degradability

Glutaraldehyde

Biodegradability: 10-day Window: Pass
Biodegradation: 73 %
Exposure time: 9 d
Method: OECD Test Guideline 301A or Equivalent

Theoretical Oxygen Demand: 1.92 mg/mg

Biological oxygen demand (BOD)

Incubation Time	BOD
5 d	28 %
10 d	57 - 63 %

Photodegradation
Test Type: Half-life (indirect photolysis)
Sensitizer: OH radicals
Atmospheric half-life: 2.74 Hour
Method: Estimated.

Bioaccumulative potential

Glutaraldehyde

Bioaccumulation: Bioconcentration potential is low (BCF < 100 or Log Pow < 3).
Partition coefficient: n-octanol/water(log Pow): -0.333 Measured

Mobility in soil

Glutaraldehyde

Potential for mobility in soil is high (Koc between 50 and 150).
Given its very low Henry's constant, volatilization from natural bodies of water or moist soil is not expected to be an important fate process.
Partition coefficient(Koc): 120 - 500 Estimated.

13. DISPOSAL CONSIDERATIONS

Disposal methods: DO NOT DUMP INTO ANY SEWERS, ON THE GROUND, OR INTO ANY BODY OF WATER. All disposal practices must be in compliance with all Federal, State/Provincial and local laws and regulations. Regulations may vary in different locations. Waste characterizations and compliance with applicable laws are the responsibility solely of the waste generator. AS YOUR SUPPLIER, WE HAVE NO CONTROL OVER THE MANAGEMENT PRACTICES OR MANUFACTURING PROCESSES OF PARTIES HANDLING OR USING THIS MATERIAL. THE INFORMATION PRESENTED HERE PERTAINS ONLY TO THE PRODUCT AS SHIPPED IN ITS INTENDED CONDITION AS DESCRIBED IN MSDS SECTION: Composition Information. FOR UNUSED & UNCONTAMINATED PRODUCT, the preferred options include sending to a licensed, permitted: Incinerator or other thermal destruction device.

14. TRANSPORT INFORMATION

DOT

Proper shipping name	Corrosive liquids, toxic, n.o.s.(Glutaraldehyde)
UN number	UN 2922
Class	8 (6.1)
Packing group	II

Classification for SEA transport (IMO-IMDG):

Proper shipping name	CORROSIVE LIQUID, TOXIC, N.O.S.(Glutaraldehyde)
UN number	UN 2922
Class	8 (6.1)
Packing group	II
Marine pollutant	Glutaraldehyde
Transport in bulk according to Annex I or II of MARPOL 73/78 and the IBC or IGC Code	Consult IMO regulations before transporting ocean bulk

Classification for AIR transport (IATA/ICAO):

Proper shipping name	Corrosive liquid, toxic, n.o.s.(Glutaraldehyde)
UN number	UN 2922
Class	8 (6.1)
Packing group	II

This information is not intended to convey all specific regulatory or operational requirements/information relating to this product. Transportation classifications may vary by container volume and may be influenced by regional or country variations in regulations. Additional transportation system information can be obtained through an authorized sales or customer service representative. It is the responsibility of the transporting organization to follow all applicable laws, regulations and rules relating to the transportation of the material.

15. REGULATORY INFORMATION

OSHA Hazard Communication Standard
This product is a “Hazardous Chemical” as defined by the OSHA Hazard Communication Standard, 29 CFR 1910.1200.

Superfund Amendments and Reauthorization Act of 1986 Title III (Emergency Planning and Community Right-to-Know Act of 1986) Sections 311 and 312
Acute Health Hazard

Superfund Amendments and Reauthorization Act of 1986 Title III (Emergency Planning and Community Right-to-Know Act of 1986) Section 313
This material does not contain any chemical components with known CAS numbers that exceed the threshold (De Minimis) reporting levels established by SARA Title III, Section 313.

Comprehensive Environmental Response, Compensation, and Liability Act of 1980 (CERCLA) Section 103
To the best of our knowledge, this product does not contain chemicals at levels which require reporting under this statute.

Pennsylvania Worker and Community Right-To-Know Act:
The following chemicals are listed because of the additional requirements of Pennsylvania law:

Components	**CASRN**
Glutaraldehyde	111-30-8

California Proposition 65 (Safe Drinking Water and Toxic Enforcement Act of 1986)
This product contains no listed substances knownto the State of California to cause cancer, birth defects or other reproductive harm, at levels which would require a warning under the statute.

United States TSCA Inventory (TSCA)
This product contains chemical substance(s) exempt from U.S. EPA TSCA Inventory requirements. It is regulated as a pesticide subject to Federal Insecticide, Fungicide, and Rodenticide Act (FIFRA) requirements.

Federal Insecticide, Fungicide and Rodenticide Act
EPA Registration Number: 464-692
This chemical is a pesticide product registered by the Environmental Protection Agency and is subject to certain labeling requirements under federal pesticide law. These requirements differ from the classification criteria and hazard information required for safety data sheets, and for workplace labels of non-pesticide chemicals. Following is the hazard information as required on the pesticide label:

DANGER

Corrosive
Causes irreversible eye damage
Causes skin burns.
Harmful if inhaled
May be fatal if swallowed.
Harmful if absorbed through skin
Prolonged or frequently repeated skin contact may cause allergic reactions in some individuals.
Causes asthmatic signs and symptoms in hyper-reactive individuals.
This pesticide is toxic to fish.

16. OTHER INFORMATION

Product Literature
Additional information on this product may be obtained by calling your sales or customer service contact.

Revision
Identification Number: 101225931 / A001 / Issue Date: 03/16/2015 / Version: 8.1
Most recent revision(s) are noted by the bold, double bars in left-hand margin throughout this document.

Legend

ACGIH	USA. ACGIH Threshold Limit Values (TLV)
C	Ceiling limit
DSEN, RSEN	Skin and respiratory sensitizer

Information Source and References
This SDS is prepared by Product Regulatory Services and Hazard Communications Groups from information supplied by internal references within our company.

THE DOW CHEMICAL COMPANY urges each customer or recipient of this (M)SDS to study it carefully and consult appropriate expertise, as necessary or appropriate, to become aware of and understand the data contained in this (M)SDS and any hazards associated with the product. The information herein is provided in good faith and believed to be accurate as of the effective date shown above. However, no warranty, express or implied, is given. Regulatory requirements are subject to change and may differ between various locations. It is the buyer's/user's responsibility to ensure that his activities comply with all federal, state, provincial or local laws. The information presented here pertains only to the product as shipped. Since conditions for use of the product are not under the control of the manufacturer, it is the buyer's/user's duty to determine the conditions necessary for the safe use of this product. Due to the proliferation of sources for information such as manufacturer-specific (M)SDSs, we are not and cannot be responsible for (M)SDSs obtained from any source other than ourselves. If you have obtained an (M)SDS from another source or if you are not sure that the (M)SDS you have is current, please contact us for the most current version.

1. IDENTIFICATION

Product Identifier: Diesel Fuel

Synonyms: Diesel Fuel, Motor Vehicle Diesel Fuel, Dyed Diesel, * DieselOne®, * DieselOne® w/Platinum Plus DFX, Low Sulfur Diesel (LSD), Ultra Low Sulfur Diesel (ULSD)

Intended use of the product: Fuel

Contact:
Global Companies LLC
Water Mill Center
800 South St.
Waltham, MA 02454-9161
www.globalp.com

Contact Information: EMERGENCY TELEPHONE NUMBER (24 hrs): CHEMTREC (800) 424-9300
COMPANY CONTACT (business hours): 800-542-0778

2. HAZARD IDENTIFICATION

According to OSHA 29 CFR 1910.1200 HCS

Classification of the Substance or Mixture

Classification (GHS-US):

Flam. Liquid	Category 3	H226
Skin Corrosion/Irritation	Category 2	H315
Aspiration Hazard	Category 1	H304
STOT SE	Category 3	H336
Carcinogenicity	Category 2	H350
Aquatic Chronic	Category 2	H411
Serious Eye Damage/ Irritation	Category 2B	H319

Labeling Elements



Signal Word (GHS-US): **Danger**

Hazard Statements (GHS-US):
H226 – Flammable liquid and vapor.
H315 – Causes Skin irritation.
H304 – May be fatal if swallowed and enters airways.
H336 – May cause drowsiness or dizziness.
H350 – May cause cancer.
H411 – Toxic to aquatic life with long lasting effects.
H319 – May cause eye damage/irritation.

Precautionary Statements (GHS-US):
P210 - Keep away from heat/sparks/open flames/hot surfaces. - No smoking.
P233 - Keep container tightly closed.
P240 – Ground/bond container and receiving equipment.

P241 – Use explosion-proof electrical/ventilating/lighting equipment pursuant to applicable electrical code.
P242 – Use only non-sparking tools.
P243 – Take precautionary measures against static discharge.
P261 – Avoid breathing dust/fume/gas/mist/vapors/spray.
P264 – Wash skin thoroughly after handling.
P271 – Use only outdoors or in a well-ventilated area.
P273 – Avoid release to the environment.
P280 - Wear protective gloves/protective clothing/eye protection/face protection.
P303+361+353 - If on skin (or hair): Take off immediately all contaminated clothing. Rinse with water/shower.
P308+311 - If exposed or concerned: Get medical advice/attention.
P301+310 - If swallowed: Immediately call a poison center/doctor/...
P331 - Do NOT induce vomiting.
P370+P378 – In case of fire use firefighting foam or other appropriate media for Class B fires to extinguish.
P403+235 - Store in a well-ventilated place. Keep cool.
P405 - Store locked up.
P501 – Dispose of contents/container in accordance with local/regional/national/international regulation.

Other information:

NFPA 704
Health: 1
Fire: 2
Reactivity: 0



3. COMPOSITION / INFORMATION ON INGREDIENTS

Chemical Composition Information

Mixture

Name	Product Identifier (CAS#)	% (w/w)	Classification
Diesel Fuel	68476-34-6	100	Flam Liq. 3, H226; Skin Irrit. 2, H315; Aspiration 1, H304; STOT SE 3, H336; Carc.2. H350; Aquatic chronic 2, H411
Naphthalene	91-20-3	<0.1	Carc. 2, H351; Acute Tox. 4, H302; Aquatic Acute 1, H400; Aquatic Chronic 1, H410

Additional Formulation Information:

Diesel Fuel consists of C9+ hydrocarbons resulting from distillation of crude oil.

Low Sulfur Diesel Fuel typically contains less than 500 ppm of sulfur

Ultra Low Sulfur Diesel Fuel typically contains less than 15 ppm of sulfur

4. FIRST AID MEASURES

Route	Measures
Inhalation	Remove person to fresh air. If person is not breathing, ensure an open airway and provide artificial respiration. If necessary, provide additional oxygen once breathing is restored if trained to do so. Seek medical attention immediately.
Ingestion	Aspiration Hazard: DO NOT INDUCE VOMITING. Do not give liquids. Obtain immediate medical attention. If spontaneous vomiting occurs, lean victim forward to reduce the risk of aspiration. Ingestion may cause gastrointestinal disturbances including irritation, nausea, vomiting, and diarrhea, and central nervous system (brain) effects similar to alcohol intoxication. In severe cases, tremors, convulsions, loss of consciousness, coma, respiratory failure, and death.
Eye Contact	In case of contact with eyes, immediately flush with clean, low-pressure water for at least 15 min. Hold eyelids open to ensure adequate flushing. Seek medical attention. In case of contact lenses, remove immediately.
Skin Contact	Remove contaminated clothing and shoes. Wash contaminated areas thoroughly with soap and water or waterless hand cleanser. Obtain medical attention if irritation or redness develops. Thermal burns require immediate medical attention depending on the severity and of the area of the body burned.

Most Important Symptoms
Contact with eyes and face may cause irritation. Long-term exposure may cause dermatitis (itching, irritation, pain and swelling).

Inhalation may cause irritation and significant or long term exposure could cause respiratory insufficiency and pulmonary edema.

Ingestion may cause aspiration, gastrointestinal disturbance, and CNS effects.

Immediate Medical Attention and Special Treatment
For contact with skin or eyes, immediately wash or flush contaminated eyes with gently flowing water. If possible, irrigate each eye continuously with 0.9% saline (NS). If ingested, rinse mouth. Do NOT induce vomiting, as this may cause chemical pneumonia (fluid in the lungs).

If inhaled, administer oxygen or establish a patent airway if breathing is labored. Suction if necessary. Monitor closely, anticipate seizures. Consider orotracheal or nostracheal intubation of airway control if patient is unconscious or is in severe respiratory distress.

Discard any clothing or shoes contaminated as they may be flammable.

5. FIRE-FIGHTING MEASURES

Extinguishing Media
Foam, carbon dioxide, dry chemical are most suitable

SMALL FIRES: Any extinguisher suitable for Class B fires, dry chemical, C02, water spray, firefighting foam, or Halon. Small fires in the incipient (beginning) stage may typically be extinguished using handheld portable fire extinguishers and other firefighting equipment.

LARGE FIRES: Foam, carbon dioxide, dry chemical. Water may be ineffective for fighting the fire, but may be used to cool fire-exposed containers.

Specific Hazards / Products of Combustion
Moderate fire hazard when exposed to heat or flame with a very low flash point. Product is flammable and easily ignited when exposed to heat, spark, open flame or other source of ignition. Flowing product may be ignited by self-generated static electricity. When mixed with air and exposed to an ignition source, flammable vapors can burn in the open or explode in confined spaces. Being heavier than air, vapors may travel long distances to an ignition source and flash back. Runoff to sewer may cause fire or explosion hazard.

Combustion may produce smoke, carbon monoxide and other products of incomplete combustion.

Special Precautions and Protective Equipment for Firefighters
Isolate area around container involved in fire. Cool tanks, shells, and containers exposed to fire and excessive heat with water.

For massive fires the use of unmanned hose holders or monitor nozzles may be advantageous to further minimize personnel exposure. Major fires may require withdrawal, allowing the tank to burn. Large storage tank fires typically require specially trained personnel and equipment to extinguish the fire, often including the need for properly applied firefighting foam.

Fighting Equipment/Instructions
Firefighting activities that may result in potential exposure to high heat, smoke or toxic by-products of combustion should require NIOSH- approved pressure-demand self-contained breathing apparatus with full face piece and protective clothing.

Refer to Section 9 for fire properties of this chemical including flash point, auto ignition temperature, and explosive limits.

6. ACCIDENTAL RELEASE MEASURES

ACTIVATE FACILITY SPCC, SPILL CONTINGENCY or EMERGENCY PLAN.

Personal Precautions
Due to high vapor density, flammable / toxic vapors may be present in low lying areas, dikes, pits, drains, or trenches. Vapors may accumulate in low lying areas and reach ignitable concentrations. Ventilate the area. Use of non-sparking tools and intrinsically safe equipment is recommended. Potential for flammable atmosphere should be monitored using a combustible gas indicator positioned downwind of the spill area. Refer to Sections 2 and 7 for further hazard warnings and handling instructions.

Use appropriate personal protective equipment to prevent eye/skin contact and absorption. Use NIOSH approved respiratory protection, if warranted, to prevent exposures above permissible limits. Refer to Section 8. Contaminated clothing should not be near sources of ignition.

Emergency Measures
As an immediate precautionary measure, isolate spill or leak area for at least 50 meters (150 feet) in all directions. Consider wind direction. Secure all ignition sources (flame, spark, hot work, hot metal, etc.) from area. Evaluate the direction of product travel, diking sewers, etc. to confirm spill areas. Do not touch or walk-through spilled material. For large spills, isolate initial action distance downwind 1,000 ft. (300 m).

Environmental Precautions
Stop the spill to prevent environmental release if it can be done safely. Product is toxic to aquatic life. Take action to isolate environmental receptors including drains, storm sewers and natural water bodies. Keep on impervious surface if at all possible. Use water sparingly to prevent product from spreading. Foam and absorbents may be used to reduce / prevent airborne release.

Spills may infiltrate subsurface soil and groundwater; professional assistance may be necessary to determine the extent of subsurface impact.

Follow federal, state or local requirements for reporting environmental release where necessary. Refer to Section 15 for further information.

Containment and Clean-Up Methods
Carefully contain and stop the source of the spill, if safe to do so. Protect bodies of water by diking absorbents, or absorbent boom, if possible. Do not flush down sewer or drainage systems, unless system is designed and permitted to handle such material. The use of firefighting foam may be useful in certain situations to reduce vapors. The proper use of water spray may effectively disperse product vapors or the liquid itself, preventing contact with ignition sources or areas/equipment that require protection.

Take up with dry earth, sand or other non-combustible, inert oil absorbing materials. Carefully shovel, scoop or sweep up into a waste container with clean, non-sparking tools for reclamation or disposal. Response and cleanup crews must be properly trained and must utilize proper protective equipment. Refer to Section 8 for appropriate protective equipment.

7. HANDLING AND STORAGE

USE ONLY AS A FUEL.
DO NOT SIPHON BY MOUTH.

Handling Precautions
Handle as a flammable liquid. Keep away from heat, sparks, and open flame. No smoking. Electrical equipment should be approved for classified area. Bond and ground containers during product transfer pursuant to NFPA 70 and API RP 2003 to

reduce the possibility of static-initiated fire or explosion. Follow precautions to prevent static initiated fire.

Use good personal hygiene practices. Use only with protective equipment specified in Section 8. Avoid repeated and/or prolonged skin exposure. Use only outdoors or in well ventilated areas. Wash hands before eating, drinking, smoking, or using toilet facilities. Do not use as a cleaning solvent on the skin. Do not use solvents or harsh abrasive skin cleaners for washing this product from exposed skin areas. Waterless hand cleaners are effective. Promptly remove contaminated clothing and launder before reuse. Use care when laundering to prevent the formation of flammable vapors which could ignite via washer or dryer. Consider the need to discard contaminated leather shoes and gloves. Emergency eye wash capability should be available in the near proximity to operations presenting a potential splash exposure.

Special slow load procedures for "switch loading" must be followed to avoid the static ignition hazard that can exist when higher flash point material (such as fuel oil) is loaded into tanks previously containing low flash point products (such as this product) - see API RP 2003, "Protection Against Ignitions Arising Out Of Static, Lightning and Stray Currents."

Storage
Large quantities of diesel fuel are stored in tanks or portable containers at an ambient storage temperature. Separate from incompatible chemicals (Refer to Section 10) by distance or secondary containment. Keep away from flame, sparks, excessive temperatures and open flame. Use approved vented containers that are clearly labeled. Label all secondary containers that this material is transferred into with the chemical name and associated hazard(s). Empty product containers or vessels may contain flammable vapors. Do not pressurize, cut, heat, weld or expose such containers to sources of ignition.

Storage tanks should have a venting system. If stored in small containers, the area should be well ventilated, away from ignition sources and protected from potential damage or vehicular traffic. Post “No Smoking” signs in product storage areas. This storage area should comply with NFPA 30 “Flammable and Combustible Liquid Code” or applicable building code. The cleaning of tanks previously containing this product should follow API Recommended Practice (RP) 2013 “Cleaning Mobile Tanks in Flammable and Combustible Liquid Service” and API RP 2015 “Safe Entry and Cleaning of Petroleum Storage Tanks”.

Incompatibles
Keep away from strong oxidizers, ignition sources and heat.

8. EXPOSURE CONTROLS / PERSONAL PROTECTION

Occupational Exposure Limits

Component	CAS #	List	Value
Diesel Fuel	68476-34-6	ACGIH TLV-TWA	100 mg/m3*
Naphthalene	91-20-3	ACGIH TLV-TWA OSHA PEL ACGIH STEL	10 ppm 10 ppm 15 ppm

*Critical effects; Skin; A3; CNS impairment.

Engineering Controls
Use adequate ventilation to keep vapor concentrations of this product below occupational exposure and flammability limits, particularly in confined spaces. Intrinsically safe equipment and non-sparking tools shall be used in circumstances where concentrations may exceed lower flammable limits. Grounding and bonding shall be used to prevent accumulation and discharge of static electricity. Emergency shower and eyewash should be provided in proximity to handling areas in the event of exposure to decontaminate.

Personal Protective Equipment

Exposure	Equipment
Eye / Face	Wear appropriate chemical protective glasses or goggles or face shields to prevent skin and eye contact especially caused from splashing.
Skin	Wear appropriate personal protective clothing to prevent skin contact. Gloves constructed of nitrile, neoprene or PVC are recommended when handling this material. Chemical protective clothing such as of E.I. DuPont TyChem®, Saranex® or equivalent recommended based on degree of exposure. Note: The resistance of specific material may vary from product to product as well as with degree of exposure.

Exposure	Equipment
Respiratory	A NIOSH/MSHA-approved air-purifying respirator with organic vapor cartridges or canister may be permissible under certain circumstances where airborne concentrations are or may be expected to exceed exposure limits or for odor or irritation. Protection provided by air-purifying respirators is limited. Refer to OSHA 29 CFR 1910.134, ANSI Z88.2-1992, NIOSH Respirator Decision Logic, and the manufacturer for additional guidance on respiratory protection selection and limitations. Use a positive pressure, air-supplied respirator if there is a potential for uncontrolled release, exposure levels are not known, in oxygen-deficient atmospheres, or any other circumstance where an air-purifying respirator may not provide adequate protection.
Thermal	Product is stored at ambient temperature. No thermal protection is required except for emergency operations involving actual or potential for fire. Use adequate ventilation to keep vapor concentrations of this product below occupational exposure and flammability limits, particularly in confined spaces.

9. PHYSICAL AND CHEMICAL PROPERTIES

Property	Value	
Appearance	Clear or straw-colored liquid. May be dyed red for distribution.	
Odor	Mild characteristic petroleum distillate odor.	
Odor Threshold	<1 ppm	
pH	Not available	
Melting Point	-22 to -0.4 ˚F (-30 to -18 ˚C)	
Boiling Point Range	320 to 690 ˚F (160 to 366 ˚C)	
Flash Point	> 125.6 ˚F (52 ˚C) PMCC	
Evaporation Rate	Slow, varies with conditions	
Flammability	Flammable liquid	
Flammable Limits	0.6 % - 6.5%	
Vapor Pressure	0.009 psia @ 70 ˚F	
Vapor Density	> 1	(air=1)
Specific Gravity	0.83-0.86 @ 60 ˚F (16 ˚C)	(water=1)
Solubility	Insoluble in water; miscible with other petroleum solvents.	
Partition Coefficient (N-octanol/water)	Log Kow range of 3.3 to >.6.0	
Autoignition Temperature	494 ˚F (257 ˚C)	
Decomposition Temperature	When heated it emits acrid smoke and irritating vapors.	
Viscosity	>3 cSt	
Percent Volatiles	100	

10. STABILITY AND REACTIVITY

Stability
This is a stable material that is flammable liquid (OSHA/GHS hazard category 3). Stable during transport.

Reactivity
Material is not self-reacting. Flammable concentrations may be present in air. Compound can react with oxidizing materials.

Possibility of Hazardous Reactions
Hazardous polymerization will not occur.

Incompatibility
Keep away from strong oxidizers such as nitric and sulfuric acids.

Conditions to Avoid
Avoid high temperatures, open flames, sparks, static electricity, welding, smoking and other ignition sources.

Hazardous Decomposition Products
Carbon monoxide, carbon dioxide and non-combusted hydrocarbons (smoke).

11. TOXICOLOGICAL INFORMATION

Acute Toxicity:
Acute Toxicity (Inhalation LC50)
Diesel Fuel (68476-34-6)
LC50 Inhalation Rat >6 mg/l/4h

Acute Toxicity (Dermal LD50)
Diesel Fuel (68476-34-6)
LD50 Dermal Rabbit >5000 mg/kg

Acute Toxicity (Oral LD50)
Diesel Fuel (68476-34-6)
LD50 Oral Rabbit >5000 mg/kg

Skin Corrosion/Irritation: Prolonged and repeated contact may cause skin irritation leading to dermatitis. Liquid may be absorbed through the skin in toxic amounts if large areas of skin are exposed repeatedly.

Serious Eye Damage/Irritation: Causes serious eye irritation.

Respiratory or Skin Sensitization: Not classified

Germ Cell Mutagenicity: Not classified

Teratogenicity: Not available

Carcinogenicity: OSHA: NO, IARC: Group 3, NTP: NO, ACGIH: NOIC:A3, NIOSH: NO

IARC: Group 3 – Not classifiable as to their carcinogenicity to humans

ACGIH: A3 – Confirmed animal carcinogen with unknown relevance to humans.

Studies have shown that similar products produce skin tumors in laboratory animals following repeated applications without washing or removal. The significance of this finding to human exposure has not been determined. Other studies with active skin carcinogens have shown that washing the animal's skin with soap and water between applications reduced tumor formation.

IARC classifies whole diesel fuel exhaust particulates (byproduct of combustion of this material) carcinogenic to humans (Group 1) and NIOSH regards diesel fuel exhaust particulate as a potential occupational carcinogen.

Reproductive Toxicity: Not classified

Specific Target Organ Toxicity (Repeated Exposure): Not classified

Specific Target Organ Toxicity (Single Exposure): Inhalation exposure may cause drowsiness or dizziness by inhalation exposure.

Aspiration Hazard: The major health threat of ingestion occurs from the danger of aspiration (breathing) of liquid drops into the lungs, particularly from vomiting. Aspiration may result in chemical pneumonia (fluid in the lungs), severe lung damage, respiratory failure and even death.

Potential Health Effects: Vapor irritating to skin, eyes, nose, and throat. Ingestion may cause gastrointestinal disturbances, including irritation, nausea, vomiting and diarrhea, and central nervous system (brain) effects similar to alcohol intoxication. In severe cases, tremors, convulsions, loss of consciousness, coma, respiratory arrest, and death may occur.

WARNING: The burning of any hydrocarbon as a fuel in an area without adequate ventilation may result in hazardous levels of

combustion products, including carbon monoxide, and inadequate oxygen levels, which may cause unconsciousness, suffocation, and death.

12. ECOLOGICAL INFORMATION

Toxicity:
This material is expected to be toxic to aquatic organisms and may cause long-term adverse effects in the aquatic environment.

Data for Component: Diesel Fuel (68476-34-6)

Material is toxic to aquatic organisms based on an acute basis (LC50/EC50 >1 but ≤ 10 mg/L in the most sensitive species tested).

Material is a long-term aquatic hazard based on a chronic basis (LC50/EC50 >1 but ≤ 10 mg/L in the most sensitive species tested).

Persistence and Degradation: This material is not expected to be readily biodegradable.

Bioaccumulative Potential: Not available

Mobility in Soil: Not available

Other Adverse Effects: None known

Other Information: Avoid release to the environment.

13. DISPOSAL CONSIDERATIONS

Consult federal, state and local waste regulations to determine appropriate disposal options. May be considered a hazardous waste if disposed. Direct solid waste (landfill) or incineration at a solid waste facility is not permissible. Do not discharge to sanitary or storm sewer. Personnel handling waste containers should follow precautions provided in this document.

Shipping containers must be DOT authorized packages. Follow licensure and regulations for transport of hazardous material and hazardous waste as applicable.

14. TRANSPORT INFORMATION

US DOT

UN Identification Number	NA 1993 / UN 1202
Proper Shipping Name	Diesel Fuel
Hazard Class and Packing Group	3, PGIII
Shipping Label	Combustible liquid
Placard / Bulk Package	Combustible liquid, 1993
Emergency Response Guidebook Guide Number	128

IATA Information

UN Identification Number	UN 1202
Proper Shipping Name	Combustible-Liquid, N.O.S. (Fuel, Diesel)
Hazard Class and Packing Group	3, PGIII
ICAO Label	3
Packing Instructions Cargo	310
Max Quantity Per Package Cargo	220L
Packing Instructions Passenger	309Y
Max Quantity per Package	60L

ICAO

UN Identification Number	UN 1202
Shipping Name / Description	Combustible-Liquid, N.O.S. (Fuel, Diesel)
Hazard Class and Packing Group	3, PG III
IMDG Label	3

IMDG

UN Identification Number	UN 1202
Shipping Name / Description	Combustible-Liquid, N.O.S. (Fuel, Diesel)
Hazard Class and Packing Group	3, PGIII
IMDG Label	3
EmS Number	F-E-S-E
Marine Pollutant	Yes

15. REGULATORY INFORMATION

U.S. Federal, State, and Local Regulatory Information
Any spill or uncontrolled release of this product, including any substantial threat of release, may be subject to federal, state and/or local reporting requirements. This product and/or its constituents may also be subject to other federal, state, or local regulations; consult those regulations applicable to your facility/operation.

OSHA Hazard Communication Standard
This product is a "Hazardous Chemical" as defined by the OSHA Hazard Communication Standard, 29 CFR 1910.1200.

Superfund Amendments and Reauthorization Act of 1986 Title III (Emergency Planning And Community Right-to-Know Act of 1986) Sections 311 and 312

Immediate (Acute) Health Hazard	Yes
Delayed (Chronic) Health Hazard	Yes
Fire Hazard	Yes
Reactive Hazard	No
Sudden Release of Pressure Hazard	No

Clean Water Act (Oil Spills)
Any spill or release of this product to “navigable waters” (Essentially any surface water, including certain wetlands) or adjoining shorelines sufficient to cause a visible sheen or deposit of a sludge or emulsion must be reported immediately to the National Response Center (1-800-424-8802) or, if not practical, the U.S. Coast Guard with follow up to the National Response Center, as required by U.S. Federal Law. Also contact appropriate state and local regulatory agencies as required.

CERCLA Section 103 and SARA Section 304 (Release to the Environment)
The CERCLA definition of hazardous substances contains a “petroleum exclusion” clause which exempts this material. This product does not contain any chemicals subject to the reporting requirements of CERCLA Section 103 or SARA 304.

SARA Section 313- Supplier Notification
This product does not contain any chemicals subject to the reporting requirements of Section 313 of the Emergency Planning and Community Right-To-Know Act (EPCRA) of 1986 and of 40 CFR 372.

EPA Notification (Oil Spills)
If the there is a discharge of more than 1,000-gallons of oil into or upon navigable waters of the United States, or if it is the second spill event of 42 gallons or more of oil into water within a twelve (12) month period, a written report must be submitted to the Regional Administrator of the EPA within sixty days of the event.

Pennsylvania Right to Know Hazardous Substance list:
The following product components are cited in the Pennsylvania Special Hazardous Substance List, and are present at levels which require reporting.

Component	CAS	Amount
Diesel Fuel	68476-34-6	100%

New Jersey Right to Know Hazardous Substance list:
The following product components are cited in the New Jersey Right to Know Hazardous Substance List, and are present at levels which require reporting.

Component	CAS	Amount
Diesel Fuel	68476-34-6	100%

California Proposition 65 WARNING: This product contains chemicals known to the State of California to cause Cancer or Reproductive Toxicity.

Component	CAS	Amount
Naphthalene	91-20-3	<0.1%

U.S. Toxic Substances Control Act
All components of this product are on the TSCA Inventory or are exempt from TSCA Inventory requirements under 40 CFR 720.30.

CEPA - Domestic Substances List (DSL)
All substances contained in this product are listed on the Canadian Domestic Substances List (DSL) or are not required to be listed.

Canadian Regulatory Information (WHMIS)
Class B3 – Combustible Liquid
Class D2A – Materials causing other toxic effects. (Very Toxic)

16. OTHER INFORMATION

Version	4
Issue Date	May 20, 2016
Prior Issue Date	May 3, 2015

Description of Revisions
Revised to meet Globally Harmonized System for chemical hazard communication requirements pursuant to OSHA regulatory revisions 77 FR 17884, March 26, 2012.

Abbreviations

˚F	Degrees Fahrenheit (temperature)
<	Less than
=	Equal to
>	Greater than
AP	Approximately
C	Centigrade (temperature)
kg	Kilogram
L	Liter
mg	Milligrams
mL	Milliliter
mm^2	Square millimeters
mmHg	Millimeters of mercury (pressure)
N/A	Not applicable
N/D	Not determined
ppm	Parts per million
sec	Second
ug	Micrograms

Acronyms

ACGIH	American Conference of Governmental Industrial Hygienists
AIHA	American Industrial Hygiene Association
AL	Action Level
ANSI	American National Standards Institute
API	American Petroleum Institute
CAS	Chemical Abstract Service
CERCLA	Comprehensive Emergency Response, Compensation, and Liability Act
DOT	U.S. Department of Transportation
EC50	Ecological concentration 50%
EPA	U.S. Environmental Protection Agency
ERPG	Emergency Response Planning Guideline
GHS	Global Harmonized System
HMIS	Hazardous Materials Information System
IARC	International Agency for Research On Cancer
IATA	International Air Transport Association
IMDG	International Maritime Dangerous Goods
Koc	Soil Organic Carbon
LC50	Lethal concentration 50%
LD50	Lethal dose 50%
MSHA	Mine Safety and Health Administration
NFPA	National Fire Protection Association
NIOSH	National Institute of Occupational Safety and Health
NOIC	Notice of Intended Change

NTP	National Toxicology Program
OPA	Oil Pollution Act of 1990
OSHA	U.S. Occupational Safety & Health Administration
PEL	Permissible Exposure Limit (OSHA)
RCRA	Resource Conservation and Recovery Act Reauthorization Act of 1986 Title III
REL	Recommended Exposure Limit (NIOSH)
RVP	Reid Vapor Pressure
SARA	Superfund Amendments and
SCBA	Self Contained Breathing Apparatus
SPCC	Spill Prevention, Control, and Countermeasures
STEL	Short Term Exposure Limit (generally 15 minutes)
TLV	Threshold Limit Value (ACGIH)
TSCA	Toxic Substances Control Act
TWA	Time Weighted Average (8 hr.)
UN	United Nations
UNECE	United Nations Economic Commission for Europe
WEEL	Workplace Environmental Exposure Level (AIHA)
WHMIS	Canadian Workplace Hazardous Materials Information System

Disclaimer of Expressed and Implied Warranties

Information presented herein has been compiled from sources considered to be dependable, and is accurate and reliable to the best of our knowledge and belief, but is not guaranteed to be so. Since conditions of use are beyond our control, we make no warranties, expressed or implied, except those that may be contained in our written contract of sale or acknowledgment.

Vendor assumes no responsibility for injury to vendee or third persons proximately caused by the material if reasonable safety procedures are not adhered to as stipulated in the data sheet. Additionally, vendor assumes no responsibility for injury to vendee or third persons proximately caused by abnormal use of the material, even if reasonable safety procedures are followed. Furthermore, vendee assumes the risk in their use of the material.

** End of Safety Data Sheet **

SAFETY DATA SHEET

Issue Date No data available **Revision Date** 22-Apr-2015 **REVISION NUMBER:** 4

1. IDENTIFICATION OF THE SUBSTANCE/PREPARATION AND OF THE COMPANY/UNDERTAKING

Product identifier
Product Name SYNTHITE ER-41 Spray

Other means of identification
Product Code ER-41 SPRAY
Synonyms None

Recommended use of the chemical and restrictions on use
Recommended Use No information available.
Uses advised against No information available

Details of the supplier of the safety data sheet
MANUFACTURED BY:
JOHN C. DOLPH, a Von Roll Company
320 New Road, MONMOUTH JUNCTION, NJ 08852
BUSINESS: (732) 329-2333
EMERGENCY: (518) 395-3310

Emergency telephone number

2. HAZARDS IDENTIFICATION

Classification

OSHA Regulatory Status
This chemical is considered hazardous by the 2012 OSHA Hazard Communication Standard (29 CFR 1910.1200)

Acute toxicity - Inhalation (Dusts/Mists)	Category 4
Skin corrosion/irritation	Category 2
Serious eye damage/eye irritation	Category 2A
Skin sensitization	Category 1
Germ cell mutagenicity	Category 1B
Carcinogenicity	Category 1A
Specific target organ toxicity (repeated exposure)	Category 2
Aspiration toxicity	Category 1
Flammable liquids	Category 3

Label elements

Emergency Overview

Danger

Hazard statements
Harmful if inhaled
Causes skin irritation
Causes serious eye irritation
May cause an allergic skin reaction
May cause genetic defects
May cause cancer
May cause damage to organs through prolonged or repeated exposure
May be fatal if swallowed and enters airways
Flammable liquid and vapor



Appearance No information available **PHYSICAL STATE** Liquid **ODOR** No information available

Precautionary Statements - Prevention
Obtain special instructions before use
Do not handle until all safety precautions have been read and understood
Use personal protective equipment as required
Wash face, hands and any exposed skin thoroughly after handling
Contaminated work clothing should not be allowed out of the workplace
Do not breathe dust/fume/gas/mist/vapors/spray
Keep away from heat/sparks/open flames/hot surfaces. — No smoking
Keep container tightly closed
Ground/bond container and receiving equipment
Use explosion-proof electrical/ventilating/lighting/ .? /equipment
Use only non-sparking tools
Take precautionary measures against static discharge
Wear protective gloves/protective clothing/eye protection/face protection

Precautionary Statements - Response
IF exposed or concerned: Get medical advice/attention
Specific treatment (see .? on this label)
IF IN EYES: Rinse cautiously with water for several minutes. Remove contact lenses, if present and easy to do. Continue rinsing
If eye irritation persists: Get medical advice/attention
Take off contaminated clothing and wash before reuse
If skin irritation or rash occurs: Get medical advice/attention
IF ON SKIN (or hair): Remove/Take off immediately all contaminated clothing. Rinse skin with water/shower
IF SWALLOWED: Immediately call a POISON CENTER or doctor/physician
Do NOT induce vomiting
In case of fire: Use CO2, dry chemical, or foam for extinction

Precautionary Statements - Storage
Store locked up
Store in a well-ventilated place. Keep cool

Precautionary Statements - Disposal
Dispose of contents/container to an approved waste disposal plant

Hazards not otherwise classified (HNOC)
Other Information
• May be harmful in contact with skin
• Very toxic to aquatic life with long lasting effects
• Very toxic to aquatic life
Toxicity: Not determined

3. COMPOSITION/INFORMATION ON INGREDIENTS

HAZARDOUS PRODUCT COMPOSITION/CAS NUMBER	CAS No.	APPROX. WEIGHT PERCENT	TRADE SECRET
Xylene (Mixed Isomers) 1330-20-7	1330-20-7	10 - 30	

Propane/Isobutane Propellant Gas 68476-85-7	68476-85-7	10 - 30	
Iron Oxide 1309-37-1	1309-37-1	10 - 30	
Ethyl Benzene 100-41-4	100-41-4	5 - 10	
Methyl Ethyl Ketoxime 96-29-7	96-29-7	1 - 5	
Stoddard Solvent 8052-41-3	8052-41-3	0.1 - 1	
Cobalt 2-Ethylhexanoate 136-52-7	136-52-7	0.1 - 1	

4. FIRST AID MEASURES

First aid measures

EYE CONTACT Rinse thoroughly with plenty of water for at least 15 minutes, lifting lower and upper eyelids. Consult a physician.

SKIN CONTACT Wash skin with soap and water.

Inhalation Remove to fresh air.

INGESTION Clean mouth with water and drink afterwards plenty of water.

Most important symptoms and effects, both acute and delayed

Symptoms No information available.

Indication of any immediate medical attention and special treatment needed

Note to physicians Treat symptomatically.

5. FIRE-FIGHTING MEASURES

Suitable extinguishing media
Use extinguishing measures that are appropriate to local circumstances and the surrounding environment.

Unsuitable extinguishing media Caution: Use of water spray when fighting fire may be inefficient.

Special Hazards:
None Known.

Explosion data
Sensitivity to Mechanical Impact None.
Sensitivity to Static Discharge None.

Protective equipment and precautions for firefighters
As in any fire, wear self-contained breathing apparatus pressure-demand, MSHA/NIOSH (approved or equivalent) and full protective gear.

6. ACCIDENTAL RELEASE MEASURES

Personal precautions, protective equipment and emergency procedures

Personal precautions Ensure adequate ventilation, especially in confined areas.

Environmental precautions

Environmental precautions See Section 12 for additional ecological information.

Methods and material for containment and cleaning up

Methods for containment Prevent further leakage or spillage if safe to do so.

Methods for cleaning up Pick up and transfer to properly labeled containers.

7. HANDLING AND STORAGE

Precautions for safe handling

Advice on safe handling Handle in accordance with good industrial hygiene and safety practice.

Conditions for safe storage, including any incompatibilities

Storage Conditions Keep containers tightly closed in a dry, cool and well-ventilated place.

Incompatible materials None known based on information supplied.

8. EXPOSURE CONTROLS/PERSONAL PROTECTION

Control parameters

Exposure Guidelines .

HAZARDOUS PRODUCT COMPOSITION/CAS NUMBER	ACGIH TLV	OSHA PEL-TWA	NIOSH IDLH
Xylene (Mixed Isomers) 1330-20-7	STEL: 150 ppm TWA: 100 ppm	100	-
Propane/Isobutane Propellant Gas 68476-85-7	TWA: 1000 ppm	TWA: 1000 ppm TWA: 1800 mg/m³ (vacated) TWA: 1000 ppm (vacated) TWA: 1800 mg/m³	IDLH: 2000 ppm TWA: 1000 ppm TWA: 1800 mg/m³
Iron Oxide 1309-37-1	TWA: 5 mg/m³ respirable fraction	10	IDLH: 2500 mg/m³ Fe dust and fume TWA: 5 mg/m³ Fe dust and fume
Ethyl Benzene 100-41-4	TWA: 20 ppm	100	IDLH: 800 ppm TWA: 100 ppm TWA: 435 mg/m³ STEL: 125 ppm STEL: 545 mg/m³
Methyl Ethyl Ketoxime 96-29-7	-	-	-
Stoddard Solvent 8052-41-3	TWA: 100 ppm	500	IDLH: 20000 mg/m³ Ceiling: 1800 mg/m³ 15 min TWA: 350 mg/m³
Cobalt 2-Ethylhexanoate 136-52-7	-	-	-

Appropriate engineering controls

ENGINEERING CONTROLS: Exhaust ventilation.
Showers.
Eyewash stations.
Use in a well ventilated area.

Individual protection measures, such as personal protective equipment

Von Roll recommends evaluation and selection of appropriate engineering controls (such as ventilation and eyewash/safety shower) as well as appropriate personal protective equipment (such as respiratory protection, protective gloves, eye protection) for safely handling this material. The following guidelines should be considered in this process.

EYE PROTECTION: Safety glasses with side shields (designed to ANSI standards). Goggles may be required based on application and processing of material. Splash Goggles.

GLOVES:	Neoprene gloves. Viton rubber gloves.
VENTILATION:	Use only in well ventilated area.
RESPIRATORY PROTECTION:	Use approved NIOSH respiratory protection if TLV exceeded, or over exposure is likely. Cartridge respirator. Use an approved NIOSH organic vapor respirator below the TLV. If TLV is exceeded or overexposure is likely, use positive pressure or self contained breathing apparatus. Appropriate respiratory protection shall be worn when applied engineering controls are not adequate to protect against inhalation exposure.
OTHER PERSONAL PROTECTION DATA:	Rubber apron or other chemical-resistant apron. Additional PPE may be required based application and processing of material. Consult with professional for appropriate personal protective equipment selection.
General Hygiene Considerations	Handle in accordance with good industrial hygiene and safety practice.

9. PHYSICAL AND CHEMICAL PROPERTIES

Information on basic physical and chemical properties

PHYSICAL STATE	Liquid		
Appearance	No information available	**ODOR:**	AROMATIC
DESCRIPTION:	RED	**ODOR THRESHOLD (PPM):**	UNKNOWN

PROPERTIES	**Values**	**Remarks • Method**
pH	No information available	
Melting point/freezing point	No information available	
Boiling point / boiling range	No information available	
Flash point	-104 °C / -155 °F	
EVAPORATION RATE	No information available	
Flammability (solid, gas)	No information available	
Flammability Limit in Air		
Upper flammability limit:	7.0%	
Lower flammability limit:	1.0%	
VAPOR PRESSURE	No information available	
VAPOR DENSITY	No information available	
SPECIFIC GRAVITY	1.05	
Water solubility	No information available	
Solubility in other solvents	No information available	
Partition coefficient	No information available	
Autoignition temperature	No information available	
Decomposition temperature	No information available	
Kinematic viscosity	No information available	
Dynamic viscosity	No information available	
Explosive properties	No information available	
Oxidizing properties	No information available	

Other Information

Softening point	No information available
DENSITY	No information available
Bulk density	No information available

10. STABILITY AND REACTIVITY

REACTIVITY
No data available

Chemical stability
Stable under recommended storage conditions.

Possibility of Hazardous Reactions
None under normal processing.

CONDITIONS TO AVOID
Avoid any source of ignition. Temperatures above 85 F. Strong oxidizers and this product may liberate hydrogen gas. Avoid contact with heat, sparks, open flame, and static discharge.

Incompatible materials
Contact with oxidizing agents. Avoid contact with acidic, basic or oxidizing agents. Peroxides, Chlorates and Permanganates

Hazardous Decomposition Products
Carbon monoxide. Carbon dioxide. Hydrocarbons

11. TOXICOLOGICAL INFORMATION

Information on likely routes of exposure

PRODUCT INFORMATION No data available

Inhalation No data available.

EYE CONTACT No data available.

SKIN CONTACT No data available.

INGESTION No data available.

HAZARDOUS PRODUCT COMPOSITION/CAS NUMBER	Oral LD50	Dermal LD50	Inhalation LC50
Xylene (Mixed Isomers) 1330-20-7	= 3500 mg/kg (Rat) = 4820 mg/kg (Rat)	> 4350 mg/kg (Rabbit) > 1700 mg/kg (Rabbit) > 2000 mg/kg (Rabbit)	= 29.08 mg/L (Rat) 4 h = 5000 ppm (Rat) 4 h > 5.04 mg/L (Rat) 4 h
Propane/Isobutane Propellant Gas 68476-85-7	-	-	-
Iron Oxide 1309-37-1	> 10000 mg/kg (Rat)	-	-
Ethyl Benzene 100-41-4	= 3500 mg/kg (Rat) = 4820 mg/kg (Rat)	= 15400 mg/kg (Rabbit) > 2000 mg/kg (Rabbit)	= 17.2 mg/L (Rat) 4 h > 5.04 mg/L (Rat) 4 h
Methyl Ethyl Ketoxime 96-29-7	= 930 mg/kg (Rat)	= 0.2 mg/kg (Rabbit)	= 20 mg/L (Rat) 4 h
Stoddard Solvent 8052-41-3	-	-	-
Cobalt 2-Ethylhexanoate 136-52-7	-	-	-

Information on toxicological effects

Symptoms No information available.

Delayed and immediate effects as well as chronic effects from short and long-term exposure

Sensitization No information available.
Germ cell mutagenicity No information available.
Carcinogenicity The table below indicates whether each agency has listed any ingredient as a carcinogen.

HAZARDOUS PRODUCT COMPOSITION/CAS NUMBER	ACGIH	IARC	NTP	OSHA
Xylene (Mixed Isomers) 1330-20-7	-	Group 3	-	-
Propane/Isobutane Propellant Gas 68476-85-7	-	-	-	-

Iron Oxide 1309-37-1	-	Group 3	-	-
Ethyl Benzene 100-41-4	A3	Group 2B	-	X
Methyl Ethyl Ketoxime 96-29-7	-	-	-	-
Stoddard Solvent 8052-41-3	-	-	-	-
Cobalt 2-Ethylhexanoate 136-52-7	-	Group 2B	-	X

Reproductive toxicity No information available.
STOT - single exposure No information available.
Aspiration hazard No information available.

Numerical measures of toxicity - PRODUCT INFORMATION

Toxicity: Not determined
The following values are calculated based on chapter 3.1 of the GHS document .
ATEmix (oral) 23546 mg/kg
ATEmix (dermal) 2825 mg/kg mg/L

12. ECOLOGICAL INFORMATION

Ecotoxicity

65.0475% of the mixture consists of components(s) of unknown hazards to the aquatic environment

HAZARDOUS PRODUCT COMPOSITION/CAS NUMBER	Acute Algae Toxicity:	Acute Fish Toxicity:	Crustacea
Xylene (Mixed Isomers) 1330-20-7	11: 72 h Pseudokirchneriella subcapitata mg/L EC50	13.1 - 16.5: 96 h Lepomis macrochirus mg/L LC50 flow-through 13.5 - 17.3: 96 h Oncorhynchus mykiss mg/L LC50 2.661 - 4.093: 96 h Oncorhynchus mykiss mg/L LC50 static 23.53 - 29.97: 96 h Pimephales promelas mg/L LC50 static 30.26 - 40.75: 96 h Poecilia reticulata mg/L LC50 static 7.711 - 9.591: 96 h Lepomis macrochirus mg/L LC50 static 13.4: 96 h Pimephales promelas mg/L LC50 flow-through 19: 96 h Lepomis macrochirus mg/L LC50 780: 96 h Cyprinus carpio mg/L LC50 semi-static 780: 96 h Cyprinus carpio mg/L LC50	0.6: 48 h Gammarus lacustris mg/L LC50 3.82: 48 h water flea mg/L EC50
Propane/Isobutane Propellant Gas 68476-85-7	-	-	-
Iron Oxide 1309-37-1	-	-	-
Ethyl Benzene 100-41-4	1.7 - 7.6: 96 h Pseudokirchneriella subcapitata mg/L EC50 static 2.6 - 11.3: 72 h Pseudokirchneriella subcapitata mg/L EC50 static 11: 72 h Pseudokirchneriella subcapitata mg/L EC50 4.6: 72 h Pseudokirchneriella subcapitata mg/L EC50 438: 96 h Pseudokirchneriella subcapitata mg/L EC50	11.0 - 18.0: 96 h Oncorhynchus mykiss mg/L LC50 static 7.55 - 11: 96 h Pimephales promelas mg/L LC50 flow-through 9.1 - 15.6: 96 h Pimephales promelas mg/L LC50 static 32: 96 h Lepomis macrochirus mg/L LC50 static 4.2: 96 h Oncorhynchus mykiss mg/L LC50 semi-static 9.6: 96 h Poecilia reticulata mg/L LC50 static	1.8 - 2.4: 48 h Daphnia magna mg/L EC50
Methyl Ethyl Ketoxime 96-29-7	83: 72 h Desmodesmus subspicatus mg/L EC50	320 - 1000: 96 h Leuciscus idus mg/L LC50 static 777 - 914: 96 h Pimephales promelas mg/L LC50 flow-through 760: 96 h Poecilia reticulata mg/L LC50 static	750: 48 h Daphnia magna mg/L EC50
Stoddard Solvent 8052-41-3	-	-	-

Cobalt 2-Ethylhexanoate 136-52-7	-	-	-

Persistence and degradability
No information available.

Bioaccumulation
No information available.

HAZARDOUS PRODUCT COMPOSITION/CAS NUMBER	Partition coefficient
Xylene (Mixed Isomers) 1330-20-7	2.77 - 3.15
Propane/Isobutane Propellant Gas 68476-85-7	<=2.8
Iron Oxide 1309-37-1	-
Ethyl Benzene 100-41-4	3.118
Methyl Ethyl Ketoxime 96-29-7	0.65
Stoddard Solvent 8052-41-3	-
Cobalt 2-Ethylhexanoate 136-52-7	-

Other adverse effects No information available

13. DISPOSAL CONSIDERATIONS

Waste treatment methods

Disposal of wastes Disposal should be in accordance with applicable regional, national and local laws and regulations.

Contaminated packaging Do not reuse container.

EPA HAZARDOUS WASTE DISPOSAL CODE: D001, D018, RQ = 100 lb / 45.4 kg.

HAZARDOUS PRODUCT COMPOSITION/CAS NUMBER	RCRA Classification:	RCRA - Basis for Listing	RCRA - D Series Wastes	RCRA - U Series Wastes
Xylene (Mixed Isomers) 1330-20-7	-	Included in waste stream: F039	-	U239
Propane/Isobutane Propellant Gas 68476-85-7	-	-	-	-
Iron Oxide 1309-37-1	-	-	-	-
Ethyl Benzene 100-41-4	-	Included in waste stream: F039	-	-
Methyl Ethyl Ketoxime 96-29-7	-	-	-	-
Stoddard Solvent 8052-41-3	-	-	-	-
Cobalt 2-Ethylhexanoate 136-52-7	-	-	-	-

HAZARDOUS PRODUCT COMPOSITION/CAS NUMBER	RCRA - Halogenated Organic Compounds	RCRA - P Series Wastes	RCRA - F Series Wastes	RCRA - K Series Wastes
Xylene (Mixed Isomers) 1330-20-7	-	-	-	-

Propane/Isobutane Propellant Gas 68476-85-7	-	-	-	-
Iron Oxide 1309-37-1	-	-	-	-
Ethyl Benzene 100-41-4	-	-	-	-
Methyl Ethyl Ketoxime 96-29-7	-	-	-	-
Stoddard Solvent 8052-41-3	-	-	-	-
Cobalt 2-Ethylhexanoate 136-52-7	-	-	-	-

HAZARDOUS PRODUCT COMPOSITION/CAS NUMBER	California Hazardous Waste Status
Xylene (Mixed Isomers) 1330-20-7	Toxic Ignitable
Propane/Isobutane Propellant Gas 68476-85-7	-
Iron Oxide 1309-37-1	-
Ethyl Benzene 100-41-4	Toxic Ignitable
Methyl Ethyl Ketoxime 96-29-7	-
Stoddard Solvent 8052-41-3	-
Cobalt 2-Ethylhexanoate 136-52-7	Toxic

14. TRANSPORT INFORMATION

DOT SHIPPING NAME: CONSUMER COMMODITY, ORM-D FOR AIR AND OCEAN SHIPMENT: AEROSOLS, FLAMMABLE FOR DOMESTIC SHIPMENT:
DOT HAZARD CLASS: 2.1 NOT DOT REGULATED. FOR DOMESTIC SHIPMENT: FOR AIR AND OCEAN SHIPMENT:
DOT PACKING GROUP: NONE; NOT DOT REGULATED. FOR DOMESTIC SHIPMENT: FOR AIR AND OCEAN SHIPMENT:
DOT LABEL(S): FLAMMABLE GAS NOT DOT REGULATED. FOR DOMESTIC SHIPMENT: FOR AIR AND OCEAN SHIPMENT:
UN/NA NUMBER: UN1950 NOT DOT REGULATED. FOR DOMESTIC SHIPMENT: FOR AIR AND OCEAN SHIPMENT:
PLACARDS: FLAMMABLE GAS NOT DOT REGULATED. FOR DOMESTIC SHIPMENT: FOR AIR AND OCEAN SHIPMENT:
ICAO/IATA: 2.1
MARINE POLLUTANT: NONE
NMFC CLASSIFICATION: CLASS 55

15. REGULATORY INFORMATION

International Inventories

TSCA	Does not comply
DSL/NDSL	Complies
EINECS/ELINCS	Does not comply
ENCS	Does not comply
IECSC	Does not comply
KECL	Does not comply
PICCS	Does not comply
AICS	Does not comply

Legend:
TSCA - United States Toxic Substances Control Act Section 8(b) Inventory
DSL/NDSL - Canadian Domestic Substances List/Non-Domestic Substances List
EINECS/ELINCS - European Inventory of Existing Chemical Substances/European List of Notified Chemical Substances
ENCS - Japan Existing and New Chemical Substances
IECSC - China Inventory of Existing Chemical Substances
KECL - Korean Existing and Evaluated Chemical Substances
PICCS - Philippines Inventory of Chemicals and Chemical Substances
AICS - Australian Inventory of Chemical Substances

US Federal Regulations

SARA 313

Section 313 of Title III of the Superfund Amendments and Reauthorization Act of 1986 (SARA). This product does not contain any chemicals which are subject to the reporting requirements of the Act and Title 40 of the Code of Federal Regulations, Part 372

SARA 311/312 Hazard Categories

ACUTE HEALTH HAZARD	No
FIRE HAZARD	No
Sudden release of pressure hazard	No
REACTIVE HAZARD	No

CWA (Clean Water Act)

This product does not contain any substances regulated as pollutants pursuant to the Clean Water Act (40 CFR 122.21 and 40 CFR 122.42)

HAZARDOUS PRODUCT COMPOSITION/CAS NUMBER	CWA - Reportable Quantities	CWA - Toxic Pollutants	CWA - Priority Pollutants	CWA - Hazardous Substances
Xylene (Mixed Isomers) 1330-20-7	100 lb	-	-	X
Propane/Isobutane Propellant Gas 68476-85-7	-	-	-	-
Iron Oxide 1309-37-1	-	-	-	-
Ethyl Benzene 100-41-4	1000 lb	X	X	X
Methyl Ethyl Ketoxime 96-29-7	-	-	-	-
Stoddard Solvent 8052-41-3	-	-	-	-
Cobalt 2-Ethylhexanoate 136-52-7	-	-	-	-

CERCLA

HAZARDOUS PRODUCT COMPOSITION/CAS NUMBER	Hazardous Substances RQs	CERCLA/SARA RQ
Xylene (Mixed Isomers) 1330-20-7	100 lb	RQ 100 lb final RQ RQ 45.4 kg final RQ
Propane/Isobutane Propellant Gas 68476-85-7	-	-
Iron Oxide 1309-37-1	-	-
Ethyl Benzene 100-41-4	1000 b	RQ 1000 b final RQ RQ 454 kg final RQ
Methyl Ethyl Ketoxime 96-29-7	-	-
Stoddard Solvent 8052-41-3	-	-
Cobalt 2-Ethylhexanoate 136-52-7	-	-

US State Regulations

CALIFORNIA PROPOSITION 65

HAZARDOUS PRODUCT COMPOSITION/CAS NUMBER	CALIFORNIA PROPOSITION 65
Xylene (Mixed Isomers) 1330-20-7	-

Propane/Isobutane Propellant Gas 68476-85-7	-
Iron Oxide 1309-37-1	-
Ethyl Benzene 100-41-4	Carcinogen
Methyl Ethyl Ketoxime 96-29-7	-
Stoddard Solvent 8052-41-3	-
Cobalt 2-Ethylhexanoate 136-52-7	-

U.S. State Right-to-Know Regulations

HAZARDOUS PRODUCT COMPOSITION/CAS NUMBER	New Jersey Right-to-Know List:	MA Right to Know Law:	Pennsylvania Right to Know List
Xylene (Mixed Isomers) 1330-20-7	X	X	X
Propane/Isobutane Propellant Gas 68476-85-7	X	X	X
Iron Oxide 1309-37-1	X	X	X
Ethyl Benzene 100-41-4	X	X	X
Methyl Ethyl Ketoxime 96-29-7	-	-	-
Stoddard Solvent 8052-41-3	X	X	X
Cobalt 2-Ethylhexanoate 136-52-7	X	-	X

U.S. EPA Label Information

EPA Pesticide Registration Number Not Applicable

16. OTHER INFORMATION

NFPA RATING: HEALTH 2 , FLAMMABILITY 4 , INSTABILITY 0
HMIS CLASSIFICATION: HEALTH *2 , FLAMMABILITY 4 , PHYSICAL HAZARD 0

Prepared By Santino M. Cardella
Revision Date 22-Apr-2015
Revision Note
No information available

Disclaimer

The information provided in this Material Safety Data Sheet is correct to the best of our knowledge, information and belief at the date of its publication. The information given is designed only as a guidance for safe handling, use, processing, storage, transportation, disposal and release and is not to be considered a warranty or quality specification. The information relates only to the specific material designated and may not be valid for such material used in combination with any other materials or in any process, unless specified in the text.

*****END OF MSDS*****

SAFETY DATA SHEET
THE DOW CHEMICAL COMPANY

Product name: DOWSIL™ Contractors Concrete Sealant White

Issue Date: 07/29/2019
Print Date: 07/30/2019

THE DOW CHEMICAL COMPANY encourages and expects you to read and understand the entire (M)SDS, as there is important information throughout the document. We expect you to follow the precautions identified in this document unless your use conditions would necessitate other appropriate methods or actions.

1. IDENTIFICATION

Product name: DOWSIL™ Contractors Concrete Sealant White

Recommended use of the chemical and restrictions on use
Identified uses: Construction materials and additives

COMPANY IDENTIFICATION
THE DOW CHEMICAL COMPANY
2030 DOW CENTER
MIDLAND MI 48674-0000
UNITED STATES

Customer Information Number: 800-258-2436
SDSQuestion@dow.com

EMERGENCY TELEPHONE NUMBER
24-Hour Emergency Contact: CHEMTREC +1 800-424-9300
Local Emergency Contact: 800-424-9300

2. HAZARDS IDENTIFICATION

Hazard classification
GHS classification in accordance with 29 CFR 1910.1200
Eye irritation - Category 2A
Reproductive toxicity - Category 2

Label elements
Hazard pictograms



Signal word: **WARNING!**

Hazards
Causes serious eye irritation.
Suspected of damaging fertility or the unborn child.

Precautionary statements

Prevention
Obtain special instructions before use.
Do not handle until all safety precautions have been read and understood.
Wash skin thoroughly after handling.
Use only outdoors or in a well-ventilated area.
Wear protective gloves/ protective clothing/ eye protection/ face protection.

Response
IF IN EYES: Rinse cautiously with water for several minutes. Remove contact lenses, if present and easy to do. Continue rinsing.
IF exposed or concerned: Get medical advice/ attention.
If eye irritation persists: Get medical advice/ attention.

Storage
Store locked up.

Disposal
Dispose of contents/ container to an approved waste disposal plant.

Other hazards
No data available

3. COMPOSITION/INFORMATION ON INGREDIENTS

Chemical nature: Silicone, Sealant
This product is a mixture.

Component	CASRN	Concentration
Limestone	1317-65-3	>= 48.0 - <= 52.0 %
Methylvinyl bis(N-ethylacetamido)silane	87855-59-2	>= 1.8 - <= 2.0 %
Dimethyl, methylhydrogen siloxane, dehydrogenated, reaction with hydroxydiethylamine	68952-53-4	>= 1.4 - <= 1.6 %
C.I. Pigment Yellow 53	8007-18-9	<= 1.6 %
Magnesium carbonate	546-93-0	>= 1.0 - <= 1.1 %
N-ethylacetamide	625-50-3	>= 0.24 - <= 0.27 %
Octamethyl Cyclotetrasiloxane	556-67-2	>= 0.2 - <= 0.27 %

Impurities in methylvinylbis(N-ethylacetamido)silane	Not available	>= 0.12 - <= 0.13 %

4. FIRST AID MEASURES

Description of first aid measures
General advice:
First Aid responders should pay attention to self-protection and use the recommended protective clothing (chemical resistant gloves, splash protection). If potential for exposure exists refer to Section 8 for specific personal protective equipment.

Inhalation: Move person to fresh air; if effects occur, consult a physician.

Skin contact: Remove material from skin immediately by washing with soap and plenty of water. Remove contaminated clothing and shoes while washing. Seek medical attention if irritation persists. Wash clothing before reuse. Discard items which cannot be decontaminated, including leather articles such as shoes, belts and watchbands.

Eye contact: Flush eyes thoroughly with water for several minutes. Remove contact lenses after the initial 1-2 minutes and continue flushing for several additional minutes. If effects occur, consult a physician, preferably an ophthalmologist. Suitable emergency eye wash facility should be available in work area.

Ingestion: No emergency medical treatment necessary.

Most important symptoms and effects, both acute and delayed:
Aside from the information found under Description of first aid measures (above) and Indication of immediate medical attention and special treatment needed (below), any additional important symptoms and effects are described in Section 11: Toxicology Information.

Indication of any immediate medical attention and special treatment needed
Notes to physician: No specific antidote. Treatment of exposure should be directed at the control of symptoms and the clinical condition of the patient.

5. FIREFIGHTING MEASURES

Extinguishing media

Suitable extinguishing media: Water spray. Alcohol-resistant foam. Carbon dioxide (CO2). Dry chemical.

Unsuitable extinguishing media: None known..

Special hazards arising from the substance or mixture

Hazardous combustion products: Carbon oxides. Silicon oxides. Nitrogen oxides (NOx). Metal oxides.

Unusual Fire and Explosion Hazards: Exposure to combustion products may be a hazard to health..

Advice for firefighters

Fire Fighting Procedures: Fire residues and contaminated fire extinguishing water must be disposed of in accordance with local regulations..
Use extinguishing measures that are appropriate to local circumstances and the surrounding environment. Use water spray to cool unopened containers. Collect contaminated fire extinguishing water separately. This must not be discharged into drains. Remove undamaged containers from fire area if it is safe to do so. Evacuate area.

Special protective equipment for firefighters: In the event of fire, wear self-contained breathing apparatus.. Use personal protective equipment..

6. ACCIDENTAL RELEASE MEASURES

Personal precautions, protective equipment and emergency procedures: Use personal protective equipment. Follow safe handling advice and personal protective equipment recommendations.

Environmental precautions: Discharge into the environment must be avoided. Prevent further leakage or spillage if safe to do so. Retain and dispose of contaminated wash water. Local authorities should be advised if significant spillages cannot be contained.

Methods and materials for containment and cleaning up: Wipe up or scrape up and contain for salvage or disposal. Local or national regulations may apply to releases and disposal of this material, as well as those materials and items employed in the cleanup of releases. You will need to determine which regulations are applicable. For large spills, provide dyking or other appropriate containment to keep material from spreading. If dyked material can be pumped, Sections 13 and 15 of this SDS provide information regarding certain local or national requirements.
See sections: 7, 8, 11, 12 and 13.

7. HANDLING AND STORAGE

Precautions for safe handling: Do not get on skin or clothing. Do not swallow. Do not get in eyes. Take care to prevent spills, waste and minimize release to the environment. Handle in accordance with good industrial hygiene and safety practice.
Use only with adequate ventilation. See Engineering measures under EXPOSURE CONTROLS/PERSONAL PROTECTION section.

Conditions for safe storage: Keep in properly labelled containers. Store locked up. Store in accordance with the particular national regulations.

Do not store with the following product types: Strong oxidizing agents.
Unsuitable materials for containers**:** None known.

8. EXPOSURE CONTROLS/PERSONAL PROTECTION

Control parameters
If exposure limits exist, they are listed below. If no exposure limits are displayed, then no values are applicable.

Component	Regulation	Type of listing	Value
Limestone	OSHA Z-1	TWA total dust	15 mg/m3

	OSHA Z-1	TWA respirable fraction	5 mg/m3
C.I. Pigment Yellow 53	ACGIH	TWA	0.5 mg/m3 , antimony
	Further information: URT irr: Upper Respiratory Tract irritation; skin irr: Skin irritation		
	ACGIH	TWA Inhalable fraction	0.2 mg/m3 , Nickel
	Further information: lung cancer: Lung cancer; A1: Confirmed human carcinogen; varies: varies		
Magnesium carbonate	OSHA Z-1	TWA total dust	15 mg/m3
	OSHA Z-1	TWA respirable fraction	5 mg/m3
Octamethyl Cyclotetrasiloxane	US WEEL	TWA	10 ppm

Although some of the components of this product may have exposure guidelines, no exposure would be expected under normal handling conditions due to the physical state of the material.

Exposure controls
Engineering controls: Use local exhaust ventilation, or other engineering controls to maintain airborne levels below exposure limit requirements or guidelines. If there are no applicable exposure limit requirements or guidelines, general ventilation should be sufficient for most operations. Local exhaust ventilation may be necessary for some operations.

Individual protection measures
Eye/face protection: Use safety glasses (with side shields).
Skin protection
Hand protection: Use gloves chemically resistant to this material. Examples of preferred glove barrier materials include: Butyl rubber. Neoprene. Nitrile/butadiene rubber ("nitrile" or "NBR"). Ethyl vinyl alcohol laminate ("EVAL"). Polyvinyl alcohol ("PVA"). Polyvinyl chloride ("PVC" or "vinyl"). Viton. Examples of acceptable glove barrier materials include: Natural rubber ("latex"). NOTICE: The selection of a specific glove for a particular application and duration of use in a workplace should also take into account all relevant workplace factors such as, but not limited to: Other chemicals which may be handled, physical requirements (cut/puncture protection, dexterity, thermal protection), potential body reactions to glove materials, as well as the instructions/specifications provided by the glove supplier.
Other protection: Use protective clothing chemically resistant to this material. Selection of specific items such as face shield, boots, apron, or full body suit will depend on the task.
Respiratory protection: Respiratory protection should be worn when there is a potential to exceed the exposure limit requirements or guidelines. If there are no applicable exposure limit requirements or guidelines, wear respiratory protection when adverse effects, such as respiratory irritation or discomfort have been experienced, or where indicated by your risk assessment process. For most conditions, no respiratory protection should be needed; however, if handling at elevated temperatures without sufficient ventilation, use an approved air-purifying respirator.
The following should be effective types of air-purifying respirators: Organic vapor cartridge.

9. PHYSICAL AND CHEMICAL PROPERTIES

Appearance

Physical state	paste
Color	in accordance with the product description

Odor	Fishy
Odor Threshold	No data available
pH	Not applicable
Melting point/range	No data available
Freezing point	No data available
Boiling point (760 mmHg)	Not applicable
Flash point	Not applicable
Evaporation Rate (Butyl Acetate = 1)	Not applicable
Flammability (solid, gas)	Not classified as a flammability hazard
Lower explosion limit	No data available
Upper explosion limit	No data available
Vapor Pressure	Not applicable
Relative Vapor Density (air = 1)	No data available
Relative Density (water = 1)	1.48
Water solubility	No data available
Partition coefficient: n-octanol/water	No data available
Auto-ignition temperature	No data available
Decomposition temperature	No data available
Dynamic Viscosity	Not applicable
Kinematic Viscosity	Not applicable
Explosive properties	Not explosive
Oxidizing properties	The substance or mixture is not classified as oxidizing.
Molecular weight	No data available
Particle size	No data available

NOTE: The physical data presented above are typical values and should not be construed as a specification.

10. STABILITY AND REACTIVITY

Reactivity: Not classified as a reactivity hazard.

Chemical stability: Stable under normal conditions.

Possibility of hazardous reactions: Can react with strong oxidizing agents.

Conditions to avoid: None known.

Incompatible materials: Oxidizing agents

Hazardous decomposition products:
Decomposition products can include and are not limited to: Formaldehyde.

11. TOXICOLOGICAL INFORMATION

Toxicological information appears in this section when such data is available.

Acute toxicity

Acute oral toxicity
Very low toxicity if swallowed. Harmful effects not anticipated from swallowing small amounts.

As product: Single dose oral LD50 has not been determined.

Based on information for component(s):
LD50, Rat, > 5,000 mg/kg Estimated.

Acute dermal toxicity
Prolonged skin contact is unlikely to result in absorption of harmful amounts.

As product: The dermal LD50 has not been determined.

Based on information for component(s):
LD50, > 2,000 mg/kg Estimated.

Acute inhalation toxicity
Brief exposure (minutes) is not likely to cause adverse effects. Vapor from heated material may cause respiratory irritation.
As product: The LC50 has not been determined.

Skin corrosion/irritation
Brief contact may cause slight skin irritation with local redness.

Serious eye damage/eye irritation
May cause slight eye irritation.

Sensitization
For skin sensitization:
Contains component(s) which have caused allergic skin sensitization in guinea pigs.

For respiratory sensitization:
No relevant information found.

Specific Target Organ Systemic Toxicity (Single Exposure)
Evaluation of available data suggests that this material is not an STOT-SE toxicant.

Specific Target Organ Systemic Toxicity (Repeated Exposure)
For this family of materials:
Based on available data, repeated exposures are not anticipated to cause significant adverse effects.

Carcinogenicity
For this family of materials: Did not cause cancer in long-term animal studies which used routes of exposure considered relevant to industrial handling. Positive results have been reported in other studies using routes of exposure not relevant to industrial handling. Both the National Toxicology Program (NTP) Third Annual Report on Carcinogens and the International Agency for Research on

Cancer (IARC) Monographs cite limited evidence for carcinogenicity to humans of certain nickel compounds, and sufficient evidence for carcinogenicity to animals. However, both state that it is not possible to specify which specific nickel compounds might be carcinogenic to humans. Nickel Antimony Titanium Yellow Rutile is not listed in the groups of compounds thought to be carcinogenic to either humans or animals.

Teratogenicity
Contains component(s) which did not cause birth defects or any other fetal effects in lab animals.

Reproductive toxicity
Contains component(s) which have been shown to interfere with reproduction in animal studies.
Contains component(s) which have interfered with fertility in animal studies.

Mutagenicity
Contains a component(s) which were negative in in vitro genetic toxicity studies.

Aspiration Hazard
Based on physical properties, not likely to be an aspiration hazard.

COMPONENTS INFLUENCING TOXICOLOGY:

Limestone
Acute inhalation toxicity
The LC50 has not been determined.

Methylvinyl bis(N-ethylacetamido)silane
Acute inhalation toxicity
The LC50 has not been determined.

Dimethyl, methylhydrogen siloxane, dehydrogenated, reaction with hydroxydiethylamine
Acute inhalation toxicity
The LC50 has not been determined.

Magnesium carbonate
Acute inhalation toxicity
The LC50 has not been determined.

N-ethylacetamide
Acute inhalation toxicity
Based on data from similar materials LC0, Rat, 8 Hour, vapour, 2.19 mg/l No deaths occurred following exposure to a saturated atmosphere.

Octamethyl Cyclotetrasiloxane
Acute inhalation toxicity
LC50, Rat, male and female, 4 Hour, dust/mist, 36 mg/l OECD Test Guideline 403

Carcinogenicity

Component	**List**	**Classification**
C.I. Pigment Yellow 53	ACGIH	A1: Confirmed Human Carcinogen

12. ECOLOGICAL INFORMATION

Ecotoxicological information appears in this section when such data is available.

Toxicity

Limestone

Acute toxicity to fish
Material is practically non-toxic to aquatic organisms on an acute basis (LC50/EC50/EL50/LL50 >100 mg/L in the most sensitive species tested).
LC50, Oncorhynchus mykiss (rainbow trout), 96 Hour, > 10,000 mg/l

Acute toxicity to aquatic invertebrates
EC50, Daphnia magna (Water flea), 48 Hour, > 1,000 mg/l

Acute toxicity to algae/aquatic plants
EC50, Desmodesmus subspicatus (green algae), 72 Hour, > 200 mg/l

Methylvinyl bis(N-ethylacetamido)silane

Acute toxicity to fish
Material is slightly toxic to aquatic organisms on an acute basis (LC50/EC50 between 10 and 100 mg/L in the most sensitive species tested).
LC50, Danio rerio (zebra fish), 96 Hour, > 100 mg/l
LC50, Oncorhynchus mykiss (rainbow trout), 96 Hour, > 100 mg/l, OECD Test Guideline 203
NOEC, Oncorhynchus mykiss (rainbow trout), 96 Hour, 50 mg/l

Acute toxicity to aquatic invertebrates
EC50, Daphnia magna (Water flea), 48 Hour, 69 mg/l, OECD Test Guideline 202

Acute toxicity to algae/aquatic plants
EC50, Pseudokirchneriella subcapitata (green algae), 72 Hour, > 100 mg/l, OECD Test Guideline 201
NOEC, Pseudokirchneriella subcapitata (green algae), 72 Hour, 100 mg/l

Dimethyl, methylhydrogen siloxane, dehydrogenated, reaction with hydroxydiethylamine

Acute toxicity to fish
No relevant data found.

C.I. Pigment Yellow 53

Acute toxicity to fish
LC50, Leuciscus idus (Golden orfe), 96 Hour, >10,000 mg/l, Method Not Specified.

Acute toxicity to aquatic invertebrates
EC50, Daphnia magna (Water flea), 48 Hour, >100 mg/l, Method Not Specified.

Acute toxicity to algae/aquatic plants
EC50, Algae (Scenedesmus subspicatus), 48 Hour, Not available, >100 mg/l, Method Not Specified.

Toxicity to bacteria
EC50, Pseudomonas putida, 0.5 Hour, >10,000 mg/l

Chronic toxicity to aquatic invertebrates
NOEC, Daphnia magna (Water flea), 21 d, > 1 mg/l

Magnesium carbonate

Acute toxicity to fish
Material is practically non-toxic to aquatic organisms on an acute basis (LC50/EC50/EL50/LL50 >100 mg/L in the most sensitive species tested).
For similar material(s):
LC50, Pimephales promelas (fathead minnow), static test, 96 Hour, 2,820 mg/l

Acute toxicity to aquatic invertebrates
For similar material(s):
LC50, water flea Daphnia magna, static test, 48 Hour, 140 mg/l

Acute toxicity to algae/aquatic plants
For similar material(s):
EC50, Desmodesmus subspicatus (green algae), static test, 72 Hour, Growth inhibition, > 100 mg/l, OECD Test Guideline 201
For similar material(s):
NOEC, Desmodesmus subspicatus (green algae), static test, 100 mg/l

N-ethylacetamide

Acute toxicity to fish
Material is practically non-toxic to aquatic organisms on an acute basis (LC50/EC50/EL50/LL50 >100 mg/L in the most sensitive species tested).
Based on data from similar materials
LC50, Leuciscus idus (Golden orfe), 96 Hour, 3,390 mg/l, DIN 38412

Acute toxicity to aquatic invertebrates
Based on data from similar materials
EC50, Daphnia magna (Water flea), 48 Hour, > 580 mg/l, DIN 38412

Acute toxicity to algae/aquatic plants
Based on data from similar materials
EC50, Desmodesmus subspicatus (green algae), 96 Hour, > 500 mg/l

Toxicity to bacteria
Based on data from similar materials
EC10, Pseudomonas putida, 17 Hour, > 10,000 mg/l, DIN 38 412 Part 8

Octamethyl Cyclotetrasiloxane

Acute toxicity to fish
Not expected to be acutely toxic to aquatic organisms.
No toxicity at the limit of solubility
LC50, Oncorhynchus mykiss (rainbow trout), flow-through, 96 Hour, > 0.022 mg/l
No toxicity at the limit of solubility
LC50, Cyprinodon variegatus (sheepshead minnow), flow-through, 14 d, > 0.0063 mg/l

Acute toxicity to aquatic invertebrates
No toxicity at the limit of solubility
EC50, Mysidopsis bahia (opossum shrimp), flow-through test, 96 Hour, > 0.0091 mg/l
No toxicity at the limit of solubility
EC50, Daphnia magna (Water flea), flow-through test, 48 Hour, > 0.015 mg/l

Acute toxicity to algae/aquatic plants
No toxicity at the limit of solubility
ErC50, Pseudokirchneriella subcapitata (green algae), 72 Hour, Growth rate, > 0.022 mg/l

Chronic toxicity to fish
No toxicity at the limit of solubility
NOEC, Oncorhynchus mykiss (rainbow trout), 93 d, >= 0.0044 mg/l

Chronic toxicity to aquatic invertebrates
No toxicity at the limit of solubility
NOEC, Daphnia magna (Water flea), 21 d, >= 0.0079 mg/l

Persistence and degradability

Limestone
Biodegradability: No relevant data found.

Methylvinyl bis(N-ethylacetamido)silane
Biodegradability: Based on stringent OECD test guidelines, this material cannot be considered as readily biodegradable; however, these results do not necessarily mean that the material is not biodegradable under environmental conditions.
Biodegradation: 62.66 %
Method: OECD Test Guideline 301B

Dimethyl, methylhydrogen siloxane, dehydrogenated, reaction with hydroxydiethylamine
Biodegradability: Material is not readily biodegradable according to OECD/EEC guidelines.
10-day Window: Fail For similar material(s):
Biodegradation: 0.43 %
Exposure time: 29 d
Method: OECD Test Guideline 301B

C.I. Pigment Yellow 53
Biodegradability: Not readily biodegraded.

Magnesium carbonate
Biodegradability: Biodegradability is not applicable to inorganic substances.

N-ethylacetamide
Biodegradability: Material is ultimately biodegradable (reaches > 70% mineralization in OECD test(s) for inherent biodegradability).
Based on data from similar materials
Biodegradation: 100 %
Exposure time: 6 d

Octamethyl Cyclotetrasiloxane
Biodegradability: Material is expected to biodegrade very slowly (in the environment). Fails to pass OECD/EEC tests for ready biodegradability.
10-day Window: Not applicable
Biodegradation: 3.7 %
Exposure time: 28 d
Method: OECD Test Guideline 310

Stability in Water (1/2-life)
Hydrolysis, DT50, 69.3 - 144 Hour, pH 7, Half-life Temperature 24.6 °C, OECD Test Guideline 111

Photodegradation
Atmospheric half-life: 16 d
Method: Estimated.

Bioaccumulative potential

Limestone
Bioaccumulation: No relevant data found.

Methylvinyl bis(N-ethylacetamido)silane
Bioaccumulation: No relevant data found.

Dimethyl, methylhydrogen siloxane, dehydrogenated, reaction with hydroxydiethylamine
Bioaccumulation: No relevant data found.

Magnesium carbonate
Bioaccumulation: No relevant data found.

N-ethylacetamide
Bioaccumulation: No relevant data found.

Octamethyl Cyclotetrasiloxane
Bioaccumulation: Bioconcentration potential is high (BCF > 3000 or Log Pow between 5 and 7).
Partition coefficient: n-octanol/water(log Pow): 6.49 Measured
Bioconcentration factor (BCF): 12,400 Pimephales promelas (fathead minnow) Measured

Mobility in soil

Limestone
No relevant data found.

Methylvinyl bis(N-ethylacetamido)silane
No relevant data found.

Dimethyl, methylhydrogen siloxane, dehydrogenated, reaction with hydroxydiethylamine
No relevant data found.

Magnesium carbonate
No relevant data found.

N-ethylacetamide
No relevant data found.

Octamethyl Cyclotetrasiloxane
Expected to be relatively immobile in soil (Koc > 5000).

13. DISPOSAL CONSIDERATIONS

Disposal methods: DO NOT DUMP INTO ANY SEWERS, ON THE GROUND, OR INTO ANY BODY OF WATER. All disposal practices must be in compliance with all Federal, State/Provincial and local laws and regulations. Regulations may vary in different locations. Waste characterizations and

compliance with applicable laws are the responsibility solely of the waste generator. AS YOUR SUPPLIER, WE HAVE NO CONTROL OVER THE MANAGEMENT PRACTICES OR MANUFACTURING PROCESSES OF PARTIES HANDLING OR USING THIS MATERIAL. THE INFORMATION PRESENTED HERE PERTAINS ONLY TO THE PRODUCT AS SHIPPED IN ITS INTENDED CONDITION AS DESCRIBED IN MSDS SECTION: Composition Information. FOR UNUSED & UNCONTAMINATED PRODUCT, the preferred options include sending to a licensed, permitted: Incinerator or other thermal destruction device. For additional information, refer to: Handling & Storage Information, MSDS Section 7 Stability & Reactivity Information, MSDS Section10 Regulatory Information, MSDS Section 15

Treatment and disposal methods of used packaging: Empty containers should be recycled or otherwise disposed of by an approved waste management facility. Waste characterizations and compliance with applicable laws are the responsibility solely of the waste generator. Do not re-use containers for any purpose.

14. TRANSPORT INFORMATION

DOT

Not regulated for transport

Classification for SEA transport (IMO-IMDG):

Not regulated for transport

Transport in bulk according to Annex I or II of MARPOL 73/78 and the IBC or IGC Code	Consult IMO regulations before transporting ocean bulk

Classification for AIR transport (IATA/ICAO):

Not regulated for transport

This information is not intended to convey all specific regulatory or operational requirements/information relating to this product. Transportation classifications may vary by container volume and may be influenced by regional or country variations in regulations. Additional transportation system information can be obtained through an authorized sales or customer service representative. It is the responsibility of the transporting organization to follow all applicable laws, regulations and rules relating to the transportation of the material.

15. REGULATORY INFORMATION

Superfund Amendments and Reauthorization Act of 1986 Title III (Emergency Planning and Community Right-to-Know Act of 1986) Sections 311 and 312
Serious eye damage or eye irritation
Reproductive toxicity

Superfund Amendments and Reauthorization Act of 1986 Title III (Emergency Planning and Community Right-to-Know Act of 1986) Section 313
The following components are subject to reporting levels established by SARA Title III, Section 313:

Components	CASRN
C.I. Pigment Yellow 53	8007-18-9
Cobalt titanite green spinel	68186-85-6

Comprehensive Environmental Response, Compensation, and Liability Act of 1980 (CERCLA) Section 103
This material does not contain any components with a CERCLA RQ.
Calculated RQ exceeds reasonably attainable upper limit.

Components	CASRN	RQ (RCRA Code)
Diethylamine	109-89-7	100 lbs RQ

Pennsylvania Right To Know
The following chemicals are listed because of the additional requirements of Pennsylvania law:

Components	CASRN
Limestone	1317-65-3
Polydimethylsiloxane hydroxy-terminated	70131-67-8
Titanium dioxide	13463-67-7
C.I. Pigment Yellow 53	8007-18-9
Cobalt titanite green spinel	68186-85-6
Aluminium	7429-90-5

California Prop. 65
WARNING: This product can expose you to chemicals including Titanium dioxide, C.I. Pigment Yellow 53, Quartz, Carbon black, Cobalt titanite green spinel, Silicon dioxide, which is/are known to the State of California to cause cancer. For more information go to www.P65Warnings.ca.gov.

United States TSCA Inventory (TSCA)
All components of this product are in compliance with the inventory listing requirements of the U.S. Toxic Substances Control Act (TSCA) Chemical Substance Inventory.

16. OTHER INFORMATION

Hazard Rating System
NFPA

Health	Flammability	Instability
2	1	0

HMIS

Health	Flammability	Physical Hazard
2*	1	0

* = Chronic Effects (See Hazards Identification)

Revision
Identification Number: 4111319 / A001 / Issue Date: 07/29/2019 / Version: 9.0
Most recent revision(s) are noted by the bold, double bars in left-hand margin throughout this document.

Legend

ACGIH	USA. ACGIH Threshold Limit Values (TLV)
OSHA Z-1	USA. Occupational Exposure Limits (OSHA) - Table Z-1 Limits for Air Contaminants
TWA	8-hour, time-weighted average
US WEEL	USA. Workplace Environmental Exposure Levels (WEEL)

Full text of other abbreviations

AICS - Australian Inventory of Chemical Substances; ASTM - American Society for the Testing of Materials; bw - Body weight; CERCLA - Comprehensive Environmental Response, Compensation, and Liability Act; CMR - Carcinogen, Mutagen or Reproductive Toxicant; DIN - Standard of the German Institute for Standardisation; DOT - Department of Transportation; DSL - Domestic Substances List (Canada); ECx - Concentration associated with x% response; EHS - Extremely Hazardous Substance; ELx - Loading rate associated with x% response; EmS - Emergency Schedule; ENCS - Existing and New Chemical Substances (Japan); ErCx - Concentration associated with x% growth rate response; ERG - Emergency Response Guide; GHS - Globally Harmonized System; GLP - Good Laboratory Practice; HMIS - Hazardous Materials Identification System; IARC - International Agency for Research on Cancer; IATA - International Air Transport Association; IBC - International Code for the Construction and Equipment of Ships carrying Dangerous Chemicals in Bulk; IC50 - Half maximal inhibitory concentration; ICAO - International Civil Aviation Organization; IECSC - Inventory of Existing Chemical Substances in China; IMDG - International Maritime Dangerous Goods; IMO - International Maritime Organization; ISHL - Industrial Safety and Health Law (Japan); ISO - International Organisation for Standardization; KECI - Korea Existing Chemicals Inventory; LC50 - Lethal Concentration to 50 % of a test population; LD50 - Lethal Dose to 50% of a test population (Median Lethal Dose); MARPOL - International Convention for the Prevention of Pollution from Ships; MSHA - Mine Safety and Health Administration; n.o.s. - Not Otherwise Specified; NFPA - National Fire Protection Association; NO(A)EC - No Observed (Adverse) Effect Concentration; NO(A)EL - No Observed (Adverse) Effect Level; NOELR - No Observable Effect Loading Rate; NTP - National Toxicology Program; NZIoC - New Zealand Inventory of Chemicals; OECD - Organization for Economic Co-operation and Development; OPPTS - Office of Chemical Safety and Pollution Prevention; PBT - Persistent, Bioaccumulative and Toxic substance; PICCS - Philippines Inventory of Chemicals and Chemical Substances; (Q)SAR - (Quantitative) Structure Activity Relationship; RCRA - Resource Conservation and Recovery Act; REACH - Regulation (EC) No 1907/2006 of the European Parliament and of the Council concerning the Registration, Evaluation, Authorisation and Restriction of Chemicals; RQ - Reportable Quantity; SADT - Self-Accelerating Decomposition Temperature; SARA - Superfund Amendments and Reauthorization Act; SDS - Safety Data Sheet; TCSI - Taiwan Chemical Substance Inventory; TSCA - Toxic Substances Control Act (United States); UN - United Nations; UNRTDG - United Nations Recommendations on the Transport of Dangerous Goods; vPvB - Very Persistent and Very Bioaccumulative

Information Source and References

This SDS is prepared by Product Regulatory Services and Hazard Communications Groups from information supplied by internal references within our company.

THE DOW CHEMICAL COMPANY urges each customer or recipient of this (M)SDS to study it carefully and consult appropriate expertise, as necessary or appropriate, to become aware of and understand the data contained in this (M)SDS and any hazards associated with the product. The information herein is provided in good faith and believed to be accurate as of the effective date shown above. However, no warranty, express or implied, is given. Regulatory requirements are subject to change and may differ between various locations. It is the buyer's/user's responsibility to ensure that his activities comply with all federal, state, provincial or local laws. The information presented here pertains only to the product as shipped. Since conditions for use of the product are not under the

control of the manufacturer, it is the buyer's/user's duty to determine the conditions necessary for the safe use of this product. Due to the proliferation of sources for information such as manufacturer-specific (M)SDSs, we are not and cannot be responsible for (M)SDSs obtained from any source other than ourselves. If you have obtained an (M)SDS from another source or if you are not sure that the (M)SDS you have is current, please contact us for the most current version.
US

GE5000 12C-Crtrg (0.730 Lbs-0.331 Kg)
Silicone Rubber Sealant

1. CHEMICAL PRODUCT AND COMPANY IDENTIFICATION

Manufactured By: **Waterford Plant**
260 Hudson River Rd
Waterford NY 12188
Revised: 09/10/2007
Preparer: PRODUCT STEWARDSHIP COMPLIANCE AND STANDARDS
CHEMTREC 1-800-424-9300

Chemical Family/Use: Silicone Rubber
Formula: Mixture

HMIS

Flammability:	0	Reactivity:	0	Health:	1

NFPA

Flammability:	1	Reactivity:	0	Health:	1

2. HAZARDS IDENTIFICATION

EMERGENCY OVERVIEW
WARNING! May be harmful if swallowed, inhaled or absorbed through skin. Irritating to eyes, respiratory system and skin. May cause central nervous system depression. May cause adverse reproductive effects. Adverse reproductive effects reported in animals.
Form: Solid Color: Translucent Odor: Ammonia

POTENTIAL HEALTH EFFECTS

INGESTION
May be harmful if swallowed. May cause central nervous system effects. May cause gastrointestinal irritation, nausea, vomiting, and diarrhea.

SKIN
Uncured product contact will irritate lips, gums and tongue. May cause skin irritation. May be absorbed through skin and produce effects as listed under "Ingestion".

INHALATION
Applies in uncured state. May cause respiratory tract irritation. May also cause other effects as listed under "Ingestion".

EYES
Eye irritation on contact with the uncured product.

MEDICAL CONDITIONS AGGRAVATED
Respiratory disorder Central nervous system disorders. Skin disorders.

SUBCHRONIC (TARGET ORGAN)
Liver; Central nervous system

CHRONIC EFFECTS / CARCINOGENICITY

This product or one of its ingredients present at 0.1% or more is NOT listed as a carcinogen or suspected carcinogen by NTP, IARC, or OSHA.

ROUTES OF EXPOSURE

Dermal; Eyes

3. COMPOSITION / INFORMATION ON INGREDIENTS

PRODUCT COMPOSITION	CAS REG NO.	WGT. %
A. HAZARDOUS		
DISTILLATES, PETROLEUM,HYDROTREATED	64742-47-8	1 - 5 %
Hexamethyldisilazane	999-97-3	1 - 5 %
Methyl trimethoxysilane	1185-55-3	1 - 5 %
B. NON-HAZARDOUS		
Methoxypolydimethylsiloxane	68037-58-1	60 - 90 %
Polydimethylsiloxane	63148-62-9	10 - 30 %
Treated Filler	68611-44-9	10 - 30 %

4. FIRST AID MEASURES

INGESTION

Do not induce vomiting. Slowly dilute with 1-2 glasses of water or milk and seek medical attention. Never give anything by mouth to an unconscious person.

SKIN

To clean from skin, remove completely with a dry cloth or paper towel, before washing with detergent and water.

INHALATION

If inhaled, remove to fresh air. If not breathing give artificial respiration using a barrier device. If breathing is difficult give oxygen. Get medical attention.

EYES

In case of contact, immediately flush eyes with plenty of water for at least 15 minutes and get medical attention if irritation persists.

NOTE TO PHYSICIAN
Treatment is symptomatic and supportive.

5. FIRE-FIGHTING MEASURES

FLASH POINT:	> 93.3 °C; 200 °F
METHOD:	estimated
IGNITION TEMPERATURE:	Unknown
FLAMMABLE LIMITS IN AIR - LOWER (%):	Not applicable
FLAMMABLE LIMITS IN AIR - UPPER (%):	Not applicable
SENSITIVITY TO MECHANICAL IMPACT:	No

SENSITIVITY TO STATIC DISCHARGE
Sensitivity to static discharge is not expected.

EXTINGUISHING MEDIA
All standard extinguishing agents are suitable.none

SPECIAL FIRE FIGHTING PROCEDURES
Firefighters must wear NIOSH/MSHA approved positive pressureself-contained breathing apparatus with full face mask and fullprotective clothing.

6. ACCIDENTAL RELEASE MEASURES

ACTION TO BE TAKEN IF MATERIAL IS RELEASED OR SPILLED
Wipe, scrape or soak up in an inert material and put in a container for disposal. Wash walking surfaces with detergent and water to reduce slipping hazard. Wear proper protective equipment as specified in the protective equipment section. Increase area ventilation.

7. HANDLING AND STORAGE

PRECAUTIONS TO BE TAKEN IN HANDLING AND STORAGE
Avoid contact with skin and eyes. Remove contact lenses before using sealant. Do not handle lenses until all sealant has been cleaned from the fingertips, nails and cuticles. Residual sealant may remain on fingers for several days and transfer to lenses and cause severe eye irritation. Use only in well-ventilated areas. Keep container closed when not in use. Product releases methanol during application and curing. Product releases ammonia during application and curing.

STORAGE
Store away from heat, sources of ignition, and incompatibles. Keep out of the reach of children.

8. EXPOSURE CONTROLS / PERSONAL PROTECTION

ENGINEERING CONTROLS

Eyewash stations; Showers; Ventilation and other forms of engineering controls are preferred for controlling exposures. Respiratory protection may be needed for non-routine or emergency situations.

RESPIRATORY PROTECTION

If exposure limits are exceeded or respiratory irritation is experienced, NIOSH/MSHA approved respiratory protection should be worn. Supplied air respirators may be required for non-routine or emergency situations. Respiratory protection must be provided in accordance with OSHA regulations (see 29CFR 1910.134).

PROTECTIVE GLOVES

Cloth gloves.

EYE AND FACE PROTECTION

Safety glasses

OTHER PROTECTIVE EQUIPMENT

Wear suitable protective clothing and eye/face protection.

Exposure Guidelines

Component	CAS RN	Source	Value

Absence of values indicates none found

PEL - OSHA Permissible Exposure Limit; TLV - ACGIH Threshold Limit Value; TWA - Time Weighted Average

OSHA revoked the Final Rule Limits of January 19, 1989 in response to the 11th Circuit Court of Appeals decision (AFL-CIO v. OSHA) effective June 30, 1993. See 29 CFR 1910.1000 (58 FR 35338).

9. PHYSICAL AND CHEMICAL PROPERTIES

BOILING POINT - C & F:	Not applicable
VAPOR PRESSURE (20 C) (MM HG):	Not applicable
FREEZING POINT:	Not applicable
MELTING POINT:	Not applicable
PHYSICAL STATE:	Solid
ODOR:	Ammonia
COLOR:	Translucent
EVAPORATION RATE (BUTYL ACETATE=1):	< 1
SPECIFIC GRAVITY (WATER=1):	ca. 1.05
DENSITY:	ca. 1.05 g/cm3
ACID / ALKALINITY (MEQ/G):	Unknown
pH:	Not applicable
VOLATILE ORGANIC CONTENT (VOL):	2.2 %(m)
SOLUBILITY IN WATER (20 C):	Negligible

SOLUBILITY IN ORGANIC SOLVENT (STATE SOLVENT):	Toluene
VOC EXCL. H2O & EXEMPTS (G/L):	27

10. STABILITY AND REACTIVITY

STABILITY
Stable

HAZARDOUS POLYMERIZATION
Will not occur.

HAZARDOUS THERMAL DECOMPOSITION / COMBUSTION PRODUCTS
Carbon monoxide; Carbon dioxide (CO2); Silicon dioxide.; Methanol; Formaldehyde; Ammonia

INCOMPATIBILITY (MATERIALS TO AVOID)
None known.

CONDITIONS TO AVOID
Vapor and/or liquid react with water to form ammonia. Applies in uncured state.

11. TOXICOLOGICAL INFORMATION

ACUTE ORAL
Remarks: Unknown

ACUTE DERMAL
Remarks: Unknown

ACUTE INHALATION
Remarks: Unknown

OTHER
None., Contains dibutyltin compound(s) - May impair fertility. May cause harm to unborn child.

SENSITIZATION
No data available

SKIN IRRITATION
No data available

EYE IRRITATION
No data available

MUTAGENICITY
Unknown

OTHER EFFECTS OF OVEREXPOSURE

This product contains methylpolysiloxanes which can generate formaldehyde at approximately 300 degrees Fahrenheit (150'C) and above, in atmospheres which contain oxygen. Formaldehyde is a skin and respiratory sensitizer, eye and throat irritant, acute toxicant, and potential cancer hazard. A MSDS for formaldehyde is available from Momentive., Methanol released during curing.

12. ECOLOGICAL INFORMATION

ECOTOXICITY

Ecotoxicological data for this product is not available.

DISTRIBUTION

No data available

CHEMICAL FATE

No data available

13. DISPOSAL CONSIDERATIONS

DISPOSAL METHOD

Disposal should be made in accordance with federal, state and local regulations.

14. TRANSPORT INFORMATION

Further Information: This product is not regarded as dangerous goods according to the national and international regulations on the transport of dangerous goods.

15. REGULATORY INFORMATION

Inventories

Canada DSL Inventory	y (Positive listing)
Korea Existing Chemicals Inventory (KECI)	y (Positive listing)
China Inventory of Existing Chemical Substances	y (Positive listing)
Australia Inventory of Chemical Substances (AICS)	y (Positive listing)
Philippines Inventory of Chemicals and Chemical	y (Positive listing)

Substances (PICCS)	
EU list of existing chemical substances	y (Positive listing)
Canada NDSL Inventory	n (Negative listing)
Japan Inventory of Existing & New Chemical Substances (ENCS)	n (Negative listing)
TSCA list	y (Positive listing)

For inventories that are marked as quantity restricted or special cases, please contact Momentive.

US Regulatory Information

SARA (311,312) HAZARD CLASS

Acute Health Hazard; Chronic Health Hazard

SARA (313) CHEMICALS

58-36-6, 10, 10'-oxybisphenoxarsine

Canadian Regulatory Information

WHMIS HAZARD CLASS

D2A VERY TOXIC MATERIALS, D2B TOXIC MATERIALS

Other

SCHDLE B/HTSUS: 3214.10 Mastic Based on Rubber

ECCN: EAR99

CALIFORNIA PROPOSITION 65

Warning! This product contains a chemical known to the State of California to cause cancer, birth defects or other reproductive harm.
58-36-6, 10,10'-OXYBISPHENOXARSINE. 108-88-3, Toluene.

16. OTHER INFORMATION

OTHER

C = ceiling limit NEGL = negligible EST = estimated NF = none found NA = not applicable UNKN = unknown NE = none established REC = recommended ND = none determined V = recommended by vendor SKN = skin TS = trade secret R = recommended MST = mist NT = not tested STEL = short term exposure limit ppm = parts per million ppb = parts per billion By-product= reaction by-product, TSCA inventory status not required under 40 CFR part 720.30(h-2)., These data are offered in good faith as typical values and not as product specifications. No warranty, either expressed or implied, is made. The recommended industrial hygiene and safe handling procedures are believed to be generally applicable. However, each user should review these recommendations in the specific context of the intended use and determine whether they are appropriate.

Safety Data Sheet - Gorilla Glue

Date Revised: 05/21/2015
Date Issued: 05/21/2015

Version: 1.0

FOR CHEMICAL EMERGENCY:
During Business Hours: (800) 966-3458 | Outside Business Hours: (800) 420-7186

According to Federal Register / Vol. 77, No. 58 / Monday, March 26, 2012 / Rules and Regulations

SECTION 1: IDENTIFICATION

Product Identifier

Product Name: Gorilla Glue
Synonyms: Polyurethane Adhesive

Intended Use of the Product

Consumer Adhesives for building, carpentry, or hobby projects.

Name, Address, and Telephone of the Responsible Party

Company
The Gorilla Glue Company
4550 Red Bank Expressway
Cincinnati, Ohio 45227
513-271-3300
www.gorillatough.com

Emergency Telephone Number

Emergency number : 1-800-420-7186 (Prosar)

SECTION 2: HAZARDS IDENTIFICATION

Classification of the Substance or Mixture

Classification (GHS-US)

Acute Tox. 4 (Inhalation:dust,mist)	H332
Skin Irrit. 2	H315
Eye Irrit. 2B	H320
Resp. Sens. 1	H334
Skin Sens. 1	H317
STOT SE 3	H335
STOT RE 1	H372

Full text of H-phrases: see section 16

Label Elements

GHS-US Labeling

Hazard Pictograms (GHS-US) :



GHS07 GHS08

Signal Word (GHS-US) : Danger

Hazard Statements (GHS-US) :
H315 - Causes skin irritation.
H317 - May cause an allergic skin reaction.
H320 - Causes eye irritation.
H332 - Harmful if inhaled.
H334 - May cause allergy or asthma symptoms or breathing difficulties if inhaled.
H335 - May cause respiratory irritation.
H372 - Causes damage to organs through prolonged or repeated exposure.

Precautionary Statements (GHS-US) :
P260 - Do not breathe vapors, mist, or spray.
P264 - Wash hands, forearms, and other exposed areas thoroughly after handling.
P270 - Do not eat, drink or smoke when using this product.
P271 - Use only outdoors or in a well-ventilated area.
P272 - Contaminated work clothing must not be allowed out of the workplace.
P280 - Wear protective gloves, protective clothing, and eye protection.

P284 - [In case of inadequate ventilation] wear respiratory protection.
P302+P352 - If on skin: Wash with plenty of water.
P304+P340 - If inhaled: Remove person to fresh air and keep at rest in a position comfortable for breathing.
P305+P351+P338 - If in eyes: Rinse cautiously with water for several minutes. Remove contact lenses, if present and easy to do. Continue rinsing.
P312 - Call a poison center or doctor if you feel unwell.
P333+P313 - If skin irritation or rash occurs: Get medical advice/attention.
P337+P313 - If eye irritation persists: Get medical advice/attention.
P342+P311 - If experiencing respiratory symptoms: Call a poison center or doctor.
P362+P364 - Take off contaminated clothing and wash it before reuse.
P403+P233 - Store in a well-ventilated place. Keep container tightly closed.
P405 - Store locked up.
P501 - Dispose of contents/container in accordance with local, regional, national, territorial, provincial, and international regulations.

Other Hazards

Other Hazards: May cause gastro-intestinal blockage if swallowed. Seek medical advice immediately. Contains isocyanates. May produce an allergic reaction.

Unknown Acute Toxicity (GHS-US) Not available

SECTION 3: COMPOSITION/INFORMATION ON INGREDIENTS

Mixture

Name	Product Identifier	% (w/w)	Classification (GHS-US)
Polyisocyanate Prepolymer based on MDI	(CAS No) 67815-87-6	40 - 70	Acute Tox. 4 (Inhalation:dust,mist), H332 Skin Irrit. 2, H315 Eye Irrit. 2B, H320 Resp. Sens. 1, H334 Skin Sens. 1, H317 STOT SE 3, H335 STOT RE 1, H372
Polymeric Diphenylmethane Diisocyanate (pMDI)	(CAS No) 9016-87-9	10 - 30	Acute Tox. 4 (Inhalation:dust,mist), H332 Skin Irrit. 2, H315 Eye Irrit. 2B, H320 Resp. Sens. 1, H334 Skin Sens. 1, H317 STOT SE 3, H335 STOT RE 1, H372
4,4'-Methylenediphenyl diisocyanate	(CAS No) 101-68-8	10 - 30	Acute Tox. 4 (Inhalation:dust,mist), H332 Skin Irrit. 2, H315 Eye Irrit. 2B, H320 Resp. Sens. 1, H334 Skin Sens. 1, H317 STOT SE 3, H335 STOT RE 2, H373
Diphenylmethane Diisocyanate (MDI) Mixed Isomers	(CAS No) 26447-40-5	1 - 5	Acute Tox. 4 (Inhalation:dust,mist), H332 Skin Irrit. 2, H315 Eye Irrit. 2B, H320 Resp. Sens. 1, H334 Skin Sens. 1, H317

			STOT SE 3, H335 STOT RE 1, H372
Additive	(CAS No) Trade Secret	0.1 - 1	Acute Tox. 4 (Dermal), H312 Skin Irrit. 2, H315 Eye Irrit. 2B, H320 Skin Sens. 1, H317 STOT SE 3, H335

Full text of H-phrases: see section 16

SECTION 4: FIRST AID MEASURES

Description of First Aid Measures

General: Never give anything by mouth to an unconscious person. If you feel unwell, seek medical advice (show the label if possible).

Inhalation: Using proper respiratory protection, immediately move the exposed person to fresh air. Seek medical attention immediately.

Skin Contact: Remove contaminated clothing. Gently wash with plenty of soap and water followed by rinsing with water for at least 15 minutes. Call a POISON CENTER or doctor/physician if you feel unwell. Wash contaminated clothing before reuse.

Eye Contact: Rinse cautiously with water for at least 15 minutes. Remove contact lenses, if present and easy to do. Continue rinsing. Obtain medical attention.

Ingestion: Rinse mouth. Do not induce vomiting. Immediately call a POISON CENTER or doctor/physician.

Most Important Symptoms and Effects Both Acute and Delayed

General: Harmful if inhaled. Exposure may produce an allergic reaction. Irritation to eyes, skin and respiratory tract. Inhalation may cause allergic respiratory reaction with asthma-like symptoms and difficulty breathing.

Inhalation: Harmful if inhaled. May cause allergy or asthma symptoms or breathing difficulties if inhaled. May cause respiratory irritation.

Skin Contact: Causes skin irritation. Exposure may produce an allergic reaction.

Eye Contact: Causes eye irritation.

Ingestion: Ingestion is likely to be harmful or have adverse effects. May cause gastro-intestinal blockage if swallowed.

Chronic Symptoms: May cause damage to organs through prolonged or repeated exposure.

Indication of Any Immediate Medical Attention and Special Treatment Needed

If medical advice is needed, have product container or label at hand.

SECTION 5: FIRE-FIGHTING MEASURES

Extinguishing Media

Suitable Extinguishing Media: Carbon dioxide, dry powder, and foam. In cases of large scale fires, alcohol-resistant foams are preferred. If water is used, it should be used in very large quantities. The reaction between water and isocyanate may be vigorous.

Unsuitable Extinguishing Media: Do not use a heavy water stream. Use of heavy stream of water may spread fire.

Special Hazards Arising From the Substance or Mixture

Fire Hazard: Not flammable.

Explosion Hazard: Product is not explosive.

Reactivity: Exothermic reaction with amines and alcohols; reacts with water forming heat, CO_2, and insoluble polyurea. The combined effect of CO_2 and heat can produce enough pressure to rupture a closed container.

Advice for Firefighters

Precautionary Measures Fire: Exercise caution when fighting any chemical fire.

Firefighting Instructions: Do not allow run-off from fire fighting to enter drains or water courses.

Protection During Firefighting: Do not enter fire area without proper protective equipment, including respiratory protection.

Hazardous Combustion Products: Fire will produce dense black smoke. Carbon oxides (CO, CO_2). Nitrogen compounds.

Reference to Other Sections

Refer to section 9 for flammability properties.

SECTION 6: ACCIDENTAL RELEASE MEASURES

Personal Precautions, Protective Equipment and Emergency Procedures

General Measures: Do not get in eyes, on skin, or on clothing.

For Non-Emergency Personnel

Protective Equipment: Use appropriate personal protection equipment (PPE).

Emergency Procedures: Evacuate unnecessary personnel.

For Emergency Personnel

Protective Equipment: Equip cleanup crew with proper protection.

Emergency Procedures: Upon arrival at the scene, a first responder is expected to recognize the presence of dangerous goods, protect oneself and the public, secure the area, and call for the assistance of trained personnel as soon as conditions permit.

Environmental Precautions

Prevent entry to sewers and public waters.

Methods and Material for Containment and Cleaning Up

For Containment: Absorb and/or contain spill with inert material, then place in suitable container.

Methods for Cleaning Up: Remove mechanically; cover remainders with wet absorbent material (e. g. sand, earth, sawdust). After approx. 15 min. transfer to waste container and do not seal (evolution of CO_2). Keep damp in a safe ventilated area for several days. Clean up spills immediately and dispose of waste safely.

Reference to Other Sections

See heading 8, Exposure Controls and Personal Protection. Concerning disposal elimination after cleaning, see item 13.

SECTION 7: HANDLING AND STORAGE

Precautions for Safe Handling

Additional Hazards When Processed: Do not breathe vapors, mists, or dusts. Use adequate ventilation to keep airborne isocyanate levels below the exposure limits. Wear respiratory protection if material is heated, sprayed, used in a confined space, or if the exposure limit is exceeded. Warning properties (irritation of the eyes, nose and throat or odor are not adequate to prevent overexposure from inhalation. This material can produce asthmatic sensitization upon either single inhalation exposure to a relatively high concentration or upon repeated inhalation exposures to lower concentrations. Individuals with lung or breathing problems or prior allergic reactions to isocyanates must not be exposed to vapor or spray mist. Avoid contact with skin and eyes. Wear appropriate eye and skin protection. Wash thoroughly after handling. Do not breathe smoke and gases created by overheating or burning this material. Decomposition products can be highly toxic and irritating.

Hygiene Measures: Handle in accordance with good industrial hygiene and safety procedures. Wash hands and other exposed areas with mild soap and water before eating, drinking, or smoking and again when leaving work.

Conditions for Safe Storage, Including Any Incompatibilities

Storage Conditions: Store in a dry, cool and well-ventilated place. Store away from incompatible materials. Keep product away from sources of alcohols, amines, or other materials that react with isocyanates. Keep out of reach of children and animals. Store in tightly closed containers to prevent moisture contamination. Do not reseal if contamination is suspected.

Incompatible Materials: Strong acids, strong bases, strong oxidizers. Amines. Alcohols. Copper and its alloys. Water.

Storage Temperature: 18 - 30 °C (64.4 - 86 °F)

Specific End Use(s)

Consumer Adhesives for building, carpentry, or hobby projects.

SECTION 8: EXPOSURE CONTROLS/PERSONAL PROTECTION

Control Parameters

For substances listed in section 3 that are not listed here, there are no established Exposure limits from the manufacturer, supplier, importer, or the appropriate advisory agency including: ACGIH (TLV), NIOSH (REL), OSHA (PEL), Canadian provincial governments, or the Mexican government.

Polymeric Diphenylmethane Diisocyanate (pMDI) (9016-87-9)		
Alberta	OEL TWA (mg/m³)	0.07 mg/m³
Alberta	OEL TWA (ppm)	0.005 ppm
4,4'-Methylenediphenyl diisocyanate (101-68-8)		
USA ACGIH	ACGIH TWA (ppm)	0.005 ppm
USA OSHA	OSHA PEL (Ceiling) (mg/m³)	0.2 mg/m³
USA OSHA	OSHA PEL (Ceiling) (ppm)	0.02 ppm
USA NIOSH	NIOSH REL (TWA) (mg/m³)	0.05 mg/m³
USA NIOSH	NIOSH REL (TWA) (ppm)	0.005 ppm
USA NIOSH	NIOSH REL (ceiling) (mg/m³)	0.2 mg/m³
USA NIOSH	NIOSH REL (ceiling) (ppm)	0.020 ppm
USA IDLH	US IDLH (mg/m³)	75 mg/m³
Alberta	OEL TWA (mg/m³)	0.05 mg/m³
Alberta	OEL TWA (ppm)	0.005 ppm
British Columbia	OEL Ceiling (ppm)	0.01 ppm
British Columbia	OEL TWA (ppm)	0.005 ppm
Manitoba	OEL TWA (ppm)	0.005 ppm
New Brunswick	OEL TWA (mg/m³)	0.051 mg/m³
New Brunswick	OEL TWA (ppm)	0.005 ppm
Newfoundland & Labrador	OEL TWA (ppm)	0.005 ppm
Nova Scotia	OEL TWA (ppm)	0.005 ppm
Ontario	OEL Ceiling (ppm)	0.02 ppm (designated substances regulation)
Ontario	OEL TWA (ppm)	0.005 ppm (designated substances regulation) 0.005 ppm (applies to workplaces to which the designated substances regulation does not apply)
Prince Edward Island	OEL TWA (ppm)	0.005 ppm
Québec	VEMP (mg/m³)	0.051 mg/m³
Québec	VEMP (ppm)	0.005 ppm
Saskatchewan	OEL STEL (ppm)	0.015 ppm
Saskatchewan	OEL TWA (ppm)	0.005 ppm
Yukon	OEL Ceiling (mg/m³)	0.2 mg/m³
Yukon	OEL Ceiling (ppm)	0.02 ppm
Diphenylmethane Diisocyanate (MDI) Mixed Isomers (26447-40-5)		
Mexico	OEL TWA (mg/m³)	0.2 mg/m³ 0.051 mg/m³
Mexico	OEL TWA (ppm)	0.02 ppm 0.005 ppm
USA OSHA	OSHA PEL (Ceiling) (mg/m³)	0.2 mg/m³
USA OSHA	OSHA PEL (Ceiling) (ppm)	0.02 ppm
Nunavut	OEL Ceiling (mg/m³)	0.2 mg/m³
Nunavut	OEL Ceiling (ppm)	0.02 ppm
Northwest Territories	OEL Ceiling (mg/m³)	0.2 mg/m³
Northwest Territories	OEL Ceiling (ppm)	0.02 ppm

Exposure Controls

Appropriate Engineering Controls: Emergency eye wash fountains and safety showers should be available in the immediate vicinity of any potential exposure. Provide sufficient ventilation to keep vapors below permissible exposure limit. Ensure all national/local regulations are observed.

Personal Protective Equipment: Protective clothing. Safety glasses. Gloves. Insufficient ventilation: wear respiratory protection.



Materials for Protective Clothing: Chemically resistant materials and fabrics.

Hand Protection: Wear chemically resistant protective gloves.

Eye Protection: Chemical goggles or safety glasses.

Skin and Body Protection: Wear suitable protective clothing.

Respiratory Protection: Use a NIOSH-approved respirator or self-contained breathing apparatus whenever exposure may exceed established Occupational Exposure Limits.

Other Information: When using, do not eat, drink or smoke.

SECTION 9: PHYSICAL AND CHEMICAL PROPERTIES

Information on Basic Physical and Chemical Properties

Physical State	:	Liquid
Appearance	:	Brown
Odor	:	Earthy, musty
Odor Threshold	:	Not available
pH	:	Not available
Evaporation Rate	:	Not available
Melting Point	:	0 °C (Calculated) (32 °F)
Freezing Point	:	Not available
Boiling Point	:	208 °C (406.4 °F)
Flash Point	:	> 93 °C Closed Cup (199.4 °F)
Auto-ignition Temperature	:	Not available
Decomposition Temperature	:	Not available
Flammability (solid, gas)	:	Not available
Lower Flammable Limit	:	Not available
Upper Flammable Limit	:	Not available
Vapor Pressure	:	< 0.0001 mm Hg @ 25 °C (77 °F)
Relative Vapor Density at 20 °C	:	Not available
Relative Density	:	1.138 g/cm^3
Specific gravity / density	:	1.138 g/cm^3 @ 20 °C (68 °F)
Specific Gravity	:	1.137 @ 25 °C (77 °F)
Solubility	:	Insoluble in water.
Partition Coefficient: N-Octanol/Water	:	Not available
Viscosity	:	Not available
Explosion Data – Sensitivity to Mechanical Impact	:	Not expected to present an explosion hazard due to mechanical impact.
Explosion Data – Sensitivity to Static Discharge	:	Not expected to present an explosion hazard due to static discharge.

SECTION 10: STABILITY AND REACTIVITY

Reactivity: Exothermic reaction with amines and alcohols; reacts with water forming heat, CO_2, and insoluble polyurea. The combined effect of CO_2 and heat can produce enough pressure to rupture a closed container.

Chemical Stability: Stable under recommended handling and storage conditions (see section 7).

Possibility of Hazardous Reactions: Hazardous polymerization will not occur.

Conditions to Avoid: Direct sunlight. Extremely high or low temperatures.

Incompatible Materials: Strong acids, strong bases, strong oxidizers. Alcohols. Copper and its alloys. Amines. Water.

Hazardous Decomposition Products: Carbon oxides (CO, CO_2). Nitrogen compounds. Cyanides. Isocyanates. Fire will produce dense black smoke.

SECTION 11: TOXICOLOGICAL INFORMATION

Information on Toxicological Effects - Product

Acute Toxicity: Inhalation:dust,mist: Harmful if inhaled.

LD50 and LC50 Data:

Gorilla Glue	
LD50 Oral Rat	> 2000 mg/kg
LD50 Dermal Rabbit	> 9400 mg/kg (OECD Test Guideline 402)
LC50 Inhalation Rat	0.49 mg/l/4h
ATE US (vapors)	0.49 mg/l/4h
ATE US (dust, mist)	0.49 mg/l/4h
Additional information	Toxicity data based on polymeric MDI (a mixture of monomers and higher molecular weight oligomers). For the inhalation study, note that the test atmosphere generated in the animal study is not representative of workplace environments, how the substance is placed on the market, and how it can reasonably be expected to be used. Therefore the test result cannot be directly applied for the purpose of assessing hazard. Based on expert judgment and the weight of evidence, a modified classification for acute inhalation toxicity is justified

Skin Corrosion/Irritation: Causes skin irritation. (Rabbit, slightly irritating)

Serious Eye Damage/Irritation: Causes eye irritation.

Respiratory or Skin Sensitization: May cause allergy or asthma symptoms or breathing difficulties if inhaled. May cause an allergic skin reaction.

Germ Cell Mutagenicity: Not classified (Genetic Toxicity in Vitro: Bacterial - gene mutation assay: negative (Salmonella typhimurium, Metabolic Activation: with/without))

Teratogenicity: Rat, female, inhalation, gestation days 6-15, 6 hrs/day, NOAEL (teratogenicity): 12 mg/m^3, NOAEL (maternal) 4 mg/m^3. No teratogenic effects observed at doses tested. Fetotoxicity seen only with maternal toxicity.

Carcinogenicity: Not classified

Specific Target Organ Toxicity (Repeated Exposure): Causes damage to organs through prolonged or repeated exposure.

Reproductive Toxicity: Not classified

Specific Target Organ Toxicity (Single Exposure): May cause respiratory irritation.

Aspiration Hazard: Not classified

Symptoms/Injuries After Inhalation: Harmful if inhaled. May cause allergy or asthma symptoms or breathing difficulties if inhaled. May cause respiratory irritation.

Symptoms/Injuries After Skin Contact: Causes skin irritation. Exposure may produce an allergic reaction.

Symptoms/Injuries After Eye Contact: Causes eye irritation.

Symptoms/Injuries After Ingestion: Ingestion is likely to be harmful or have adverse effects. May cause gastro-intestinal blockage if swallowed.

Chronic Symptoms: May cause damage to organs through prolonged or repeated exposure.

Gorilla Glue	
NOAEL (inhalation,rat,dust/mist/fume,90 days)	0.001 mg/l/6h/day Irritation to lungs and nasal cavity. 2 years, inhalation: NOAEL: 0.2, (rat, Male/Female, 6 hrs/day 5 days/week). Irritation to lungs and nasal cavity

Information on Toxicological Effects - Ingredient(s)

LD50 and LC50 Data:

Polyisocyanate Prepolymer based on MDI (67815-87-6)	
ATE US (dust, mist)	1.50 mg/l/4h

Polymeric Diphenylmethane Diisocyanate (pMDI) (9016-87-9)	
LD50 Oral Rat	49000 mg/kg
LD50 Dermal Rat	> 9400 mg/kg
LC50 Inhalation Rat	490 mg/m³ (Exposure time: 4 h)

4,4'-Methylenediphenyl diisocyanate (101-68-8)	
LD50 Oral Rat	31600 mg/kg
LD50 Dermal Rabbit	> 9400 mg/kg
ATE US (dust, mist)	1.50 mg/l/4h

Diphenylmethane Diisocyanate (MDI) Mixed Isomers (26447-40-5)	
LD50 Oral Rat	> 7400 mg/kg
LD50 Dermal Rabbit	> 6200 mg/kg
LC50 Inhalation Rat	0.369 mg/l/4h

Additive (Trade Secret)	
ATE US (dermal)	1,100.00 mg/kg body weight

Polymeric Diphenylmethane Diisocyanate (pMDI) (9016-87-9)	
IARC Group	3

4,4'-Methylenediphenyl diisocyanate (101-68-8)	
IARC Group	3

Diphenylmethane Diisocyanate (MDI) Mixed Isomers (26447-40-5)	
IARC Group	3

SECTION 12: ECOLOGICAL INFORMATION

Toxicity

Ecology - General: Ecotoxicity data based on polymeric MDI (a mixture of monomers and higher molecular weight oligomers).

Diphenylmethane Diisocyanate (MDI) Mixed Isomers (26447-40-5)	
NOEC (acute)	>= 1000 mg/kg (Exposure time: 14 Days - Species: Eisenia foetida [soil dry weight])

Persistence and Degradability

Gorilla Glue	
Persistence and Degradability	Biodegradation for this product was 0%, exposure time: 28 days, i.e. not degradable.
Biodegradation	0 % after 28 days

Bioaccumulative Potential

Gorilla Glue	
BCF fish 1	< 1 Oncorhynchus mykiss (rainbow trout), Exposure time: 112 d (does not bioaccumulate)

Diphenylmethane Diisocyanate (MDI) Mixed Isomers (26447-40-5)	
BCF Fish 1	3 - 14
Log Pow	4.5

Mobility in Soil Not available

Other Adverse Effects

Other Information: Avoid release to the environment.

SECTION 13: DISPOSAL CONSIDERATIONS

Sewage Disposal Recommendations: Do not dispose of waste into sewer.

Waste Disposal Recommendations: Dispose of waste material in accordance with all local, regional, national, provincial, territorial and international regulations.

SECTION 14: TRANSPORT INFORMATION

In Accordance with DOT	Not regulated for transport
In Accordance with IMDG	Not regulated for transport
In Accordance with IATA	Not regulated for transport
In Accordance with TDG	Not regulated for transport

SECTION 15: REGULATORY INFORMATION

US Federal Regulations

Gorilla Glue	
SARA Section 311/312 Hazard Classes	Immediate (acute) health hazard Delayed (chronic) health hazard

Polyisocyanate Prepolymer based on MDI (67815-87-6)	
Listed on the United States TSCA (Toxic Substances Control Act) inventory	

Polymeric Diphenylmethane Diisocyanate (pMDI) (9016-87-9)	
Listed on the United States TSCA (Toxic Substances Control Act) inventory Listed on United States SARA Section 313	
SARA Section 313 - Emission Reporting	1.0 %

4,4'-Methylenediphenyl diisocyanate (101-68-8)	
Listed on the United States TSCA (Toxic Substances Control Act) inventory Listed on United States SARA Section 313	
SARA Section 313 - Emission Reporting	1.0 %

Diphenylmethane Diisocyanate (MDI) Mixed Isomers (26447-40-5)
Listed on the United States TSCA (Toxic Substances Control Act) inventory

US State Regulations

Gorilla Glue
State or local regulations
This product contains a trace (ppm) amount of phenyl isocyanate (CAS # 103-71-9) and monochlorobenzene (CAS # 108-90-7) as impurities. California Prop 65: Warning! This product contains chemical(s) known to the State of California to be Carcinogenic.

Weight %	Component	CAS #
<1 ppm	Acetaldehyde	75-07-0
1-5 ppm	Furan	100-00-9
<1 ppm	Propylene Oxide	75-56-9

Polymeric Diphenylmethane Diisocyanate (pMDI) (9016-87-9)
U.S. - New Jersey - Right to Know Hazardous Substance List

4,4'-Methylenediphenyl diisocyanate (101-68-8)
U.S. - Massachusetts - Right To Know List U.S. - Pennsylvania - RTK (Right to Know) - Environmental Hazard List U.S. - Pennsylvania - RTK (Right to Know) List

Diphenylmethane Diisocyanate (MDI) Mixed Isomers (26447-40-5)
U.S. - Massachusetts - Right To Know List U.S. - New Jersey - Right to Know Hazardous Substance List

Canadian Regulations

Gorilla Glue	
WHMIS Classification	Class D Division 2 Subdivision A - Very toxic material causing other toxic effects Class D Division 2 Subdivision B - Toxic material causing other toxic effects




Polyisocyanate Prepolymer based on MDI (67815-87-6)	
Listed on the Canadian DSL (Domestic Substances List)	

Polymeric Diphenylmethane Diisocyanate (pMDI) (9016-87-9)	
Listed on the Canadian DSL (Domestic Substances List)	
WHMIS Classification	Class D Division 1 Subdivision A - Very toxic material causing immediate and serious toxic effects Class D Division 2 Subdivision A - Very toxic material causing other toxic effects Class D Division 2 Subdivision B - Toxic material causing other toxic effects

4,4'-Methylenediphenyl diisocyanate (101-68-8)	
Listed on the Canadian DSL (Domestic Substances List) Listed on the Canadian IDL (Ingredient Disclosure List)	
IDL Concentration 0.1 %	
WHMIS Classification	Class D Division 2 Subdivision A - Very toxic material causing other toxic effects Class D Division 2 Subdivision B - Toxic material causing other toxic effects

Diphenylmethane Diisocyanate (MDI) Mixed Isomers (26447-40-5)	
Listed on the Canadian DSL (Domestic Substances List)	
WHMIS Classification	Class D Division 1 Subdivision A - Very toxic material causing immediate and serious toxic effects Class D Division 2 Subdivision A - Very toxic material causing other toxic effects Class D Division 2 Subdivision B - Toxic material causing other toxic effects

This product has been classified in accordance with the hazard criteria of the Controlled Products Regulations (CPR) and the SDS contains all of the information required by CPR.

SECTION 16: OTHER INFORMATION, INCLUDING DATE OF PREPARATION OR LAST REVISION

Revision Date : 05/21/2015

Other Information : This document has been prepared in accordance with the SDS requirements of the OSHA Hazard Communication Standard 29 CFR 1910.1200.

GHS Full Text Phrases:

Acute Tox. 4 (Dermal)	Acute toxicity (dermal) Category 4
Acute Tox. 4 (Inhalation:dust,mist)	Acute toxicity (inhalation:dust,mist) Category 4
Eye Irrit. 2B	Serious eye damage/eye irritation Category 2B
Resp. Sens. 1	Respiratory sensitisation Category 1
Skin Irrit. 2	Skin corrosion/irritation Category 2
Skin Sens. 1	Skin sensitization Category 1
STOT RE 1	Specific target organ toxicity (repeated exposure) Category 1
STOT RE 2	Specific target organ toxicity (repeated exposure) Category 2
STOT SE 3	Specific target organ toxicity (single exposure) Category 3
H312	Harmful in contact with skin
H315	Causes skin irritation
H317	May cause an allergic skin reaction
H320	Causes eye irritation
H332	Harmful if inhaled
H334	May cause allergy or asthma symptoms or breathing difficulties if inhaled
H335	May cause respiratory irritation

H372	Causes damage to organs through prolonged or repeated exposure
H373	May cause damage to organs through prolonged or repeated exposure

Party Responsible for the Preparation of This Document

The Gorilla Glue Company
+1 513-271-3300

The information presented in this Safety Data Sheet was prepared by qualified personnel and to the best of our knowledge is true and accurate. The information and recommendations are furnished for this product with the understanding that the purchaser will independently determine the suitability of the product for this purpose. This data does not constitute a warranty, expressed or implied, statutory or otherwise, nor is it representation for which The Gorilla Glue Company assumes legal responsibility. The data is submitted for the user's information and consideration only. Any use of this product must be determined by the user to be in accordance with applicable federal, state, provincial and local laws and regulations.

Gorilla Glue NA GHS SDS

SAFETY DATA SHEET

Revision Date 01-Apr-2015 **Version** 1

1. IDENTIFICATION

Product identifier
Product Name HDX All-In-One Chlorinating Granules

Other means of identification
Product Code 26498947541
UN/ID no. UN3077
Registration Number(s) 5185-441

Recommended use of the chemical and restrictions on use
Recommended Use Swimming pool chemicals.
Uses advised against No information available

Details of the supplier of the safety data sheet

Supplier Address
Home Depot
2455 Paces Ferry Rd., N.W.
Atlanta, GA 30339

Manufacturer Address
KIK Pool Additives Inc
5160 East Airport Drive
Ontario, California 91761

Emergency telephone number
Emergency Telephone Chemtrec (Transportation) 1-800-424-9300, 703-527-3887
Poison Control Center (Medical) : (877) 800-5553

2. HAZARDS IDENTIFICATION

Classification

OSHA Regulatory Status
This chemical is considered hazardous by the 2012 OSHA Hazard Communication Standard (29 CFR 1910.1200)

Acute toxicity - Oral	Category 4
Serious eye damage/eye irritation	Category 2
Specific target organ toxicity (single exposure)	Category 3

Label elements

Emergency Overview

Warning

Hazard statements
Harmful if swallowed
Causes serious eye irritation
May cause respiratory irritation



Color white **Physical state** Solid **Odor** Chlorine

Precautionary Statements - Prevention

Wash face, hands and any exposed skin thoroughly after handling
Do not eat, drink or smoke when using this product
Wear protective gloves/protective clothing/eye protection/face protection
Avoid breathing dust/fume/gas/mist/vapors/spray
Use only outdoors or in a well-ventilated area

IF IN EYES: Rinse cautiously with water for several minutes. Remove contact lenses, if present and easy to do. Continue rinsing
If eye irritation persists: Get medical advice/attention
IF INHALED: Remove victim to fresh air and keep at rest in a position comfortable for breathing
Call a POISON CENTER or doctor/physician if you feel unwell
IF SWALLOWED: Call a POISON CENTER or doctor/physician if you feel unwell
Rinse mouth

Precautionary Statements - Storage
Store in a well-ventilated place. Keep container tightly closed
Store locked up

Precautionary Statements - Disposal
Dispose of contents/container to an approved waste disposal plant

Hazards not otherwise classified (HNOC)
Not applicable

Other Information
1% of the mixture consists of ingredient(s) of unknown toxicity

3. COMPOSITION/INFORMATION ON INGREDIENTS

Mixture

Chemical Name	CAS No.	Weight-%
Sodium dichloro-s-triazinetrione dihydrate	51580-86-0	99

.

4. FIRST AID MEASURES

Description of first aid measures

General advice — If symptoms persist, call a physician. Do not breathe dust/fume/gas/mist/vapors/spray. Do not get in eyes, on skin, or on clothing.

Eye contact — Immediately flush with plenty of water. After initial flushing, remove any contact lenses and continue flushing for at least 15 minutes. Keep eye wide open while rinsing. If symptoms persist, call a physician.

Skin contact — Wash off immediately with soap and plenty of water while removing all contaminated clothes and shoes. Wash contaminated clothing before reuse. Wash off immediately with plenty of water. If skin irritation persists, call a physician. Immediate medical attention is not required.

Inhalation — Remove to fresh air. If breathing is irregular or stopped, administer artificial respiration. Avoid direct contact with skin. Use barrier to give mouth-to-mouth resuscitation. Artificial respiration and/or oxygen may be necessary. Immediate medical attention is not required. Move to fresh air in case of accidental inhalation of vapors. If symptoms persist, call a physician.

Ingestion — Do NOT induce vomiting. Never give anything by mouth to an unconscious person. Have person sip a glass of water if able to swallow. Call a physician immediately.

Self-protection of the first aider Use personal protective equipment as required.

Most important symptoms and effects, both acute and delayed

Symptoms No information available.

Indication of any immediate medical attention and special treatment needed

Note to physicians Treat symptomatically. Probable mucosal damage may contraindicate the use of gastric lavage.

5. FIRE-FIGHTING MEASURES

Suitable extinguishing media
Flood fire area with water from a distance.

Unsuitable extinguishing media Do not use dry chemicals, carbon dioxide, or halogenated extinguishing agents.

Specific hazards arising from the chemical
Do not let the fire burn. Thermal decomposition can lead to release of toxic/corrosive gases and vapors.

Explosion data
Sensitivity to Mechanical Impact None.
Sensitivity to Static Discharge None.

Protective equipment and precautions for firefighters
As in any fire, wear self-contained breathing apparatus pressure-demand, MSHA/NIOSH (approved or equivalent) and full protective gear.

6. ACCIDENTAL RELEASE MEASURES

Personal precautions, protective equipment and emergency procedures

Personal precautions Use personal protective equipment as required. Evacuate personnel to safe areas. Keep people away from and upwind of spill/leak.

Environmental precautions

Environmental precautions Prevent entry into waterways, sewers, basements or confined areas. Do not flush into surface water or sanitary sewer system. Prevent further leakage or spillage if safe to do so. Prevent product from entering drains. See Section 12 for additional ecological information.

Methods and material for containment and cleaning up

Methods for containment Prevent further leakage or spillage if safe to do so. Do not add water to spilled material. Using clean dedicated equipment, sweep and scoop all spilled material, contaminated soil, and other contaminated material and place into clean dry containers for disposal. Do not close containers containing wet or damp material. They should be left open to disperse any hazardous gases that may form.

Methods for cleaning up Use personal protective equipment as required. Cover powder spill with plastic sheet or tarp to minimize spreading and keep powder dry. Take up mechanically, placing in appropriate containers for disposal. Avoid creating dust. Clean contaminated surface thoroughly. Pick up and transfer to properly labeled containers. Sweep up and shovel into suitable containers for disposal. After cleaning, flush away traces with water. Do not use floor sweeping compounds to clean up spills. Do not transport wet or damp material.

7. HANDLING AND STORAGE

Precautions for safe handling

Advice on safe handling

Use personal protective equipment as required. Avoid contact with skin, eyes or clothing. Wash contaminated clothing before reuse. Do not breathe dust/fume/gas/mist/vapors/spray. Do not eat, drink or smoke when using this product. Use with local exhaust ventilation. Do not mix with other chemicals. Keep/Store away from clothing/ combustible materials. Use only in well-ventilated areas.

Conditions for safe storage, including any incompatibilities

Storage Conditions

Keep container tightly closed in a dry and well-ventilated place. Keep out of the reach of children. Keep containers tightly closed in a cool, well-ventilated place. Keep in properly labeled containers.

Incompatible materials

Incompatible with strong acids and bases. Ammonia. Calcium hypochlorite. Combustible material. Do not mix with other swimming pool/spa chemicals in their concentrated forms. Reducing agent.

8. EXPOSURE CONTROLS/PERSONAL PROTECTION

Control parameters

Exposure Guidelines

This product, as supplied, does not contain any hazardous materials with occupational exposure limits established by the region specific regulatory bodies.

Appropriate engineering controls

Engineering Controls

Showers
Eyewash stations
Ventilation systems.

Individual protection measures, such as personal protective equipment

Eye/face protection

Wear safety glasses with side shields (or goggles). Tight sealing safety goggles.

Skin and body protection

Wear protective gloves and protective clothing.

Respiratory protection

If exposure limits are exceeded or irritation is experienced, NIOSH/MSHA approved respiratory protection should be worn. Positive-pressure supplied air respirators may be required for high airborne contaminant concentrations. Respiratory protection must be provided in accordance with current local regulations.

General Hygiene Considerations

When using do not eat, drink or smoke. Wash contaminated clothing before reuse. Regular cleaning of equipment, work area and clothing is recommended.

9. PHYSICAL AND CHEMICAL PROPERTIES

Information on basic physical and chemical properties

Physical state	Solid
Appearance	granules
Color	white
Odor	Chlorine
Odor threshold	No information available

Property	**Values**	**Remarks • Method**
pH	6 - 7	in 1% Solution
Melting point/freezing point	250 °C / 482 °F	Decomposes on heating
Boiling point / boiling range	No information available	
Flash point	No information available	
Evaporation rate	No information available	
Flammability (solid, gas)	No information available	
Flammability Limit in Air		
Upper flammability limit:	No information available	
Lower flammability limit:	No information available	
Vapor pressure	No information available	

Vapor density	No information available	
Specific Gravity	No information available	
Water solubility	Soluble in water	
Solubility in other solvents	No information available	
Partition coefficient	No information available	
Autoignition temperature	No information available	
Decomposition temperature	No information available	
Kinematic viscosity	No information available	
Dynamic viscosity	No information available	
Density	0.897-0.961	g/cm3
Bulk density	56 - 60	lbs / ft3
Explosive properties	No information available	
Oxidizing properties	No information available	

Other Information

Softening point	No information available
Molecular weight	No information available
VOC Content (%)	No information available

10. STABILITY AND REACTIVITY

Reactivity
No data available
Chemical stability
Stable under recommended storage conditions.
Possibility of Hazardous Reactions
None under normal processing.
Conditions to avoid
Extremes of temperature and direct sunlight. Protect from moisture. Do not mix with other chemicals.
Incompatible materials
Incompatible with strong acids and bases. Ammonia. Calcium hypochlorite. Combustible material. Do not mix with other swimming pool/spa chemicals in their concentrated forms. Reducing agent.
Hazardous Decomposition Products
Chlorine gas.

11. TOXICOLOGICAL INFORMATION

Information on likely routes of exposure

Inhalation	Irritating to respiratory system. May be fatal if inhaled.
Eye contact	Severely irritating to eyes. Corrosive to the eyes and may cause severe damage including blindness.
Skin contact	Irritating to skin. Contact with moist skin may cause skin burns. Causes burns. HARMFUL IF ABSORBED THROUGH SKIN.
Ingestion	Harmful if swallowed.

Information on toxicological effects

Symptoms No information available.

Delayed and immediate effects as well as chronic effects from short and long-term exposure

Sensitization	No information available.
Germ cell mutagenicity	No information available.
Carcinogenicity	No information available.

Reproductive toxicity	No information available.
STOT - single exposure	No information available.
STOT - repeated exposure	No information available.
Chronic toxicity	Avoid repeated exposure.
Aspiration hazard	No information available.

Numerical measures of toxicity - Product Information

Oral LD50	1823 mg/kg (rat)
Dermal LD50	> 5000 mg/kg (rat)

12. ECOLOGICAL INFORMATION

Ecotoxicity

Very toxic to aquatic life with long lasting effects

0% of the mixture consists of components(s) of unknown hazards to the aquatic environment

Persistence and degradability
No information available.

Bioaccumulation
No information available.

Mobility
No information available.

Other adverse effects No information available

13. DISPOSAL CONSIDERATIONS

Waste treatment methods

Disposal of wastes Disposal should be in accordance with applicable regional, national and local laws and regulations.

Contaminated packaging Do not reuse container. Refer to all federal, state and local regulations prior to disposal of container and unused contents by reuse, recycle or disposal.

14. TRANSPORT INFORMATION

Note: Limited quantity (LQ) exception is possible

DOT

UN/ID no.	UN3077
Proper shipping name	Environmentally hazardous substances, solid, n.o.s (Sodium dichloro-s-triazinetrione dIhydrate)
Hazard Class	9
Packing Group	III
Description	UN3077, Environmentally hazardous substances, solid, n.o.s. (Sodium dichloro-s-triazinetrione dihydrate), 9, III
Emergency Response Guide Number	171

IATA

UN/ID no.	UN3077

Proper shipping name	Environmentally hazardous substance, solid, n.o.s. (Sodium dichloro-s-triazinetrione dihydrate)
Hazard Class	9
Packing Group	III

IMDG

UN/ID no.	UN3077
Proper shipping name	Environmentally hazardous substance, solid, n.o.s. (Sodium dichloro-s-triazinetrione dihydrate)
Hazard Class	9
Packing Group	III
EmS-No.	F-A, S-F
Description	UN3077, Environmentally hazardous substances, solid, n.o.s. (Sodium dichloro-s-triazinetrione dihydrate), 9, III
Marine pollutant	This material meets the definition of a marine pollutant

15. REGULATORY INFORMATION

International Inventories

TSCA	Complies
DSL/NDSL	Complies

Legend:

TSCA - United States Toxic Substances Control Act Section 8(b) Inventory
DSL/NDSL - Canadian Domestic Substances List/Non-Domestic Substances List

US Federal Regulations

SARA 313

Section 313 of Title III of the Superfund Amendments and Reauthorization Act of 1986 (SARA). This product does not contain any chemicals which are subject to the reporting requirements of the Act and Title 40 of the Code of Federal Regulations, Part 372

SARA 311/312 Hazard Categories

Acute health hazard	Yes
Chronic Health Hazard	No
Fire hazard	No
Sudden release of pressure hazard	No
Reactive Hazard	No

CWA (Clean Water Act)

This product does not contain any substances regulated as pollutants pursuant to the Clean Water Act (40 CFR 122.21 and 40 CFR 122.42)

CERCLA

This material, as supplied, does not contain any substances regulated as hazardous substances under the Comprehensive Environmental Response Compensation and Liability Act (CERCLA) (40 CFR 302) or the Superfund Amendments and Reauthorization Act (SARA) (40 CFR 355). There may be specific reporting requirements at the local, regional, or state level pertaining to releases of this material

US State Regulations

California Proposition 65

This product does not contain any Proposition 65 chemicals

U.S. State Right-to-Know Regulations

Chemical Name	New Jersey	Massachusetts	Pennsylvania
Sodium dichloro-s-triazinetrione dihydrate	-	X	X

51580-86-0			

U.S. EPA Label Information

EPA Pesticide Registration Number 5185-441

EPA Statement

This chemical is a pesticide product registered by the Environmental Protection Agency and is subject to certain labeling requirements under federal pesticide law. These requirements differ from the classification criteria and hazard information required for safety data sheets, and for workplace labels of non-pesticide chemicals. Following is the hazard information as required on the pesticide label:

Difference between SDS and EPA Pesticide label

DANGER: Corrosive. Causes irreversible eye damage. May be fatal if inhaled. Harmful if swallowed or absorbed through skin. Do not get in eyes, on skin or on clothing. Do not breathe dust or vapor. Wear goggles, face shield or safety glasses. Wash thoroughly after handling. Remove contaminated clothing and wash before reuse.

16. OTHER INFORMATION, INCLUDING DATE OF PREPARATION OF THE LAST REVISION

NFPA	**Health hazards** 3	**Flammability** 0	**Instability** 1	**Physical and Chemical Properties** OX
HMIS	**Health hazards** 3	**Flammability** 0	**Physical hazards** 1	**Personal protection** X

Prepared By Regulatory Affairs
Revision Date 01-Apr-2015
Revision Note No information available

Disclaimer

The information provided in this Material Safety Data Sheet is correct to the best of our knowledge, information and belief at the date of its publication. The information given is designed only as a guidance for safe handling, use, processing, storage, transportation, disposal and release and is not to be considered a warranty or quality specification. The information relates only to the specific material designated and may not be valid for such material used in combination with any other materials or in any process, unless specified in the text.

End of Safety Data Sheet

SAFETY DATA SHEET

Revision Date 11-Nov-2015 **Version** 1

1. IDENTIFICATION

Product identifier
Product Name HDX Muriatic Acid

Other means of identification
Product UPC 59647-91161
Product Code 26458947372
UN/ID no. 1789

Recommended use of the chemical and restrictions on use
Recommended Use Swimming pool chemicals. Cleaning agent.
Uses advised against No information available

Details of the supplier of the safety data sheet
Distributor
Home Depot
2455 Paces Ferry Rd., N.W.
Atlanta, GA 30339

Emergency telephone number
Emergency Telephone Poison Control Center (Medical) : (866) 366-5048
Chemtrec (Transportation) 1-800-424-9300, 703-527-3887

2. HAZARDS IDENTIFICATION

Classification

OSHA Regulatory Status
This chemical is considered hazardous by the 2012 OSHA Hazard Communication Standard (29 CFR 1910.1200)

Acute toxicity - Oral	Category 4
Acute toxicity - Inhalation (Dusts/Mists)	Category 4
Skin corrosion/irritation	Category 1
Serious eye damage/eye irritation	Category 1
Specific target organ toxicity (single exposure)	Category 3
Corrosive to metals	Category 1

Label elements

Emergency Overview

Danger

Hazard statements
Harmful if swallowed
Causes severe skin burns and eye damage
Harmful if inhaled
May cause respiratory irritation. May cause drowsiness or dizziness
May be corrosive to metals



Color amber colorless to light amber	**Physical state** liquid	**Odor** Pungent

Precautionary Statements - Prevention
Wash face, hands and any exposed skin thoroughly after handling
Do not eat, drink or smoke when using this product
Use only outdoors or in a well-ventilated area
Do not breathe dust/fume/gas/mist/vapors/spray
Wear protective gloves/protective clothing/eye protection/face protection
Keep only in original container

Precautionary Statements - Response
Immediately call a POISON CENTER or doctor/physician
IF IN EYES: Rinse cautiously with water for several minutes. Remove contact lenses, if present and easy to do. Continue rinsing.
Immediately call a POISON CENTER or doctor/physician
IF ON SKIN (or hair): Remove/Take off immediately all contaminated clothing. Rinse skin with water/shower. Wash contaminated clothing before reuse
IF INHALED: Remove victim to fresh air and keep at rest in a position comfortable for breathing. Immediately call a POISON CENTER or doctor/physician
IF SWALLOWED: Call a POISON CENTER or doctor/physician if you feel unwell. Rinse mouth. Do NOT induce vomiting.
Absorb spillage to prevent material damage

Precautionary Statements - Storage
Store locked up. Store in a well-ventilated place. Keep container tightly closed. Store in corrosive resistant plastic container with a resistant inner liner.

Precautionary Statements - Disposal
Dispose of contents/container to an approved waste disposal plant

Hazards not otherwise classified (HNOC)
Not applicable

Other Information
0% of the mixture consists of ingredient(s) of unknown toxicity

3. COMPOSITION/INFORMATION ON INGREDIENTS

Mixture

Chemical Name	CAS No.	Weight-%
Hydrogen chloride	7647-01-0	25-35

4. FIRST AID MEASURES

Description of first aid measures

Eye contact Rinse thoroughly with plenty of water for at least 15 minutes, lifting lower and upper eyelids. Consult a physician.

Skin contact Wash skin with soap and water. If symptoms persist, call a physician.

Inhalation Remove to fresh air.

Ingestion Do NOT induce vomiting. Clean mouth with water and drink afterwards plenty of water. If symptoms persist, call a physician.

Most important symptoms and effects, both acute and delayed

Symptoms No information available.

Indication of any immediate medical attention and special treatment needed

Note to physicians Treat symptomatically.

5. FIRE-FIGHTING MEASURES

Suitable extinguishing media
Use extinguishing measures that are appropriate to local circumstances and the surrounding environment.

Unsuitable extinguishing media No information available.

Specific hazards arising from the chemical
No information available.

Explosion data
Sensitivity to Mechanical Impact None.
Sensitivity to Static Discharge None.

Protective equipment and precautions for firefighters
As in any fire, wear self-contained breathing apparatus pressure-demand, MSHA/NIOSH (approved or equivalent) and full protective gear.

6. ACCIDENTAL RELEASE MEASURES

Personal precautions, protective equipment and emergency procedures

Personal precautions Keep people away from and upwind of spill/leak. Avoid contact with skin, eyes or clothing. Use personal protective equipment as required. Ensure adequate ventilation, especially in confined areas.

Environmental precautions

Environmental precautions See Section 12 for additional ecological information.

Methods and material for containment and cleaning up

Methods for containment Prevent further leakage or spillage if safe to do so.

Methods for cleaning up Soak up with inert absorbent material (e.g. sand, silica gel, acid binder, universal binder, sawdust). Pick up and transfer to properly labeled containers.

7. HANDLING AND STORAGE

Precautions for safe handling

Advice on safe handling Handle in accordance with good industrial hygiene and safety practice. Do not mix with other chemicals.

Conditions for safe storage, including any incompatibilities

Storage Conditions Keep containers tightly closed in a dry, cool and well-ventilated place.

Incompatible materials Strong oxidizing agents, Bases, Metals.

8. EXPOSURE CONTROLS/PERSONAL PROTECTION

Control parameters

Exposure Guidelines .

Chemical Name	ACGIH TLV	OSHA PEL	NIOSH IDLH
Hydrogen chloride 7647-01-0	Ceiling: 2 ppm	(vacated) Ceiling: 5 ppm (vacated) Ceiling: 7 mg/m^3 Ceiling: 5 ppm Ceiling: 7 mg/m^3	IDLH: 50 ppm Ceiling: 5 ppm Ceiling: 7 mg/m^3

NIOSH IDLH Immediately Dangerous to Life or Health

Other Information Vacated limits revoked by the Court of Appeals decision in AFL-CIO v. OSHA, 965 F.2d 962 (11th Cir., 1992).

Appropriate engineering controls

Engineering Controls Showers
Eyewash stations
Ventilation systems.

Individual protection measures, such as personal protective equipment

Eye/face protection Wear safety glasses with side shields (or goggles).

Skin and body protection Wear protective gloves and protective clothing.

Respiratory protection If exposure limits are exceeded or irritation is experienced, NIOSH/MSHA approved respiratory protection should be worn. Positive-pressure supplied air respirators may be required for high airborne contaminant concentrations. Respiratory protection must be provided in accordance with current local regulations.

General Hygiene Considerations Handle in accordance with good industrial hygiene and safety practice.

9. PHYSICAL AND CHEMICAL PROPERTIES

Information on basic physical and chemical properties

Physical state	liquid		
Appearance	clear	**Odor**	Pungent
Color	amber, colorless to light amber	**Odor threshold**	No information available

Property	Values	Remarks • Method
pH	< 1	
Melting point/freezing point	No information available	
Boiling point / boiling range	No information available	
Flash point	No information available	
Evaporation rate	No information available	
Flammability (solid, gas)	No information available	
Flammability Limit in Air		
Upper flammability limit:	No information available	
Lower flammability limit:	No information available	
Vapor pressure	No information available	
Vapor density	No information available	
Specific Gravity	No information available	
Water solubility	No information available	
Solubility in other solvents	No information available	
Partition coefficient	No information available	
Autoignition temperature	No information available	
Decomposition temperature	No information available	
Kinematic viscosity	No information available	
Dynamic viscosity	No information available	
Density	No information available	
Bulk density	No information available	
Explosive properties	No information available	
Oxidizing properties	No information available	

Other Information

Softening point	No information available
Molecular weight	No information available
VOC Content (%)	No information available

10. STABILITY AND REACTIVITY

Reactivity
No data available
Chemical stability
Stable under recommended storage conditions.
Possibility of Hazardous Reactions
None under normal processing.
Conditions to avoid
Do not mix with other chemicals. Extremes of temperature and direct sunlight.
Incompatible materials
Strong oxidizing agents, Bases, Metals.
Hazardous Decomposition Products
None known based on information supplied.

11. TOXICOLOGICAL INFORMATION

Information on likely routes of exposure

Inhalation May be harmful if inhaled. May cause central nervous system depression with nausea, headache, dizziness, vomiting, and incoordination. May cause irritation of respiratory tract.

Eye contact Avoid contact with eyes. Risk of serious damage to eyes. May cause burns.

Skin contact Avoid contact with skin. May cause burns.

Ingestion May be fatal if swallowed. Can burn mouth, throat, and stomach. Ingestion causes burns of the upper digestive and respiratory tracts.

Chemical Name	Oral LD50	Dermal LD50	Inhalation LC50
Hydrogen chloride 7647-01-0	238 - 277 mg/kg (Rat)	> 5010 mg/kg (Rabbit)	= 1.68 mg/L (Rat) 1 h

Information on toxicological effects

Symptoms No information available.

Delayed and immediate effects as well as chronic effects from short and long-term exposure

Sensitization	No information available.
Germ cell mutagenicity	No information available.
Carcinogenicity	The table below indicates whether each agency has listed any ingredient as a carcinogen.

Chemical Name	ACGIH	IARC	NTP	OSHA
Hydrogen chloride 7647-01-0	-	Group 3	-	-

IARC (International Agency for Research on Cancer)
Not classifiable as a human carcinogen

Reproductive toxicity	No information available.
STOT - single exposure	No information available.
STOT - repeated exposure	No information available.
Target Organ Effects	Eyes, Respiratory system, Skin.
Aspiration hazard	No information available.

Numerical measures of toxicity - Product Information

The following values are calculated based on chapter 3.1 of the GHS document .

12. ECOLOGICAL INFORMATION

Ecotoxicity

0% of the mixture consists of components(s) of unknown hazards to the aquatic environment

Chemical Name	Algae/aquatic plants	Fish	Crustacea
Hydrogen chloride 7647-01-0	-	282: 96 h Gambusia affinis mg/L LC50 static	-

Persistence and degradability
No information available.

Bioaccumulation
No information available.

Mobility
No information available.

Other adverse effects No information available

13. DISPOSAL CONSIDERATIONS

Waste treatment methods

Disposal of wastes Disposal should be in accordance with applicable regional, national and local laws and regulations.

Contaminated packaging Do not reuse container. Refer to all federal, state and local regulations prior to disposal of container and unused contents by reuse, recycle or disposal.

14. TRANSPORT INFORMATION

DOT

UN/ID no. 1789
Proper shipping name HYDROCHLORIC ACID SOLUTION
Hazard Class 8
Packing Group II
Description UN1789 HYDROCHLORIC ACID SOLUTION, 8, II

IATA

UN/ID no. 1789
Proper shipping name HYDROCHLORIC ACID SOLUTION
Hazard Class 8
Packing Group II
Description UN1789 HYDROCHLORIC ACID SOLUTION, 8, II

IMDG

UN/ID no. 1789
Proper shipping name HYDROCHLORIC ACID SOLUTION
Hazard Class 8
Packing Group II
Description UN1789 HYDROCHLORIC ACID SOLUTION, 8, II

15. REGULATORY INFORMATION

International Inventories

TSCA	Complies
DSL/NDSL	Complies

Legend:

TSCA - United States Toxic Substances Control Act Section 8(b) Inventory
DSL/NDSL - Canadian Domestic Substances List/Non-Domestic Substances List

US Federal Regulations

SARA 313

Section 313 of Title III of the Superfund Amendments and Reauthorization Act of 1986 (SARA). This product contains a chemical or chemicals which are subject to the reporting requirements of the Act and Title 40 of the Code of Federal Regulations, Part 372

Chemical Name	SARA 313 - Threshold Values %
Hydrochloric Acid - 7647-01-0	1.0

SARA 311/312 Hazard Categories

Acute health hazard	Yes
Chronic Health Hazard	No
Fire hazard	No
Sudden release of pressure hazard	No
Reactive Hazard	No

CWA (Clean Water Act)

This product contains the following substances which are regulated pollutants pursuant to the Clean Water Act (40 CFR 122.21 and 40 CFR 122.42)

Chemical Name	CWA - Reportable Quantities	CWA - Toxic Pollutants	CWA - Priority Pollutants	CWA - Hazardous Substances
Hydrogen chloride 7647-01-0	5000 lb	-	-	X

CERCLA

This material, as supplied, contains one or more substances regulated as a hazardous substance under the Comprehensive Environmental Response Compensation and Liability Act (CERCLA) (40 CFR 302)

Chemical Name	Hazardous Substances RQs	CERCLA/SARA RQ	Reportable Quantity (RQ)
Hydrogen chloride 7647-01-0	5000 lb	5000 b	RQ 5000 b final RQ RQ 2270 kg final RQ

US State Regulations

California Proposition 65

This product does not contain any Proposition 65 chemicals

U.S. State Right-to-Know Regulations

Chemical Name	New Jersey	Massachusetts	Pennsylvania
Hydrogen chloride 7647-01-0	X	X	X

U.S. EPA Label Information

EPA Pesticide Registration Number This product does not contain any substances regulated as pesticides

16. OTHER INFORMATION, INCLUDING DATE OF PREPARATION OF THE LAST REVISION

NFPA	**Health hazards** 3	**Flammability** 0	**Instability** 1	**Physical and Chemical Properties** -
HMIS	**Health hazards** 3	**Flammability** 0	**Physical hazards** 1	**Personal protection** B

Prepared By	Regulatory Affairs
Revision Date	11-Nov-2015
Revision Note	No information available

Disclaimer

The information provided in this Material Safety Data Sheet is correct to the best of our knowledge, information and belief at the date of its publication. The information given is designed only as a guidance for safe handling, use, processing, storage, transportation, disposal and release and is not to be considered a warranty or quality specification. The information relates only to the specific material designated and may not be valid for such material used in combination with any other materials or in any process, unless specified in the text.

End of Safety Data Sheet

SAFETY DATA SHEET

Revision Date 22-Apr-2015 **Version** 1

1. IDENTIFICATION

Product identifier
Product Name HDX Super Shock 20,000 Gallons

Other means of identification
Product Code 26448948231

Recommended use of the chemical and restrictions on use
Recommended Use Swimming Pool Product.
Uses advised against Do not mix with other chemicals

Details of the supplier of the safety data sheet

Supplier Address
Home Depot
2455 Paces Ferry Rd., N.W.
Atlanta, GA 30339

Manufacturer Address
KIK Pool Additives Inc
5160 East Airport Drive
Ontario, California 91761

Emergency telephone number
Emergency Telephone Chemtrec (Transportation) 1-800-424-9300, 703-527-3887
Poison Control Center (Medical) : (877) 800-5553

2. HAZARDS IDENTIFICATION

Classification

OSHA Regulatory Status
This chemical is considered hazardous by the 2012 OSHA Hazard Communication Standard (29 CFR 1910.1200)

Acute toxicity - Oral	Category 4
Acute toxicity - Inhalation (Dusts/Mists)	Category 4
Serious eye damage/eye irritation	Category 2
Reproductive toxicity	Category 2
Specific target organ toxicity (single exposure)	Category 3

Label elements

Emergency Overview

Warning

Hazard statements
Causes serious eye irritation
Suspected of damaging fertility or the unborn child
May cause respiratory irritation
Harmful if swallowed



Color white **Physical state** Solid **Odor** Chlorine

Precautionary Statements - Prevention
Obtain special instructions before use
Do not handle until all safety precautions have been read and understood
Use personal protective equipment as required
Wash face, hands and any exposed skin thoroughly after handling
Do not eat, drink or smoke when using this product
Avoid breathing dust/fume/gas/mist/vapors/spray
Use only outdoors or in a well-ventilated area

Precautionary Statements - Response
IF exposed or concerned: Get medical advice/attention
IF IN EYES: Rinse cautiously with water for several minutes. Remove contact lenses, if present and easy to do. Continue rinsing
If eye irritation persists: Get medical advice/attention
IF INHALED: Remove victim to fresh air and keep at rest in a position comfortable for breathing
IF SWALLOWED: Call a POISON CENTER or doctor/physician if you feel unwell
Rinse mouth

Precautionary Statements - Storage
Store locked up
Store in a well-ventilated place. Keep container tightly closed

Precautionary Statements - Disposal
Dispose of contents/container to an approved waste disposal plant

Hazards not otherwise classified (HNOC)
Not applicable

Other Information
1.36% of the mixture consists of ingredient(s) of unknown toxicity

3. COMPOSITION/INFORMATION ON INGREDIENTS

Mixture

Chemical Name	CAS No.	Weight-%
Trichloro-s-triazinetrione	87-90-1	67.0
sodium carbonate	497-19-8	7 - 13*
boric acid	10043-35-3	7 - 13*

*The exact percentage (concentration) of composition has been withheld as a trade secret.

4. FIRST AID MEASURES

Description of first aid measures

General advice If symptoms persist, call a physician. Do not breathe dust/fume/gas/mist/vapors/spray. Do not get in eyes, on skin, or on clothing.

Eye contact Immediately flush with plenty of water. After initial flushing, remove any contact lenses and continue flushing for at least 15 minutes. Keep eye wide open while rinsing. If symptoms persist, call a physician.

Skin contact Wash off immediately with soap and plenty of water while removing all contaminated clothes and shoes. Wash contaminated clothing before reuse. Wash off immediately with plenty of water. If skin irritation persists, call a physician. Immediate medical attention is not required.

Inhalation Remove to fresh air. If not breathing, give artificial respiration. Avoid direct contact with skin. Use barrier to give mouth-to-mouth resuscitation. Artificial respiration and/or oxygen may be

necessary. Move to fresh air in case of accidental inhalation of vapors. If symptoms persist, call a physician.

Ingestion Do NOT induce vomiting. Never give anything by mouth to an unconscious person. Have person sip a glass of water if able to swallow. Call a physician immediately.

Self-protection of the first aider Use personal protective equipment as required. Avoid contact with skin, eyes or clothing.

Most important symptoms and effects, both acute and delayed

Symptoms No information available.

Indication of any immediate medical attention and special treatment needed

Note to physicians Treat symptomatically. Probable mucosal damage may contraindicate the use of gastric lavage.

5. FIRE-FIGHTING MEASURES

Suitable extinguishing media
Flood fire area with water from a distance.

Unsuitable extinguishing media Do not use dry chemicals, carbon dioxide, or halogenated extinguishing agents.

Specific hazards arising from the chemical
Do not let the fire burn. Thermal decomposition can lead to release of toxic/corrosive gases and vapors.

Explosion data
Sensitivity to Mechanical Impact None.
Sensitivity to Static Discharge None.

Protective equipment and precautions for firefighters
As in any fire, wear self-contained breathing apparatus pressure-demand, MSHA/NIOSH (approved or equivalent) and full protective gear.

6. ACCIDENTAL RELEASE MEASURES

Personal precautions, protective equipment and emergency procedures

Personal precautions Use personal protective equipment as required. Keep people away from and upwind of spill/leak. Evacuate personnel to safe areas.

Environmental precautions

Environmental precautions Prevent further leakage or spillage if safe to do so. Prevent product from entering drains. Do not flush into surface water or sanitary sewer system. See Section 12 for additional ecological information.

Methods and material for containment and cleaning up

Methods for containment Prevent further leakage or spillage if safe to do so. Do not add water to spilled material. Using clean dedicated equipment, sweep and scoop all spilled material, contaminated soil, and other contaminated material and place into clean dry containers for disposal. Do not close containers containing wet or damp material. They should be left open to disperse any hazardous gases that may form.

Methods for cleaning up Use personal protective equipment as required. Cover powder spill with plastic sheet or tarp to minimize spreading and keep powder dry. Take up mechanically, placing in appropriate containers for disposal. Avoid creating dust. Clean contaminated surface thoroughly. Soak up with inert absorbent material. Dam up. Pick up and transfer to properly labeled containers. Sweep up and shovel into suitable containers for disposal. After cleaning, flush away traces with water. Do not use floor sweeping compounds to clean up spills. Do not

transport wet or damp material.

7. HANDLING AND STORAGE

Precautions for safe handling

Advice on safe handling Use personal protective equipment as required. Avoid contact with skin, eyes or clothing. Wash contaminated clothing before reuse. Do not breathe dust/fume/gas/mist/vapors/spray. Do not eat, drink or smoke when using this product. Use with local exhaust ventilation. Do not mix with other chemicals. Keep/Store away from clothing/ combustible materials. Wash thoroughly after handling. Use only in well-ventilated areas.

Conditions for safe storage, including any incompatibilities

Storage Conditions Keep container tightly closed in a dry and well-ventilated place. Keep out of the reach of children. Keep containers tightly closed in a cool, well-ventilated place. Keep in properly labeled containers.

Incompatible materials Incompatible with strong acids and bases. Ammonia. Calcium hypochlorite. Combustible material. Do not mix with other swimming pool/spa chemicals in their concentrated forms. Reducing agent.

8. EXPOSURE CONTROLS/PERSONAL PROTECTION

Control parameters

Exposure Guidelines .

Chemical Name	ACGIH TLV	OSHA PEL	NIOSH IDLH
boric acid 10043-35-3	STEL: 6 mg/m³ inhalable fraction TWA: 2 mg/m³ inhalable fraction	-	-

NIOSH IDLH Immediately Dangerous to Life or Health

Other Information Vacated limits revoked by the Court of Appeals decision in AFL-CIO v. OSHA, 965 F.2d 962 (11th Cir., 1992).

Appropriate engineering controls

Engineering Controls Showers
Eyewash stations
Ventilation systems.

Individual protection measures, such as personal protective equipment

Eye/face protection Wear safety glasses with side shields (or goggles).

Skin and body protection Wear protective gloves and protective clothing.

Respiratory protection If exposure limits are exceeded or irritation is experienced, NIOSH/MSHA approved respiratory protection should be worn. Positive-pressure supplied air respirators may be required for high airborne contaminant concentrations. Respiratory protection must be provided in accordance with current local regulations.

General Hygiene Considerations When using do not eat, drink or smoke. Regular cleaning of equipment, work area and clothing is recommended. Avoid contact with skin, eyes or clothing. Wash hands thoroughly after handling. Keep away from food, drink and animal feeding stuffs.

9. PHYSICAL AND CHEMICAL PROPERTIES

Information on basic physical and chemical properties

Physical state Solid

Appearance	powder, granules	**Odor**	Chlorine
Color	white	**Odor threshold**	No information available

Property	**Values**	**Remarks • Method**	
pH	2.7 - 2.9	in 1% Solution	
Melting point/freezing point	225 °C / 437 °F	Decomposes on heating	
Boiling point / boiling range	No information available		
Flash point	No information available		
Evaporation rate	No information available		
Flammability (solid, gas)	No information available		
Flammability Limit in Air			
Upper flammability limit:	No information available		
Lower flammability limit:	No information available		
Vapor pressure	No information available		
Vapor density	No information available		
Specific Gravity	No information available		
Water solubility	Soluble in water		
Solubility in other solvents	No information available		
Partition coefficient	No information available		
Autoignition temperature	No information available		
Decomposition temperature	No information available		
Kinematic viscosity	No information available		
Dynamic viscosity	No information available		
Density	1.16 - 1.9	g/cm3	
Bulk density	No information available		
Explosive properties	No information available		
Oxidizing properties	No information available		

Other Information

Softening point	No information available
Molecular weight	No information available
VOC Content (%)	No information available

10. STABILITY AND REACTIVITY

Reactivity
No data available
Chemical stability
Stable under recommended storage conditions.
Possibility of Hazardous Reactions
None under normal processing.
Conditions to avoid
Extremes of temperature and direct sunlight. Protect from moisture. Do not mix with other chemicals.
Incompatible materials
Incompatible with strong acids and bases. Ammonia. Calcium hypochlorite. Combustible material. Do not mix with other swimming pool/spa chemicals in their concentrated forms. Reducing agent.
Hazardous Decomposition Products
Chlorine gas.

11. TOXICOLOGICAL INFORMATION

Information on likely routes of exposure

Inhalation	Irritating to respiratory system.
Eye contact	Severely irritating to eyes.
Skin contact	Irritating to skin. Contact with moist skin may cause skin burns.
Ingestion	Harmful if swallowed.

Chemical Name	Oral LD50	Dermal LD50	Inhalation LC50
Trichloro-s-triazinetrione 87-90-1	= 406 mg/kg (Rat)	> 2000 mg/kg (Rabbit)	> 50 mg/L (Rat) 1 h
sodium carbonate 497-19-8	= 4090 mg/kg (Rat)	-	= 2300 mg/m³ (Rat) 2 h
boric acid 10043-35-3	= 2660 mg/kg (Rat)	> 2000 mg/kg (Rabbit)	> 0.16 mg/L (Rat) 4 h

Information on toxicological effects

Symptoms No information available.

Delayed and immediate effects as well as chronic effects from short and long-term exposure

Sensitization No information available.
Germ cell mutagenicity No information available.
Carcinogenicity No ingredient of this product present at levels greater than or equal to 0.1% is identified as probable, possible or confirmed human carcinogen by IARC, OSHA, and NTP.

Reproductive toxicity This product contains a boron compound. This boron compound when fed to test animals at very high doses has shown reproductive and developmental toxicity. When this product is used according to label directions, the boron compound in this product does not represent a practical risk to humans.
STOT - single exposure No information available.
STOT - repeated exposure No information available.
Chronic toxicity Avoid repeated exposure.
Aspiration hazard No information available.

Numerical measures of toxicity - Product Information

The following values are calculated based on chapter 3.1 of the GHS document .

12. ECOLOGICAL INFORMATION

Ecotoxicity

Very toxic to aquatic life with long lasting effects

1.39943% of the mixture consists of components(s) of unknown hazards to the aquatic environment

Chemical Name	Algae/aquatic plants	Fish	Crustacea
Trichloro-s-triazinetrione 87-90-1	-	0.13 - 0.5: 96 h Lepomis macrochirus mg/L LC50 static 0.06 - 0.11: 96 h Oncorhynchus mykiss mg/L LC50 static	0.21: 48 h Daphnia magna mg/L EC50 0.16 - 0.18: 48 h Daphnia magna mg/L EC50 Static
sodium carbonate 497-19-8	242: 120 h Nitzschia mg/L EC50	300: 96 h Lepomis macrochirus mg/L LC50 static 310 - 1220: 96 h Pimephales promelas mg/L LC50 static	265: 48 h Daphnia magna mg/L EC50
boric acid 10043-35-3	-	1020: 72 h Carassius auratus mg/L LC50 flow-through	115 - 153: 48 h Daphnia magna mg/L EC50

Persistence and degradability
No information available.

Bioaccumulation
No information available.

Mobility
No information available.

Chemical Name	Partition coefficient
boric acid 10043-35-3	-0.757

Other adverse effects No information available

13. DISPOSAL CONSIDERATIONS

Waste treatment methods

Disposal of wastes Disposal should be in accordance with applicable regional, national and local laws and regulations.

Contaminated packaging Do not reuse container. Refer to all federal, state and local regulations prior to disposal of container and unused contents by reuse, recycle or disposal.

14. TRANSPORT INFORMATION

DOT Not regulated

IATA

UN/ID no.	UN3077
Proper shipping name	Environmentally hazardous substance, solid, n.o.s. (Trichloro-s-triazinetrione)
Hazard Class	9
Packing Group	III
Description	UN3077 Environmentally hazardous substances, solid, n.o.s. (Trichloro-s-triazinetrione), 9, III

IMDG

UN/ID no.	UN3077
Proper shipping name	Environmentally hazardous substance, solid, n.o.s. (Trichloro-s-triazinetrione)
Hazard Class	9
Packing Group	III
Description	UN3077 Environmentally hazardous substances, solid, n.o.s. (Trichloro-s-triazinetrione), 9, III
Marine pollutant	This material meets the definition of a marine pollutant

15. REGULATORY INFORMATION

International Inventories

TSCA	Complies
DSL/NDSL	Complies

Legend:

TSCA - United States Toxic Substances Control Act Section 8(b) Inventory
DSL/NDSL - Canadian Domestic Substances List/Non-Domestic Substances List

US Federal Regulations

SARA 313

Section 313 of Title III of the Superfund Amendments and Reauthorization Act of 1986 (SARA). This product does not contain any chemicals which are subject to the reporting requirements of the Act and Title 40 of the Code of Federal Regulations, Part 372

SARA 311/312 Hazard Categories

Acute health hazard	Yes
Chronic Health Hazard	Yes
Fire hazard	No
Sudden release of pressure hazard	No
Reactive Hazard	No

CWA (Clean Water Act)
This product does not contain any substances regulated as pollutants pursuant to the Clean Water Act (40 CFR 122.21 and 40 CFR 122.42)

CERCLA
This material, as supplied, does not contain any substances regulated as hazardous substances under the Comprehensive Environmental Response Compensation and Liability Act (CERCLA) (40 CFR 302) or the Superfund Amendments and Reauthorization Act (SARA) (40 CFR 355). There may be specific reporting requirements at the local, regional, or state level pertaining to releases of this material

US State Regulations

California Proposition 65
This product contains no listed substances known to the state of California to cause cancer, birth defects or other reproductive harm, at levels that would require a warning under the statute.

U.S. State Right-to-Know Regulations

Chemical Name	New Jersey	Massachusetts	Pennsylvania
Trichloro-s-triazinetrione 87-90-1	X	X	X

U.S. EPA Label Information
EPA Pesticide Registration Number 7616-78
EPA Statement
This chemical is a pesticide product registered by the Environmental Protection Agency and is subject to certain labeling requirements under federal pesticide law. These requirements differ from the classification criteria and hazard information required for safety data sheets, and for workplace labels of non-pesticide chemicals. Following is the hazard information as required on the pesticide label:
Difference between SDS and EPA Pesticide label
DANGER: CORROSIVE: Causes irreversible eye damage and skin burns. May be fatal if absorbed through skin. May be fatal if inhaled. Do not breathe dust or spray mists. Irritating to nose and throat. Harmful if swallowed. Do not get in eyes, on skin, or on clothing. Wear goggles or face shield, protective clothing and rubber gloves when handling this product. Wash thoroughly with soap and water after handling and before eating, drinking, chewing gum, using tobacco, or using the toilet. Remove contaminated clothing and wash before reuse.

16. OTHER INFORMATION, INCLUDING DATE OF PREPARATION OF THE LAST REVISION

NFPA	**Health hazards** 3	**Flammability** 0	**Instability** 2	**Physical and Chemical Properties** OX
HMIS	**Health hazards** 3*	**Flammability** 0	**Physical hazards** 2	**Personal protection** X

Prepared By Regulatory Affairs
Revision Date 22-Apr-2015
Revision Note No information available
Disclaimer
The information provided in this Material Safety Data Sheet is correct to the best of our knowledge, information and belief at the date of its publication. The information given is designed only as a guidance for safe handling, use, processing, storage, transportation, disposal and release and is not to be considered a warranty or quality specification. The information relates only to the specific material designated and may not be valid for such material used in combination with any other materials or in any process, unless specified in the text.

End of Safety Data Sheet

HALLIBURTON

MATERIAL SAFETY DATA SHEET

Product Trade Name: **HOLEPLUG® 3/8**

Revision Date: 06-Jan-2005

1. CHEMICAL PRODUCT AND COMPANY IDENTIFICATION

Product Trade Name: HOLEPLUG® 3/8
Synonyms: None
Chemical Family: Mineral
Application: Fluid Loss Additive

Manufacturer/Supplier
Baroid Drilling Fluids
a Product Service Line of Halliburton Energy Services, Inc.
P.O. Box 1675
Houston, TX 77251
Telephone: (281) 871-4000
Emergency Telephone: (281) 575-5000

Prepared By
Chemical Compliance
Telephone: 1-580-251-4335

2. COMPOSITION/INFORMATION ON INGREDIENTS

SUBSTANCE	CAS Number	PERCENT	ACGIH TLV-TWA	OSHA PEL-TWA
Crystalline silica, cristobalite	14464-46-1	0 - 1%	0.05 mg/m^3	1/2 x $\frac{10\ mg/m^3}{\%SiO2 + 2}$
Crystalline silica, tridymite	15468-32-3	0 - 1%	0.05 mg/m^3	1/2 x $\frac{10\ mg/m^3}{\%SiO2 + 2}$
Crystalline silica, quartz	14808-60-7	0 - 5%	0.05 mg/m^3	$\frac{10\ mg/m^3}{\%SiO2 + 2}$
Bentonite	1302-78-9	60 - 100%	Not applicable	Not applicable

More restrictive exposure limits may be enforced by some states, agencies, or other authorities.

3. HAZARDS IDENTIFICATION

Hazard Overview

CAUTION! - ACUTE HEALTH HAZARD
May cause eye and respiratory irritation.

DANGER! - CHRONIC HEALTH HAZARD
Breathing crystalline silica can cause lung disease, including silicosis and lung cancer. Crystalline silica has also been associated with scleroderma and kidney disease.

This product contains quartz, cristobalite, and/or tridymite which may become airborne without a visible cloud. Avoid breathing dust. Avoid creating dusty conditions. Use only with adequate ventilation to keep exposures below recommended exposure limits. Wear a NIOSH certified, European Standard EN 149, or equivalent respirator when using this product. Review the Material Safety Data Sheet (MSDS) for this product, which has been provided to your employer.

4. FIRST AID MEASURES

Inhalation If inhaled, remove from area to fresh air. Get medical attention if respiratory irritation develops or if breathing becomes difficult.

Skin Wash with soap and water. Get medical attention if irritation persists.

Eyes In case of contact, immediately flush eyes with plenty of water for at least 15 minutes and get medical attention if irritation persists.

Ingestion Under normal conditions, first aid procedures are not required.

Notes to Physician Treat symptomatically.

5. FIRE FIGHTING MEASURES

Flash Point/Range (F):	Not Determined
Flash Point/Range (C):	Not Determined
Flash Point Method:	Not Determined
Autoignition Temperature (F):	Not Determined
Autoignition Temperature (C):	Not Determined
Flammability Limits in Air - Lower (%):	Not Determined
Flammability Limits in Air - Upper (%):	Not Determined

Fire Extinguishing Media All standard firefighting media.

Special Exposure Hazards Not applicable.

Special Protective Equipment for Fire-Fighters Not applicable.

NFPA Ratings: Health 0, Flammability 0, Reactivity 0
HMIS Ratings: Flammability 0, Reactivity 0, Health 0*

6. ACCIDENTAL RELEASE MEASURES

Personal Precautionary Measures Use appropriate protective equipment. Avoid creating and breathing dust.

Environmental Precautionary Measures None known.

Procedure for Cleaning / Absorption Collect using dustless method and hold for appropriate disposal. Consider possible toxic or fire hazards associated with contaminating substances and use appropriate methods for collection, storage and disposal.

7. HANDLING AND STORAGE

Handling Precautions This product contains quartz, cristobalite, and/or tridymite which may become airborne without a visible cloud. Avoid breathing dust. Avoid creating dusty conditions. Use only with adequate ventilation to keep exposure below recommended exposure limits. Wear a NIOSH certified, European Standard En 149, or equivalent respirator when using this product. Material is slippery when wet.

Storage Information Use good housekeeping in storage and work areas to prevent accumulation of dust. Close container when not in use. Do not reuse empty container. Product has a shelf life of 12 months.

8. EXPOSURE CONTROLS/PERSONAL PROTECTION

Engineering Controls Use approved industrial ventilation and local exhaust as required to maintain exposures below applicable exposure limits listed in Section 2.

Respiratory Protection Wear a NIOSH certified, European Standard EN 149, or equivalent respirator when using this product.

Hand Protection Normal work gloves.

Skin Protection Wear clothing appropriate for the work environment. Dusty clothing should be laundered before reuse. Use precautionary measures to avoid creating dust when removing or laundering clothing.

Eye Protection Wear safety glasses or goggles to protect against exposure.

Other Precautions None known.

9. PHYSICAL AND CHEMICAL PROPERTIES

Physical State:	Solid
Color:	Various
Odor:	Odorless
pH:	7.5
Specific Gravity @ 20 C (Water=1):	2.12
Density @ 20 C (lbs./gallon):	Not Determined
Bulk Density @ 20 C (lbs/ft3):	51
Boiling Point/Range (F):	Not Determined
Boiling Point/Range (C):	Not Determined
Freezing Point/Range (F):	Not Determined
Freezing Point/Range (C):	Not Determined
Vapor Pressure @ 20 C (mmHg):	Not Determined
Vapor Density (Air=1):	Not Determined
Percent Volatiles:	Not Determined
Evaporation Rate (Butyl Acetate=1):	Not Determined
Solubility in Water (g/100ml):	Insoluble
Solubility in Solvents (g/100ml):	Not Determined
VOCs (lbs./gallon):	Not Determined
Viscosity, Dynamic @ 20 C (centipoise):	Not Determined
Viscosity, Kinematic @ 20 C (centistrokes):	Not Determined
Partition Coefficient/n-Octanol/Water:	Not Determined
Molecular Weight (g/mole):	Not Determined

10. STABILITY AND REACTIVITY

Stability Data: Stable

Hazardous Polymerization:	Will Not Occur
Conditions to Avoid	None anticipated
Incompatibility (Materials to Avoid)	Hydrofluoric acid.
Hazardous Decomposition Products	Amorphous silica may transform at elevated temperatures to tridymite (870 C) or cristobalite (1470 C).
Additional Guidelines	Not Applicable

11. TOXICOLOGICAL INFORMATION

Principle Route of Exposure Eye or skin contact, inhalation.

Inhalation

Inhaled crystalline silica in the form of quartz or cristobalite from occupational sources is carcinogenic to humans (IARC, Group 1). There is sufficient evidence in experimental animals for the carcinogenicity of tridymite (IARC, Group 2A).

Breathing silica dust may cause irritation of the nose, throat, and respiratory passages. Breathing silica dust may not cause noticeable injury or illness even though permanent lung damage may be occurring. Inhalation of dust may also have serious chronic health effects (See "Chronic Effects/Carcinogenicity" subsection below).

Skin Contact May cause mechanical skin irritation.

Eye Contact May cause eye irritation.

Ingestion None known

Aggravated Medical Conditions Individuals with respiratory disease, including but not limited to asthma and bronchitis, or subject to eye irritation, should not be exposed to quartz dust.

Chronic Effects/Carcinogenicity

Silicosis: Excessive inhalation of respirable crystalline silica dust may cause a progressive, disabling, and sometimes-fatal lung disease called silicosis. Symptoms include cough, shortness of breath, wheezing, non-specific chest illness, and reduced pulmonary function. This disease is exacerbated by smoking. Individuals with silicosis are predisposed to develop tuberculosis.

Cancer Status: The International Agency for Research on Cancer (IARC) has determined that crystalline silica inhaled in the form of quartz or cristobalite from occupational sources can cause lung cancer in humans (Group 1 - carcinogenic to humans) and has determined that there is sufficient evidence in experimental animals for the carcinogenicity of tridymite (Group 2A - possible carcinogen to humans). Refer to IARC Monograph 68, Silica, Some Silicates and Organic Fibres (June 1997) in conjunction with the use of these minerals. The National Toxicology Program classifies respirable crystalline silica as "Known to be a human carcinogen". Refer to the 9th Report on Carcinogens (2000). The American Conference of Governmental Industrial Hygienists (ACGIH) classifies crystalline silica, quartz, as a suspected human carcinogen (A2).

There is some evidence that breathing respirable crystalline silica or the disease silicosis is associated with an increased incidence of significant disease endpoints such as scleroderma (an immune system disorder manifested by scarring of the lungs, skin, and other internal organs) and kidney disease.

Other Information For further information consult "Adverse Effects of Crystalline Silica Exposure" published by the American Thoracic Society Medical Section of the American Lung Association, American Journal of Respiratory and Critical Care Medicine, Volume 155, pages 761-768 (1997).

Toxicity Tests

Oral Toxicity: Not determined

Dermal Toxicity: Not determined

Inhalation Toxicity: Not determined

Primary Irritation Effect: Not determined

Carcinogenicity Refer to IARC Monograph 68, Silica, Some Silicates and Organic Fibres (June 1997).

Genotoxicity: Not determined

Reproductive / Developmental Toxicity: Not determined

12. ECOLOGICAL INFORMATION

Mobility (Water/Soil/Air) Not determined

Persistence/Degradability Not determined

Bio-accumulation Not Determined

Ecotoxicological Information

Acute Fish Toxicity: Not determined
Acute Crustaceans Toxicity: Not determined
Acute Algae Toxicity: Not determined

Chemical Fate Information Not determined

Other Information Not applicable

13. DISPOSAL CONSIDERATIONS

Disposal Method Bury in a licensed landfill according to federal, state, and local regulations.

Contaminated Packaging Follow all applicable national or local regulations.

14. TRANSPORT INFORMATION

Land Transportation

DOT
Not restricted

Canadian TDG
Not restricted

ADR Not restricted

Air Transportation

ICAO/IATA Not restricted

Sea Transportation

IMDG
Not restricted

Other Shipping Information

Labels: None

15. REGULATORY INFORMATION

US Regulations

US TSCA Inventory	All components listed on inventory.
EPA SARA Title III Extremely Hazardous Substances	Not applicable
EPA SARA (311,312) Hazard Class	Acute Health Hazard Chronic Health Hazard
EPA SARA (313) Chemicals	This product does not contain a toxic chemical for routine annual "Toxic Chemical Release Reporting" under Section 313 (40 CFR 372).
EPA CERCLA/Superfund Reportable Spill Quantity For This Product	Not applicable.
EPA RCRA Hazardous Waste Classification	If product becomes a waste, it does NOT meet the criteria of a hazardous waste as defined by the US EPA.
California Proposition 65	The California Proposition 65 regulations apply to this product.
MA Right-to-Know Law	One or more components listed.
NJ Right-to-Know Law	One or more components listed.
PA Right-to-Know Law	One or more components listed.

Canadian Regulations

Canadian DSL Inventory	All components listed on inventory.
WHMIS Hazard Class	D2A Very Toxic Materials Crystalline silica

16. OTHER INFORMATION

The following sections have been revised since the last issue of this MSDS
Not applicable

Additional Information

For additional information on the use of this product, contact your local Halliburton representative.

For questions about the Material Safety Data Sheet for this or other Halliburton products, contact Chemical Compliance at 1-580-251-4335.

Disclaimer Statement

This information is furnished without warranty, expressed or implied, as to accuracy or completeness. The information is obtained from various sources including the manufacturer and other third party sources. The information may not be valid under all conditions nor if this material is used in combination with other materials or in any process. Final determination of suitability of any material is the sole responsibility of the user.

*****END OF MSDS*****

Hydrosil International LTD.
125 Prairie Lake Road - East Dundee, IL 60118
Phone: 847-844-0680
Emergency Phone: 847-844-0680
Fax: 847-844-0799

Back to HS-200 page

HS-200

Media to Remove Oil, Heavy Metals and Similar Organics from Water Safety Data Sheet

Revision date : 2017

SECTION 1: Identification of the substance/mixture and of the company/undertaking

1.1 - Product Identifier

Product Name: HS-200

1.2 - Relevant identified uses of the substance or mixture and uses advised against

Use of the substance/mixture : Filtration

1.3 - Details of the supplier of the safety data sheet

Hydrosil International Ltd.
125 Prairie Lake Rd
East Dundee, IL 60118

T 847-844-0680 - F 847-844-0799
www.hydrosilintl.com

1.4 - Emergency telephone number

Emergency number : 1-847-844-0680

Section 2: Hazards Identification

2.1 - Classification of the substance or mixture

GHS-US classification
Eye Dam. 1 H318
STOT SE 3 H335

2.2 - Label Elements

GHS-US labeling

Hazard pictograms (GHS-US) :



Signal word (GHS-US) : Danger
Hazard statements (GHS-US) :

H318 - Causes serious eye damage
H335 - May cause respiratory irritation

Precautionary statements (GHS-US) :

P261 - Avoid breathing dust/fume/gas/mist/vapors/spray
P271 - Use only outdoors or in a well-ventilated area
P280 - Wear protective gloves/protective clothing/eye protection/face protection
P304+P340 - IF INHALED: Remove person to fresh air and keep comfortable for breathing
P305+P351+P338 - If in eyes: Rinse cautiously with water for several minutes. Remove contact lenses, if present and easy to do. Continue rinsing
P310 - Immediately call a POISON CENTER/doctor/…
P312 - Call a POISON CENTER/doctor/…/if you feel unwell
P403+P233 - Store in a well-ventilated place. Keep container tightly closed
P405 - Store locked up
P501 - Dispose of contents/container to ...

2.3 - Other Hazards

No additional information available

2.4 - Unknown acute toxicity (GHS US)

No data available

SECTION 3: Composition/information on ingredients

3.1 - Substances

Not applicable

3.2 - Mixture

Name	Product Identifier	%	GHS-US Classification
Zeolite	(CAS No.) 1318-02-1	85.2 - 86.2	STOT SE 3, H335
Water	(CAS No.) 7732-18-5	8.4 - 11.4	Not classified
N,N,N-Trimethyl-1-hexadecanaminium chloride	(CAS No.) 112-02-7	3.4 - 5.4	Skin Irrit. 2, H315 Eye Dam. 1, H318 Aquatic Acute 1, H400

SECTION 4: First aid measures

4.1 - Description of first aid measures

First-aid measures after inhalation : Remove person to fresh air. If not breathing, administer CPR or artificial respiration. Get immediate medical attention.
First-aid measures after skin contact : If skin reddening or irritation develops, seek medical attention.
First-aid measures after eye contact : Immediately flush eyes with plenty of water for at least 15 minutes. If irritation persists get medical attention.
First-aid measures after ingestion : If the material is swallowed, get immediate medical attention or advice. DO NOT induce vomiting unless directed to do so by medical personnel.

4.2 - Most important symptoms and effects, both acute and delayed

Symptoms/injuries after inhalation : May cause respiratory irritation.
Symptoms/injuries after skin contact : Causes skin irritation.
Symptoms/injuries after eye contact : Causes serious eye irritation.
Symptoms/injuries after ingestion : May be harmful if swallowed.

4.3 - Indication of any immediate medical attention and special treatment needed

No additional information available

SECTION 5: Firefighting measures

5.1 - Extinguishing media

Suitable extinguishing media : If involved with fire, flood with plenty of water.
Unsuitable extinguishing media : None.

5.2 - Special hazards arising from the substance or mixture

Fire hazard : None known.
Explosion hazard : None known.

5.3 - Advice for firefighters

Protection during firefighting : Firefighters should wear full protective gear.

SECTION 6: Accidental release measures

6.1 - Personal precautions, protective equipment and emergency procedures

General measures : Avoid contact with the skin and the eyes.
For non-emergency personnel : No additional information available
For emergency responders : No additional information available

6.2 - Environmental precautions

None.

6.3 - Methods and material for containment and cleaning up

For containment : If possible, stop flow of product.
Methods for cleaning up : Shovel or sweep up and put in a closed container for disposal.

6.4 - Reference to other sections

No additional information available

SECTION 7: Handling and storage

7.1 - Precautions for safe handling

Precautions for safe handling : Wet carbon/coal removes oxygen from air causing a severe hazard to workers inside carbon vessels or confined spaces.

7.2 - Conditions for safe storage, including any incompatibilities

Storage conditions : Protect containers from physical damage. Store in dry, cool, well-ventilated area.

7.3 - Specific end use(s)

No additional information available

SECTION 8: Exposure controls/personal protection

8.1 - Control parameters

No additional information available

8.2 - Exposure controls

Appropriate engineering controls : Local exhaust and general ventilation must be adequate to meet exposure standards.
Hand protection : Use impervious gloves.
Eye protection : Safety glasses.
Skin and body protection : Wear suitable working clothes.
Respiratory protection : If airborne concentrations are above the applicable exposure limits, use NIOSH approved respiratory protection.

SECTION 9: Physical and chemical properties

9.1 - Information on basic physical and chemical properties

Physical state : Solid
Appearance : Irregular shaped.
Color : White
Odor : No data available
Odor threshold : No data available
pH : No data available
Relative evaporation rate (butyl acetate=1) : No data available
Melting point : No data available
Freezing point : No data available
Boiling point : No data available
Flash point : No data available
Self ignition temperature : No data available
Decomposition temperature : No data available
Flammability (solid, gas) : No data available
Vapor pressure : No data available
Relative vapor density at 20 °C : No data available
Relative density : 57-59 lb/ft3
Solubility : No data available
Log Pow : No data available
Log Kow : No data available
Viscosity, kinematics : No data available
Viscosity, dynamic : No data available
Explosive properties : No data available
Oxidizing properties : No data available
Explosive limits : No data available

9.1 - Other information

No additional information available

SECTION 10: Stability and Reactivity

10.1 - Reactivity

No additional information available

10.2 - Chemical stability

Stable under normal conditions.

10.3 - Possibility of hazardous reactions

Will not occur

10.4 - Conditions to avoid

None

10.5 - Incompatible materials

Strong oxidizing and reducing agents.

10.6 - Hazardous decomposition products

Organic chlorides, amines, hydrogen chloride may be produced.

SECTION 11: Toxicological information

11.1 - Information on toxicological effects

Acute toxicity : Not classified

Zeolite (1318-02-1)	
LD50 oral rat	5000 mg/kg
LD50 dermal rabbit	> 2000 mg/kg
LC50 inhalation rat (mg/l)	2.4 mg/l (Exposure time: 1 h)
ATE (oral)	5000 mg/kg

Skin corrosion/irritation : Not classified
Serious eye damage/irritation : Causes serious eye damage.
Respiratory or skin sensitization : Not classified
Germ cell mutagenicity : Not classified
Carcinogenicity : Not classified

Zeolite (1318-02-1)	
IARC group	3

Reproductive toxicity : Not classified
Specific target organ toxicity (single exposure) : May cause respiratory irritation.
Specific target organ toxicity (repeated exposure) : Not classified
Aspiration hazard : Not classified

SECTION 12: Ecological information

12.1 - Toxicity

Zeolite (1318-02-1)	
LC50 fishes 1	1800 mg/l (Exposure time: 96 h - Species: Brachydanio rerio [semi-static])
EC50 Daphnia 1	1000 - 1800 mg/l (Exposure time: 48 h - Species: Daphnia magna)
EC50 other aquatic organisms 1	18 mg/l (Exposure time: 96 h - Species: Desmodesmus subspicatus)
LC50 fish 2	3200 - 5600 mg/l (Exposure time: 96 h - Species: Oryzias latipes [semi-static])

12.2 - Persistence and degradability

No additional information available

12.3 - Bioaccumulative potential

No additional information available

12.4 - Mobility in soil

No additional information available

12.5 - Other adverse effects

No additional information available

SECTION 13: Disposal considerations

13.1 - Waste treatment methods

Waste disposal recommendations : Dispose of contents/container in accordance with local/regional /national/international regulations.

SECTION 14: Transport information

In accordance with DOT / ADR / RID / ADNR / IMDG / ICAO / IATA

14.1 - UN number

Not applicable

14.2 - UN proper shipping name

Not applicable

SECTION 15: Regulatory information

15.1 - US Federal regulations

15.2 - US State regulations

No additional information available

SECTION 16: Other information

Full text of H-phrases:

Aquatic Acute 1	Hazardous to the aquatic environment - Acute Hazard Category 1
Eye Dam. 1	Serious eye damage/eye irritation Category 1
Skin Irrit. 2	skin corrosion/irritation Category 2
STOT SE 3	Specific target organ toxicity (single exposure) Category 3
H315	Causes skin irritation
H318	Causes serious eye damage
H335	May cause respiratory irritation
H400	Very toxic to aquatic life

NFPA health hazard : 2 - Intense or continued exposure could cause temporary incapacitation or possible residual injury unless prompt
medical attention is given.
NFPA fire hazard : 0 - Materials that will not burn.
NFPA reactivity : 0 - Normally stable, even under fire exposure conditions, and are not reactive with water

Copyright© 2017 Hydrosil International, LTD. License granted to make unlimited paper copies for internal use only. The above information is believed to be correct but does not purport to be all inclusive and shall be used only as a guide. This information is based on our current knowledge and is intended to describe the product for the purposes of health, safety and environmental requirements only. It should not therefore be construed as guaranteeing any specific property of the product. Hydrosil International LTD. makes no warranty, either expressed or implied, including any warranties of merchantability and fitness for a particular purpose.

Back to HS-200 page

Hydrosil International LTD.
125 Pra r e Lake Road - East Dundee, IL 60118
Phone: 847-844-0680
Emergency Phone: 847-844-0680
Fax: 847-844-0799

Back to HS 270 page

HS-270

30/70 Blend by Volume of HS-200 and 6 x 30 Mesh Anthracite Coal Safety Data Sheet

Rev s on date : 2017

SECTION 1: Identification of the substance/mixture and of the company/undertaking

1.1 - Product Ident f er

Product Name: HS-270

1.2 - Re evant dent f ed uses of the substance or m xture and uses adv sed aga nst

Use of the substance/m xture : F trat on

1.3 - Deta s of the supp er of the safety data sheet

Hydros Internat ona Ltd.
125 Pra r e Lake Rd
East Dundee, IL 60118
(P) 847-844-0680
(F) 847-844-0799
www.hydros nt .com

1.4 - Emergency te ephone number

Emergency number : 1-847-844-0680

Section 2: Hazards Identification

2.1 - C ass f cat on of the substance or m xture

GHS-US c ass f cat on
Eye Dam. 1 H318
STOT SE 3 H335

2.2 - Labe E ements

GHS-US abe ng
Hazard p ctograms (GHS-US) :



S gna word (GHS-US) : Danger
Hazard statements (GHS-US) :

H318 - Causes ser ous eye damage
H335 - May cause resp ratory rr tat on

Precaut onary statements (GHS-US) :

P261 - Avo d breath ng dust/fume/gas/m st/vapours/spray
P271 - Use on y outdoors or n a we -vent ated area
P280 - Wear protect ve g oves/protect ve c oth ng/eye protect on/face protect on
P304+P340 - IF INHALED: Remove person to fresh a r and keep comfortab e for breath ng
P305+P351+P338 - If n eyes: R nse caut ous y w th water for severa m nutes. Remove contact enses, f present and easy to do. Cont nue r ns ng
P310 - Immed ate y ca a POISON CENTER/doctor/…
P312 - Ca a POISON CENTER/doctor/…/ f you fee unwe
P403+P233 - Store n a we -vent ated p ace. Keep conta ner t ght y c osed
P405 - Store ocked up
P501 - D spose of contents/conta ner to ...

2.3 - Other Hazards

No add t ona nformat on ava ab e

2.4 - Unknown acute tox c ty (GHS US)

No data ava ab e

SECTION 3: Composition/information on ingredients

3.1 - Substances

Not app cab e

3.2 - M xture

Name	Product Identifier	%	GHS-US Classification
Zeo te	(CAS No.) 1318-02-1	62 - 64	STOT SE 3, H335
Coa , anthrac te	(CAS No.) 8029-10-5	25.98 - 27.98	
Water	(CAS No.) 7732-18-5	3.56 - 9.46	Not c ass f ed
N,N,N-Tr methy -1-hexadecanam n um ch or de	(CAS No.) 112-02-7	2.46 - 4.46	Sk n Irr t. 2, H315 Eye Dam. 1, H318 Aquat c Acute 1, H400

SECTION 4: First aid measures

4.1 - Descr pt on of f rst a d measures

F rst-a d measures after nha at on : Remove person to fresh a r. If not breath ng, adm n ster CPR or art f c a resp rat on. Get mmed ate med ca attent on.
F rst-a d measures after sk n contact : If sk n redden ng or rr tat on deve ops, seek med ca attent on.
F rst-a d measures after eye contact : Immed ate y f ush eyes w th p enty of water for at east 15 m nutes. If rr tat on pers sts get med ca attent on.
F rst-a d measures after ngest on : If the mater a s swa owed, get mmed ate med ca attent on or adv ce. DO NOT nduce vom t ng un ess d rected to do so by med ca personne .

4.2 - Most mportant symptoms and effects, both acute and de ayed

Symptoms/ njur es after nha at on : May cause resp ratory rr tat on.
Symptoms/ njur es after sk n contact : May cause sk n rr tat on.
Symptoms/ njur es after eye contact : Causes ser ous eye rr tat on.
Symptoms/ njur es after ngest on : May be harmfu f swa owed.

4.3 - Ind cat on of any mmed ate med ca attent on and spec a treatment needed

No add t ona nformat on ava ab e

SECTION 5: Firefighting measures

5.1 - Ext ngu sh ng med a

Su tab e ext ngu sh ng med a : If nvo ved w th f re, f ood w th p enty of water.
Unsu tab e ext ngu sh ng med a : None.

5.2 - Spec a hazards ar s ng from the substance or m xture

F re hazard : None known.
Exp os on hazard : None known.

5.3 - Adv ce for f ref ghters

Protect on dur ng f ref ght ng : F ref ghters shou d wear fu protect ve gear.

SECTION 6: Accidental release measures

6.1 - Persona precaut ons, protect ve equ pment and emergency procedures

Genera measures : Avo d contact w th the sk n and the eyes.
For non-emergency personne : No add t ona nformat on ava ab e
For emergency responders : No add t ona nformat on ava ab e

6.2 - Env ronmenta precaut ons

None.

6.3 - Methods and mater a for conta nment and c ean ng up

For conta nment : If poss b e, stop f ow of product.
Methods for c ean ng up : Shove or sweep up and put n a c osed conta ner for d sposa .

6.4 - Reference to other sect ons

No add t ona nformat on ava ab e

SECTION 7: Handling and storage

7.1 - Precaut ons for safe hand ng

Precaut ons for safe hand ng : Avo d contact w th eyes.

7.2 - Cond t ons for safe storage, nc ud ng any ncompat b t es

Storage cond t ons : Protect conta ners from phys ca damage. Store n dry, coo , we -vent ated area.

7.3 - Spec f c end use(s)

No add t ona nformat on ava ab e

SECTION 8: Exposure controls/personal protection

8.1 - Contro parameters

Coal, anthracite (8029-10-5)		
USA ACGIH	ACGIH TWA (mg/m³)	0.4 mg/m³

8.2 - Exposure contro s

Appropr ate eng neer ng contro s : Loca exhaust and genera vent at on must be adequate to meet exposure standards.
Hand protect on : Use mperv ous g oves.
Eye protect on : Safety g asses.
Sk n and body protect on : Wear su tab e work ng c othes.
Resp ratory protect on : If a rborne concentrat ons are above the app cab e exposure m ts, use NIOSH approved resp ratory protect on.

SECTION 9: Physical and chemical properties

9.1 - Informat on on bas c phys ca and chem ca propert es

Phys ca state : So d
Appearance : Irregu ar shaped
Co our : Wh te/b ack
Odour : No data ava ab e
Odour thresho d : No data ava ab e
pH : No data ava ab e
Re at ve evaporat on rate (buty acetate 1) : No data ava ab e
Me t ng po nt : No data ava ab e
Freez ng po nt : No data ava ab e
Bo ng po nt : No data ava ab e
F ash po nt : No data ava ab e
Se f gn t on temperature : No data ava ab e
Decompos t on temperature : No data ava ab e
F ammab ty (so d, gas) : No data ava ab e
Vapour pressure : No data ava ab e
Re at ve vapour dens ty at 20 °C : No data ava ab e
Re at ve dens ty : 54-56 b/ft3
So ub ty : No data ava ab e
Log Pow : No data ava ab e
Log Kow : No data ava ab e
V scos ty, k nemat c : No data ava ab e
V scos ty, dynam c : No data ava ab e
Exp os ve propert es : No data ava ab e
Ox d s ng propert es : No data ava ab e
Exp os ve m ts : No data ava ab e

9.1 - Other nformat on

No add t ona nformat on ava ab e

SECTION 10: Stability and reactivity

10.1 - React v ty

No add t ona nformat on ava ab e

10.2 - Chem ca stab ty

Stab e under norma cond t ons.

10.3 - Poss b ty of hazardous react ons

W not occur

10.4 - Cond t ons to avo d

None

10.5 - Incompat b e mater a s

Strong ox d z ng and reduc ng agents such as ozone, qu d oxygen, or ch or ne.

10.6 - Hazardous decompos t on products

Carbon monox de may be generated n the event of a f re. Organ c ch or des, am nes, hydrogen ch or de may be produced.

SECTION 11: Toxicological information

11.1 - Informat on on tox co og ca effects

Acute tox c ty : Not c ass f ed

Zeolite (1318-02-1)	
LD50 ora rat	5000 mg/kg
LD50 derma rabb t	> 2000 mg/kg
LC50 nha at on rat (mg/)	2.4 mg/ (Exposure t me: 1 h)
ATE (ora)	5000 mg/kg

N,N,N-Trimethyl-1-hexadecanaminium chloride (112-02-7)	
LD50 derma rabb t	4300 uL/kg/24H;

Sk n corros on/ rr tat on : Not c ass f ed
Ser ous eye damage/ rr tat on : Causes ser ous eye damage.
Resp ratory or sk n sens t sat on : Not c ass f ed
Germ ce mutagen c ty : Not c ass f ed
Carc nogen c ty : Not c ass f ed

Zeolite (1318-02-1)	
IARC group	3

Reproduct ve tox c ty : Not c ass f ed
Spec f c target organ tox c ty (s ng e exposure) : May cause resp ratory rr tat on.
Spec f c target organ tox c ty (repeated exposure) : Not c ass f ed
Asp rat on hazard : Not c ass f ed

SECTION 12: Ecological information

12.1 - Tox c ty

Zeolite (1318-02-1)	
LC50 f shes 1	1800 mg/ (Exposure t me: 96 h - Spec es: Brachydan o rer o [sem -stat c])
EC50 Daphn a 1	1000 - 1800 mg/ (Exposure t me: 48 h - Spec es: Daphn a magna)
EC50 other aquat c organ sms 1	18 mg/ (Exposure t me: 96 h - Spec es: Desmodesmus subsp catus)
LC50 f sh 2	3200 - 5600 mg/ (Exposure t me: 96 h - Spec es: Oryz as at pes [sem -stat c])

12.2 - Pers stence and degradab ty

No add t ona nformat on ava ab e

12.3 - B oaccumu at ve potent a

No add t ona nformat on ava ab e

12.4 - Mob ty n so

No add t ona nformat on ava ab e

12.5 - Other adverse effects

No add t ona nformat on ava ab e

SECTION 13: Disposal considerations

13.1 - Waste treatment methods

Waste d sposa recommendat ons : D spose of contents/conta ner n accordance w th oca /reg ona /nat ona / nternat ona regu at ons.

SECTION 14: Transport information

In accordance w th DOT / ADR / RID / ADNR / IMDG / ICAO / IATA

14.1 - UN number

Not app cab e

14.2 - UN proper sh pp ng name

Not app cab e

SECTION 15: Regulatory information

15.1 - US Federa regu at ons

N,N,N-Trimethyl-1-hexadecanaminium chloride (112-02-7)
L sted on the Un ted States TSCA (Tox c Substances Contro Act) nventory

15.2 - US State regu at ons

No add t ona nformat on ava ab e

SECTION 16: Other information

Fu text of H-phrases:

Aquat c Acute 1	Hazardous to the aquat c env ronment - Acute Hazard Category 1
Eye Dam. 1	Ser ous eye damage/eye rr tat on Category 1
Sk n Irr t. 2	sk n corros on/ rr tat on Category 2
STOT SE 3	Spec f c target organ tox c ty (s ng e exposure) Category 3
H315	Causes sk n rr tat on
H318	Causes ser ous eye damage
H335	May cause resp ratory rr tat on
H400	Very tox c to aquat c fe

NFPA hea th hazard : 2 - Intense or cont nued exposure cou d cause temporary ncapac tat on or poss b e res dua njury un ess prompt
med ca attent on s g ven.
NFPA f re hazard : 0 - Mater a s that w not burn.
NFPA react v ty : 0 - Norma y stab e, even under f re exposure cond t ons, and are not react ve w th water

Copyright 2017 Hydrosil International LTD License granted to make unlimited paper copies for internal use only The above information is believed to be correct but does not purport to be all inclusive and shall be used only as a guide This information is based on our current knowledge and is intended to describe the product for the purposes of health safety and environmental requirements only It should not therefore be construed as guaranteeing any specific property of the product Hydrosil International LTD makes no warranty either expressed or implied including any warranties of merchantability and fitness for a particular purpose

Back to HS 270 page

Hydrosil International LTD.
125 Prairie Lake Road - East Dundee, IL 60118
Phone: 847-844-0680
Emergency Phone: 847-844-0680
Fax: 847-844-0799

Back to HS-600 page

HS-600

6% Potassium Permanganate Impregnated Media Safety Data Sheet

Revision date : 2017

SECTION 1: Identification of the substance/mixture and of the company/undertaking

1.1 - Product Identifier

Product Name: HS-600

1.2 - Relevant identified uses of the substance or mixture and uses advised against

Use of the substance/mixture : Filtration

1.3 - Details of the supplier of the safety data sheet

Hydrosil International Ltd.
125 Prairie Lake Rd
East Dundee, IL 60118
(P) 847-844-0680
(F) 847-844-0799
www.hydrosilintl.com

1.4 - Emergency telephone number

Emergency number : 1-847-844-0680

Section 2: Hazards Identification

2.1 - Classification of the substance or mixture

GHS-US classification
Ox. Sol. 2 H272
STOT SE 3 H335

2.2 - Label Elements

GHS-US labelling

Hazard pictograms (GHS-US) :



Signal word (GHS-US) : Danger
Hazard statements (GHS-US) :

H272 - May intensify fire; oxidizer
H335 - May cause respiratory irritation

Precautionary statements (GHS-US) :

P210 - Keep away from heat/sparks/open flames/hot surfaces. - No smoking
P220 - Keep/Store away from clothing/…/combustible materials
P221 - Take any precaution to avoid mixing with combustibles/...
P261 - Avoid breathing dust/fume/gas/mist/vapours/spray
P271 - Use only outdoors or in a well-ventilated area
P280 - Wear protective gloves/protective clothing/eye protection/face protection
P304+P340 - IF INHALED: Remove person to fresh air and keep comfortable for breathing
P312 - Call a POISON CENTER/doctor/…/if you feel unwell
P370+P378 - In case of fire: Use ... for extinction
P403+P233 - Store in a well-ventilated place. Keep container tightly closed
P405 - Store locked up
P501 - Dispose of contents/container to ...

2.3 - Other Hazards

No additional information available

2.4 - Unknown acute toxicity (GHS US)

No data available

SECTION 3: Composition/information on ingredients

3.1 - Substances

Not applicable

3.2 - Mixture

Name	Product Identifier	%	GHS-US Classification
Zeolite	(CAS No.) 1318-02-1	79.5 - 81.5	STOT SE 3, H335
Water	(CAS No.) 7732-18-5	12.5 - 14.5	Not classified
Potassium permanganate	(CAS No.) 7722-64-7	6 - 8	Ox. Sol. 2, H272 Acute Tox. 4 (Oral), H302

SECTION 4: First aid measures

4.1 - Description of first aid measures

First-aid measures after inhalation : Remove person to fresh air. If not breathing, administer CPR or artificial respiration. Get immediate medical attention.
First-aid measures after skin contact : If skin reddening or irritation develops, seek medical attention.
First-aid measures after eye contact : Immediately flush eyes with plenty of water for at least 15 minutes. If irritation persists get medical attention.
First-aid measures after ingestion : If the material is swallowed, get immediate medical attention or advice. DO NOT induce vomiting unless directed to do so by medical personnel.

4.2 - Most important symptoms and effects, both acute and delayed

Symptoms/injuries after inhalation : May cause respiratory irritation.
Symptoms/injuries after skin contact : Causes skin irritation. May stain body tissue.
Symptoms/injuries after eye contact : Causes serious eye irritation.
Symptoms/injuries after ingestion : May be harmful if swallowed.

4.3 - Indication of any immediate medical attention and special treatment needed

No additional information available

SECTION 5: Firefighting measures

5.1 - Extinguishing media

Suitable extinguishing media : Use extinguishing media appropriate for surrounding fire.
Unsuitable extinguishing media : None.

5.2 - Special hazards arising from the substance or mixture

Fire hazard : May intensify fire; oxidizer.
Explosion hazard : None known.

5.3 - Advice for firefighters

Protection during firefighting : Firefighters should wear full protective gear.

SECTION 6: Accidental release measures

6.1 - Personal precautions, protective equipment and emergency procedures

General measures : Avoid contact with the skin and the eyes.
For non-emergency personnel : No additional information available
For emergency responders : No additional information available

6.2 - Environmental precautions

None.

6.3 - Methods and material for containment and cleaning up

For containment : If possible, stop flow of product.
Methods for cleaning up : Shovel or sweep up and put in a closed container for disposal.

6.4 - Reference to other sections

No additional information available

SECTION 7: Handling and storage

7.1 - Precautions for safe handling

Precautions for safe handling : Avoid contact with eyes.

7.2 - Conditions for safe storage, including any incompatibilities

Storage conditions : Protect containers from physical damage. Store in dry, cool, well-ventilated area.

7.3 - No additional information available

SECTION 8: Exposure controls/personal protection

8.1 - Control parameters

No additional information available

8.2 - Exposure controls

Appropriate engineering controls : Local exhaust and general ventilation must be adequate to meet exposure standards.
Hand protection : Use impervious gloves to minimize skin contact

2014 EN (English) 3/5
Eye protection : Safety glasses.
Skin and body protection : Wear suitable working clothes.
Respiratory protection : If airborne concentrations are above the applicable exposure limits, use NIOSH approved respiratory protection.

SECTION 9: Physical and chemical properties

9.1 - Information on basic physical and chemical properties

Physical state : Solid
Appearance : Granules
Colour : Purple
Odour : No data available
Odour threshold : No data available
pH : No data available
Relative evaporation rate (butylacetate=1) : No data available
Melting point : No data available
Freezing point : No data available
Boiling point : No data available
Flash point : No data available
Self ignition temperature : No data available
Decomposition temperature : No data available
Flammability (solid, gas) : No data available
Vapour pressure : No data available
Relative vapour density at 20 °C : No data available
Relative density : 59-61 lb/ft3
Solubility : No data available
Log Pow : No data available
Log Kow : No data available
Viscosity, kinematic : No data available
Viscosity, dynamic : No data available
Explosive properties : No data available
Oxidising properties : No data available
Explosive limits : No data available

9.1 - Other information

No additional information available

SECTION 10: Stability and reactivity

10.1 - Reactivity

None known.

10.2 - Chemical stability

Stable under normal conditions.

10.3 - Possibility of hazardous reactions

Will not occur

10.4 - Conditions to avoid

None

10.5 - Incompatible materials

None

10.6 - Hazardous decomposition products

None

SECTION 11: Toxicological information

11.1 - Information on toxicological effects

Acute toxicity : Not classified

Zeolite (1318-02-1)	
LD50 oral rat	5000 mg/kg
LD50 dermal rabbit	> 2000 mg/kg
LC50 inhalation rat (mg/l)	2.4 mg/l (Exposure time: 1 h)
ATE (oral)	5000 mg/kg

Potassium permanganate (7722-64-7)	
LD50 oral rat	750 mg/kg

Skin corrosion/irritation : Causes skin irritation.
Serious eye damage/irritation : Causes serious eye irritation.
Respiratory or skin sensitisation : Not classified
Germ cell mutagenicity : Not classified
Carcinogenicity : Not classified

Zeolite (1318-02-1)	
IARC group	3

Reproductive toxicity : Not classified
Specific target organ toxicity (single exposure) : Not classified
Specific target organ toxicity (repeated exposure) : Not classified
Aspiration hazard : Not classified

SECTION 12: Ecological information

12.1 - Toxicity

Zeolite (1318-02-1)	
LC50 fishes 1	1800 mg/l (Exposure time: 96 h - Species: Brachydanio rerio [semi-static])
EC50 Daphnia 1	1000 - 1800 mg/l (Exposure time: 48 h - Species: Daphnia magna)
EC50 other aquatic organisms 1	18 mg/l (Exposure time: 96 h - Species: Desmodesmus subspicatus)
LC50 fish 2	3200 - 5600 mg/l (Exposure time: 96 h - Species: Oryzias latipes [semi-static])

Potassium permanganate (7722-64-7)	
LC50 fishes 1	3.3 - 3.93 mg/l (Exposure time: 96 h - Species: Carassius auratus [static])
LC50 fish 2	2.97 - 3.11 mg/l (Exposure time: 96 h - Species: Cyprinus carpio)

12.2 - Persistence and degradability

No additional information available

12.3 - Bioaccumulative potential

Potassium hydroxide (1310-58-3)	
Log Pow	0.65

12.4 - Mobility in soil

No additional information available

12.5 - Other adverse effects

No additional information available

SECTION 13: Disposal considerations

13.1 - Waste treatment methods

Waste disposal recommendations : Dispose of contents/container in accordance with local/regional /national/international regulations.

SECTION 14: Transport information

In accordance with DOT / ADR / RID / ADNR / IMDG / ICAO / IATA

14.1 - UN number

Not applicable

14.2 - UN proper shipping name

Not applicable

SECTION 15: Regulatory information

15.1 - US Federal regulations

Potassium permanganate (7722-64-7)
Listed on the United States TSCA (Toxic Substances Control Act) inventory

15.2 - US State regulations

Potassium permanganate (7722-64-7)
U.S. - Massachusetts - Right To Know List U.S. - New Jersey - Right to Know Hazardous Substance List U.S. - Pennsylvania - RTK (Right to Know) List

SECTION 16: Other information

Full text of H-phrases:

Acute Tox. 3 (Oral)	0.65
Eye Irrit. 2A	Serious eye damage/eye irritation Category 2A
Skin Corr. 1A	skin corrosion/irritation Category 1A
Skin Irrit. 2	skin corrosion/irritation Category 2
H301	Toxic if swallowed
H314	Causes severe skin burns and eye damage
H315	Causes skin irritation
H319	Causes serious eye irritation

NFPA health hazard : 1 - Exposure could cause irritation but only minor residual injury even if no treatment is given.
NFPA fire hazard : 1 - Must be preheated before ignition can occur.
NFPA reactivity : 0 - Normally stable, even under fire exposure conditions, and are not reactive with water.

Copyright 2017 Hydrosil International, LTD. License granted to make unlimited paper copies for internal use only. The above information is believed to be correct but does not purport to be all inclusive and shall be used only as a guide. This information is based on our current knowledge and is intended to describe the product for the purposes of health, safety and environmental requirements only. It should not therefore be construed as guaranteeing any specific property of the product. Hydrosil International LTD. makes no warranty, either expressed or implied, including any warranties of merchantability and fitness for a particular purpose.

Back to HS-600 page

SAFETY DATA SHEET

Issue Date 01-Jun-2018 **Revision Date** 01-Jun-2018 **Version** 1

1. IDENTIFICATION OF THE SUBSTANCE/PREPARATION AND OF THE COMPANY/UNDERTAKING

Product identifier
Product Name ALL SEASON SELECT

Other means of identification
Product code:
Synonyms None

Recommended use of the chemical and restrictions on use
Recommended Use Lubricant.
Uses advised against No information available

Details of the supplier of the safety data sheet
Supplier Address
Ingersoll Rand Industrial Technologies
800-D Beaty Street
Davidson, NC 28036
Office 704-655-4880
Fax 704-655-4882

Emergency telephone number
Emergency Telephone INTERNATIONAL: (703) 527-3887 24 hrs.

2. HAZARD IDENTIFICATION

Classification

OSHA Regulatory Status
This chemical is not considered hazardous by the 2012 OSHA Hazard Communication Standard (29 CFR 1910.1200)

WHMIS 2015 Regulatory Status
This chemical is not considered hazardous by the Canadian Hazardous Products Regulations (WHMIS 2015).

Not a dangerous substance or mixture according to the Globally Harmonized System (GHS)

Label Elements

EMERGENCY OVERVIEW

Signal word
Not Classified

Hazard statements
None

The product contains no substances which at their given concentration, are considered to be hazardous to health

Appearance Oil **Physical state** Liquid **Odor** Mild

Precautionary Statements - Prevention
Not applicable
Eyes None
Skin None
Inhalation None
Ingestion None

Precautionary Statements - Storage
Not applicable

Hazards not otherwise classified (HNOC)
Other information
• Harmful to aquatic life with long lasting effects

3. COMPOSITION/INFORMATION ON INGREDIENTS

The product contains no substances which at their given concentration, are considered to be hazardous to health.

4. FIRST AID MEASURES

First aid measures

Eye contact: Flush eye with water for 15 minutes. If symptoms persist, call a physician.

Skin contact: Remove and wash contaminated clothing before re-use. Wash off immediately with soap and plenty of water.

Inhalation: If breathing is difficult, give oxygen. Consult a physician. Move to fresh air.

Ingestion: Drink 1 or 2 glasses of water. Do not induce vomiting. Consult a physician if necessary.

Most important symptoms and effects, both acute and delayed

Symptoms: No information available.

Indication of any immediate medical attention and special treatment needed

5. FIRE-FIGHTING MEASURES

Suitable extinguishing media:
Carbon dioxide (CO2). Dry chemical. Water spray mist or foam.

Unsuitable extinguishing media Do not use a solid water stream as it may scatter and spread fire
Specific hazards arising from the chemical
Thermal decomposition can lead to release of irritating gases and vapors. In the event of fire, cool tanks with water spray.

Explosion data
Sensitivity to Mechanical Impact None.
Sensitivity to Static Discharge None.

Special protective equipment for firefighters:
In the event of fire, wear self-contained breathing apparatus. Standard procedure for chemical fires.

6. ACCIDENTAL RELEASE MEASURES

Personal precautions, protective equipment and emergency procedures

Personal precautions: Contaminated surfaces will be extremely slippery. Wear personal protective equipment.

Environmental precautions

Environmental precautions: Should not be released into the environment.

Methods and material for containment and cleaning up

Methods for containment Prevent further leakage or spillage if safe to do so.

Methods for cleaning up: Absorb spill with inert material (e.g. dry sand or earth), then place in a chemical waste container.

7. HANDLING AND STORAGE

Precautions for safe handling

Handling Always replace cap after use. Handle in accordance with good industrial hygiene and safety practice.

Conditions for safe storage, including any incompatibilities

Storage Conditions Keep containers dry and tightly closed to avoid moisture absorption and contamination

8. EXPOSURE CONTROLS/PERSONAL PROTECTION

Control parameters

Exposure Guidelines Contains mineral oil, vegetable oil, and/or synthetic oil. Under conditions which may generate mists, observe the OSHA PEL of 5 mg/m^3, ACGIH STEL of 10 mg/m^3.

Appropriate engineering controls

Engineering measures to reduce exposure: Ensure adequate ventilation, especially in confined areas.

Individual protection measures, such as personal protective equipment

Respiratory protection: In case of mist, spray or aerosol exposure wear suitable personal respiratory protection and protective suit. Breathing apparatus needed only when aerosol or mist is formed.
Hand protection: Impervious gloves
Eye protection: Safety glasses
Skin and body protection: Usual safety precautions while handling the product will provide adequate protection against this potential effect
General Hygiene Considerations Avoid contact with skin, eyes and clothing. Wash off with soap and water

9. PHYSICAL AND CHEMICAL PROPERTIES

Information on basic physical and chemical properties

Physical state Liquid
Appearance Oil **Odor** Mild **Color** Clear **Odor threshold** No information available

Property	Values	Remarks • Method		
pH			Not applicable	

Melting point/freezing point	No information available	**Boiling point / boiling range**	> 315 °C / 600 °F
Flash point	> 232 °C / 450 °F Cleveland Open Cup	**Evaporation rate**	No information available
Flammability (solid, gas)	No information available	**Flammability Limit in Air**	
Upper flammability limit:	No information available	**Lower flammability limit:**	No information available
Vapor pressure	No information available	**Vapor density**	No information available
Specific Gravity	< 1.0	**Water solubility**	Insoluble in water
Solubility in other solvents	No information available	**Partition coefficient**	No information available
Autoignition temperature	No information available	**Decomposition temperature**	No information available
Kinematic viscosity	approx. 97.0 cSt @ 40 º C	**Dynamic viscosity**	No information available

Explosive properties No information available
Oxidizing properties No information available

Other information

Softening point No information available
Molecular weight No information available
VOC Content (%) No information available
Density No information available
Bulk density No information available

10. STABILITY AND REACTIVITY

Reactivity
Not applicable

Chemical stability

Stability Stable under normal conditions

Possibility of Hazardous Reactions

Possibility of Hazardous Reactions None under normal processing.
Hazardous polymerization Hazardous polymerization does not occur.

Conditions to avoid

Conditions to avoid No special storage conditions required

Hazardous Decomposition Products

Hazardous Decomposition Products Incomplete combustion may produce small amounts of carbon oxides

Incompatible materials

Incompatible materials Oxidising agents

11. TOXICOLOGICAL INFORMATION

Information on likely routes of exposure

Product Information	Product does not present an acute toxicity hazard based on known or supplied information
Eye contact	May cause slight irritation.
Skin contact	Substance does not generally irritate and is only mildly irritating to the skin.
Inhalation	Inhalation of vapors in high concentration may cause irritation of respiratory system.
Ingestion	Ingestion may cause gastrointestinal irritation, nausea, vomiting and diarrhoea.

Information on toxicological effects

Delayed and immediate effects as well as chronic effects from short and long-term exposure

Sensitization	No sensitization responses were observed.
Mutagenic effects:	Did not show mutagenic or teratogenic effects in animal experiments.
Carcinogenicity	This product does not contain any carcinogens or potential carcinogens as listed by OSHA, IARC or NTP.
Reproductive toxicity	This product does not contain any known or suspected reproductive hazards.
STOT - Single Exposure	None under normal use conditions.
STOT - Repeated Exposure	None under normal use conditions.
Aspiration hazard	Not applicable.

Numerical measures of toxicity - Product Information

The following values are calculated based on chapter 3.1 of the GHS document .

ATEmix (oral)	96579 mg/kg
ATEmix (dermal)	37798 mg/kg
ATEmix (inhalation-dust/mist)	466 mg/l
ATEmix (inhalation-vapor)	21909 mg/l

12. ECOLOGICAL INFORMATION

Ecotoxicity

Harmful to aquatic life with long lasting effects

0.18203% of the mixture consists of components(s) of unknown hazards to the aquatic environment

Persistence and degradability
No information available.

Bioaccumulation
No information available.

Mobility
The product is insoluble and floats on water.

13. DISPOSAL CONSIDERATIONS

Waste treatment methods

Disposal of wastes	Disposal should be in accordance with applicable regional, national and local laws and regulations.

Contaminated packaging Do not reuse container.

14. TRANSPORT INFORMATION

DOT Not Regulated

TDG Not Regulated

IATA-DGR Not Regulated

IMO / IMDG Not Regulated

15. REGULATORY INFORMATION

International Inventories

TSCA:	Listed in TSCA
DSL:	All of the components in this product are listed in DSL
EINECS/ELINCS	This product complies with EINECS/ELINCS
CHINA:	This product complies with China IECSC.
KECL:	This product complies with Korea KECL.
PICCS:	This product complies with Philippines PICCS.
AICS:	All the constituents of this material are listed on the Australian AICS

Legend:

TSCA - United States Toxic Substances Control Act Section 8(b) Inventory
DSL/NDSL - Canadian Domestic Substances List/Non-Domestic Substances List
EINECS/ELINCS - European Inventory of Existing Chemical Substances/European List of Notified Chemical Substances
ENCS - Japan Existing and New Chemical Substances
IECSC - China Inventory of Existing Chemical Substances
KECL - Korean Existing and Evaluated Chemical Substances
PICCS - Philippines Inventory of Chemicals and Chemical Substances
AICS - Australian Inventory of Chemical Substances

Canada HPR Statement

This product has been classified in accordance with the hazard criteria of the Hazardous Products Regulations and the SDS contains all the information required by the Hazardous Products Regulations (WHMIS 2015).

US Federal Regulations

SARA 313

Section 313 of Title III of the Superfund Amendments and Reauthorization Act of 1986 (SARA). This product does not contain any chemicals which are subject to the reporting requirements of the Act and Title 40 of the Code of Federal Regulations, Part 372

SARA 311/312 Hazard Categories

Acute Health Hazard	No
Chronic Health Hazard	No
Fire Hazard	No
Sudden release of pressure hazard	No
Reactive Hazard	No

CWA (Clean Water Act)
This product does not contain any substances regulated as pollutants pursuant to the Clean Water Act (40 CFR 122.21 and 40 CFR 122.42)

CERCLA
This material, as supplied, does not contain any substances regulated as hazardous substances under the Comprehensive Environmental Response Compensation and Liability Act (CERCLA) (40 CFR 302) or the Superfund Amendments and Reauthorization Act (SARA) (40 CFR 355). There may be specific reporting requirements at the local, regional, or state level pertaining to releases of this material

State Regulations (RTK)

California Proposition 65
This product does not contain any Proposition 65 chemicals

U.S. State Right-to-Know Regulations

U.S. EPA Label Information
EPA Pesticide Registration Number Not applicable

16. OTHER INFORMATION

NFPA:
Health: 1
Flammability: 1
Instability 0
NFPA/HMIS * for Carc, Muta, Tera, Specific Organ *
HMIS health rating:
Health: 1
Flammability: 1
Physical hazards 0
Personal protection B

Issue Date	01-Jun-2018
Revision Date	01-Jun-2018

Revision Note
Not applicable
Disclaimer
The information provided in this Safety Data Sheet is correct to the best of our knowledge, information and belief at the date of its publication. The information given is designed only as a guidance for safe handling, use, processing, storage, transportation, disposal and release and is not to be considered a warranty or quality specification. The information relates only to the specific material designated and may not be valid for such material used in combination with any other materials or in any process, unless specified in the text.

End of Safety Data Sheet

AIR LIQUIDE

MATERIAL SAFETY DATA SHEET

Prepared to U.S. OSHA, CMA, ANSI and Canadian WHMIS Standards

1. PRODUCT IDENTIFICATION

CHEMICAL NAME; CLASS: NONFLAMMABLE GAS MIXTURE

Containing One or More of the Following Components in a Nitrogen Balance Gas:
Oxygen 0-23.5%; Isobutylene, 0.0005-0.9%

SYNONYMS: Not Applicable **CHEMICAL FAMILY NAME:** Not Applicable **FORMULA:** Not Applicable

Document Number: 50054

Note: The Material Safety Data Sheet is for this gas mixture supplied in cylinders with 33 cubic feet (935 liters) or less gas capacity (DOT - 39 cylinders). This MSDS has been developed for various gas mixtures with the composition of components within the ranges listed in Section 2 (Composition and Information on Ingredients). Refer to the product label for information on the actual composition of the product.

PRODUCT USE:	Calibration of Monitoring and Research Equipment
U.S. SUPPLIER/MANUFACTURER'S NAME:	CALGAZ
ADDRESS:	821 Chesapeake Drive Cambridge, MD 21613
BUSINESS PHONE:	1-410-228-6400 (8 a.m. to 5 p.m. U.S. EST)
General MSDS Information:	1-713-868-0440
Fax on Demand:	1-800-231-1366
EMERGENCY PHONE:	
Chemtrec: United States/Canada/Puerto Rico:	1-800-424-9300 [24-hours]
Chemtrec International:	1-703-527-3887 [24-hours]

2. COMPOSITION and INFORMATION ON INGREDIENTS

CHEMICAL NAME	CAS #	mole %	EXPOSURE LIMITS IN AIR					
			ACGIH-TLV		OSHA-PEL		NIOSH	OTHER
			TWA ppm	STEL ppm	TWA ppm	STEL ppm	IDLH ppm	ppm
Isobutylene	115-11-7	0.0005-0.9%	There are no specific exposure limits for Isobutylene.					
Oxygen	7782-44-7	0-23.5%	There are no specific exposure limits for Oxygen.					
Nitrogen	7727-37-9	Balance	There are no specific exposure limits for Nitrogen. Nitrogen is a simple asphyxiant (SA). Oxygen levels should be maintained above 19.5%.					

NE = Not Established. See Section 16 for Definitions of Terms Used.

NOTE (1): ALL WHMIS required information is included in appropriate sections based on the ANSI Z400.1-1998 format. This gas mixture has been classified in accordance with the hazard criteria of the CPR and the MSDS contains all the information required by the CPR.

3. HAZARD IDENTIFICATION

EMERGENCY OVERVIEW: This is a colorless, odorless gas mixture. Releases of this gas mixture may produce oxygen-deficient atmospheres (especially in confined spaces or other poorly-ventilated environments); individuals in such atmospheres may be asphyxiated. Isobutylene, a component of this gas mixture, may cause drowsiness and other central nervous system effects in high concentrations; however, due to its low concentration in this gas mixture, this is unlikely to occur.

SYMPTOMS OF OVER-EXPOSURE BY ROUTE OF EXPOSURE: The most significant route of over-exposure for this gas mixture is by inhalation.

INHALATION: Due to the small size of an individual cylinder of this gas mixture, no unusual health effects from over-exposure to the product are anticipated under routine circumstances of use. The chief health hazard associated with this gas mixture is when this gas mixture contains less than 19.5% Oxygen and is released in a small, poorly-ventilated area (i.e. an enclosed or confined space). Under this circumstance, an oxygen-deficient environment may occur. Individuals breathing such an atmosphere may experience symptoms which include headaches, ringing in ears, dizziness, drowsiness, unconsciousness, nausea, vomiting, and depression of all the senses. Under some circumstances of over-exposure, death may occur. The effects associated with various levels of oxygen are as follows:

CONCENTRATION OF OXYGEN	OBSERVED EFFECT
12-16% Oxygen:	Breathing and pulse rate increase, muscular coordination slightly disturbed.
10-14% Oxygen:	Emotional upset, abnormal fatigue, disturbed respiration.
6-10% Oxygen:	Nausea, vomiting, collapse, or loss of consciousness.
Below 6%:	Convulsive movements, poss ble respiratory collapse, and death.

HEALTH EFFECTS OR RISKS FROM EXPOSURE: An Explanation in Lay Terms. Over-exposure to this gas mixture may cause the following health effects:

ACUTE: Due to the small size of the individual cylinder of this gas mixture, no unusual health effects from exposure to the product are anticipated under routine circumstances of use. The most significant hazard associated with this gas mixture when it contains less than 19.5% oxygen is the potential for exposure to oxygen-deficient atmospheres. Symptoms of oxygen deficiency include respiratory difficulty, ringing in ears, headaches, shortness of breath, wheezing, headache, dizziness, indigestion, nausea, unconsciousness, and death. The skin of a victim of over-exposure may have a blue color. Additionally, Isobutylene, a component of this gas mixture, may cause drowsiness or central nervous system effects in high concentrations; however, due to its low concentration in this gas mixture, this is unl kely to occur.

CHRONIC: Chronic exposure to oxygen-deficient atmospheres (below 18% oxygen in air) may affect the heart and nervous system.

TARGET ORGANS: ACUTE: Respiratory system, eyes. CHRONIC: Heart, cardiovascular system, central nervous system.

HAZARDOUS MATERIAL IDENTIFICATION SYSTEM

HEALTH HAZARD	(BLUE)	1
FLAMMABILITY HAZARD	(RED)	0
PHYSICAL HAZARD	(YELLOW)	0

PROTECTIVE EQUIPMENT

EYES	RESPIRATORY	HANDS	BODY
See Section 8			

For Rou ine Industrial Use and Handling Applications

4. FIRST-AID MEASURES

RESCUERS SHOULD NOT ATTEMPT TO RETRIEVE VICTIMS OF EXPOSURE TO THIS GAS MIXTURE WITHOUT ADEQUATE PERSONAL PROTECTIVE EQUIPMENT. At a minimum, Self-Contained Breathing Apparatus must be worn.

No unusual health effects are anticipated after exposure to this gas mixture, due to the small cylinder size. If any adverse symptom develops after over-exposure to this gas mixture, remove victim(s) to fresh air as quickly as poss ble. Only trained personnel should administer supplemental oxygen and/or cardio-pulmonary resuscitation if necessary. Victim(s) who experience any adverse effect after over-exposure to this gas mixture must be taken for medical attention. Rescuers should be taken for medical attention if necessary. Take a copy of the label and the MSDS to physician or other health professional with victim(s).

MEDICAL CONDITIONS AGGRAVATED BY EXPOSURE: Acute or chronic respiratory conditions may be aggravated by over-exposure to this gas mixture.

RECOMMENDATIONS TO PHYSICIANS: Administer oxygen, if necessary; treat symptoms and eliminate exposure.

5. FIRE-FIGHTING MEASURES

FLASH POINT: Not applicable.

AUTOIGNITION TEMPERATURE: Not applicable.

FLAMMABLE LIMITS (in air by volume, %):

Lower (LEL): Not applicable.
Upper (UEL): Not applicable.

FIRE EXTINGUISHING MATERIALS: Non-flammable gas mixture. Use extinguishing media appropriate for surrounding fire.

UNUSUAL FIRE AND EXPLOSION HAZARDS: This gas mixture is not flammable; however, containers, when involved in fire, may rupture or burst in the heat of the fire.

Explosion Sensitivity to Mechanical Impact: Not sensitive.
Explosion Sensitivity to Static Discharge: Not sensitive.

SPECIAL FIRE-FIGHTING PROCEDURES: Structural firefighters must wear Self-Contained Breathing Apparatus and full protective equipment.

NFPA RATING

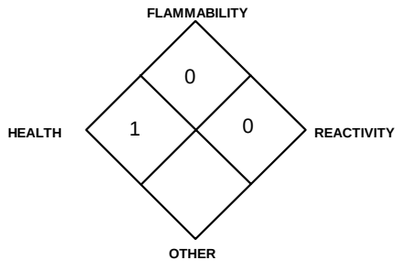

6. ACCIDENTAL RELEASE MEASURES

LEAK RESPONSE: Due to the small size and content of the cylinder, an accidental release of this gas mixture presents significantly less risk of an oxygen deficient environment and other safety hazards than a similar release from a larger cylinder. However, as with any chemical release, extreme caution must be used during emergency response procedures. In the event of a release in which the atmosphere is unknown, and in which other chemicals are potentially involved, evacuate immediate area. Such releases should be responded to by trained personnel using pre-planned procedures. Proper protective equipment should be used. In case of a leak, clear the affected area, protect people, and respond with trained personnel.

Allow the gas mixture to dissipate. If necessary, monitor the surrounding area (and the original area of the release) for oxygen. Oxygen levels must be above 19.5% before non-emergency personnel are allowed to re-enter area.

If leaking incidentally from the cylinder, contact your supplier.

7. HANDLING and USE

WORK PRACTICES AND HYGIENE PRACTICES: Be aware of any signs of dizziness or fatigue; exposures to fatal concentrations of this gas mixture could occur without any significant warning symptoms, due to oxygen deficiency. Do not attempt to repair, adjust, or in any other way modify the cylinders containing this gas mixture. If there is a malfunction or another type of operational problem, contact nearest distr butor immediately.

STORAGE AND HANDLING PRACTICES: Cylinders should be firmly secured to prevent falling or being knocked-over. Cylinders must be protected from the environment, and preferably kept at room temperature (approximately 21 C [70 F]). Cylinders should be stored in dry, well-ventilated areas, away from sources of heat, ignition, and direct sunlight. Protect cylinders against physical damage. Full and empty cylinders should be segregated. Use a first-in, first-out inventory system to prevent full containers from being stored for long periods of time. These cylinders are not refillable. **WARNING! Do not refill DOT 39 cylinders. To do so may cause personal injury or property damage.**

SPECIAL PRECAUTIONS FOR HANDLING GAS CYLINDERS: WARNING! Compressed gases can present significant safety hazards. During cylinder use, use equipment designed for these specific cylinders. Ensure all lines and equipment are rated for proper service pressure.

PROTECTIVE PRACTICES DURING MAINTENANCE OF CONTAMINATED EQUIPMENT: Follow practices indicated in Section 6 (Accidental Release Measures). Make certain that application equipment is locked and tagged-out safely. Always use product in areas where adequate ventilation is provided.

8. EXPOSURE CONTROLS - PERSONAL PROTECTION

VENTILATION AND ENGINEERING CONTROLS: No special ventilation systems or engineering controls are needed under normal circumstances of use. As with all chemicals, use this gas mixture in well-ventilated areas. If this gas mixture is used in a poorly-ventilated area, install automatic monitoring equipment to detect the levels of Nitrous Oxide and Oxygen.

RESPIRATORY PROTECTION: No special respiratory protection is required under normal circumstances of use. Maintain oxygen levels above 19.5% in the workplace. Use supplied air respiratory protection when oxygen levels are below 19.5%, or during emergency response to a release of this gas mixture. During an emergency situation, before entering the area, check the concentration of Methane and Oxygen. If respiratory protection is needed, use only protection authorized in the U.S. Federal OSHA Standard (29 CFR 1910.134), applicable U.S. State regulations, or the Canadian CSA Standard Z94.4-93 and applicable standards of Canadian Provinces. Oxygen levels below 19.5% are considered IDLH by OSHA. In such atmospheres, use of a full-facepiece pressure/demand SCBA or a full facepiece, supplied air respirator with auxiliary self-contained air supply is required under OSHA's Respiratory Protection Standard (1910.134-1998).

EYE PROTECTION: Safety glasses. If necessary, refer to U.S. OSHA 29 CFR 1910.133 or appropriate Canadian Standards.

HAND PROTECTION: Wear leather gloves when handling cylinders. Chemically resistant gloves should be worn when using this gas mixture. If necessary, refer to U.S. OSHA 29 CFR 1910.138 or appropriate Standards of Canada.

BODY PROTECTION: No special protection is needed under normal circumstances of use. If a hazard of injury to the feet exists due to falling objects, rolling objects, where objects may pierce the soles of the feet or where employee's feet may be exposed to electrical hazards, use foot protection, as described in U.S. OSHA 29 CFR 1910.136.

9. PHYSICAL and CHEMICAL PROPERTIES

The following information is for Nitrogen, a main component of this gas mixture.

GAS DENSITY @ 32°F (0°C) and 1 atm: 0.072 lbs/ ft^3 (1.153 kg/m^3)
BOILING POINT: -195.8°C (-320.4°F)
FREEZING/MELTING POINT @ 10 psig: -210°C (-345.8°F)
SPECIFIC GRAVITY (air = 1) @ 70°F (21.1°C): 0.906
pH: Not applicable.
SOLUBILITY IN WATER vol/vol @ 32°F (0°C) and 1 atm: 0.023
MOLECULAR WEIGHT: 28.01
EVAPORATION RATE (nBuAc = 1): Not applicable.
EXPANSION RATIO: Not applicable.
ODOR THRESHOLD: Not applicable.
SPECIFIC VOLUME (ft^3/lb): 13.8
VAPOR PRESSURE @ 70°F (21.1°C) psig: Not applicable.
COEFFICIENT WATER/OIL DISTRIBUTION: Not applicable.

The following information is for Oxygen, a main component of this gas mixture.

GAS DENSITY @ 32°F (0°C) and 1 atm: 0.083 lb/cu ft (1.326 kg/m^3)
FREEZING/MELTING POINT @ 10 psig: -218.8°C (-361.8°F)
BOILING POINT: -183.0°C (-297.4°F)
SPECIFIC GRAVITY (air = 1) @ 70°F (21.1°C): 1.105
pH: Not applicable.
SOLUBILITY IN WATER vol/vol at 32°F (0°C) and 1 atm: 0.04.91
MOLECULAR WEIGHT: 32.00
EVAPORATION RATE (nBuAc = 1): Not applicable.
EXPANSION RATIO: Not applicable.
ODOR THRESHOLD: Not applicable.
VOLUME (ft^3/lb): 12.1
VAPOR PRESSURE @ 70°F (21.1°C) psig: Not applicable.
COEFFICIENT WATER/OIL DISTRIBUTION: Not applicable.

The following information is for the gas mixture.

APPEARANCE AND COLOR: This is a colorless, odorless gas mixture.

HOW TO DETECT THIS SUBSTANCE (warning properties): There are no unusual warning properties associated with a release of this gas mixture. In terms of leak detection, fittings and joints can be painted with a soap solution to detect leaks, which will be indicated by a bubble formation.

10. STABILITY and REACTIVITY

STABILITY: Normally stable in gaseous state.
DECOMPOSITION PRODUCTS: The thermal decomposition products of Isobutylene include carbon oxides. The other components of this gas mixture do not decompose, per se, but can react with other compounds in the heat of a fire.
MATERIALS WITH WHICH SUBSTANCE IS INCOMPATIBLE: Titanium will burn in the Nitrogen component of this gas mixture. Lithium reacts slowly with Nitrogen at ambient temperatures. The Isobutylene component of this gas mixture is also incompatible with strong oxidizers (i.e. chlorine, bromine pentafluoride, oxygen difluoride, and nitrogen trifluoride).
HAZARDOUS POLYMERIZATION: Will not occur.
CONDITIONS TO AVOID: Contact with incompat ble materials. Cylinders exposed to high temperatures or direct flame can rupture or burst.

11. TOXICOLOGICAL INFORMATION

TOXICITY DATA: The following toxicology data are available for the components of this gas mixture:

ISOBUTYLENE:
LC_{50} (inhalation, rat) = 620,000 mg/kg/4 hours
LC_{50} (inhalation, mouse) = 415,000 mg/kg
NITROGEN:
There are no specific toxicology data for Nitrogen. Nitrogen is a simple asphyxiant, which acts to displace oxygen in the environment.

SUSPECTED CANCER AGENT: The components of this gas mixture are not found on the following lists: FEDERAL OSHA Z LIST, NTP, CAL/OSHA, and IARC; therefore, they are not considered to be, nor suspected to be, cancer-causing agents by these agencies.
IRRITANCY OF PRODUCT: Contact with rapidly expanding gases can be irritating to exposed skin and eyes.
SENSITIZATION TO THE PRODUCT: The components of this gas mixture are not known to cause human skin or respiratory sensitization.
REPRODUCTIVE TOXICITY INFORMATION: Listed below is information concerning the effects of this gas mixture and its components on the human reproductive system.

Mutagenicity: No mutagenicity effects have been descr bed for the components in this gas mixture.
Embryotoxcity: No embryotoxic effects have been described for the components in this gas mixture.
Teratogenicity: No teratogenicity effects have been described for the components in this gas mixture.
Reproductive Toxicity: No reproductive toxicity effects have been descr bed for the components in gas mixture.

A mutagen is a chemical which causes permanent changes to genetic material (DNA) such that the changes will propagate through generation lines. An embryotoxin is a chemical which causes damage to a developing embryo (i.e. within the first eight weeks of pregnancy in humans), but the damage does not propagate across generational lines. A teratogen is a chemical which causes damage to a developing fetus, but the damage does not propagate across generational lines. A reproductive toxin is any substance which interferes in any way with the reproductive process.
BIOLOGICAL EXPOSURE INDICES (BEIs): Currently, Biological Exposure Indices (BEIs) are not applicable for the components of this gas mixture.

12. ECOLOGICAL INFORMATION

ENVIRONMENTAL STABILITY: The components of this gas mixture occur naturally in the atmosphere. The gas will be dissipated rapidly in well-ventilated areas. The following environmental data are applicable to the components of this gas mixture.

OXYGEN: Water Solubility = 1 volume Oxygen/32 volumes water at 20 C. Log K_{ow} = -0.65
NITROGEN: Water Solubility = 2.4 volumes Nitrogen/100 volumes water at 0 C. 1.6 volumes Nitrogen/100 volumes water at 20 C.

EFFECT OF MATERIAL ON PLANTS or ANIMALS: No evidence is currently available on the effects of this gas mixture on plant and animal life.
EFFECT OF CHEMICAL ON AQUATIC LIFE: No evidence is currently available on the effects of this gas mixture on aquatic life.

13. DISPOSAL CONSIDERATIONS

PREPARING WASTES FOR DISPOSAL PREPARING WASTES FOR DISPOSAL: Waste disposal must be in accordance with appropriate Federal, State, and local regulations. Cylinders with undesired residual product may be safely vented outdoors with the proper regulator. For further information, refer to Section 16 (Other Information).

14. TRANSPORTATION INFORMATION

THIS GAS MIXTURE IS HAZARDOUS AS DEFINED BY 49 CFR 172.101 BY THE U.S. DEPARTMENT OF TRANSPORTATION.

PROPER SHIPPING NAME: Compressed gases, n.o.s. (*Oxygen, Nitrogen)*or the gas component with the next highest concentration next to Nitrogen.
HAZARD CLASS NUMBER and DESCRIPTION: 2.2 (Non-Flammable Gas)
UN IDENTIFICATION NUMBER: UN 1956
PACKING GROUP: Not applicable.
DOT LABEL(S) REQUIRED: Class 2.2 (Non-Flammable Gas)
NORTH AMERICAN EMERGENCY RESPONSE GUIDEBOOK NUMBER (2000): 126
MARINE POLLUTANT: The components of this gas mixture are not classified by the DOT as Marine Pollutants (as defined by 49 CFR 172.101, Appendix B).
SPECIAL SHIPPING INFORMATION: Cylinders should be transported in a secure position, in a well-ventilated vehicle. The transportation of compressed gas cylinders in automobiles or in closed-body vehicles can present serious safety hazards. If transporting these cylinders in vehicles, ensure these cylinders are not exposed to extremely high temperatures (as may occur in an enclosed vehicle on a hot day). Additionally, the vehicle should be well-ventilated during transportation.
Note: DOT 39 Cylinders ship in a strong outer carton (outer package). Pertinent shipping information goes on the outside of the outer package. DOT 39 Cylinders do not have transportation information on the cylinder itself.

TRANSPORT CANADA TRANSPORTATION OF DANGEROUS GOODS REGULATIONS: This gas is considered as Dangerous Goods, per regulations of Transport Canada.

PROPER SHIPPING NAME: Compressed gases, n.o.s. (*Oxygen, Nitrogen)*or the gas component with the next highest concentration next to Nitrogen.
HAZARD CLASS NUMBER and DESCRIPTION: 2.2 (Non-Flammable Gas)
UN IDENTIFICATION NUMBER: UN 1956
PACKING GROUP: Not Applicable
HAZARD LABEL: Class 2.2 (Non-Flammable Gas)
SPECIAL PROVISIONS: None
EXPLOSIVE LIMIT AND LIMITED QUANTITY INDEX: 0.12
ERAP INDEX: None
PASSENGER CARRYING SHIP INDEX: None
PASSENGER CARRYING ROAD VEHICLE OR PASSENGER CARRYING RAILWAY VEHICLE INDEX: 75
NORTH AMERICAN EMERGENCY RESPONSE GUIDEBOOK NUMBER (2000): 126
NOTE: Shipment of compressed gas cylinders via Public Passenger Road Vehicle is a violation of Canadian law (Transport Canada Transportation of Dangerous Goods Act, 1992).

15. REGULATORY INFORMATION

ADDITIONAL U.S. REGULATIONS:
U.S. SARA REPORTING REQUIREMENTS: The components of this gas mixture are not subject to the reporting requirements of Sections 302, 304, and 313 of Title III of the Superfund Amendments and Reauthorization Act.
U.S. SARA THRESHOLD PLANNING QUANTITY: There are no specific Threshold Planning Quantities for this gas mixture. The default Federal MSDS submission and inventory requirement filing threshold of 10,000 b (4,540 kg) may apply, per 40 CFR 370.20.
U.S. TSCA INVENTORY STATUS: The components of this gas mixture are listed on the TSCA Inventory.
U.S. CERCLA REPORTABLE QUANTITY (RQ): Not applicable.
OTHER U.S. FEDERAL REGULATIONS:

- No component of this gas mixture is subject to the requirements of CFR 29 1910.1000 (under the 1989 PELs).
- Isobutylene is subject to the reporting requirements of Section 112(r) of the Clean Air Act. The Threshold Quantity for this gas is 10,000 pounds.
- The regulations of the Process Safety Management of Highly Hazardous Chemicals are not applicable (29 CFR 1910.119).
- This gas mixture does not contain any Class I or Class II ozone depleting chemicals (40 CFR Part 82).

15. REGULATORY INFORMATION (continued)

- Nitrogen and Oxygen are not listed as Regulated Substances, per 40 CFR, Part 68, of the Risk Management for Chemical Releases. Isobutylene is listed under this regulation in Table 3 as Regulated Substances (Flammable Substances), in quantities of 10,000 lbs (4,554 kg) or greater.

U.S. STATE REGULATORY INFORMATION: The components of this gas mixture are covered under the following specific State regulations:

Alaska - Designated Toxic and Hazardous Substances: No.
California - Permissible Exposure Limits for Chemical Contaminants: Nitrogen.
Florida - Substance List: Oxygen, Isobutylene.
Illinois - Toxic Substance List: No.
Kansas - Section 302/313 List: No.
Massachusetts - Substance List: Oxygen, Isobutylene.
Michigan - Critical Materials Register: No.
Minnesota - List of Hazardous Substances: No.
Missouri - Employer Information/Toxic Substance List: No.
New Jersey - Right to Know Hazardous Substance List: Oxygen, Nitrogen, Isobutylene.
North Dakota - List of Hazardous Chemicals, Reportable Quantities: No.
Pennsylvania - Hazardous Substance List: Oxygen, Nitrogen, Isobutylene.
Rhode Island - Hazardous Substance List: Oxygen, Nitrogen.
Texas - Hazardous Substance List: No.
West Virginia - Hazardous Substance List: No.
Wisconsin - Toxic and Hazardous Substances: : No.

CALIFORNIA SAFE DRINKING WATER AND TOXIC ENFORCEMENT ACT (PROPOSITION 65): No component of this gas mixture is on the California Proposition 65 lists.

ADDITIONAL CANADIAN REGULATIONS:
CANADIAN DSL/NDSL INVENTORY STATUS: The components of this gas mixture are listed on the DSL Inventory.
CANADIAN ENVIRONMENTAL PROTECTION ACT (CEPA) PRIORITIES SUBSTANCES LISTS: The components of this gas mixture are not on the CEPA Priorities Substances Lists.
CANADIAN WHMIS REGULATIONS: This gas mixture is categorized as a Controlled Product, Hazard Class A, as per the Controlled Product Regulations.

16. OTHER INFORMATION

INFORMATION ABOUT DOT-39 NRC (Non-Refillable Cylinder) PRODUCTS

DOT 39 cylinders ship as hazardous materials when full. Once the cylinders are relieved of pressure (empty) they are not considered hazardous material or waste. Residual gas in this type of cylinder is not an issue because toxic gas mixtures are prohibited. Calibration gas mixtures typically packaged in these cylinders are Nonflammable n.o.s., UN 1956. A small percentage of cal bration gases packaged in DOT 39 cylinders are flammable or oxidizing gas mixtures.

For disposal of used DOT-39 cylinders, it is acceptable to place them in a landfill if local laws permit. Their disposal is no different than that employed with other DOT containers such as spray paint cans, household aerosols, or disposable cylinders of propane (for camping, torch etc.). When feasible, we recommended recycling for scrap metal content. CALGAZ will do this for any customer that wishes to return cylinders to us prepaid. All that is required is a phone call to make arrangements so we may anticipate arrival. Scrapping cylinders involves some preparation before the metal dealer may accept them. We perform this operation as a service to valued customers who want to participate.

MIXTURES: When two or more gases or liquefied gases are mixed, their hazardous properties may combine to create additional, unexpected hazards. Obtain and evaluate the safety information for each component before you produce the mixture. Consult an Industrial Hygienist or other trained person when you make your safety evaluation of the end product. Remember, gases and liquids have properties which can cause serious injury or death.

Further information about the handling of compressed gases can be found in the following pamphlets published by: Compressed Gas Association Inc. (CGA), 1725 Jefferson Davis Highway, Suite 1004, Arlington, VA 22202-4102. Telephone: (703) 412-0900.

P-1 *"Safe Handling of Compressed Gases in Containers"*
AV-1 *"Safe Handling and Storage of Compressed Gases"*
"Handbook of Compressed Gases"

AIR LIQUIDE™

This Material Safety Data Sheet is offered pursuant to OSHA's Hazard Communication Standard, 29 CFR, 1910.1200. Other government regulations must be reviewed for applicability to this gas mixture. To the best of CALGAZ knowledge, the information contained herein is reliable and accurate as of this date; however, accuracy, suitability or completeness are not guaranteed and no warranties of any type, either express or implied, are provided. The information contained herein relates only to this specific product. If this gas mixture is combined with other materials, all component properies must be considered. Data may be changed from time to time. Be sure to consult the latest edition.

MATERIAL SAFETY DATA SHEET

Topcare, 70% Isopropyl Alcohol Wipes

Original: December 1, 2006 Revised: March 23, 2011

CUSTOM MANUFACTURED PRODUCTS
P.O. Box 6648, Greenville, SC 29606-6648
(864)527-9715

Emergency Telephone Number: (800)424-9300 CHEMTREC

Section 1. PRODUCT IDENTIFICATION

PRODUCT NAME: Topcare, 70% Isopropyl Alcohol Wipes
CHEMICAL FAMILY: Wipes
CAS NUMBER: 67-63-0
CHEMICAL FORMULA: $(CH_3)_2CHOH$ (70% in aqueous solution)
SYNONYMS: Isopropanol, Rubbing alcohol, IPA, 2-Propyl alcohol

Section 2. COMPOSITION/INFORMATION ON INGREDIENTS

Composition	CAS No.	Vol%	TLV/PEL
Isopropyl Alcohol	67-63-0	70	400/400
Water	7732-18-5	30	

Section 3. HAZARDS IDENTIFICATION

Physical State: Towelette impregnated with clear, colorless liquid.
Odor: Isopropyl Alcohol.

POTENTIAL HEALTH EFFECTS:

ROUTES OF EXPOSURE: Eyes. Skin. Inhalation. Ingestion.
EYE CONTACT:
Liquid contact with eyes may cause irritation.
SKIN CONTACT:
May cause skin irritation or redness.
INGESTION:
Do not swallow. Ingestion of wipe solution may cause gastric disturbances.
INHALATION:
Vapors may irritate the respiratory tract.

Medical Conditions Aggravated by Exposure to Product: None known.

Chronic exposure may cause skin irritation and cracking due to skin drying effects.

Section 4. FIRST AID MEASURES

EYE CONTACT:
Irrigate eyes with plenty of water for at least 15 minutes, lifting the lower and upper eyelids. Remove any contact lenses to ensure thorough flushing. DO NOT allow victim to rub or keep eyes closed. Get medical attention immediately if irritation persists.

SKIN CONTACT:
Immediately flush skin with plenty of water for at least 15 minutes while removing contaminated clothing. Get medical attention if irritation develops or persists. Wash clothing before reuse.

INGESTION:
If swallowed, DO NOT INDUCE VOMITING. Give no more than 2 glasses of water. Never give anything by mouth to an unconscious person. Get medical attention immediately.

INHALATION:
Remove to fresh air. If breathing becomes difficult or respiratory irritation occurs, seek medical attention.

Section 5. FIRE-FIGHTING MEASURES

Flash Point (TCC): 24 °C (75 °F)
Autoignition Temperature: 399 °C (750.20 °F)
Lower Explosion Limits: 2.0 vol %
Upper Explosion Limits: 12.7 at 200 °F

EXTINGUISHING MEDIA:
For small fires, use carbon dioxide, dry chemical, dry sand, or alcohol-resistant foam.

FIRE-FIGHTING INSTRUCTIONS:
Wear a NIOSH-approved self-contained breathing apparatus in positive-pressure demand and protective clothing. Evacuate area of unprotected personnel.

FIRE & EXPLOSION HAZARDS:
Containers may explode under fire conditions.

DECOMPOSITION PRODUCTS:
Carbon monoxide, carbon dioxide.

Section 6. ACCIDENTAL RELEASE MEASURES

STEPS TO BE TAKEN IF MATERIAL IS RELEASED OR SPILLED:
Provide adequate ventilation. Absorb with a suitable absorbent (such as a paper towel) and dispose. Absorb and containerize. Wash residual down to sanitary sewer. Contact the sanitary treatment facility in advance for larger spills to assure ability to process washed down material.

Section 7. HANDLING AND STORAGE

HANDLING:
Wash thoroughly after handling. Use with adequate ventilation.

STORAGE:
Keep containers tightly closed when not in use. Store in a cool, well ventilated area.

Section 8. EXPOSURE CONTROLS / PERSONAL PROTECTION

PERSONAL PROTECTION EQUIPMENT:

EYE/FACE PROTECTION:

Towelette impregnated with clear, colorless liquid. Keep away from face and eyes.
SKIN PROTECTION:
Towelette impregnated with clear, colorless liquid. Protective gloves may be worn.
RESPIRATORY PROTECTION:
Towelette impregnated with clear, colorless liquid. Use in a well ventilated area.
VENTILATION:
Use in a well ventilated area.

OTHER CONTROL MEASURES: None

Section 9. PHYSICAL AND CHEMICAL PROPERTIES

Physical State: Towelette impregnated with clear, colorless liquid.
Appearance(solution): Clear liquid
Odor: Alcohol
Solubility in Water: Miscible
% Volatiles by Volume at 21 °C (70 °C): 100
Boiling Point: 82 °C
Melting Point: -88 °C
Specific Gravity (water = 1): <1
Vapor Density (AIR = 1): 2.1
Vapor Pressure (mm Hg): 33 mmHg at 20 °C
Evaporation Rate (Butyl Acetate = 1): 1.7

Section 10. STABILITY AND REACTIVITY

CHEMICAL STABILITY: Stable under normal conditions of use and storage.
CONDITIONS TO AVOID: Avoid contact with open flame, ignition sources.
INCOMPATIBILITY: Strong oxidizing agents. Strong acids and bases.
DECOMPOSITION PRODUCTS: Carbon monoxide, carbon dioxide
HAZARDOUS POLYMERIZATION: Will not occur under normal conditions.

Section 11. TOXICOLOGICAL INFORMATION

ON PRODUCT: No information on the formulated product

ON INGREDIENTS:

Chemical Name	Oral LD_{50} (rat)	Dermal LD_{50} (rabbit)	Inhalation LC_{50} (Rat)
Isopropyl Alcohol	5045 mg/kg	12.8 gm/kg	16,000 ppm/8-hour

Section 12. ECOLOGICAL INFORMATION

ON PRODUCT: This product is not expected to significantly bioaccumulate.

Section 13. DISPOSAL CONSIDERATIONS

DISPOSAL METHOD:
Waste is non-hazardous. Disposal must be made in accordance with applicable federal, state and local regulations.

After use of towelette, discard in trash.

CONTAINER DISPOSAL:
Do not reuse empty container. Rinse thoroughly before discarding. Container is recyclable.

Section 14. TRANSPORT INFORMATION

DOT

Consumer Commodity
ORM-D (Other Regulated Materials, Domestic)

ORM means other regulated material. Consumer Commodity means a material that is packaged and distributed in a form intended or suitable for sale through retail sales agencies or instrumentalities for consumption by individuals for purposes of personal care or household use. This term also includes drugs or medicines.
ORM-D material means a material such as consumer commodity which presents a limited hazard during transportation due to its form, quantity and packaging.

Section 15. REGULATORY INFORMATION

CAS #67-63-0 can be found on the following state right to know lists from CA, PA, MN, MA, or NJ.
California Prop 65 – No significant risk level.

TSCA: TSCA compliant: Isopropyl alcohol; Water

Section 16. OTHER INFORMATION

HMIS RATINGS: Health = 2 Flammability = 3 Reactivity = 1
Hazard rating scale: 0 = Minimal; 1 = Slight; 2 = Moderate; 3 = Serious; 4 = Severe

USERS RESPONSIBILITY/DISCAIMER OF LIABILITY:

The data contained in this Material Safety Data Sheet is believed to be correct. However, since the conditions of use are outside the control of Custom Manufactured Products LLC, it should not be taken as a warranty of legal responsibility. This information is provided solely for your consideration, investigation and verification.

Reason for Revision:
Change to DOT regulations
Flash point, boiling point
Towelette description
Changes made throughout the MSDS

SAFETY DATA SHEET

1. Identification

Product identifier **Knock'er Loose® Penetrating Solvent**

Other means of identification

Product code No. 03020 (Item# 1003270)

Recommended use Penetrant

Recommended restrictions None known.

Manufacturer/Importer/Supplier/Distributor information

Manufactured or sold by:

Company name CRC Industries, Inc.

Address 885 Louis Dr.
Warminster, PA 18974 US

Telephone

General Information 215-674-4300

Technical Assistance 800-521-3168

Customer Service 800-272-4620

24-Hour Emergency 800-424-9300 (US)

(CHEMTREC) 703-527-3887 (International)

Website www.crcindustries.com

2. Hazard(s) identification

Physical hazards	Gases under pressure	Compressed gas
Health hazards	Skin corrosion/irritation	Category 2
	Serious eye damage/eye irritation	Category 2A
	Sensitization, skin	Category 1A
	Aspiration hazard	Category 1
Environmental hazards	Hazardous to the aquatic environment, long-term hazard	Category 2

OSHA defined hazards Not classified.

Label elements



Signal word Danger

Hazard statement Contains gas under pressure; may explode if heated. May be fatal if swallowed and enters airways. Causes skin irritation. May cause an allergic skin reaction. Causes serious eye irritation. Toxic to aquatic life with long lasting effects.

Precautionary statement

Prevention Do not puncture or incinerate container. Do not expose to heat or store at temperatures above 49°C/120°F. Use with adequate ventilation. Open doors and windows or use other means to ensure a fresh air supply during use and while product is drying. If you experience any symptoms listed on this label, increase ventilation or leave the area. Avoid breathing mist or vapor. Wash thoroughly after handling. Contaminated work clothing must not be allowed out of the workplace. Wear protective gloves/eye protection/face protection. Avoid release to the environment.

Response If swallowed: Immediately call a poison center/doctor. Do NOT induce vomiting. If on skin: Wash with plenty of water. If skin irritation or rash occurs: Get medical advice/attention. Take off contaminated clothing and wash before reuse. If in eyes: Rinse cautiously with water for several minutes. Remove contact lenses, if present and easy to do. Continue rinsing. If eye irritation persists: Get medical advice/attention. Collect spillage.

Storage	Store locked up. Protect from sunlight. Store in a well-ventilated place. Exposure to high temperature may cause can to burst.
Disposal	Dispose of contents/container in accordance with local/regional/national regulations.
Hazard(s) not otherwise classified (HNOC)	None known.

3. Composition/information on ingredients

Mixtures

Chemical name	Common name and synonyms	CAS number	%
distillates (petroleum), hydrotreated middle		64742-46-7	40 - 50
dipropylene glycol monomethyl ether acetate		88917-22-0	5 - 10
dipropylene glycol monopropyl ether (dpmp)		29911-27-1	5 - 10
turpentine, oil		8006-64-2	5 - 10
2,6-dimethyl-4-heptanone		108-83-8	3 - 5
carbon dioxide		124-38-9	1 - 3
distillates (petroleum), hydrotreated light		64742-47-8	1 - 3
naphtha (petroleum), hydrotreated heavy		64742-48-9	1 - 3
pine oil		8002-09-3	1 - 3

Specific chemical identity and/or percentage of composition has been withheld as a trade secret.

4. First-aid measures

Inhalation	Move to fresh air. Call a physician if symptoms develop or persist.
Skin contact	Remove contaminated clothing immediately and wash skin with soap and water. If skin irritation or rash occurs: Get medical advice/attention. Wash contaminated clothing before reuse.
Eye contact	Immediately flush eyes with plenty of water for at least 15 minutes. Remove contact lenses, if present and easy to do. Continue rinsing. Get medical attention if irritation develops and persists.
Ingestion	Call a physician or poison control center immediately. Rinse mouth. Do not induce vomiting. If vomiting occurs, keep head low so that stomach content doesn't get into the lungs.
Most important symptoms/effects, acute and delayed	Aspiration may cause pulmonary edema and pneumonitis. Severe eye irritation. Symptoms may include stinging, tearing, redness, swelling, and blurred vision. Skin irritation. May cause redness and pain. May cause an allergic skin reaction. Dermatitis. Rash.
Indication of immediate medical attention and special treatment needed	Provide general supportive measures and treat symptomatically. Keep victim under observation. Symptoms may be delayed.
General information	Ensure that medical personnel are aware of the material(s) involved, and take precautions to protect themselves. Wash contaminated clothing before reuse.

5. Fire-fighting measures

Suitable extinguishing media	Water fog. Foam. Dry chemical powder. Carbon dioxide (CO2).
Unsuitable extinguishing media	None known.
Specific hazards arising from the chemical	Pressurized container may rupture when exposed to heat or flame. Pressurized container may rupture when exposed to heat or flame. During fire, gases hazardous to health may be formed.
Special protective equipment and precautions for firefighters	Firefighters must use standard protective equipment including flame retardant coat, helmet with face shield, gloves, rubber boots, and in enclosed spaces, SCBA.
Fire-fighting equipment/instructions	In case of fire: Stop leak if safe to do so. Move containers from fire area if you can do so without risk. Containers should be cooled with water to prevent vapor pressure build up.
General fire hazards	Contents under pressure. Pressurized container may rupture when exposed to heat or flame.

6. Accidental release measures

Personal precautions, protective equipment and emergency procedures

Keep unnecessary personnel away. Keep people away from and upwind of spill/leak. Keep out of low areas. Many gases are heavier than air and will spread along ground and collect in low or confined areas (sewers, basements, tanks). Wear appropriate protective equipment and clothing during clean-up. Avoid breathing gas, mist or vapor. Emergency personnel need self-contained breathing equipment. Do not touch damaged containers or spilled material unless wearing appropriate protective clothing. Ventilate closed spaces before entering them. Local authorities should be advised if significant spillages cannot be contained. For personal protection, see section 8 of the SDS.

Methods and materials for containment and cleaning up

Eliminate all ignition sources (no smoking, flares, sparks, or flames in immediate area). Keep combustibles (wood, paper, oil, etc.) away from spilled material. Wipe up with absorbent material (e.g. cloth, fleece). Clean surface thoroughly to remove residual contamination. Stop the flow of material, if this is without risk. Prevent product from entering drains. For waste disposal, see section 13 of the SDS.

Environmental precautions

Avoid release to the environment. Inform appropriate managerial or supervisory personnel of all environmental releases. Prevent further leakage or spillage if safe to do so. Avoid discharge into drains, water courses or onto the ground.

7. Handling and storage

Precautions for safe handling

Pressurized container: Do not pierce or burn, even after use. Do not use if spray button is missing or defective. Do not spray on a naked flame or any other incandescent material. Do not smoke while using or until sprayed surface is thoroughly dry. Do not cut, weld, solder, drill, grind, or expose containers to heat, flame, sparks, or other sources of ignition. Use caution around energized equipment. The metal container will conduct electricity if it contacts a live source. This may result in injury to the user from electrical shock and/or flash fire. Avoid breathing mist or vapor. Avoid breathing gas. Avoid contact with eyes, skin, and clothing. Avoid prolonged exposure. Use only in well-ventilated areas. Wear appropriate personal protective equipment. Wash hands thoroughly after handling. Avoid release to the environment. Observe good industrial hygiene practices. For product usage instructions, see the product label.

Conditions for safe storage, including any incompatibilities

Level 1 Aerosol.

Contents under pressure. Do not expose to heat or store at temperatures above 120°F/49°C as can may burst. Do not puncture, incinerate or crush. Do not handle or store near an open flame, heat or other sources of ignition. Store in a well-ventilated place. Store away from incompatible materials (see Section 10 of the SDS).

8. Exposure controls/personal protection

Occupational exposure limits

US. OSHA Table Z-1 Limits for Air Contaminants (29 CFR 1910.1000)

Components	Type	Value	Form
2,6-dimethyl-4-heptanone (CAS 108-83-8)	PEL	290 mg/m3	
		50 ppm	
carbon dioxide (CAS 124-38-9)	PEL	9000 mg/m3	
		5000 ppm	
distillates (petroleum), hydrotreated light (CAS 64742-47-8)	PEL	400 mg/m3	
		100 ppm	
distillates (petroleum), hydrotreated middle (CAS 64742-46-7)	PEL	5 mg/m3	Mist.
		400 mg/m3	
		100 ppm	
naphtha (petroleum), hydrotreated heavy (CAS 64742-48-9)	PEL	400 mg/m3	
		100 ppm	
turpentine, oil (CAS 8006-64-2)	PEL	560 mg/m3	
		100 ppm	

US. ACGIH Threshold Limit Values

Components	Type	Value	Form
2,6-dimethyl-4-heptanone (CAS 108-83-8)	TWA	25 ppm	
carbon dioxide (CAS 124-38-9)	STEL	30000 ppm	
	TWA	5000 ppm	
distillates (petroleum), hydrotreated middle (CAS 64742-46-7)	TWA	5 mg/m3	Inhalable fraction.
turpentine, oil (CAS 8006-64-2)	TWA	20 ppm	

US. NIOSH: Pocket Guide to Chemical Hazards

Components	Type	Value	Form
2,6-dimethyl-4-heptanone (CAS 108-83-8)	TWA	150 mg/m3	
		25 ppm	
carbon dioxide (CAS 124-38-9)	STEL	54000 mg/m3	
		30000 ppm	
	TWA	9000 mg/m3	
		5000 ppm	
distillates (petroleum), hydrotreated light (CAS 64742-47-8)	TWA	100 mg/m3	
distillates (petroleum), hydrotreated middle (CAS 64742-46-7)	STEL	10 mg/m3	Mist.
	TWA	5 mg/m3	Mist.
naphtha (petroleum), hydrotreated heavy (CAS 64742-48-9)	TWA	400 mg/m3	
		100 ppm	
turpentine, oil (CAS 8006-64-2)	TWA	560 mg/m3	
		100 ppm	

Biological limit values No biological exposure limits noted for the ingredient(s).

Appropriate engineering controls Good general ventilation (typically 10 air changes per hour) should be used. Ventilation rates should be matched to conditions. If applicable, use process enclosures, local exhaust ventilation, or other engineering controls to maintain airborne levels below recommended exposure limits. If exposure limits have not been established, maintain airborne levels to an acceptable level. Provide eyewash station.

Individual protection measures, such as personal protective equipment

Eye/face protection Wear safety glasses with side shields (or goggles).

Skin protection

Hand protection Wear protective gloves such as: Nitrile. Rubber.

Other Wear appropriate chemical resistant clothing.

Respiratory protection If engineering controls are not feasible or if exposure exceeds the applicable exposure limits, use a NIOSH-approved cartridge respirator with an organic vapor cartridge. Use a self-contained breathing apparatus in confined spaces and for emergencies. Air monitoring is needed to determine actual employee exposure levels.

Thermal hazards Wear appropriate thermal protective clothing, when necessary.

General hygiene considerations When using do not smoke. Always observe good personal hygiene measures, such as washing after handling the material and before eating, drinking, and/or smoking. Routinely wash work clothing and protective equipment to remove contaminants. Contaminated work clothing should not be allowed out of the workplace.

9. Physical and chemical properties

Appearance

Physical state Liquid.

Form	Aerosol.
Color	Red.
Odor	Pleasant pine.
Odor threshold	Not available.
pH	Not available.
Melting point/freezing point	-121 °F (-85 °C) estimated
Initial boiling point and boiling range	311 °F (155 °C) estimated
Flash point	147 °F (63.9 °C) Tag Closed Cup
Evaporation rate	Moderate
Flammability (solid, gas)	Not available.
Upper/lower flammability or explosive limits	
Flammability limit - lower (%)	0.7 % estimated
Flammability limit - upper (%)	8.3 % estimated
Vapor pressure	1958.7 hPa estimated
Vapor density	> 1 (air = 1)
Relative density	0.86
Solubility (water)	Negligible.
Partition coefficient (n-octanol/water)	Not available.
Auto-ignition temperature	401 °F (205 °C) estimated
Decomposition temperature	Not available.
Viscosity (kinematic)	Not available.
Percent volatile	98.4 % estimated

10. Stability and reactivity

Reactivity	The product is stable and non-reactive under normal conditions of use, storage and transport.
Chemical stability	Material is stable under normal conditions.
Possibility of hazardous reactions	No dangerous reaction known under conditions of normal use.
Conditions to avoid	Avoid heat, sparks, open flames and other ignition sources. Avoid temperatures exceeding the flash point. Contact with incompatible materials.
Incompatible materials	Strong acids. Strong bases. Strong oxidizing agents.
Hazardous decomposition products	Aldehydes. Ketones. Organic acids. Carbon oxides.

11. Toxicological information

Information on likely routes of exposure

Inhalation	Prolonged inhalation may be harmful.
Skin contact	Causes skin irritation. May cause an allergic skin reaction.
Eye contact	Causes serious eye irritation.
Ingestion	Droplets of the product aspirated into the lungs through ingestion or vomiting may cause a serious chemical pneumonia.
Symptoms related to the physical, chemical and toxicological characteristics	Aspiration may cause pulmonary edema and pneumonitis. Severe eye irritation. Symptoms may include stinging, tearing, redness, swelling, and blurred vision. Skin irritation. May cause redness and pain. May cause an allergic skin reaction. Dermatitis. Rash.

Information on toxicological effects

Acute toxicity	May be fatal if swallowed and enters airways. May cause an allergic skin reaction.

Components	Species	Test Results
2,6-dimethyl-4-heptanone (CAS 108-83-8)		
Acute		
Dermal		
LD50	Rabbit	16200 mg/kg
Inhalation		
LC50	Rat	> 5 mg/l, 4 hours
Oral		
LD50	Rat	5285 mg/kg
dipropylene glycol monomethyl ether acetate (CAS 88917-22-0)		
Acute		
Dermal		
LD50	Rabbit	> 2000 mg/kg
Inhalation		
LC50	Rat	> 20 mg/l, 4 Hours
Oral		
LD50	Rat	> 5000 mg/kg
dipropylene glycol monopropyl ether (dpmp) (CAS 29911-27-1)		
Acute		
Dermal		
LD50	Rabbit	> 2000 mg/kg 5340 mg/kg
Oral		
LD50	Rat	> 2000 mg/kg 1475 mg/kg
distillates (petroleum), hydrotreated light (CAS 64742-47-8)		
Acute		
Dermal		
LD50	Rat	> 2000 mg/kg
distillates (petroleum), hydrotreated middle (CAS 64742-46-7)		
Acute		
Dermal		
LD50	Rat	> 2000 mg/kg
Oral		
LD50	Rat	> 5000 mg/kg
naphtha (petroleum), hydrotreated heavy (CAS 64742-48-9)		
Acute		
Dermal		
LD50	Rabbit	> 2000 mg/kg
turpentine, oil (CAS 8006-64-2)		
Acute		
Inhalation		
LC50	Rat	3590 mg/l, 1 Hours
Oral		
LD50	Rat	5760 mg/kg

* Estimates for product may be based on additional component data not shown.

Skin corrosion/irritation Causes skin irritation.

Serious eye damage/eye irritation Causes serious eye irritation.

Respiratory or skin sensitization

ACGIH sensitization

TURPENTINE AND SELECTED MONOTERPENES (CAS 8006-64-2) Dermal sensitization

Respiratory sensitization Not a respiratory sensitizer.

Skin sensitization May cause an allergic skin reaction.

Germ cell mutagenicity No data available to indicate product or any components present at greater than 0.1% are mutagenic or genotoxic.

Carcinogenicity This product is not considered to be a carcinogen by IARC, ACGIH, NTP, or OSHA.

IARC Monographs. Overall Evaluation of Carcinogenicity

Not listed.

OSHA Specifically Regulated Substances (29 CFR 1910.1001-1050)

Not regulated.

US. National Toxicology Program (NTP) Report on Carcinogens

Not listed.

Reproductive toxicity This product is not expected to cause reproductive or developmental effects.

Specific target organ toxicity - single exposure Not classified.

Specific target organ toxicity - repeated exposure Not classified.

Aspiration hazard May be fatal if swallowed and enters airways. If aspirated into lungs during swallowing or vomiting, may cause chemical pneumonia, pulmonary injury or death.

Chronic effects Prolonged inhalation may be harmful.

12. Ecological information

Ecotoxicity Toxic to aquatic life with long lasting effects.

Components		Species	Test Results
dipropylene glycol monomethyl ether acetate (CAS 88917-22-0)			
Aquatic			
Acute			
Crustacea	LC50	Water flea (Daphnia magna)	2701 mg/l, 48 hours
Fish	LC50	Fathead minnow (Pimephales promelas)	151 mg/l, 96 hours
		Rainbow trout,donaldson trout (Oncorhynchus mykiss)	111 mg/l, 96 hours
dipropylene glycol monopropyl ether (dpmp) (CAS 29911-27-1)			
Aquatic			
Acute			
Crustacea	EC50	Water flea (Daphnia magna)	> 100 mg/l, 48 hours
Fish	LC50	Rainbow trout,donaldson trout (Oncorhynchus mykiss)	> 100 mg/l, 96 hours
distillates (petroleum), hydrotreated light (CAS 64742-47-8)			
Aquatic			
Acute			
Crustacea	EC50	Water flea (Daphnia magna)	1.1 mg/l, 48 hours
Fish	LC50	Fathead minnow (Pimephales promelas)	3 mg/l, 96 hours
distillates (petroleum), hydrotreated middle (CAS 64742-46-7)			
Aquatic			
Crustacea	EC50	Water flea (Daphnia pulex)	2.7 - 5.1 mg/l, 48 hours
Fish	LC50	Rainbow trout,donaldson trout (Oncorhynchus mykiss)	8.8 mg/l, 96 hours
			8.8 mg/l, 96 hours

Components		Species	Test Results
naphtha (petroleum), hydrotreated heavy (CAS 64742-48-9)			
Aquatic			
Crustacea	EC50	Water flea (Daphnia pulex)	2.7 - 5.1 mg/l, 48 hours
Fish	LC50	Rainbow trout,donaldson trout (Oncorhynchus mykiss)	8.8 mg/l, 96 hours
			8.8 mg/l, 96 hours

* Estimates for product may be based on additional component data not shown.

Persistence and degradability No data is available on the degradability of this product.

Bioaccumulative potential No data available.

Partition coefficient n-octanol / water (log Kow)

dipropylene glycol monomethyl ether acetate	0.61 OECD 107
dipropylene glycol monopropyl ether (dpmp)	0.87 OECD 107
	0.88 OECD 107

Mobility in soil No data available.

Other adverse effects No other adverse environmental effects (e.g. ozone depletion, photochemical ozone creation potential, endocrine disruption, global warming potential) are expected from this component.

13. Disposal considerations

Disposal of waste from residues / unused products The dispensed liquid product is not a RCRA hazardous waste (See 40 CFR Part 261.20 - 261.33). Contents under pressure. Do not puncture, incinerate or crush. Do not allow this material to drain into sewers/water supplies. Do not contaminate ponds, waterways or ditches with chemical or used container. Dispose in accordance with all applicable regulations.

Hazardous waste code Not regulated.

Contaminated packaging Since emptied containers may retain product residue, follow label warnings even after container is emptied. Empty containers should be taken to an approved waste handling site for recycling or disposal.

14. Transport information

DOT

UN number UN1950
UN proper shipping name Aerosols, non-flammable, Limited Quantity
Transport hazard class(es)
Class 2.2
Subsidiary risk -
Label(s) 2.2
Packing group Not applicable.
Special precautions for user Read safety instructions, SDS and emergency procedures before handling.
Packaging exceptions 306
Packaging non bulk None
Packaging bulk None

IATA

UN number UN1950
UN proper shipping name Aerosols, non-flammable, Limited Quantity
Transport hazard class(es)
Class 2.2
Subsidiary risk -
Packing group Not applicable.
ERG Code 2L
Special precautions for user Read safety instructions, SDS and emergency procedures before handling.
Other information
Passenger and cargo aircraft Allowed with restrictions.
Cargo aircraft only Allowed with restrictions.

IMDG

UN number UN1950
UN proper shipping name AEROSOLS, Limited Quantity

Transport hazard class(es)

Class	2.2
Subsidiary risk	-
Packing group	Not applicable.
Environmental hazards	
Marine pollutant	No.
EmS	F-D, S-U
Special precautions for user	Read safety instructions, SDS and emergency procedures before handling.

15. Regulatory information

US federal regulations This product is a "Hazardous Chemical" as defined by the OSHA Hazard Communication Standard, 29 CFR 1910.1200.

TSCA Section 12(b) Export Notification (40 CFR 707, Subpt. D)

Not regulated.

SARA 304 Emergency release notification

Not regulated.

OSHA Specifically Regulated Substances (29 CFR 1910.1001-1050)

Not regulated.

US EPCRA (SARA Title III) Section 313 - Toxic Chemical: Listed substance

Not listed.

CERCLA Hazardous Substance List (40 CFR 302.4)

Not listed.

CERCLA Hazardous Substances: Reportable quantity

Not listed.

Spills or releases resulting in the loss of any ingredient at or above its RQ require immediate notification to the National Response Center (800-424-8802) and to your Local Emergency Planning Committee.

Clean Air Act (CAA) Section 112 Hazardous Air Pollutants (HAPs) List

Not regulated.

Clean Air Act (CAA) Section 112(r) Accidental Release Prevention (40 CFR 68.130)

Not regulated.

Safe Drinking Water Act (SDWA) Not regulated.

FEMA Priority Substances Respiratory Health and Safety in the Flavor Manufacturing Workplace

2,6-dimethyl-4-heptanone (CAS 108-83-8) Other Flavoring Substances with OSHA PEL's

Food and Drug Administration (FDA) Not regulated.

Superfund Amendments and Reauthorization Act of 1986 (SARA)

Section 311/312 Hazard categories	Immediate Hazard - Yes Delayed Hazard - No Fire Hazard - No Pressure Hazard - Yes Reactivity Hazard - No
SARA 302 Extremely hazardous substance	No

US state regulations

US. California. Candidate Chemicals List. Safer Consumer Products Regulations (Cal. Code Regs, tit. 22, 69502.3, subd. (a))

distillates (petroleum), hydrotreated middle (CAS 64742-46-7)
naphtha (petroleum), hydrotreated heavy (CAS 64742-48-9)

US. New Jersey Worker and Community Right-to-Know Act

2,6-dimethyl-4-heptanone (CAS 108-83-8)
carbon dioxide (CAS 124-38-9)
naphtha (petroleum), hydrotreated heavy (CAS 64742-48-9)
pine oil (CAS 8002-09-3)
turpentine, oil (CAS 8006-64-2)

US. Massachusetts RTK - Substance List

2,6-dimethyl-4-heptanone (CAS 108-83-8)

carbon dioxide (CAS 124-38-9)
naphtha (petroleum), hydrotreated heavy (CAS 64742-48-9)
turpentine, oil (CAS 8006-64-2)

US. Pennsylvania Worker and Community Right-to-Know Law

2,6-dimethyl-4-heptanone (CAS 108-83-8)
carbon dioxide (CAS 124-38-9)
distillates (petroleum), hydrotreated light (CAS 64742-47-8)

US. Rhode Island RTK

2,6-dimethyl-4-heptanone (CAS 108-83-8)
carbon dioxide (CAS 124-38-9)
naphtha (petroleum), hydrotreated heavy (CAS 64742-48-9)
turpentine, oil (CAS 8006-64-2)

US. California Proposition 65

WARNING: This product contains a chemical known to the State of California to cause cancer and birth defects or other reproductive harm.

US - California Proposition 65 - CRT: Listed date/Carcinogenic substance

benzene (CAS 71-43-2)	Listed: February 27, 1987
ethylbenzene (CAS 100-41-4)	Listed: June 11, 2004
naphthalene (CAS 91-20-3)	Listed: April 19, 2002

US - California Proposition 65 - CRT: Listed date/Developmental toxin

benzene (CAS 71-43-2)	Listed: December 26, 1997
toluene (CAS 108-88-3)	Listed: January 1, 1991

US - California Proposition 65 - CRT: Listed date/Male reproductive toxin

benzene (CAS 71-43-2)	Listed: December 26, 1997

Volatile organic compounds (VOC) regulations

EPA

VOC content (40 CFR 51.100(s))	98.4 %
Consumer products (40 CFR 59, Subpt. C)	Not regulated

State

Consumer products	This product is regulated as a Penetrant. This product is compliant for use in all 50 states.
VOC content (CA)	23.6 %
VOC content (OTC)	23.6 %

International Inventories

Country(s) or region	Inventory name	On inventory (yes/no)*
Australia	Australian Inventory of Chemical Substances (AICS)	No
Canada	Domestic Substances List (DSL)	Yes
Canada	Non-Domestic Substances List (NDSL)	No
China	Inventory of Existing Chemical Substances in China (IECSC)	No
Europe	European Inventory of Existing Commercial Chemical Substances (EINECS)	No
Europe	European List of Notified Chemical Substances (ELINCS)	No
Japan	Inventory of Existing and New Chemical Substances (ENCS)	No
Korea	Existing Chemicals List (ECL)	No
New Zealand	New Zealand Inventory	No
Philippines	Philippine Inventory of Chemicals and Chemical Substances (PICCS)	No
United States & Puerto Rico	Toxic Substances Control Act (TSCA) Inventory	Yes

*A "Yes" indicates that all components of this product comply with the inventory requirements administered by the governing country(s)
A "No" indicates that one or more components of the product are not listed or exempt from listing on the inventory administered by the governing country(s).

16. Other information, including date of preparation or last revision

Issue date	11-19-2013
Revision date	08-17-2017
Prepared by	Allison Yoon

Version #	04
Further information	CRC # 548A/1002565
HMIS® ratings	Health: 1 Flammability: 1 Physical hazard: 0 Personal protection: B
NFPA ratings	Health: 1 Flammability: 1 Instability: 0
NFPA ratings	
Disclaimer	The information contained in this document applies to this specific material as supplied. It may not be valid for this material if it is used in combination with any other materials. This information is accurate to the best of CRC's knowledge or obtained from sources believed by CRC to be accurate. Before using any product, read all warnings and directions on the label. For further clarification of any information contained on this (M)SDS consult your supervisor, a health & safety professional, or CRC Industries, Inc..
Revision Information	Product and Company Identification: Product Codes Hazard(s) identification: Prevention Hazard(s) identification: Response Hazard(s) identification: Supplemental label information Composition/information on ingredients: Component information Handling and storage: Precautions for safe handling Physical & Chemical Properties: Multiple Properties Toxicological Information: Toxicological Data Ecological Information: Ecotoxicity Transport Information: Material Transportation Information Transport information: General information Other information, including date of preparation or last revision: Disclaimer Other information, including date of preparation or last revision: Further information GHS: Classification

Material Safety Data Sheet

Revision Number: 004.1

Issue date: 12/14/2009

1. PRODUCT AND COMPANY IDENTIFICATION

Product name: Loctite Pro Bottle Epoxy- Resin
Product type: Epoxy resin

Item number: 1365736
Region: United States

Company address:
Henkel Corporation
One Henkel Way
Rocky Hill, CT 06067

Contact information:
Telephone: 800.624.7767
Emergency telephone: 800.424.9300

2. HAZARDS IDENTIFICATION

EMERGENCY OVERVIEW

HMIS:

Physical state:	Liquid	**HEALTH:**	2
Color:	Translucent, Clear	**FLAMMABILITY:**	1
Odor:	None	**PHYSICAL HAZARD:**	0
		Personal Protection:	See MSDS Section 8

WARNING: MAY CAUSE ALLERGIC SKIN REACTION.
MAY CAUSE EYE, SKIN AND RESPIRATORY TRACT IRRITATION.

Relevant routes of exposure: Skin, Inhalation, Eyes

Potential Health Effects

Inhalation: Mild respiratory tract irritation.
Skin contact: Allergic skin reaction. Moderate skin irritation. Itching. Redness.
Eye contact: Moderate eye irritation. Redness.
Ingestion: Not expected under normal conditions of use.

Existing conditions aggravated by exposure: Skin disorders. Skin allergies.

This material is considered hazardous by the OSHA Hazard Communication Standard (29 CFR 1910.1200).

See Section 11 for additional toxicological information.

3. COMPOSITION / INFORMATION ON INGREDIENTS

Hazardous components	CAS NUMBER	%
Epichlorohydrin-4,4'-isopropylidene diphenol resin	25068-38-6	60 - 100

4. FIRST AID MEASURES

Inhalation: Move to fresh air. If symptoms develop and persist, get medical attention.

Skin contact: Immediately flush skin with plenty of water (using soap, if available). Remove contaminated clothing and footwear. If symptoms develop and persist, get medical attention.

Eye contact: Immediately flush eyes with plenty of water for at least 15 minutes. Get medical attention.

Ingestion: Keep individual calm. DO NOT induce vomiting unless directed to do so by medical personnel. If symptoms develop and persist, get medical attention.

5. FIRE FIGHTING MEASURES

Flash point: > 249 °C (> 480.2 °F) Pensky Martens closed cup

Autoignition temperature: Not available

Flammable/Explosive limits - lower: Not available

Flammable/Explosive limits - upper: Not available

Extinguishing media: Foam, dry chemical or carbon dioxide.

Special firefighting procedures: Wear self-contained breathing apparatus and full protective clothing, such as turn-out gear.

Unusual fire or explosion hazards: In case of fire, keep containers cool with water spray. Closed containers may rupture (due to build up of pressure) when exposed to extreme heat.

Hazardous combustion products: Oxides of carbon. Irritating organic fragments.

6. ACCIDENTAL RELEASE MEASURES

Use personal protection recommended in Section 8, isolate the hazard area and deny entry to unnecessary and unprotected personnel.

Environmental precautions: Do not allow product to enter sewer or waterways.

Clean-up methods: Remove all sources of ignition. Immediately contact emergency personnel. Scrape up as much material as poss ble. Clean residue with soap and water. Store in a partly filled, closed container until disposal.

7. HANDLING AND STORAGE

Handling: Do not breathe gas/fumes/vapor/spray. Avoid contact with eyes, skin and clothing. Wash thoroughly after handling. Keep container closed.

Storage: Store in original container until ready to use. Keep in a cool, well ventilated area away from heat, sparks and open flame. Keep container tightly closed until ready for use.

8. EXPOSURE CONTROLS / PERSONAL PROTECTION

Employers should complete an assessment of all workplaces to determine the need for, and selection of, proper exposure controls and protective equipment for each task performed.

Hazardous components	ACGIH TLV	OSHA PEL	AIHA WEEL	OTHER
Epichlorohydrin-4,4'-isopropylidene diphenol resin	None	None	None	None

Engineering controls: Provide adequate local exhaust ventilation to maintain worker exposure below exposure limits.

Respiratory protection: Use a NIOSH approved air-purifying respirator if the potential to exceed established exposure limits exists.

Eye/face protection: Safety goggles or safety glasses with side shields.

Skin protection: Chemical resistant, impermeable gloves.

9. PHYSICAL AND CHEMICAL PROPERTIES

Physical state: Liquid
Color: Translucent, Clear

Odor:	None
Odor threshold:	Not available
pH:	Not applicable
Vapor pressure:	0.03 mm Hg
Boiling point/range:	> 260.2 °C (> 500.4 °F)
Melting point/ range:	Not available
Specific gravity:	1.17
Vapor density:	Not available
Flash point:	> 249 °C (> 480.2 °F) Pensky Martens closed cup
Flammable/Explosive limits - lower:	Not available
Flammable/Explosive limits - upper:	Not available
Autoignition temperature:	Not available
Evaporation rate:	Not available
Solubility in water:	Slight
Partition coefficient (n-octanol/water):	Not available
VOC content:	0.1 % (value for resin and hardener together)

10. STABILITY AND REACTIVITY

Stability:	Stable
Hazardous reactions:	Will not occur.
Hazardous decomposition products:	None
Incompatible materials:	Strong oxidizing agents. Strong bases. Strong acids. Amines.
Conditions to avoid:	Excessive heat. Store away from incompatible materials.

11. TOXICOLOGICAL INFORMATION

Hazardous components	NTP Carcinogen	IARC Carcinogen	OSHA Carcinogen (Specifically Regulated)
Epichlorohydrin-4,4'-isopropylidene diphenol resin	No	No	No

Hazardous components	Health Effects/Target Organs
Epichlorohydrin-4,4'-isopropylidene diphenol resin	Allergen, Irritant

12. ECOLOGICAL INFORMATION

Ecological information: Not available

13. DISPOSAL CONSIDERATIONS

Information provided is for unused product only.

Recommended method of disposal:	Follow all local, state, federal and provincial regulations for disposal.
Hazardous waste number:	Not a RCRA hazardous waste.

14. TRANSPORT INFORMATION

U.S. Department of Transportation Ground (49 CFR)

Proper shipping name:	Not regulated
Hazard class or division:	None
Identification number:	None
Packing group:	None

International Air Transportation (ICAO/IATA)

Proper shipping name:	Not regulated
Hazard class or division:	None
Identification number:	None
Packing group:	None

Water Transportation (IMO/IMDG)

Proper shipping name:	ENVIRONMENTALLY HAZARDOUS SUBSTANCE, LIQUID, N.O.S. (Bisphenol-A Epichlorhydrine resin)
Hazard class or division:	9
Identification number:	UN 3082
Packing group:	III

15. REGULATORY INFORMATION

United States Regulatory Information

TSCA 8 (b) Inventory Status:	All components are listed or are exempt from listing on the Toxic Substances Control Act Inventory.
TSCA 12(b) Export Notification:	None above reporting de minimus
CERCLA/SARA Section 302 EHS:	None above reporting de minimus
CERCLA/SARA Section 311/312:	Immediate Health
CERCLA/SARA 313:	None above reporting de minimus
California Proposition 65:	No California Proposition 65 listed chemicals are known to be present.

Canada Regulatory Information

CEPA DSL/NDSL Status:	All components are listed on or are exempt from listing on the Canadian Domestic Substances List.
WHMIS hazard class:	D.2.B

16. OTHER INFORMATION

This material safety data sheet contains changes from the previous version in sections: New Material Safety Data Sheet format.

Prepared by: Regulatory Affairs

DISCLAIMER: The data contained herein are furnished for information only and are believed to be reliable. However, Henkel Corporation does not assume responsibility for any results obtained by persons over whose methods Henkel Corporation has no control. It is the user's responsibility to determine the suitability of Henkel's products or any production methods mentioned herein for a particular purpose, and to adopt such precautions as may be advisable for the protection of property and persons against any hazards that may be involved in the handling and use of any of Henkel Corporation's products. In light of the foregoing, Henkel Corporation specifically disclaims all warranties, express or implied, including warranties of merchantability and fitness for a particular purpose, arising from sale or use of Henkel Corporation's products. Henkel Corporation further disclaims any liability for consequential or incidental damages of any kind, including lost profits.

Revision Number: 001.1

Issue date: 12/14/2009

1. PRODUCT AND COMPANY IDENTIFICATION

Product name: Loctite Pro Bottle Epoxy-Hardener
Product type: Epoxy Hardener

Item number: 1365736
Region: United States

Company address:
Henkel Corporation
One Henkel Way
Rocky Hill, CT 06067

Contact information:
Telephone: 800.624.7767
Emergency telephone: 800.424.9300

2. HAZARDS IDENTIFICATION

EMERGENCY OVERVIEW

HMIS:

Physical state: Liquid
Color: Amber, Translucent
Odor: Amine, Mercaptan

HEALTH: *3
FLAMMABILITY: 1
PHYSICAL HAZARD: 0
Personal Protection: See MSDS Section 8

DANGER: CAUSES EYE, SKIN AND RESPIRATORY TRACT BURNS.
MAY CAUSE ALLERGIC SKIN REACTION.
HARMFUL IF SWALLOWED OR ABSORBED THROUGH SKIN.

Relevant routes of exposure: Skin, Inhalation, Eyes, Ingestion

Potential Health Effects

Inhalation: Respiratory tract burns. May cause respiratory tract irritation. May cause irritation to nose and throat. Lung damage.

Skin contact: May cause skin burns. May cause allergic skin reaction. May be harmful if absorbed through skin. Rash. Redness. Tissue damage.

Eye contact: Burns. Severe eye irritation. Redness. Tissue damage.

Ingestion: May be harmful if swallowed. May cause burns of mouth and throat if swallowed.

Existing conditions aggravated by exposure: Eye, skin, and respiratory disorders. Skin allergies. Asthma.

This material is considered hazardous by the OSHA Hazard Communication Standard (29 CFR 1910.1200).

See Section 11 for additional toxicological information.

3. COMPOSITION / INFORMATION ON INGREDIENTS

Hazardous components	CAS NUMBER	%
Poly[oxy(methyl-1,2-ethanediyl)], a-hydro-w-hydroxy-, ether with 2,2-bis(hydroxymethyl)-1,3-propanediol (4:1), 2-hydroxy-3-mercaptop	72244-98-5	60 - 100
m-Phenylenebis(methylamine)	1477-55-0	10 - 30
2,4,6-Tris(dimethylaminomethyl)phenol	90-72-2	5 - 10
Phenol	108-95-2	1 - 5

4. FIRST AID MEASURES

Inhalation: Move to fresh air. If not breathing, give artificial respiration. If breathing is difficult, give oxygen. Get medical attention.

Skin contact:	Immediately flush skin with plenty of water (using soap, if available). Remove contaminated clothing and footwear. Wash clothing before reuse. Thoroughly clean shoes before reuse. If symptoms develop and persist, get medical attention.
Eye contact:	Immediately flush eyes with plenty of water for at least 15 minutes. Get medical attention.
Ingestion:	DO NOT induce vomiting unless directed to do so by medical personnel. Never give anything by mouth to an unconscious person. Keep individual calm. Get medical attention.

5. FIRE FIGHTING MEASURES

Flash point:	> 93 °C (> 199.4 °F) Tagliabue closed cup
Autoignition temperature:	Not available
Flammable/Explosive limits - lower:	Not available
Flammable/Explosive limits - upper:	Not available
Extinguishing media:	Water spray (fog), foam, dry chemical or carbon dioxide.
Special firefighting procedures:	Wear self-contained breathing apparatus and full protective clothing, such as turn-out gear.
Unusual fire or explosion hazards:	In case of fire, keep containers cool with water spray.
Hazardous combustion products:	Oxides of carbon. Oxides of nitrogen. Ammonia. Amines. Nitric acid. Nitrosamines Irritating organic fragments.

6. ACCIDENTAL RELEASE MEASURES

Use personal protection recommended in Section 8, isolate the hazard area and deny entry to unnecessary and unprotected personnel.

Environmental precautions:	Do not allow product to enter sewer or waterways.
Clean-up methods:	Remove all sources of ignition. Immediately contact emergency personnel. Scrape up as much material as poss ble. Clean residue with soap and water. Store in a closed container until ready for disposal.

7. HANDLING AND STORAGE

Handling:	Keep away from heat, spark and flame. Do not breathe gas/fumes/vapor/spray. Keep container closed. Avoid contact with eyes, skin and clothing. Wash thoroughly after handling.
Storage:	Store in original container until ready to use. Keep in a cool, well ventilated area away from heat, sparks and open flame. Keep container tightly closed until ready for use.

8. EXPOSURE CONTROLS / PERSONAL PROTECTION

Employers should complete an assessment of all workplaces to determine the need for, and selection of, proper exposure controls and protective equipment for each task performed.

Hazardous components	ACGIH TLV	OSHA PEL	AIHA WEEL	OTHER
Poly[oxy(methyl-1,2-ethanediyl)], a-hydro-w-hydroxy-, ether with 2,2-bis(hydroxymethyl)-1,3-propanediol (4:1), 2-hydroxy-3-mercaptop	None	None	None	None
m-Phenylenebis(methylamine)	0.1 mg/m3 Ceiling (SKIN)	None	None	None
2,4,6-Tris(dimethylaminomethyl)phenol	None	None	None	None
Phenol	5 ppm TWA (SKIN)	5 ppm (19 mg/m3) TWA (SKIN)	None	None

Engineering controls: Use local exhaust ventilation if the potential for airborne exposure exists.

Respiratory protection: Use NIOSH approved respirator if there is potential to exceed exposure limit(s).

Eye/face protection: Safety goggles or safety glasses with side shields.

Skin protection: Chemical resistant, impermeable gloves.

9. PHYSICAL AND CHEMICAL PROPERTIES

Physical state: Liquid
Color: Amber, Translucent
Odor: Amine, Mercaptan
Odor threshold: Not available
pH: Not available
Vapor pressure: Not available
Boiling point/range: Not available
Melting point/ range: Not available
Specific gravity: 1.04
Vapor density: Not available
Flash point: > 93 °C (> 199.4 °F) Tagliabue closed cup
Flammable/Explosive limits - lower: Not available
Flammable/Explosive limits - upper: Not available
Autoignition temperature: Not available
Evaporation rate: Not available
Solubility in water: Insoluble
Partition coefficient (n-octanol/water): Not available
VOC content: 3.77 %; 0.38 g/l EPA Method 24

10. STABILITY AND REACTIVITY

Stability: Stable

Hazardous reactions: Will not occur.

Hazardous decomposition products: Oxides of carbon. Oxides of nitrogen. Ammonia. Amines. Nitric acid. Nitrosamines. Irritating organic fragments.

Incompatible materials: Strong acids. Strong oxidizing agents. Halogenated compounds. Strong mineral acids. Reactive metals. Calcium hypochlorite. Sodium hypochlorite. Nitrous acid and other nitrosating agents.

Conditions to avoid: Excessive heat. Store away from incompatible materials.

11. TOXICOLOGICAL INFORMATION

Hazardous components	NTP Carcinogen	IARC Carcinogen	OSHA Carcinogen (Specifically Regulated)
Poly[oxy(methyl-1,2-ethanediyl)], a-hydro-w-hydroxy-, ether with 2,2-bis(hydroxymethyl)-1,3-propanediol (4:1), 2-hydroxy-3-mercaptop	No	No	No
m-Phenylenebis(methylamine)	No	No	No
2,4,6-Tris(dimethylaminomethyl)phenol	No	No	No
Phenol	No	No	No

Hazardous components	Health Effects/Target Organs
Poly[oxy(methyl-1,2-ethanediyl)], a-hydro-w-hydroxy-, ether with 2,2-bis(hydroxymethyl)-1,3-propanediol (4:1), 2-hydroxy-3-mercaptop	No Data
m-Phenylenebis(methylamine)	Irritant, Liver, Kidney, Corrosive
2,4,6-Tris(dimethylaminomethyl)phenol	Irritant, Allergen
Phenol	Blood, Cardiac, Corrosive, Developmental, Eyes, Irritant, Kidney, Liver, Mutagen, Nervous System, Skin, Vascular

12. ECOLOGICAL INFORMATION

Ecological information: Not available

13. DISPOSAL CONSIDERATIONS

Information provided is for unused product only.

Recommended method of disposal: Follow all local, state, federal and provincial regulations for disposal.

Hazardous waste number: Not a RCRA hazardous waste.

14. TRANSPORT INFORMATION

The shipping classifications in this sections are for non-bulk packaging only (unless otherwise specified). Shipping classification may be different for bu k packaging.

U.S. Department of Transportation Ground (49 CFR)

Proper shipping name: Amines, liquid, corrosive, n.o.s. (aliphatic Amine)
Hazard class or division: 8
Identification number: UN 2735
Packing group: II

International Air Transportation (ICAO/IATA)

Proper shipping name: Amines, liquid, corrosive, n.o.s. (aliphatic Amine)
Hazard class or division: 8
Identification number: UN 2735
Packing group: II

Water Transportation (IMO/IMDG)

Proper shipping name: AMINES, LIQUID, CORROSIVE, N.O.S. (aliphatic Amine)
Hazard class or division: 8
Identification number: UN 2735
Packing group: II

15. REGULATORY INFORMATION

United States Regulatory Information

TSCA 8 (b) Inventory Status: All components are listed or are exempt from listing on the Toxic Substances Control Act Inventory.

TSCA 12(b) Export Notification:	None above reporting de minimus
CERCLA/SARA Section 302 EHS:	Phenol (CAS# 108-95-2).
CERCLA/SARA Section 311/312:	Immediate Health, Delayed Health
CERCLA/SARA 313:	This product contains the following toxic chemicals subject to the reporting requirements of section 313 of the Emergency Planning and Community Right-To-Know Act of 1986 (40 CFR 372). Phenol (CAS# 108-95-2).
California Proposition 65:	No California Proposition 65 listed chemicals are known to be present.

Canada Regulatory Information

CEPA DSL/NDSL Status:	All components are listed on or are exempt from listing on the Canadian Domestic Substances List.
WHMIS hazard class:	D.2.A, D.2.B, E

16. OTHER INFORMATION

This material safety data sheet contains changes from the previous version in sections: First issue.

Prepared by: Regulatory Affairs

DISCLAIMER: The data contained herein are furnished for information only and are believed to be reliable. However, Henkel Corporation does not assume responsibility for any results obtained by persons over whose methods Henkel Corporation has no control. It is the user's responsibility to determine the suitability of Henkel's products or any production methods mentioned herein for a particular purpose, and to adopt such precautions as may be advisable for the protection of property and persons against any hazards that may be involved in the handling and use of any of Henkel Corporation's products. In light of the foregoing, Henkel Corporation specifically disclaims all warranties, express or implied, including warranties of merchantability and fitness for a particular purpose, arising from sale or use of Henkel Corporation's products. Henkel Corporation further disclaims any liability for consequential or incidental damages of any kind, including lost profits.

Revision Number: 002.2

Issue date: 02/17/2011

1. PRODUCT AND COMPANY IDENTIFICATION

Product name: LOCTITE® Thread Sealant With PTFE®
Product type: Sealant

IDH number: 1527514
Item number: 1527514
Region: United States

Company address:
Henkel Corporation
One Henkel Way
Rocky Hill, Connecticut 06067

Contact information:
Telephone: 860.571.5100
MEDICAL EMERGENCY Phone: Poison Control Center
1-877-671-4608 (toll free) or 1-303-592-1711
TRANSPORT EMERGENCY Phone: CHEMTREC
1-800-424-9300 (toll free) or 1-703-527-3887
Internet: www.henkelna.com

2. HAZARDS IDENTIFICATION

EMERGENCY OVERVIEW

Physical state: Paste
Color: White
Odor: Alcoholic

HMIS:
HEALTH: *2
FLAMMABILITY: 3
PHYSICAL HAZARD: 0
Personal Protection: See MSDS Section 8

WARNING: FLAMMABLE LIQUID AND VAPOR.
MAY CAUSE EYE, SKIN AND RESPIRATORY TRACT IRRITATION.
MAY BE HARMFUL IF SWALLOWED OR INHALED.

Relevant routes of exposure: Skin, Inhalation, Eyes, Ingestion

Potential Health Effects

Inhalation: May be harmful if inhaled. Vapors may cause headaches, nausea, dizziness and respiratory tract irritation.

Skin contact: May cause skin irritation. Symptoms may include redness, edema, drying, defatting and cracking of the skin.

Eye contact: May cause mild irritation Symptoms may include stinging, tearing, redness, swelling, and blurred vision.

Ingestion: May be harmful if swallowed. Ingestion can cause gastrointestinal irritation, nausea, vomiting and diarrhea.

Existing conditions aggravated by exposure: Eye, skin, and respiratory disorders.

This material is considered hazardous by the OSHA Hazard Communication Standard (29 CFR 1910.1200).

See Section 11 for additional toxicological information.

3. COMPOSITION / INFORMATION ON INGREDIENTS

Hazardous components	CAS NUMBER	%
2-Propanol	67-63-0	30 - 60
Talc	14807-96-6	10 - 30
Castor oil	8001-79-4	10 - 30
Polyvinyl butyral - polyvinyl alcohol - polyvinyl acetate terpolymer	27360-07-2	10 - 30
Titanium dioxide	13463-67-7	1 - 5
Ethene, tetrafluoro-, homopolymer	9002-84-0	1 - 5
Quartz (SiO2)	14808-60-7	0.1 - 1

4. FIRST AID MEASURES

Inhalation: Move to fresh air. If symptoms persist, seek medical advice.

Skin contact: Wash with soap and water.

Eye contact: Immediately flush eyes with plenty of water for at least 15 minutes. Get medical attention.

Ingestion: Do not induce vomiting. Keep individual calm. Get medical attention.

5. FIRE FIGHTING MEASURES

Flash point: 23 °C (73.4 °F) Tagliabue closed cup

Autoignition temperature: 398.3 °C (748.94 °F) Estimated

Flammable/Explosive limits - lower: 2.3 %

Flammable/Explosive limits - upper: 12.7 %

Extinguishing media: Water spray (fog), foam, dry chemical or carbon dioxide.

Special firefighting procedures: Wear self-contained breathing apparatus and full protective clothing, such as turn-out gear.

Unusual fire or explosion hazards: None

Hazardous combustion products: Oxides of carbon. Toxic fluorides.

6. ACCIDENTAL RELEASE MEASURES

Use personal protection recommended in Section 8, isolate the hazard area and deny entry to unnecessary and unprotected personnel.

Environmental precautions: Ventilate area. Remove all sources of ignition.

Clean-up methods: Remove all sources of ignition. Ventilate area. Soak up with inert absorbent material (e.g. sand, silica gel, acid binder, universal binder, sawdust). Store in a partly filled, closed container until disposal.

7. HANDLING AND STORAGE

Handling: Do not get in eyes. Keep away from heat, spark and flame.

Storage: Store away from heat, sparks, flames, or other sources of ignition.

For information on product shelf life contact Henkel Customer Service at (800) 243-4874.

8. EXPOSURE CONTROLS / PERSONAL PROTECTION

Employers should complete an assessment of all workplaces to determine the need for, and selection of, proper exposure controls and protective equipment for each task performed.

Hazardous components	ACGIH TLV	OSHA PEL	AIHA WEEL	OTHER
2-Propanol	200 ppm TWA 400 ppm STEL	400 ppm (980 mg/m3) TWA	None	None
Talc	2 mg/m3 TWA Respirable fraction.	20 MPPCF TWA 2.4 MPPCF TWA Respirable. 0.1 mg/m3 TWA Respirable. 0.3 mg/m3 TWA Total dust.	None	50 ppm
Castor oil	None	None	None	None
Polyvinyl butyral - polyvinyl alcohol - polyvinyl acetate terpolymer	None	None	None	None
Titanium dioxide	10 mg/m3 TWA	15 mg/m3 TWA Total dust.	None	None
Ethene, tetrafluoro-, homopolymer	None	None	None	10 mg/m3 TWA Total dust. 5 mg/m3 TWA Respirable fraction.
Quartz (SiO2)	0.025 mg/m3 TWA Respirable fraction.	2.4 MPPCF TWA Respirable. 0.1 mg/m3 TWA Respirable. 0.3 mg/m3 TWA Total dust.	None	None

Engineering controls: Provide adequate local exhaust ventilation to maintain worker exposure below exposure limits.

Respiratory protection: Use NIOSH approved respirator if there is potential to exceed exposure limit(s).

Eye/face protection: Safety goggles or safety glasses with side shields.

Skin protection: Chemical resistant, impermeable gloves.

9. PHYSICAL AND CHEMICAL PROPERTIES

Physical state: Paste
Color: White
Odor: Alcoholic
Odor threshold: Not available
pH: Not applicable
Vapor pressure: 33 mm hg (20 °C (68°F))
Boiling point/range: 82 °C (179.6 °F)
Melting point/ range: Not determined
Specific gravity: 1.12 at 25 °C (77°F)
Vapor density: 2.07
Flash point: 23 °C (73.4 °F) Tagliabue closed cup
Flammable/Explosive limits - lower: 2.3 %
Flammable/Explosive limits - upper: 12.7 %
Autoignition temperature: 398.3 °C (748.94 °F) Estimated
Evaporation rate: 7.7 (Ether = 1)
Solubility in water: partially soluble
Partition coefficient (n-octanol/water): Not determined
VOC content: 35.98 %; 343.43 g/l

10. STABILITY AND REACTIVITY

Stability: Stable

Hazardous reactions: Will not occur.

Hazardous decomposition products: Toxic fluorides. Oxides of carbon.

Incompatible materials: Oxidizing agents. Acids. Aldehydes. Amines.

Conditions to avoid: Heat, flames, sparks and other sources of ignition.

11. TOXICOLOGICAL INFORMATION

Hazardous components	NTP Carcinogen	IARC Carcinogen	OSHA Carcinogen (Specifically Regulated)
2-Propanol	No	No	No
Talc	No	No	No
Castor oil	No	No	No
Polyvinyl butyral - polyvinyl alcohol - polyvinyl acetate terpolymer	No	No	No
Titanium dioxide	No	Group 2B	No
Ethene, tetrafluoro-, homopolymer	No	No	No
Quartz (SiO2)	Known carcinogen.	Group 1	No

Hazardous components	Health Effects/Target Organs
2-Propanol	Allergen, Blood, Brain, Central nervous system, Irritant, Kidney, Liver, Spleen
Talc	Irritant, Lung, Some evidence of carcinogenicity
Castor oil	Irritant
Polyvinyl butyral - polyvinyl alcohol - polyvinyl acetate terpolymer	No Records
Titanium dioxide	Irritant, Respiratory, Some evidence of carcinogenicity
Ethene, tetrafluoro-, homopolymer	No Target Organs
Quartz (SiO2)	Immune system, Lung, Some evidence of carcinogenicity

12. ECOLOGICAL INFORMATION

Ecological information: Not available

13. DISPOSAL CONSIDERATIONS

Information provided is for unused product only.

Recommended method of disposal: Follow all local, state, federal and provincial regulations for disposal.

Hazardous waste number: D001: Ignitable.

14. TRANSPORT INFORMATION

U.S. Department of Transportation Ground (49 CFR)

Proper shipping name: Resin solution
Hazard class or division: 3
Identification number: UN 1866
Packing group: III
Exceptions: (Not more than 5 L), ORM-D, Consumer Commodity

International Air Transportation (ICAO/IATA)

Proper shipping name: Resin solution
Hazard class or division: 3
Identification number: UN 1866
Packing group: III
Exceptions: Consumer Commodity, ID 8000, Class 9, (Not more than 500 ml)

Water Transportation (IMO/IMDG)

Proper shipping name:	RESIN SOLUTION
Hazard class or division:	3
Identification number:	UN 1866
Packing group:	III

15. REGULATORY INFORMATION

United States Regulatory Information

TSCA 8 (b) Inventory Status:	All components are listed or are exempt from listing on the Toxic Substances Control Act Inventory.
TSCA 12(b) Export Notification:	None above reporting de minimus
CERCLA/SARA Section 302 EHS:	None above reporting de minimus
CERCLA/SARA Section 311/312:	Immediate Health, Delayed Health, Fire
CERCLA/SARA 313:	None above reporting de minimus
CERCLA Reportable quantity:	2-Propanol (CAS# 67-63-0) 100 lbs. (45.4 kg)
California Proposition 65:	This product contains a chemical known in the State of California to cause cancer. This product contains a chemical known to the State of California to cause birth defects or other reproductive harm.

Canada Regulatory Information

CEPA DSL/NDSL Status:	All components are listed on or are exempt from listing on the Canadian Domestic Substances List.
WHMIS hazard class:	B.2, D.2.A, D.2.B

16. OTHER INFORMATION

This material safety data sheet contains changes from the previous version in sections: New Material Safety Data Sheet format.

Prepared by: Kyra Kozak Woods, Manager, Regulatory Affairs

DISCLAIMER: The data contained herein are furnished for information only and are believed to be reliable. However, Henkel Corporation does not assume responsibility for any results obtained by persons over whose methods Henkel Corporation has no control. It is the user's responsibility to determine the suitability of Henkel's products or any production methods mentioned herein for a particular purpose, and to adopt such precautions as may be advisable for the protection of property and persons against any hazards that may be involved in the handling and use of any of Henkel Corporation's products. In light of the foregoing, Henkel Corporation specifically disclaims all warranties, express or implied, including warranties of merchantability and fitness for a particular purpose, arising from sale or use of Henkel Corporation's products. Henkel Corporation further disclaims any liability for consequential or incidental damages of any kind, including lost profits.

SAFETY DATA SHEET

1017565B

Section 1. Identification

Product name : ACE® Upside-Down Marking Paint (Solvent Based)
APWA Alert Orange

Product code : 1017565B

Other means of identification : Not available.

Product type : Aerosol.

Relevant identified uses of the substance or mixture and uses advised against

Not applicable.

Manufacturer : Mfd. for:
ACE HARDWARE COPORATION
Oak Brook, IL 60521

Emergency telephone number of the company : (216) 566-2917

Product Information Telephone Number : Not available.

Regulatory Information Telephone Number : (216) 566-2902

Transportation Emergency Telephone Number : (800) 424-9300

Section 2. Hazards identification

OSHA/HCS status : This material is considered hazardous by the OSHA Hazard Communication Standard (29 CFR 1910.1200).

Classification of the substance or mixture : FLAMMABLE AEROSOLS - Category 1
GASES UNDER PRESSURE - Compressed gas
SERIOUS EYE DAMAGE/ EYE IRRITATION - Category 2A
CARCINOGENICITY - Category 2
SPECIFIC TARGET ORGAN TOXICITY (SINGLE EXPOSURE) (Respiratory tract irritation and Narcotic effects) - Category 3
SPECIFIC TARGET ORGAN TOXICITY (REPEATED EXPOSURE) - Category 2
ASPIRATION HAZARD - Category 1

Percentage of the mixture consisting of ingredient(s) of unknown toxicity: 51.9%

GHS label elements

Hazard pictograms :



Signal word : Danger

Hazard statements : Extremely flammable aerosol.
Contains gas under pressure; may explode if heated.
Causes serious eye irritation.
Suspected of causing cancer.
May be fatal if swallowed and enters airways.
May cause respiratory irritation.
May cause drowsiness and dizziness.
May cause damage to organs through prolonged or repeated exposure.

Section 2. Hazards identification

Precautionary statements

General : Read label before use. Keep out of reach of children. If medical advice is needed, have product container or label at hand.

Prevention : Obtain special instructions before use. Do not handle until all safety precautions have been read and understood. Use personal protective equipment as required. Wear eye or face protection. Keep away from heat, hot surfaces, sparks, open flames and other ignition sources. No smoking. Pressurized container: Do not pierce or burn, even after use. Do not spray on an open flame or other ignition source. Use only outdoors or in a well-ventilated area. Do not breathe dust or mist. Wash hands thoroughly after handling.

Response : Get medical attention if you feel unwell. IF exposed or concerned: Get medical attention. IF INHALED: Remove victim to fresh air and keep at rest in a position comfortable for breathing. Call a POISON CENTER or physician if you feel unwell. IF SWALLOWED: Immediately call a POISON CENTER or physician. Do NOT induce vomiting. IF IN EYES: Rinse cautiously with water for several minutes. Remove contact lenses, if present and easy to do. Continue rinsing. If eye irritation persists: Get medical attention.

Storage : Store locked up. Protect from sunlight. Do not expose to temperatures exceeding 50 °C/122 °F. Store in a well-ventilated place.

Disposal Dispose of contents and container in accordance with all local, regional, national and international regulations.

Supplemental label elements Adequate ventilation required when sanding or abrading the dried film. If Adequate ventilation cannot be provided wear an approved particulate respirator (NIOSH approved). Follow respirator manufacturer's directions for respirator use. DELAYED EFFECTS FROM LONG TERM OVEREXPOSURE. Abrading or sanding of the dry film may release crystalline silica which has been shown to cause lung damage and cancer under long term exposure. DANGER: Rags, steel wool, other waste soaked with this product, and sanding residue may spontaneously catch fire if improperly discarded. Immediately place rags, steel wool, other waste soaked with this product, and sanding residue in a sealed, water-filled, metal container. Dispose of in accordance with local fire regulations. DELAYED EFFECTS FROM LONG TERM OVEREXPOSURE. Contains solvents which can cause permanent brain and nervous system damage. Intentional misuse by deliberately concentrating and inhaling the contents can be harmful or fatal. WARNING: This product contains chemicals known to the State of California to cause cancer and birth defects or other reproductive harm.

Please refer to the SDS for additional information. Keep upright in a cool, dry place. Do not discard empty can in trash compactor.

Hazards not otherwise classified : None known.

Section 3. Composition/information on ingredients

Substance/mixture : Mixture

Other means of identification : Not available.

CAS number/other identifiers

Ingredient name	% by weight	CAS number
Acetone	22.0	67-64-1
Propane	12.7	74-98-6
Butane	12.2	106-97-8
Xylene	9.7	1330-20-7
Lt. Aliphatic Hydrocarbon Solvent	6.6	64742-89-8
Ethylbenzene	1.7	100-41-4
Titanium Dioxide	1.2	13463-67-7

Section 3. Composition/information on ingredients

There are no additional ingredients present which, within the current knowledge of the supplier and in the concentrations applicable, are classified as hazardous to health or the environment and hence require reporting in this section.

Occupational exposure limits, if available, are listed in Section 8.

Section 4. First aid measures

Description of necessary first aid measures

Eye contact : Immediately flush eyes with plenty of water, occasionally lifting the upper and lower eyelids. Check for and remove any contact lenses. Continue to rinse for at least 10 minutes. Get medical attention.

Inhalation : Remove victim to fresh air and keep at rest in a position comfortable for breathing. If it is suspected that fumes are still present, the rescuer should wear an appropriate mask or self-contained breathing apparatus. If not breathing, if breathing is irregular or if respiratory arrest occurs, provide artificial respiration or oxygen by trained personnel. It may be dangerous to the person providing aid to give mouth-to-mouth resuscitation. Get medical attention. If necessary, call a poison center or physician. If unconscious, place in recovery position and get medical attention immediately. Maintain an open airway. Loosen tight clothing such as a collar, tie, belt or waistband.

Skin contact : Flush contaminated skin with plenty of water. Remove contaminated clothing and shoes. Continue to rinse for at least 10 minutes. Get medical attention. Wash clothing before reuse. Clean shoes thoroughly before reuse.

Ingestion : Get medical attention immediately. Call a poison center or physician. Wash out mouth with water. Remove dentures if any. Remove victim to fresh air and keep at rest in a position comfortable for breathing. If material has been swallowed and the exposed person is conscious, give small quantities of water to drink. Stop if the exposed person feels sick as vomiting may be dangerous. Aspiration hazard if swallowed. Can enter lungs and cause damage. Do not induce vomiting. If vomiting occurs, the head should be kept low so that vomit does not enter the lungs. Never give anything by mouth to an unconscious person. If unconscious, place in recovery position and get medical attention immediately. Maintain an open airway. Loosen tight clothing such as a collar, tie, belt or waistband.

Most important symptoms/effects, acute and delayed

Potential acute health effects

Eye contact : Causes serious eye irritation.

Inhalation : Can cause central nervous system (CNS) depression. May cause drowsiness and dizziness. May cause respiratory irritation.

Skin contact : No known significant effects or critical hazards.

Ingestion : Can cause central nervous system (CNS) depression. May be fatal if swallowed and enters airways. Irritating to mouth, throat and stomach.

Over-exposure signs/symptoms

Eye contact : Adverse symptoms may include the following:
pain or irritation
watering
redness

Inhalation : Adverse symptoms may include the following:
respiratory tract irritation
coughing
nausea or vomiting
headache
drowsiness/fatigue
dizziness/vertigo
unconsciousness

Skin contact : No specific data.

Section 4. First aid measures

Ingestion : Adverse symptoms may include the following:
nausea or vomiting

Indication of immediate medical attention and special treatment needed, if necessary

Notes to physician : Treat symptomatically. Contact poison treatment specialist immediately if large quantities have been ingested or inhaled.

Specific treatments : No specific treatment.

Protection of first-aiders : No action shall be taken involving any personal risk or without suitable training. If it is suspected that fumes are still present, the rescuer should wear an appropriate mask or self-contained breathing apparatus. It may be dangerous to the person providing aid to give mouth-to-mouth resuscitation.

See toxicological information (Section 11)

Section 5. Fire-fighting measures

Extinguishing media

Suitable extinguishing media : Use an extinguishing agent suitable for the surrounding fire.

Unsuitable extinguishing media : None known.

Specific hazards arising from the chemical : Extremely flammable aerosol. In a fire or if heated, a pressure increase will occur and the container may burst, with the risk of a subsequent explosion. Gas may accumulate in low or confined areas or travel a considerable distance to a source of ignition and flash back, causing fire or explosion. Bursting aerosol containers may be propelled from a fire at high speed. Runoff to sewer may create fire or explosion hazard.

Hazardous thermal decomposition products : Decomposition products may include the following materials:
carbon dioxide
carbon monoxide
metal oxide/oxides

Special protective actions for fire-fighters : Promptly isolate the scene by removing all persons from the vicinity of the incident if there is a fire. No action shall be taken involving any personal risk or without suitable training. Move containers from fire area if this can be done without risk. Use water spray to keep fire-exposed containers cool.

Special protective equipment for fire-fighters : Fire-fighters should wear appropriate protective equipment and self-contained breathing apparatus (SCBA) with a full face-piece operated in positive pressure mode.

Section 6. Accidental release measures

Personal precautions, protective equipment and emergency procedures

For non-emergency personnel : No action shall be taken involving any personal risk or without suitable training. Evacuate surrounding areas. Keep unnecessary and unprotected personnel from entering. In the case of aerosols being ruptured, care should be taken due to the rapid escape of the pressurized contents and propellant. If a large number of containers are ruptured, treat as a bulk material spillage according to the instructions in the clean-up section. Do not touch or walk through spilled material. Shut off all ignition sources. No flares, smoking or flames in hazard area. Avoid breathing vapor or mist. Provide adequate ventilation. Wear appropriate respirator when ventilation is inadequate. Put on appropriate personal protective equipment.

For emergency responders : If specialised clothing is required to deal with the spillage, take note of any information in Section 8 on suitable and unsuitable materials. See also the information in "For non-emergency personnel".

Environmental precautions :

Section 6. Accidental release measures

Avoid dispersal of spilled material and runoff and contact with soil, waterways, drains and sewers. Inform the relevant authorities if the product has caused environmental pollution (sewers, waterways, soil or air).

Methods and materials for containment and cleaning up

Small spill : Stop leak if without risk. Move containers from spill area. Use spark-proof tools and explosion-proof equipment. Dilute with water and mop up if water-soluble. Alternatively, or if water-insoluble, absorb with an inert dry material and place in an appropriate waste disposal container. Dispose of via a licensed waste disposal contractor.

Large spill : Stop leak if without risk. Move containers from spill area. Use spark-proof tools and explosion-proof equipment. Approach release from upwind. Prevent entry into sewers, water courses, basements or confined areas. Wash spillages into an effluent treatment plant or proceed as follows. Contain and collect spillage with non-combustible, absorbent material e.g. sand, earth, vermiculite or diatomaceous earth and place in container for disposal according to local regulations (see Section 13). Dispose of via a licensed waste disposal contractor. Contaminated absorbent material may pose the same hazard as the spilled product. Note: see Section 1 for emergency contact information and Section 13 for waste disposal.

Section 7. Handling and storage

Precautions for safe handling

Protective measures : Put on appropriate personal protective equipment (see Section 8). Pressurized container: protect from sunlight and do not expose to temperatures exceeding 50°C. Do not pierce or burn, even after use. Avoid exposure - obtain special instructions before use. Do not handle until all safety precautions have been read and understood. Do not get in eyes or on skin or clothing. Do not breathe vapor or mist. Do not swallow. Avoid breathing gas. Use only with adequate ventilation. Wear appropriate respirator when ventilation is inadequate. Store and use away from heat, sparks, open flame or any other ignition source. Use explosion-proof electrical (ventilating, lighting and material handling) equipment. Use only non-sparking tools. Empty containers retain product residue and can be hazardous.

Advice on general occupational hygiene : Eating, drinking and smoking should be prohibited in areas where this material is handled, stored and processed. Workers should wash hands and face before eating, drinking and smoking. Remove contaminated clothing and protective equipment before entering eating areas. See also Section 8 for additional information on hygiene measures.

Conditions for safe storage, including any incompatibilities : Store in accordance with local regulations. Store away from direct sunlight in a dry, cool and well-ventilated area, away from incompatible materials (see Section 10) and food and drink. Protect from sunlight. Store locked up. Eliminate all ignition sources. Use appropriate containment to avoid environmental contamination.

Section 8. Exposure controls/personal protection

Control parameters

Occupational exposure limits

Ingredient name	Exposure limits
Acetone	**ACGIH TLV (United States, 4/2014).** TWA: 500 ppm 8 hours. TWA: 1188 mg/m³ 8 hours. STEL: 750 ppm 15 minutes. STEL: 1782 mg/m³ 15 minutes. **NIOSH REL (United States, 10/2013).** TWA: 250 ppm 10 hours. TWA: 590 mg/m³ 10 hours. **OSHA PEL (United States, 2/2013).**

Section 8. Exposure controls/personal protection

	TWA: 1000 ppm 8 hours. TWA: 2400 mg/m³ 8 hours.
Propane	**NIOSH REL (United States, 10/2013).** TWA: 1000 ppm 10 hours. TWA: 1800 mg/m³ 10 hours. **OSHA PEL (United States, 2/2013).** TWA: 1000 ppm 8 hours. TWA: 1800 mg/m³ 8 hours.
Butane	**NIOSH REL (United States, 10/2013).** TWA: 800 ppm 10 hours. TWA: 1900 mg/m³ 10 hours. **ACGIH TLV (United States, 4/2014).** STEL: 1000 ppm 15 minutes.
Xylene	**ACGIH TLV (United States, 4/2014).** TWA: 100 ppm 8 hours. TWA: 434 mg/m³ 8 hours. STEL: 150 ppm 15 minutes. STEL: 651 mg/m³ 15 minutes. **OSHA PEL (United States, 2/2013).** TWA: 100 ppm 8 hours. TWA: 435 mg/m³ 8 hours.
Ethylbenzene	**ACGIH TLV (United States, 4/2014).** TWA: 20 ppm 8 hours. **NIOSH REL (United States, 10/2013).** TWA: 100 ppm 10 hours. TWA: 435 mg/m³ 10 hours. STEL: 125 ppm 15 minutes. STEL: 545 mg/m³ 15 minutes. **OSHA PEL (United States, 2/2013).** TWA: 100 ppm 8 hours. TWA: 435 mg/m³ 8 hours.
Titanium Dioxide	**ACGIH TLV (United States, 4/2014).** TWA: 10 mg/m³ 8 hours. **OSHA PEL (United States, 2/2013).** TWA: 15 mg/m³ 8 hours. Form: Total dust

Appropriate engineering controls : Use only with adequate ventilation. Use process enclosures, local exhaust ventilation or other engineering controls to keep worker exposure to airborne contaminants below any recommended or statutory limits. The engineering controls also need to keep gas, vapor or dust concentrations below any lower explosive limits. Use explosion-proof ventilation equipment.

Environmental exposure controls : Emissions from ventilation or work process equipment should be checked to ensure they comply with the requirements of environmental protection legislation. In some cases, fume scrubbers, filters or engineering modifications to the process equipment will be necessary to reduce emissions to acceptable levels.

Individual protection measures

Hygiene measures : Wash hands, forearms and face thoroughly after handling chemical products, before eating, smoking and using the lavatory and at the end of the working period. Appropriate techniques should be used to remove potentially contaminated clothing. Wash contaminated clothing before reusing. Ensure that eyewash stations and safety showers are close to the workstation location.

Eye/face protection : Safety eyewear complying with an approved standard should be used when a risk assessment indicates this is necessary to avoid exposure to liquid splashes, mists, gases or dusts. If contact is possible, the following protection should be worn, unless the assessment indicates a higher degree of protection: chemical splash goggles.

Skin protection

Section 8. Exposure controls/personal protection

Hand protection : Chemical-resistant, impervious gloves complying with an approved standard should be worn at all times when handling chemical products if a risk assessment indicates this is necessary. Considering the parameters specified by the glove manufacturer, check during use that the gloves are still retaining their protective properties. It should be noted that the time to breakthrough for any glove material may be different for different glove manufacturers. In the case of mixtures, consisting of several substances, the protection time of the gloves cannot be accurately estimated.

Body protection : Personal protective equipment for the body should be selected based on the task being performed and the risks involved and should be approved by a specialist before handling this product. When there is a risk of ignition from static electricity, wear anti-static protective clothing. For the greatest protection from static discharges, clothing should include anti-static overalls, boots and gloves.

Other skin protection : Appropriate footwear and any additional skin protection measures should be selected based on the task being performed and the risks involved and should be approved by a specialist before handling this product.

Respiratory protection : Use a properly fitted, air-purifying or air-fed respirator complying with an approved standard if a risk assessment indicates this is necessary. Respirator selection must be based on known or anticipated exposure levels, the hazards of the product and the safe working limits of the selected respirator.

Section 9. Physical and chemical properties

Appearance

Physical state : Liquid.

Color : Not available.

Odor : Not available.

Odor threshold : Not available.

pH : 7

Melting point : Not available.

Boiling point : Not available.

Flash point : Closed cup: -29°C (-20.2°F) [Pensky-Martens Closed Cup]

Evaporation rate : 5.6 (butyl acetate = 1)

Flammability (solid, gas) : Not available.

Lower and upper explosive (flammable) limits : Lower: 0.9%
Upper: 12.8%

Vapor pressure : 13.5 kPa (101.325 mm Hg) [at 20°C]

Vapor density : 1.55 [Air = 1]

Relative density : 0.87

Solubility : Not available.

Partition coefficient: n-octanol/water : Not available.

Auto-ignition temperature : Not available.

Decomposition temperature : Not available.

Viscosity : Kinematic (room temperature): <0.205 cm^2/s (<20.5 cSt)
Kinematic (40°C (104°F)): <0.205 cm^2/s (<20.5 cSt)

Aerosol product

Type of aerosol : Spray

Heat of combustion : 0.00002316 kJ/g

Section 10. Stability and reactivity

Reactivity : No specific test data related to reactivity available for this product or its ingredients.

Chemical stability : The product is stable.

Possibility of hazardous reactions : Under normal conditions of storage and use, hazardous reactions will not occur.

Conditions to avoid : Avoid all possible sources of ignition (spark or flame).

Incompatible materials : No specific data.

Hazardous decomposition products : Under normal conditions of storage and use, hazardous decomposition products should not be produced.

Section 11. Toxicological information

Information on toxicological effects

Acute toxicity

Product/ingredient name	Result	Species	Dose	Exposure
Acetone	LD50 Oral	Rat	5800 mg/kg	-
Butane	LC50 Inhalation Vapor	Rat	658000 mg/m³	4 hours
Xylene	LC50 Inhalation Gas.	Rat	5000 ppm	4 hours
	LD50 Oral	Rat	4300 mg/kg	-
Ethylbenzene	LD50 Dermal	Rabbit	>5000 mg/kg	-
	LD50 Oral	Rat	3500 mg/kg	-

Irritation/Corrosion

Product/ingredient name	Result	Species	Score	Exposure	Observation
Acetone	Eyes - Mild irritant	Human	-	186300 parts per million	-
	Eyes - Mild irritant	Rabbit	-	10 microliters	-
	Eyes - Moderate irritant	Rabbit	-	24 hours 20 milligrams	-
	Eyes - Severe irritant	Rabbit	-	20 milligrams	-
	Skin - Mild irritant	Rabbit	-	24 hours 500 milligrams	-
	Skin - Mild irritant	Rabbit	-	395 milligrams	-
Xylene	Eyes - Mild irritant	Rabbit	-	87 milligrams	-
	Eyes - Severe irritant	Rabbit	-	24 hours 5 milligrams	-
	Skin - Mild irritant	Rat	-	8 hours 60 microliters	-
	Skin - Moderate irritant	Rabbit	-	24 hours 500 milligrams	-
	Skin - Moderate irritant	Rabbit	-	100 Percent	-
Ethylbenzene	Eyes - Severe irritant	Rabbit	-	500 milligrams	-
	Skin - Mild irritant	Rabbit	-	24 hours 15 milligrams	-
Titanium Dioxide	Skin - Mild irritant	Human	-	72 hours 300 Micrograms Intermittent	-

Sensitization

Not available.

Section 11. Toxicological information

Mutagenicity

Not available.

Carcinogenicity

Not available.

Classification

Product/ingredient name	OSHA	IARC	NTP
Xylene	-	3	-
Ethylbenzene	-	2B	-
Titanium Dioxide	-	2B	-

Reproductive toxicity

Not available.

Teratogenicity

Not available.

Specific target organ toxicity (single exposure)

Name	Category	Route of exposure	Target organs
Acetone	Category 3	Not applicable.	Respiratory tract irritation and Narcotic effects
Propane	Category 3	Not applicable.	Respiratory tract irritation and Narcotic effects
Butane	Category 3	Not applicable.	Respiratory tract irritation and Narcotic effects
Xylene	Category 3	Not applicable.	Respiratory tract irritation and Narcotic effects
Lt. Aliphatic Hydrocarbon Solvent	Category 3	Not applicable.	Respiratory tract irritation and Narcotic effects
Ethylbenzene	Category 3	Not applicable.	Respiratory tract irritation and Narcotic effects

Specific target organ toxicity (repeated exposure)

Name	Category	Route of exposure	Target organs
Acetone	Category 2	Not determined	Not determined
Propane	Category 2	Not determined	Not determined
Butane	Category 2	Not determined	Not determined
Xylene	Category 2	Not determined	Not determined
Lt. Aliphatic Hydrocarbon Solvent	Category 2	Not determined	Not determined
Ethylbenzene	Category 2	Not determined	Not determined

Aspiration hazard

Name	Result
Propane	ASPIRATION HAZARD - Category 1
Butane	ASPIRATION HAZARD - Category 1
Xylene	ASPIRATION HAZARD - Category 1
Lt. Aliphatic Hydrocarbon Solvent	ASPIRATION HAZARD - Category 1
Ethylbenzene	ASPIRATION HAZARD - Category 1

Information on the likely routes of exposure : Not available.

Potential acute health effects

Eye contact : Causes serious eye irritation.

Inhalation : Can cause central nervous system (CNS) depression. May cause drowsiness and dizziness. May cause respiratory irritation.

Skin contact : No known significant effects or critical hazards.

Ingestion : Can cause central nervous system (CNS) depression. May be fatal if swallowed and enters airways. Irritating to mouth, throat and stomach.

Symptoms related to the physical, chemical and toxicological characteristics

Eye contact : Adverse symptoms may include the following:
pain or irritation
watering
redness

Inhalation : Adverse symptoms may include the following:
respiratory tract irritation
coughing
nausea or vomiting
headache
drowsiness/fatigue
dizziness/vertigo
unconsciousness

Skin contact : No specific data.

Ingestion : Adverse symptoms may include the following:
nausea or vomiting

Delayed and immediate effects and also chronic effects from short and long term exposure

Short term exposure

Potential immediate effects : Not available.

Potential delayed effects : Not available.

Long term exposure

Potential immediate effects : Not available.

Potential delayed effects : Not available.

Potential chronic health effects

Not available.

General : May cause damage to organs through prolonged or repeated exposure.

Carcinogenicity : Suspected of causing cancer. Risk of cancer depends on duration and level of exposure.

Mutagenicity : No known significant effects or critical hazards.

Teratogenicity : No known significant effects or critical hazards.

Developmental effects : No known significant effects or critical hazards.

Fertility effects : No known significant effects or critical hazards.

Numerical measures of toxicity

Acute toxicity estimates

Route	ATE value
Oral Inhalation (gases)	17496.5 mg/kg 24763.1 ppm

Section 12. Ecological information

Toxicity

Product/ingredient name	Result	Species	Exposure
Acetone	Acute EC50 20.565 mg/l Marine water	Algae - Ulva pertusa	96 hours
	Acute LC50 6000000 µg/l Fresh water	Crustaceans - Gammarus pulex	48 hours
	Acute LC50 10000 µg/l Fresh water	Daphnia - Daphnia magna	48 hours
	Acute LC50 5600 ppm Fresh water	Fish - Poecilia reticulata	96 hours
	Chronic NOEC 4.95 mg/l Marine water	Algae - Ulva pertusa	96 hours
	Chronic NOEC 0.016 ml/L Fresh water	Crustaceans - Daphniidae	21 days
	Chronic NOEC 0.1 ml/L Fresh water	Daphnia - Daphnia magna - Neonate	21 days
	Chronic NOEC 5 µg/l Marine water	Fish - Gasterosteus aculeatus - Larvae	42 days
Xylene	Acute LC50 8500 µg/l Marine water	Crustaceans - Palaemonetes pugio	48 hours
	Acute LC50 13400 µg/l Fresh water	Fish - Pimephales promelas	96 hours
Lt. Aliphatic Hydrocarbon Solvent	Acute LC50 >100000 ppm Fresh water	Fish - Oncorhynchus mykiss	96 hours
Ethylbenzene	Acute EC50 4600 µg/l Fresh water	Algae - Pseudokirchneriella subcapitata	72 hours
	Acute EC50 3600 µg/l Fresh water	Algae - Pseudokirchneriella subcapitata	96 hours
	Acute EC50 6530 µg/l Fresh water	Crustaceans - Artemia sp. - Nauplii	48 hours
	Acute EC50 2930 µg/l Fresh water	Daphnia - Daphnia magna - Neonate	48 hours
	Acute LC50 4200 µg/l Fresh water	Fish - Oncorhynchus mykiss	96 hours
Titanium Dioxide	Acute LC50 >1000000 µg/l Marine water	Fish - Fundulus heteroclitus	96 hours

Persistence and degradability

Product/ingredient name	Aquatic half-life	Photolysis	Biodegradability
Acetone	-	-	Readily
Xylene	-	-	Readily
Ethylbenzene	-	-	Readily

Bioaccumulative potential

Product/ingredient name	$LogP_{ow}$	BCF	Potential
Xylene	-	8.1 to 25.9	low
Lt. Aliphatic Hydrocarbon Solvent	-	10 to 2500	high
Titanium Dioxide	-	352	low

Mobility in soil

Soil/water partition coefficient (K_{OC}) : Not available.

Other adverse effects : No known significant effects or critical hazards.

Section 13. Disposal considerations

Disposal methods : The generation of waste should be avoided or minimized wherever possible. Disposal of this product, solutions and any by-products should at all times comply with the requirements of environmental protection and waste disposal legislation and any regional local authority requirements. Dispose of surplus and non-recyclable products via a licensed waste disposal contractor. Waste should not be disposed of untreated to the sewer unless fully compliant with the requirements of all authorities with jurisdiction. Waste packaging should be recycled. Incineration or landfill should only be considered when recycling is not feasible. This material and its container must be disposed of in a safe way. Empty containers or liners may retain some product residues. Do not puncture or incinerate container.

Section 14. Transport information

	DOT Classification	TDG Classification	Mexico Classification	IATA	IMDG
UN number	UN1950	UN1950	UN1950	UN1950	UN1950
UN proper shipping name	AEROSOLS	AEROSOLS	AEROSOLS	AEROSOLS, flammable	AEROSOLS
Transport hazard class(es)	2.1 	2.1 	2.1 	2.1 	2.1 
Packing group	-	-	-	-	-
Environmental hazards	No.	No.	No.	No.	No.
Additional information	**Special provisions** LIMITED QUANTITY	**Special provisions** LIMITED QUANTITY	**Special provisions** (ERG#126)	**Special provisions** LIMITED QUANTITY	**Emergency schedules (EmS)** LIMITED QUANTITY, F-D, S-U

Special precautions for user : Multi-modal shipping descriptions are provided for informational purposes and do not consider container sizes. The presence of a shipping description for a particular mode of transport (sea, air, etc.), does not indicate that the product is packaged suitably for that mode of transport. All packaging must be reviewed for suitability prior to shipment, and compliance with the applicable regulations is the sole responsibility of the person offering the product for transport. People loading and unloading dangerous goods must be trained on all of the risks deriving from the substances and on all actions in case of emergency situations.

Transport in bulk according to Annex II of MARPOL 73/78 and the IBC Code : Not available.

Section 15. Regulatory information

U.S. Federal regulations :

State regulations

California Prop. 65

WARNING: This product contains chemicals known to the State of California to cause cancer and birth defects or other reproductive harm.

Section 16. Other information

Hazardous Material Information System (U.S.A.)

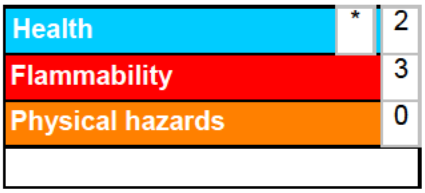

Caution: HMIS® ratings are based on a 0-4 rating scale, with 0 representing minimal hazards or risks, and 4 representing significant hazards or risks Although HMIS® ratings are not required on SDSs under 29 CFR 1910. 1200, the preparer may choose to provide them. HMIS® ratings are to be used with a fully implemented HMIS® program. HMIS® is a registered mark of the National Paint & Coatings Association (NPCA). HMIS® materials may be purchased exclusively from J. J. Keller (800) 327-6868.

The customer is responsible for determining the PPE code for this material.

Notice to reader

It is recommended that each customer or recipient of this Safety Data Sheet (SDS) study it carefully and consult resources, as necessary or appropriate, to become aware of and understand the data contained in this SDS and any hazards associated with the product. This information is provided in good faith and believed to be accurate as of the effective date herein. However, no warranty, express or implied, is given. The information presented here applies only to the product as shipped. The addition of any material can change the composition, hazards and risks of the product. Regulatory requirements are subject to change and may differ between various locations and jurisdictions. The customer/buyer/user is responsible to ensure that his activities comply with all country, federal, state, provincial or local laws. The conditions for use of the product are not under the control of the manufacturer; the customer/buyer/user is responsible to determine the conditions necessary for the safe use of this product. The customer/buyer/user should not use the product for any purpose other than the purpose shown in the applicable section of this SDS without first referring to the supplier and obtaining written handling instructions. Due to the proliferation of sources for information such as manufacturer-specific SDS, the manufacturer cannot be responsible for SDSs obtained from any other source.

SAFETY DATA SHEET

ROTOROIL 8000 F2

Version: 1.0 | Revision Date: 12/05/2014 | Print Date: 05/17/2016

SECTION 1. PRODUCT AND COMPANY IDENTIFICATION

Product name : ROTOROIL 8000 F2

Product Use Description: Lubricant

Company:

Manufacturer
Mattei Compressors, Inc.
9635 Liberty Rd.
Randallstown, MD
21133
United States of America

Telephone: +1 410-521-7020

Emergency telephone number:

CHEMTREC: (24 hours) 800-424-9300
:
: 703-527-3887

For additional emergency telephone numbers see section 16 of the Safety Data Sheet.

Prepared by

Product Safety Department
(US) +1 866-430-2775

MSDSRequest@chemtura.com

Recommended use of the chemical and restrictions on use

Recommended use : Lubricant

SECTION 2. HAZARDS IDENTIFICATION

Form	liquid

GHS Classification

Skin sensitisation : Category 1
Acute aquatic toxicity : Category 3
Chronic aquatic toxicity : Category 3

GHS Label element

Signal word : **Warning**

Hazard pictograms :



Hazard statements : H317 May cause an allergic skin reaction.
H412 Harmful to aquatic life with long lasting effects.

Other hazards : None

Precautionary statements : **Prevention:**
P261 Avoid breathing dust/ fume/ gas/ mist/ vapours/ spray.
P272 Contaminated work clothing should not be allowed out of the workplace.
P273 Avoid release to the environment.
P280 Wear protective gloves.
Response:
P302 + P352 IF ON SKIN: Wash with plenty of soap and water.
P333 + P313 If skin irritation or rash occurs: Get medical advice/ attention.
P363 Wash contaminated clothing before reuse.
Disposal:
P501 Dispose of contents/ container to an approved waste disposal plant.

Carcinogenicity:

IARC No component of this product present at levels greater than or equal to 0.1% is identified as probable, possible or confirmed human carcinogen by IARC.

No component of this product present at levels greater than or equal to 0.1% is identified as probable, possible or confirmed human carcinogen by IARC.

OSHA No component of this product present at levels greater than or equal to 0.1% is identified as a carcinogen or potential carcinogen by OSHA.

No component of this product present at levels greater than or equal to 0.1% is identified as a carcinogen or potential carcinogen by OSHA.

NTP No component of this product present at levels greater than or equal to 0.1% is identified as a known or anticipated carcinogen by NTP.

No component of this product present at levels greater than or equal to 0.1% is identified as a known or anticipated carcinogen by NTP.

SECTION 3. COMPOSITION/INFORMATION ON INGREDIENTS

Hazardous components

Chemical Name	CAS-No.	Concentration (%)
Phenol, isobutylenated, phosphate (3:1)	68937-40-6	>= 1 - < 5 %
NJTS-46728100000-0001		>= 1 - < 5 %
NJTS#: 46728100000-0002 - Proprietary amine		>= 0.1 - < 1 %

SECTION 4. FIRST AID MEASURES

If inhaled : If inhaled
Move to fresh air.
If not breathing, give artificial respiration.
If breathing is difficult, give oxygen.
In case of bluish discolouration (lips, ear lobes, fingernails), give oxygen as quickly as possible.
If symptoms persist, call a physician.

In case of skin contact : In case of skin contact
Wash off with soap and water.
Remove contaminated clothing and shoes.
Wash contaminated clothing before re-use.
Get medical attention if irritation develops and persists.

In case of eye contact : In case of eye contact
Rinse thoroughly with plenty of water, also under the eyelids.
If eye irritation persists, consult a specialist.

If swallowed : If swallowed, DO NOT induce vomiting.
Consult a physician if necessary.

Most important symptoms and effects, both acute and delayed : No information available.

Notes to physician : No information available.

SECTION 5. FIREFIGHTING MEASURES

Suitable extinguishing media : Carbon dioxide (CO_2)
Dry powder
Foam
Alcohol-resistant foam
Water mist

Unsuitable extinguishing media : High volume water jet

Specific hazards during firefighting : Burning produces noxious and toxic fumes.

Specific extinguishing : In the event of fire, cool tanks with water spray.

methods

Special protective equipment for firefighters : In the event of fire, wear self-contained breathing apparatus.
Use personal protective equipment.

SECTION 6. ACCIDENTAL RELEASE MEASURES

Personal precautions, protective equipment and emergency procedures : Use personal protective equipment.
Ensure adequate ventilation.

Environmental precautions : Should not be released into the environment.
Do not contaminate water.
Do not flush into surface water or sanitary sewer system.

Methods and materials for containment and cleaning up : Contain spillage, soak up with non-combustible absorbent material, (e.g. sand, earth, diatomaceous earth, vermiculite) and transfer to a container for disposal according to local / national regulations (see section 13).

SECTION 7. HANDLING AND STORAGE

Advice on safe handling : Handle in accordance with good industrial hygiene and safety practice.
Keep container closed when not in use.
Do not use pressure to empty drums.
Ensure all equipment is electrically grounded before beginning transfer operations.

Conditions for safe storage : Keep container tightly closed in a dry and well-ventilated place.

Materials to avoid : Strong acids and strong bases

SECTION 8. EXPOSURE CONTROLS/PERSONAL PROTECTION

Components with workplace control parameters

NJTS#: 46728100000-0002 - Proprietary amine		TWA	10 ml/m3	ACGIH

Personal protective equipment

Respiratory protection : Breathing apparatus needed only when aerosol or mist is formed.
In the case of vapour formation use a respirator with an approved filter.

Hand protection
Remarks : Neoprene gloves

Eye protection	:	Safety glasses with side-shields Tightly fitting safety goggles
Skin and body protection	:	impervious clothing
Hygiene measures	:	Avoid contact with skin, eyes and clothing. Provide adequate ventilation. Do not breathe dust or spray mist.

SECTION 9. PHYSICAL AND CHEMICAL PROPERTIES

Appearance	:	liquid
pH	:	No data available
Melting point/range	:	Not applicable
Boiling point/boiling range	:	No data available
Flash point	:	501 °C
Upper explosion limit	:	No data available
Lower explosion limit	:	No data available
Vapour pressure	:	No data available
Relative density	:	No data available
Solubility(ies)		
Water solubility	:	slightly soluble
Partition coefficient: n-octanol/water	:	No data available
Auto-ignition temperature	:	No data available
Viscosity		
Viscosity, kinematic	:	No data available

SECTION 10. STABILITY AND REACTIVITY

Reactivity	:	No dangerous reaction known under conditions of normal use.
Chemical stability	:	Stable under normal conditions.
Possibility of hazardous reactions	:	Hazardous polymerisation does not occur.
Conditions to avoid	:	Heat.

Incompatible materials	:	Strong acids and strong bases
Hazardous decomposition products	:	Carbon oxides

SECTION 11. TOXICOLOGICAL INFORMATION

Acute oral toxicity NJTS-46728100000-0001 (Component)	:	LD50: > 2,000 mg/kg Species: Rat Method: OECD Test Guideline 401
NJTS#: 46728100000-0002 - Proprietary amine (Component)	:	LD50: 1,625 mg/kg Species: Rat
Acute dermal toxicity NJTS-46728100000-0001 (Component)	:	LD50: > 2,000 mg/kg Species: Rat
NJTS#: 46728100000-0002 - Proprietary amine (Component)	:	LD50 Dermal: > 5,000 mg/kg Species: Rabbit
Skin irritation NJTS-46728100000-0001 (Component)	:	Species: Rabbit Result: No skin irritation Method: OECD Test Guideline 404
NJTS#: 46728100000-0002 - Proprietary amine (Component)	:	Species: Rabbit Result: No skin irritation Method: Draize Test
Eye irritation NJTS-46728100000-0001 (Component)	:	Species: Rabbit Result: No eye irritation Method: OECD Test Guideline 405
NJTS#: 46728100000-0002 - Proprietary amine (Component)	:	Species: Rabbit Result: No eye irritation Method: OECD Test Guideline 405
Sensitisation NJTS-46728100000-0001 (Component)	:	Species: Guinea pig Classification: Did not cause sensitisation on laboratory animals. Method: OECD Test Guideline 406
NJTS#: 46728100000-0002 - Proprietary amine (Component)	:	Maximisation Test (GPMT) Species: Guinea pig Classification: May cause sensitisation by skin contact. Result: May cause sensitisation by skin contact.

Patch Test
Species: Human
Classification: May cause sensitisation by skin contact.
Result: The product is a skin sensitiser, sub-category 1A.

CMR effects

NJTS-46728100000-0001 (Component)	:	Mutagenicity: Not mutagenic in Ames Test.
NJTS#: 46728100000-0002 - Proprietary amine (Component)	:	Carcinogenicity: Animal testing did not show any carcinogenic effects. Mutagenicity: Animal testing did not show any mutagenic effects., Tests on bacterial or mammalian cell cultures did not show mutagenic effects.
Further information (Product)	:	There is no data available for this product.

SECTION 12. ECOLOGICAL INFORMATION

Ecotoxicity effects

Toxicity to fish (Product)	:	Remarks: No data available
Toxicity to daphnia and other aquatic invertebrates (Product)	:	Remarks: No data available
Toxicity to algae (Product)	:	Remarks: No data available

Toxicity to bacteria

NJTS#: 46728100000-0002 - Proprietary amine (Component)	:	EC50: 2 mg/l Exposure time: 48 h Species: Protozoa EC50: > 10,000 mg/l Exposure time: 3 h Species: Bacteria

Toxicity to fish (Chronic toxicity)

Phenol, isobutylenated, phosphate (3:1) (Component)	:	NOEC: 0.093 mg/l Exposure time: 90 d

Toxicity to daphnia and other aquatic invertebrates (Chronic toxicity)

Phenol, isobutylenated,	:	NOEC: 0.0399 mg/l

phosphate (3:1) (Component)		Exposure time: 21 d
NJTS#: 46728100000-0002 - Proprietary amine (Component)	:	NOEC: 0.02 mg/l Exposure time: 21 d Species: Daphnia magna (Water flea) Analytical monitoring: yes

Elimination information (persistence and degradability)

Bioaccumulation (Product)	:	Remarks: No data available
Mobility (Product)	:	Remarks: No data available
Biodegradability NJTS-46728100000-0001 (Component)	:	Result: According to the results of tests of biodegradability this product is not readily biodegradable. Method: CO2 Evolution Test
NJTS#: 46728100000-0002 - Proprietary amine (Component)	:	aerobic Result: According to the results of tests of biodegradability this product is not readily biodegradable. 0 % Method: OECD Test Guideline 301

Further information on ecology

Ecotoxicology Assessment

Results of PBT assessment (Product)
This substance is not considered to be persistent, bioaccumulating and toxic (PBT).

Additional ecological information (Product)	:	There is no data available for this product.

SECTION 13. DISPOSAL CONSIDERATIONS

Disposal methods

Waste from residues	:	In accordance with local and national regulations.
Contaminated packaging	:	Do not burn, or use a cutting torch on, the empty drum.

SECTION 14. TRANSPORT INFORMATION

ADR
Not dangerous goods

RID
Not dangerous goods

MERCOSUR
Not dangerous goods

DOT
Not dangerous goods

IATA
Not dangerous goods

IMDG
Not dangerous goods

SECTION 15. REGULATORY INFORMATION

EPCRA - Emergency Planning and Community Right-to-Know Act

SARA304 Reportable Quantity
This material does not contain any components with a section 304 EHS RQ.

SARA 311/312 Hazards : Acute Health Hazard

SARA 313 : This material does not contain any chemical components with known CAS numbers that exceed the threshold (De Minimis) reporting levels established by SARA Title III, Section 313.

US State Regulations

California Prop 65 WARNING! This product contains a chemical known to the State of California to cause cancer.

aniline	62-53-3
1-naphthylamine	134-32-7
2-naphthylamine	91-59-8

The components of this product are reported in the following inventories:

US.TSCA	On TSCA Inventory
DSL	All components of this product are on the Canadian DSL.
AICS	On the inventory, or in compliance with the inventory
NZIoC	Not in compliance with the inventory
ENCS	On the inventory, or in compliance with the inventory
KECI	On the inventory, or in compliance with the inventory
PICCS	Not in compliance with the inventory
IECSC	On the inventory, or in compliance with the inventory

SECTION 16. OTHER INFORMATION

Further information

Other Emergency Phone Number

Latin America:	Brazil	+55 113 711 9144
	All other countries	+44 (0) 1235 239 670
Mexico:		+52 555 004 8763

The information provided in this Safety Data Sheet is correct to the best of our knowledge, information and belief at the date of its publication. The information given is designed only as a guidance for safe handling, use, processing, storage, transportation, disposal and release and is not to be considered a warranty or quality specification. The information relates only to the specific material designated and may not be valid for such material used in combination with any other materials or in any process, unless specified in the text.

Flammability Document # 6810-005

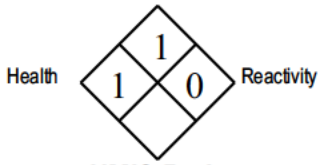

HMIS Rating

MATERIAL SAFETY DATA SHEET

GENERAL INFORMATION

PRODUCT NAME OR NUMBER (as it appears on label)	CATALOG NUMBER
Noalox® Anti-Oxidant	All "30" Series
MANUFACTURER'S NAME	EMERGENCY TELEPHONE NO.
IDEAL INDUSTRIES, INC.	**(815) 895-5181**
ADDRESS (Number, Street, City, State, Zip Code)	
Becker Place, Sycamore, IL 60178	
HAZARDOUS MATERIAL DESCRIPTION, PROPER SHIPPING NAME, HAZARD CLASS, HAZARD CLASS NO., HAZARD ID NO. (49 CFR 172.101)	
None	
CHEMICAL DESCRIPTION	FORMULA
Petroleum-Based Mixture	Proprietary

SECTION I - INGREDIENTS

CAS REGISTRY NO.	%W	CHEMICAL NAME(S)*	Listed as a carcinogen in NTP, I ARC or OSHA 1910(z) (specify)
9003-29-6	<80	Polybutene	No
7440-66-6	20	Zinc Dust	No
112945-52-5	<5	Silicon Dioxide	No

SECTION II - PHYSICAL DATA

BOILING POINT	SPECIFIC GRAVITY (H_2O=1)	PERCENT VOLATILE BY VOLUME (%)
>500 °F °C	1.04	N.E.
SOLUBILITY IN WATER	pH =	PERCENT SOLID BY WEIGHT (%)
Moderate	6.5 - 8.0	100
APPEARANCE AND ODOR		IS MATERIAL: LIQUID SOLID GEL GAS (PASTE) POWDER
Gray solid paste, mild odor		

SECTION III - FIRE AND EXPLOSION HAZARD DATA

FLASH POINT	FLAMMABLE LIMITS	LEL	UEL
310 F method used C.O.C		N.E.	N.E.
EXTINGUISHING MEDIA			
Use dry chemical, carbon dioxide or foam.			
SPECIAL FIRE FIGHTING PROCEDURES			
Self-contained respiratory protection should be provided for fire fighters. Keep fire exposed containers cool with water.			
UNUSUAL FIRE AND EXPLOSION HAZARDS			
Water or foam may cause a frothing reaction. (Water reacts with zinc dust).			

* None of the chemical raw materials contained in this formulation are considered hazardous under the Federal Hazards Communication Standard 29 C. F. R 1910.1200

SECTION IV - HEALTH HAZARD INFORMATION

EFFECTS OF OVEREXPOSURE - Conditions to Avoid	None normally expected. Upon prolonged contact, may cause temporary eye discomfort.
THRESHOLD LIMIT VALUE	Zinc dust or silicon dioxide as dust: 10mg/m.
PRIMARY ROUTES OF ENTRY Inhalation ☐ Skin Contact ☒ Other (specify)	
EMERGENCY FIRST AID PROCEDURES SKIN CONTACT:	Wash with soap and water for 15 minutes
EYE CONTACT:	Flush with water for 15 minutes
INGESTION:	Induce vomiting and consult physician or local poison control center.

SECTION V - REACTIVITY DATA

STABILITY	UNSTABLE		CONDITIONS TO AVOID: Avoid conditions of moisture or high humidity.
	STABLE	X	
INCOMPATIBILITY (materials to avoid)	Avoid strong oxidizers, strong acids and water.		
HAZARDOUS DECOMPOSTION PRODUCTS:	Excessive heat and burning may release oxides of carbon.		
HAZARDOUS POLYMERIZATION	MAY OCCUR		CONDITIONS TO AVOID: None
	WILL NOT OCCUR	X	

SECTION VI - SPILL AND LEAK PROCEDURES

STEPS TO BE TAKEN IF MATERIAL IS RELEASED OR SPILLED	Wipe up, shovel or vacuum spilled material. Clean up spills immediately.
Use absorbent media.	
WASTE DISPOSAL METHOD	Comply with Federal, state and local regulations for solid landfill.
CERCLA (Superfund) REPORTABLE QUANTITY (in lbs)	None Required
RCRA HAZARDOUS WASTE NO. (40CFR 261.33)	None Required
VOLATILE ORGANIC COMPOUND (VOC) (as packaged, minus water)	128 g/l, calculated
[3] Theoretical _____ lb/gal N/A	[3] Analytical _____ lb/gal N/A

SECTION VII - PERSONAL PROTECTION INFORMATION

RESPIRATORY PROTECTION (specify type)	If TLV exceeded, use NIOSH respirator		
VENTILATION	LOCAL EXHAUST (Specify Rate) Necessary above TLV	SPECIAL	None
	MECHANICAL (General) (Specify Rate) Recommended in closed areas	OTHER	None
PROTECTIVE GLOVES (specify type) None normally needed -Neoprene if necessary	EYE PROTECTION (specify type)	Safety glasses or splash goggles.	
OTHER PROTECTIVE EQUIPMENT	Eye fountain in work area is recommended.		

SECTION VIII - SPECIAL PRECAUTIONS

PRECAUTIONS TO BE TAKEN IN HANDLING AND STORING	Store in dry conditions at temperatures between 40 - 120 F.
OTHER PRECAUTIONS	Keep away from children, infants and pets.

SECTION IX - ADDITIONAL INFORMATION

This product contains the following materials that are subject to the reporting requirements of Section 313 of EPCRA:

CAS # 7440-66-6, Zinc Dust, 20%

N/A = Not Applicable, N.E. = None Established

THIS MATERIAL SAFETY DATA SHEET PREPARED BY:		
NAME	James R. MacMurdo	SIGNATURE
TITLE	Director, Corporate Quality Assurance	
DATE	6/12/13	

SAFETY DATA SHEET

Klean Strip Odorless Mineral Spirits

Printed: 10/23/2014
Revision: 09/08/2014
Supersedes Revision: 06/04/2010

1. PRODUCT AND COMPANY IDENTIFICATION

Product Name: Klean Strip Odorless Mineral Spirits

Reference #: 1631.1

Company Name: W. M. Barr
2105 Channel Avenue
Memphis, TN 38113

Phone Number: (901)775-0100

Web site address: www.wmbarr.com

Emergency Contact: 3E 24 Hour Emergency Contact (800)451-8346
Information: W.M. Barr Customer Service (800)398-3892

Intended Use: Paint, stain, and varnish thinning.

Synonyms: GKSP94006P, QKSP94005, QKSP94205, GKSP94006, GKSP94214

2. HAZARDS IDENTIFICATION

Aspiration Toxicity, Category 1
Flammable Liquids, Category 3



GHS Signal Word: **Danger**

GHS Hazard Phrases:
H304: May be fatal if swallowed and enters airways.
H226: Flammable liquid and vapor.

GHS Precaution Phrases:
P233: Keep container tightly closed.
P210: Keep away from heat/sparks/open flames/hot surfaces. - No smoking.
P280: Wear protective gloves/protective clothing/eye protection/face protection.
P240: Ground/bond container and receiving equipment.
P241: Use explosion-proof electrical/ventilating/lighting equipment.
P243: Take precautionary measures against static discharge.
P242: Use only non-sparking tools.

GHS Response Phrases:
P301+310: IF SWALLOWED: Immediately call a POISON CENTER or doctor/physician.
P331: Do NOT induce vomiting.
P370+378: In case of fire, use dry chemical to extinguish.
P303+361+353: IF ON SKIN (or hair): Remove/take off immediately all contaminated clothing. Rinse skin with water/shower.

GHS Storage and Disposal Phrases:
P405: Store locked up.
P501: Dispose of contents/container according to local, state and federal regulations.
P403+235: Store in cool/well-ventilated place.

Hazard Rating System:

HMIS:

HEALTH	* 1
FLAMMABILITY	2
PHYSICAL	0
PPE	X

NFPA:

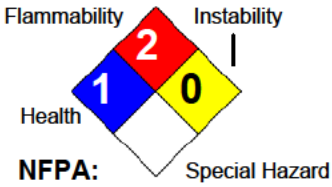

OSHA Regulatory Status: This material is classified as hazardous under OSHA regulations.

Potential Health Effects (Acute and Chronic):

Inhalation Acute Exposure Effects:
Vapor concentration may cause headache, dizziness, irritation of the respiratory tract, eye irritation, stupor, depression of the central nervous system, watering of the eyes, weakness, nausea, muscle twitches, and kidney effects. Aspiration into lungs may cause pneumonia or death. Severe overexposure may cause convulsions, unconsciousness, and death.

Skin Contact Acute Exposure Effects:
May cause irritation.

Eye Contact Acute Exposure Effects:
Liquid contact may cause irritation.

Ingestion Acute Exposure Effects:
Harmful or fatal if swallowed. May cause nausea, weakness, muscle twitches, gastrointestinal irritation, diarrhea, unconsciousness, and death.

Chronic Exposure Effects:
Reports have associated repeated and prolonged overexposure to solvents with neurological and other physiological damage. Repeated or prolonged skin contact may cause redness, irritation, and scaling of the skin. May cause skin irritation, anemia, bone marrow damage, liver damage, and jaundice.

Medical Conditions Generally Aggravated By Exposure: None known.

3. COMPOSITION/INFORMATION ON INGREDIENTS

CAS #	Hazardous Components (Chemical Name)	Concentration
64742-47-8	Hydrotreated light distillate (petroleum)	100.0 %

4. FIRST AID MEASURES

Emergency and First Aid Procedures:

Inhalation:
If user experiences breathing difficulty, move to air free of vapors. Administer oxygen or artificial respiration until medical assistance can be rendered.

Skin contact:
Wash with soap and large quantities of water for at least 15 minutes. Seek medical attention if irritation from contact persists.

Eye contact:
Immediately flush eyes with water, remove nay contact lens, continue flushing with water for at least 15 minutes. Get medical attention.

Ingestion:
Do not induce vomiting. Call your poison control center, hospital emergency room, or physician immediately.

Signs and Symptoms Of Exposure:

Primary routes of exposure:
Inhalation, ingestion, and dermal.

Note to Physician:

Call your local poison control center for further instructions.

5. FIRE FIGHTING MEASURES

NFPA Class II

Flash Pt: > 105.00 F

Explosive Limits: LEL: 0.8 UEL: 6

Autoignition Pt: No data.

Suitable Extinguishing Media: Use carbon dioxide, dry chemical powder, or foam.

Fire Fighting Instructions: Self-contained respiratory protection should be provided for fire fighters fighting fires in buildings or confined areas. Storage containers exposed to fire should be kept cool with water spray to prevent pressure build-up. Stay away from heads of containers that have been exposed to intense heat or flame.

Flammable Properties and Hazards: No data available.

6. ACCIDENTAL RELEASE MEASURES

Steps To Be Taken In Case Material Is Released Or Spilled:

Clean-up:
Keep unnecessary people away, isolate hazard area and deny entry. Stay upwind, out of low areas, and ventilate closed spaces before entering. Shut off ignition sources, keep flares, smoking or flames out of hazard area.

Small spills:
Take up the spilled liquid with sand, earth, or other noncombustible absorbent material and place in a plastic container where applicable.

Large spills:
Dike far ahead of spill for later disposal.

7. HANDLING AND STORAGE

Precautions To Be Taken in Handling: Read carefully all cautions and directions on product label before use. Since empty container retains residue, follow all label warnings even after container is empty. Dispose of empty container according to all regulations. Do not reuse this container.

Precautions To Be Taken in Storing: Keep container tightly closed when not in use. Store in a cool, dry place. Do not store near flames or at elevated temperatures.

8. EXPOSURE CONTROLS/PERSONAL PROTECTION

CAS #	Partial Chemical Name	OSHA TWA	ACGIH TWA	Other Limits
64742-47-8	Hydrotreated light distillate (petroleum)	No data.	TLV: 200 mg/m3	No data.

Respiratory Equipment (Specify Type): For OSHA controlled work place and other regular users. Use only with adequate ventilation under engineered air control systems designed to prevent exceeding appropriate TLV. For occasional use, where engineered air control is not feasible, use properly maintained and properly fitted NIOSH approved respirator for organic solvent vapors. A dust mask does not provide protection against vapors.

Eye Protection: Safety glasses, chemical goggles or face shields are recommended to safeguard against potential eye contact, irritation, or injury. Contact lenses should not be worn while working with chemicals.

Protective Gloves: Wear impermeable gloves. Gloves contaminated with product should be discarded. Promptly remove clothing that becomes soiled with product.

Other Protective Clothing: Various application methods can dictate use of additional protective safety equipment, such as impermeable aprons, etc., to minimize exposure. Before reuse, thoroughly

clean any clothing or protective equipment that has been contaminated by prior use. Discard any clothing or other protective equipment that cannot be decontaminated, such as gloves or shoes.

Engineering Controls (Ventilation etc.): Use only with adequate ventilation to prevent build-up of vapors. Open all windows and doors. Use only with a cross ventilation of moving fresh air across the work area. If strong odor is noticed or you experience slight dizziness, headache, nausea, or eye-watering -- Stop -- ventilation is inadequate. Leave area immediately.

Work/Hygienic/Maintenance Practices: A source of clean water should be available in the work area for flushing eyes and skin.
Do not eat, drink, or smoke in the work area.
Wash hands thoroughly after use.

9. PHYSICAL AND CHEMICAL PROPERTIES

Physical States: [ ] Gas [X] Liquid [ ] Solid

Appearance and Odor: Colorless to light yellow
Solvent odor

Melting Point: No data.

Boiling Point: 318.00 F - 354.00 F

Autoignition Pt: No data.

Flash Pt: > 105.00 F

Explosive Limits: LEL: 0.8 UEL: 6

Specific Gravity (Water = 1): 0.78

Vapor Pressure (vs. Air or mm Hg): No data.

Vapor Density (vs. Air = 1): 5 Air = 1

Evaporation Rate: No data.

Solubility in Water: No data.

Solubility Notes: Very slightly soluble in cold water (<0.1% w/w)

Percent Volatile: 100.0 % by weight.

VOC / Volume: 780.0000 G/L

Additional Physical Information Conductivity = <5 picosiemens/meter

10. STABILITY AND REACTIVITY

Stability: Unstable [ ] Stable [X]

Conditions To Avoid - Instability: No data available.

Incompatibility - Materials To Avoid: Incompatible with strong oxidizing agents.

Hazardous Decomposition Or Byproducts: Thermal decomposition may produce carbon monoxide and carbon dioxide.

Possibility of Hazardous Reactions: Will occur [ ] Will not occur [X]

Conditions To Avoid - Hazardous Reactions: No data available.

11. TOXICOLOGICAL INFORMATION

Toxicological Information: No data available.

CAS #	Hazardous Components (Chemical Name)	NTP	IARC	ACGIH	OSHA
64742-47-8	Hydrotreated light distillate (petroleum)	n.a.	n.a.	A4	n.a.

12. ECOLOGICAL INFORMATION

No data available.

13. DISPOSAL CONSIDERATIONS

Waste Disposal Method: Dispose in accordance with applicable local, state, and federal regulations.

14. TRANSPORT INFORMATION

LAND TRANSPORT (US DOT):

DOT Proper Shipping Name: Paint Related Material, Not Regulated
DOT Hazard Class:
UN/NA Number:

MARINE TRANSPORT (IMDG/IMO):

IMDG/IMO Shipping Name: Paint Related Material

EMS: F-E, S-E
UN Number: 1263 **Packing Group:** III
Hazard Class:

AIR TRANSPORT (ICAO/IATA):

ICAO/IATA Shipping Name: Paint Related Material

Packaging Instructions: See IATA Dangerous Goods Regulations
UN Number: 1263 **Packing Group:** III
Hazard Class:

Additional Transport Information: For D.O.T. information, contact W.M. Barr Technical Services at 1-800-398-3892.

The shipper may apply one of the following exceptions: Combustible Liquid, Consumer Commodity, Limited Quantity, Viscous Liquid, Does Not Sustain Combustion, or others, as allowed under 49CFR Hazmat Regulations. Please consult 49CFR Subchapter C to ensure that subsequent shipments comply with these exceptions.

15. REGULATORY INFORMATION

This material meets the EPA 'Hazard Categories' defined for SARA Title III Sections 311/312 as indicated:

[X] Yes [ ] No Acute (immediate) Health Hazard
[X] Yes [ ] No Chronic (delayed) Health Hazard
[X] Yes [ ] No Fire Hazard
[ ] Yes [X] No Sudden Release of Pressure Hazard
[ ] Yes [X] No Reactive Hazard

CAS #	Hazardous Components (Chemical Name)	Other US EPA or State Lists
64742-47-8	Hydrotreated light distillate (petroleum)	CAA HAP,ODC: No; CWA NPDES: No; TSCA: Yes - Inventory; CA PROP.65: No

Regulatory Information Statement: All components of this material are listed on the TSCA Inventory or are exempt.

16. OTHER INFORMATION

Revision Date: 09/08/2014

Preparer Name: W.M. Barr EHS Department (901)775-0100

Additional Information About This Product: No data available.

Company Policy or Disclaimer: The information contained herein is presented in good faith and believed to be accurate as of the effective date shown above. This information is furnished without warranty of any kind. Employers should use this information only as a supplement to other information gathered by them and must make independent determination of suitability and completeness of information from all sources to assure proper use of these materials and the safety and health of employees. Any use of this data and information must be determined by the user to be in accordance with applicable federal, state and local laws and regulations.

Lehigh Hanson
HEIDELBERGCEMENT Group

Safety Data Sheet Portland Cement

Section 1. Identification

GHS product identifier: Portland Cement

Chemical name: Calcium compounds, calcium silicate compounds, and other calcium compounds containing iron and aluminum make up the majority of this product.

Other means of identification: Cement, ASTM Type I, II, III, V, Portland Limestone Cement, Plastic Cement, Hydraulic Cement, Oilwell Cement, Well Cement, Class G Cement, InterCem, Type L, CSA Type GU, GUb, GUL, MS, MH, MHL, HE, HEL, LH, LHL, HS

Relevant identified uses of the substance or mixture and uses advised against: Building materials, construction, a basic ingredient in concrete.

Supplier's details: 300 E. John Carpenter Freeway, Suite 1645
Irving, TX 75062
(972) 653-5500

Emergency telephone number (24 hours): **CHEMTREC: (800) 424-9300**

Section 2. Hazards Identification

Overexposure to portland cement can cause serious, potentially irreversible skin or eye damage in the form of chemical (caustic) burns, including third degree burns. The same serious injury can occur if wet or moist skin has prolonged contact exposure to dry portland cement.

OSHA/HCS status: This material is considered hazardous by the OSHA Hazard Communication Standard (29 CFR 1910.1200).

Classification of the substance or mixture:
SKIN CORROSION/IRRITATION – Category 1
SERIOUS EYE DAMAGE/EYE IRRITATION – Category 1
SKIN SENSITIZATION – Category 1
CARCINOGENICITY/INHALATION – Category 1A
SPECIFIC TARGET ORGAN TOXICITY (SINGLE EXPOSURE)
[Respiratory tract irritation] – Category 3

GHS label elements

Hazard pictograms:



Signal word: Danger

Hazard statements:
Causes severe skin burns and eye damage.
May cause an allergic skin reaction.
May cause respiratory irritation.
May cause cancer.

Precautionary statements:

Prevention: Obtain special instructions before use. Do not handle until all safety precautions have been read and understood. Do not breathe dust. Use outdoors in a well ventilated area. Wash any exposed body parts thouroughly after handling. Wear protective gloves/protective clothing/eye protection/face protection.Contaminated clothing must not be allowed out of the workplace.

Response: If exposed or concerned: Immediately get medical advice/attention if you feel unwell or irritation or rash occurs.If on skin: Wash with plenty of water. Take off contaminated clothing and wash it before reuse. If in eyes: Rinse continuously with water for several minutes. Remove contact lenses, if present and easy to do.If inhaled: Remove person to fresh air and keep comfortable for breathing. If swallowed: Rinse mouth. Do not induce vomiting.

Storage: Restrict or control access to stockpile areas (store locked up). Engulfment hazard: To prevent burial or suffocation, do not enter a confined space, such as a silo, bulk truck or other storage container or vessel that stores or contains cement without an effective procedure for assuring

safety. Store in a well ventilated area. Keep container tightly closed.

Disposal: Dispose of contents/container in accordance with local/regional/national/international regulations.

Hazards not otherwise classified (HNOC): None known

Supplemental Information: Respirable Crystalline Silica (RCS) may cause cancer. Repeated inhalation of respirable crystalline silica (quartz) may cause lung cancer according to IARC and NTP; ACGIH states that it is a suspected cause of cancer. Other forms of RCS (e.g., tridymite and cristobalite) may also be present or formed under certain industrial processes.

Section 3. Composition/information on ingredients

Substance/mixture: Mixture
Chemical Name: Calcium compounds, calcium silicate compounds, and other calcium compounds containing iron and aluminum make up the majority of this product.

CAS number/other identifiers

Ingredient name	%	CAS number
Portland Cement	100%	65997-15-1
The structure of Portland cement may contain the following in some concentration ranges:		
Calcium oxide	A-B	1305-78-8
Quartz	C-D	14808-60-7
Hexavalent chromium*	E-F	18450-29-9
Portland cement also contains gypsum, limestone and magnesium oxide in various concentrations. However, because these components are not classifiable as a hazard under Title 29 Code of Federal Regulations 1910.1200, they are not required to be listed in this section.		
Gypsum	G-H	13397-24-5
Limestone	I-J	1317-65-3
Magnesium oxide	K-L	1309-48-4

Any concentration shown as a range is to protect confidentiality or is due to process variation.
*Hexavalent chromium is included due to dermal sensitivity associated with the component.

There are no additional ingredients present which, within the current knowledge of the supplier and in the concentrations applicable, are classified as hazardous to health or the environment and hence require reporting in this section.

Occupational exposure limits, if available, are listed in Section 8.

Section 4. First aid measures

Description of necessary first aid measures

Eye Contact: Get medical attention immediately. Call a poison center or physician. Immediately flush eyes with plenty of water, occasionally lifting the upper and lower eyelids. Check for and remove any contact lenses. Continue to rinse for at least 20 minutes. Chemical burns must be treated promptly by a physician.

Inhalation: Seek medical help if coughing or other symptoms persist. Inhalation of large amounts of portland cement requires immediate medical attention. Call a poison center or physician. Remove victim to fresh air and keep at rest in a position comfortable for breathing. If the individual is not breathing, if breathing is irregular or if respiratory arrest occurs, provide artificial respiration or oxygen by trained personnel. It may be dangerous to the person providing aid to give mouth-to-mouth resuscitation. If unconscious, place in a recovery position and get medical attention immediately. Maintain an open airway.

Skin Contact: Get medical attention immediately. Heavy exposure to portland cement dust, wet concrete or associated water requires prompt attention. Quickly remove contaminated clothing, shoes, and leather goods such as watchbands and belts. Quickly and gently blot or brush away excess portland cement. Immediately wash thoroughly with lukewarm, gently flowing water and non-abrasive pH natural soap. Seek medical attention for rashes, burns, irritation, dermatitis and prolonged unprotected exposure to wet cement, cement mixtures or liquids from wet cement. Burns should be treated as caustic burns. Portland cement causes skin burns with little warning. Discomfort or pain cannot be relied upon to alert a person to

a serious injury. You may not feel pain or the severity of the burn until hours after the exposure Chemical burns must be treated promptly by a physician. In the event of any complaints or symptoms, avoid further exposure.

Ingestion: Get medical attention immediately. Call a poison center or physician. Have victim rinse mouth thoroughly with water. DO NOT INDUCE VOMITING unless directed to do so by medical personnel. Remove victim to fresh air and keep at rest in a position comfortable for breathing. If material has been swallowed and the exposed person is conscious, give small quantities of water to drink. Have victim drink 60 to 240 mL (2 to 8 oz.) of water. Stop giving water if the exposed person feels sick as vomiting may be dangerous. If vomiting occurs, the head should be kept low so that vomit does not enter the lungs. Chemical burns must be treated promptly by a physician. Never give anything by mouth to an unconscious person. If unconscious, place in recovery position and get medical attention immediately. Maintain an open airway.

Most important symptoms/effects, acute and delayed potential acute health effects

Eye contact: Causes serious eye damage.
Inhalation: May cause respiratory irritation.
Skin contact: Causes severe burns. May cause an allergic skin reaction.
Ingestion: May cause burns to mouth, throat and stomach.

Over-exposure signs/symptoms

Eye contact: Adverse symptoms may include the following: pain, watering and redness.
Inhalation: Adverse symptoms may include the following: respiratory tract irritation and coughing.
Skin contact: Adverse symptoms may include the following: pain or irritation, redness and blistering may occur, skin burns, ulceration and necrosis may occur.
Ingestion: Adverse symptoms may include the following: stomach pains.

Indication of immediate medical attention and special treatment needed, if necessary

Notes to physician: Treat symptomatically. Contact poison treatment specialist immediately if large quantities have been ingested or inhaled.
Specific treatments: Not applicable.
Protection of first-aiders: No action shall be taken involving any personal risk or without suitable training. It may be dangerous to the person providing aid to give mouth-to-mouth resuscitation. Wash contaminated clothing thoroughly with water before removing it, or wear gloves.

See toxicological information (Section 11)

Section 5. Fire-fighting measures

Extinguishing media

Suitable extinguishing media: Use an extinguishing agent suitable for the surrounding fire.
Unsuitable extinguishing media: Do not use water jet or water-based fire extinguishers.
Specific hazards arising from the chemical: No specific fire or explosion hazard.
Hazardous thermal decomposition Products: Decomposition products may include the following materials: carbon dioxide, carbon monoxide, sulfur oxides and metal oxide/oxides.
Special protective actions for fire-fighters: Move containers from fire area if this can be done without risk. Use water spray to keep fire-exposed containers cool.
Special protective equipment for fire-fighters: Fire-fighters should wear appropriate protective equipment and self-contained breathing apparatus (SCBA) with a full face-piece operated in positive pressure mode.

Section 6. Accidental release measures

Personal precautions, protective equipment and emergency procedures

For non-emergency personnel: No action shall be taken involving any personal risk or without suitable training. Keep unnecessary and unprotected personnel from entering. Do not touch or walk through spilled material. Do not

	breathe dust. Provide adequate ventilation. Wear appropriate respirator when ventilation is inadequate. Put on appropriate personal protective equipment.
For emergency responders:	For personal protective clothing requirements, please see Section 8.
Environmental precautions:	Avoid dispersal of spilled material and runoff and contact with soil, waterways, drains and sewers. Inform the relevant authorities if the product has entered the environment, including waterways, soil or air. Materials can enter waterways through drainage systems.

Methods and materials for containment and cleaning up

Small spill:	Move containers from spill area. Avoid dust generation. Do not dry sweep. Vacuum dust with equipment fitted with a HEPA filter and place in a closed, labeled waste container. Place spilled material in a designated, labeled waste container. Dispose of waste material by using a licensed waste disposal contractor.
Large spill:	Move containers from spill area. Approach release from upwind. Prevent entry into sewers, water courses, basements or confined areas. Avoid dust generation. Do not dry sweep. Vacuum dust with equipment fitted with a HEPA filter and place dust in a closed, labeled waste container. Avoid creating dusty conditions and prevent wind dispersal. Large spills to waterways may be hazardous due to alkalinity of the product. Dispose of waste material using a licensed waste disposal contractor. Note: see section 1 for emergency contact information and Section 13 for waste disposal.

Section 7. Handling and storage

Precautions for safe handling

Protective measures:	Put on appropriate personal protective equipment (see Section 8). Persons with a history of skin sensitization problems should not be employed in any process in which this product is used. Avoid exposure by obtaining and following special instructions before use. Do not handle until all safety precautions have been read and understood. Do not get in eyes or on skin or clothing. Do not breathe dust. Do not ingest. Use only with adequate ventilation. Wear appropriate respirator when ventilation is inadequate. Keep in the original container or an approved alternative made from a compatible material and keep the container tightly closed when not in use. Empty containers retain product residue and can be hazardous. Do not reuse container.
Advice on general occupational hygiene:	Eating, drinking and smoking should be prohibited in areas where this material is handled, stored and processed. Workers should wash hands and face before eating, drinking and smoking. Remove contaminated clothing and protective equipment before entering eating areas. See also Section 8 for additional information on hygiene measures.
Conditions for safe storage, including any incompatibilities:	A key to using the product safely requires the user to recognize that portland cement reacts chemically with water to produce calcium hydroxide which can cause severe chemical burns. Every attempt should be made to avoid skin and eye contact with cement. Do not get portland cement inside boots, shoes or gloves. Do not allow wet, saturated clothing to remain against the skin. Promptly remove clothing and shoes that are dusty or wet with cement mixtures. Launder/clean clothing and shoes before reuse. Do not enter a confined space that stores or contains portland cement unless appropriate procedures and protection are available. Portland cement can build up or adhere to the walls of a confined space and then release or fall suddenly (engulfment).

Section 8. Exposure controls/personal protection

Control parameters

Occupational exposure limits

Ingredient name	Exposure limits
Cement, portland, chemicals	**ACGIH TLV (United States, 3/2012)** TWA: 1 mg/m³ 8hours. Form: Respirable fraction **NIOSH REL (United States, 6/2009)** TWA: 5 mg/m³ 10 hours. Form: Respirable fraction TWA: 10 mg/m³ 10 hours. Form: Total **OSHA PEL (United States, 6/2010)** TWA: 5mg/m³. 8 hours. Form: Respirable fraction TWA: 15 mg/m³. 8 hours. Form: Total dust
Calcium oxide	**ACGIH TLV (United States, 3/2012)** TWA: 2 mg/m³ 8 hours **NIOSH REL (United States, 6/2009)** TWA: 2mg/m³ 10 hours. **OSHA PEL (United States, 6/2010)** TWA: 5 mg/m³ 8 hours.
Limestone	**NIOSH REL (United States, 6/2009)** TWA: 5 mg/m³ 10 hours. Form: Respirable fraction TWA: 10 mg/m³ 10 hours. Form: Total **OSHA PEL (United States, 6/2010)** TWA: 5 mg/m³ 8 hours. Form: Respirable fraction TWA: 15 mg/m³ 8 hours. Form: Total dust
Magnesium oxide	**ACGIH TLV (United States, 3/2012)** TWA: 10 mg/m³ 8 hours. Form: Inhalable fraction **OSHA PEL (United States, 6/2010)** TWA: 15 mg/m³ 8 hours. Form: Total particulates
Crystalline Silica (Quartz) (CAS 14808-60-7)	**OSHA PEL (United States, 9/2017)** TWA: 0.3 mg/m³. Form: Total dust (1,2) TWA: 0.05 mg/m³. Form: Respirable (1,2,3) **ACGIH TLV (United States, 3/2012)** TWA: 0.025 mg/m³. Form: Respirable fraction **NIOSH REL (United States, 6/2009)** TWA: 0.05 mg/m³. Form: Respirable dust
Calcium sulfate (gypsum)	**ACGIH TLV (United States, 3/2012)** TWA: 10 mg/m³ 8 hours. Form: Respirable fraction **NIOSH REL (United States, 6/2009)** TWA: 5 mg/m³ 8 hours. Form: Respirable fraction TWA: 10 mg/m³ 8 hours. Form: Total dust **OSHA PEL Z-1 (United States, 2/2006)** TWA: 5 mg/m³ 8 hours. Form: Respirable fraction TWA: 15 mg/m³ 8 hours. Form: Total dust

Appropriate engineering controls: Use only with adequate ventilation. If user operations generate dust, use process enclosures, local exhaust ventilation or other engineering controls to keep worker exposure to airborne contaminants below any recommended or statutory limits.

Environmental exposure controls: Emissions from ventilation or work process equipment should be checked to ensure they comply with the requirements of environmental protection legislation.

Individual protection measures

Hygiene measures: Clean water should always be readily available for skin and (emergency) eye washing. Periodically wash areas contacted by portland cement with a pH neutral soap and clean, uncontaminated water. If clothing becomes saturated with portland cement, garments should be removed and replaced with clean, dry clothing.

Eye/face protection: To prevent eye contact, wear safety glasses with side shields, safety goggles or face shields when handling dust or wet cement. Wearing contact lenses when working with cement is not recommended.

Skin protection

Hand protection: Use impervious, waterproof, abrasion and alkali-resistant gloves. Do not rely on barrier creams in place of impervious gloves. Do not get portland cement inside gloves.

Body protection: Use impervious, waterproof, abrasion and alkali-resistant boots and protective long-sleeved and long-legged clothing to protect the skin from contact with wet portland cement. To reduce foot and ankle exposure, wear impervious boots that are high enough to prevent portland cement from getting inside them. Do not get portland cement inside boots, shoes, or gloves. Remove clothing and protective equipment that becomes saturated with cement and immediately wash exposed areas of the body.

Other skin protection: Appropriate footwear and any additional skin protection measures should be selected based on the task being performed and the risks involved. .

Respiratory protection: Use properly fitted, particulate filter respirator complying with an approved standard if a risk assessment indicates this is necessary. Respirator selection must be based on known or anticipated exposure levels, the hazards of the product, and assigned protection factor of the selected respirator.

Section 9. Physical and chemical properties

Appearance

Physical State:	Solid. [Powder]	**Lower and Upper explosive flammable limits**	Not applicable
Color:	Gray or white	**Vapor pressure:**	Not applicable
Odor:	Odorless	**Vapor density:**	Not applicable
Odor threshold:	Not available	**Relative density:**	2.3 to 3.1
pH:	>11.5 [Conc. (% w/w): 1%]	**Solubility:**	Slightly soluble in water
Melting point:	Not available	**Solubility in water:**	0.1 to 1%
Boiling point:	>1000°C (>1832°F)	**Partition coefficient: n-octanol/water:**	Not applicable
Flash point:	Not flammable. Not combustible	**Auto-ignition temperature:**	Not applicable
Burning time:	Not available	**Decomposition temperature:**	Not available
Burning rate:	Not available	**SADT:**	Not available
Evaporation Rate:	Not applicable	**Viscosity:**	Not applicable
Flammability (solid, gas):	Not applicable		

Section 10. Stability and reactivity

Reactivity: Reacts slowly with water forming hydrated compounds, releasing heat and producing a strong alkaline solution until reaction is substantially complete.

Chemical Stability: The product is stable.

Possibility of hazardous reactions: Under normal circumstances of storage and use, hazardous reactions will not occur.

Conditions to avoid: No specific data.

Incompatible materials: Reactive or incompatible with the following materials: oxidizing materials, acids, aluminum and ammonium salt. Portland cement is highly alkaline and will react with acids to produce a violent, heat-generating reaction. Toxic gases or vapors may be given off depending on the acid involved. Reacts with acids, aluminum metals and ammonium salts. Aluminum powder and other alkali and alkaline earth elements will react in wet mortar or concrete, liberating hydrogen gas. Limestone ignites on contact with fluorine and is incompatible with acids, alum, ammonium salts, and magnesium. Silica reacts violently with powerful oxidizing agents such as fluorine, boron trifluoride, chlorine trifluoride, manganese trifluoride, and oxygen difluoride yielding possible fire and/or explosions. Silicates dissolve readily in hydrofluoric acid producing a corrosive gas-silicon tetrafluoride.

Hazardous decomposition products: Under normal conditions of storage and use, hazardous decomposition products should not be produced.

Section 11. Toxicological information

Information on toxicological effects

Acute toxicity: Portland Cement LD50/LC50 = Not available
Irritation/Corrosion: **Skin:** May cause skin irritation. May cause serious burns in the presence of moisture.
Eyes: Causes serious eye damage. May cause burns in the presence of moisture.
Respiratory: May cause respiratory tract irritation.
Sensitization: May cause sensitization due to the potential presence of trace amounts of hexavalent chromium.
Mutagenicity: There are no data available.

Carcinogenicity:
Classification below:

Product/ingredient name	OSHA	IARC	ACGIH	NTP
Cement, portland, chemicals	-	-	A4	-
Crystalline Silica (Quartz) (CAS 14808-60-7)	-	1	A2	Known to be a human carcinogen.

Reproductive toxicity: There are no data available.
Teratogenicity: There are no data available.

Specific target organ toxicity (single exposure)

Name	Category	Route of Exposure	Target Organs
Calcium oxide	Category 3	Inhalation and skin contact	Respiratory tract irritation, skin irritation
Cement, portland, chemicals	Category 3	Inhalation and skin contact	Respiratory tract irritation, skin irritation

Specific target organ toxicity (repeated exposure)

Name	Category	Route of Exposure	Target Organs
Crystalline Silica (Quartz) (CAS 14808-60-7)	Category 1	Inhalation	Respiratory tract and kidneys

Aspiration hazard: There are no data available.

Information on the likely routes of exposure

Potential acute health effects:
Eye contact: Causes serious eye damage.
Inhalation: May cause respiratory irritation.
Skin contact: Causes severe burns. May cause an allergic skin reaction.
Ingestion: May cause burns to mouth, throat and stomach.

Symptoms related to the physical, chemical and toxicological characteristics:
Eye contact: Adverse symptoms may include the following: pain, watering, redness.
Inhalation: Adverse symptoms may include the following: respiratory tract irritation, coughing
Skin contact: Adverse symptoms may include the following: pain or irritation, redness, blistering may occur, skin burns, ulcerations and necrosis may occur
Ingestion: Adverse symptoms may include the following: stomach pains

Delayed and immediate effects and also chronic effects from short and long term exposure:
Short term exposure
Potential immediate effects: No known significant effects or critical hazards.
Potential delayed effects: No known significant effects or critical hazards.

Long term exposure
Potential immediate effects: No known significant effects or critical hazards.
Potential delayed effects: No known significant effects or critical hazards.

Potential chronic health effects: **General:** Repeated or prolonged inhalation of dust may lead to chronic respiratory irritation. If sensitized to hexavalent chromium, a severe allergic dermal reaction may occur when subsequently exposed to very low levels.

Carcinogenicity: Portland cement is not classifiable as a human carcinogen. Crystalline silica is considered a hazard by inhalation. IARC has classified crystalline silica as a Group 1 substance, carcinogenic to humans. This classification is based on the findings of laboratory animal studies (inhalation and implantation) and epidemiology studies that were considered sufficient for carcinogenicity. Excessive exposure to crystalline silica can cause silicosis, a non-cancerous lung disease.

Mutagenicity: No known significant effects or critical hazards.

Teratogenicity: No known significant effects or critical hazards.

Developmental effects: No known significant effects or critical hazards.

Fertility effects: No known significant effects or critical hazards.

Numerical measures of toxicity: Acute toxicity estimates: There are no data available.

Section 12. Ecological Information

Toxicity

Product/ingredient name	Result	Species	Exposure
Calcium oxide	Chronic NOEC 100 mg/L Fresh water	Fish-Oreochromis niloticus-Juvenile (Fledgling, Hatchling, Weanling)	46 days

Persistence and degradability: There are not data available.
Bioaccumulative potential: There are not data available.
Mobility in soil: Soil/water partition coefficient (Koc): Not available.
Other adverse effects: No known significant effects or critical hazards.

Section 13. Disposal considerations

Disposal methods: The generation of waste should be avoided or minimized wherever possible. Disposal of this product, solutions and any by-products should comply with the requirements of environmental protection and waste disposal legislation and any regional local authority requirements. Dispose of surplus and non-recyclable products via a licensed waste disposal contractor. Untreated waste should not be released to the sewer unless fully compliant with the requirements of all authorities with jurisdiction. Waste packaging should be recycled. Incineration or landfill should only be considered when recycling is not feasible. This material and its container must be disposed of in a safe manner. Care should be taken when handling empty containers that have not been cleaned or rinsed out. Empty containers or liners may retain some product residues. Avoid dispersal of spilled material and runoff, and contact with soil, waterways, drains and sewers.

Section 14. Transportation information

	DOT Classification	IMDG	IATA
UN number	Not regulated	Not regulated	Not regulated
UN proper shipping name	-	-	-
Transport hazard class(es)	-	-	-
Packing group	-	-	-
Environmental hazards	None	None	None
Additional information	-	-	-

Special precautions for user: Transport within user's premises: always transport in closed containers that are upright and secure. Ensure that persons transporting the product know what to do in the event of an accident or spillage.

Transport in bulk according to Annex II of MARPOL 73/78 and the IBC Code: Not available.

Section 15. Regulatory Information

TSCA 6 final risk management: Chromium, ion (Cr6+)
United States inventory (TSCA 8b): Cements are considered to be statutory mixtures under TSCA. CAS 65997-15-1 is included on the TSCA inventory.
CERCLA: This product is not listed as a CERCLA substance
Clean Air Act Section 112 (b): Hazardous Air Pollutants (HAPs) – Not listed
Clean Air Act Section 602: Class I Substances - Not listed
Clean Air Act Section 602: Class II Substances - Not listed
DEA List I Chemicals: (Precursor Chemicals) – Not listed
DEA List II Chemicals: (Essential Chemicals) – Not listed

SARA 311/312

Classification: Immediate (acute) health hazard
Delayed (chronic) health hazard

Composition/information on ingredients

Name	%	Fire Hazard	Sudden release of pressure	Reactive	Immediate (acute) health hazard	Delayed (chronic) health hazard
Calcium oxide	A-B	No	No	No	Yes	No
Quartz	>0.1	No	No	No	No	Yes
Chromium, ion (Cr6+)	<0.1	No	No	No	Yes	Yes

SARA 313

	Product name	CAS number	%
Form R-Report requirements	Chromium, ion (Cr6+)	8540-29-9	<0.1

State regulations

Massachusetts: The following components are listed: cement, portland, chemicals, limestone
New York: None of the components are listed.
New Jersey: The following components are listed: cement, portland, chemicals, gypsum, limestone
Pennsylvania: The following components are listed: cement, portland, chemicals, gypsum, limestone

California Prop. 65

WARNING: This product contains crystalline silica and chemicals (trace metals) known to the State of California to cause cancer, birth defects or other reproductive harm. California law requires the above warning in the absence of definitive testing to prove the defined risks do not exist.

Ingredient name	Cancer	Reproductive	No significant risk level	Maximum acceptable dosage level
Quartz	Yes	No	No	No
Chromium, ion (Cr6+)	Yes	Yes	0.001µg/day (inhalation)	8.2 micrograms/day (ingestion)

International regulations

International lists: **Canadian Domestic Substances List (DSL):** Portland cement is included on the DSL.
Mexico Inventory (INSQ): All components are listed or exempted.

Section 16. Other Information

Date of issue: 07/01/2018
Replaces: 06/01/2015
Revised Section(s): Section 8

Notice to reader

While the information provided in this safety data sheet is believed to provide a useful summary of the hazards of portland cement as it is commonly used, the sheet cannot anticipate and provide all of the information that might be needed in every situation. Inexperienced product users should obtain proper training before using this product. In particular, the data furnished in this sheet do not address hazards that may be posed by other materials mixed with portland cement to produce portland cement products. Users should review other relevant material safety data sheets before working with this portland cement or working on portland cement products, for example, portland cement concrete.

SELLER MAKES NO WARRANTY, EXPRESS OR IMPLIED, CONCERNING THE PRODUCT OR THE MERCHANTABILITY OR FITNESS THEREOF FOR ANY PURPOSE OR CONCERNING THE ACCURACY OF ANY INFORMATION PROVIDED BY Lehigh Hanson, except that the product shall conform to contracted specifications. The information provided herein was believed by the Lehigh Hanson to be accurate at the time of preparation or prepared from sources believed to be reliable, but it is the responsibility of the user to investigate and understand other pertinent sources of information to comply with all laws and procedures applicable to the safe handling and use of product and to determine the suitability of the product for its intended use. Buyer's exclusive remedy shall be for damages and no claim of any kind, whether as to product delivered or for non-delivery of product, and whether based on contract, breach of warranty, negligence, or otherwise shall be greater in amount than the purchase price of the quantity of product in respect of which damages are claimed. In no event shall Seller be liable for incidental or consequential damages, whether Buyer's claim is based on contract, breach of warranty, negligence or otherwise.

Abbreviations

ACGIH — American Conference of Governmental Industrial Hygienists
CAS — Chemical Abstract Service
CERCLA — Comprehensive Emergency Response and Comprehensive Liability Act
CFR — Code of Federal Regulations
DOT — Department of Transportation
GHS — Globally Harmonized System
HEPA — High Efficiency Particulate Air
IATA — International Air Transport Association
IARC — International Agency for Research on Cancer
IMDG — International Maritime Dangerous Goods
NIOSH — National Institute of Occupational Safety and Health
NOEC — No Observed Effect Concentration
NTP — National Toxicology Program
OSHA — Occupational Safety and Health Administration
PEL — Permissible Exposure Limit
REL — Recommended Exposure Limit
RQ — Reportable Quantity
SARA — Superfund Amendments and Reauthorization Act
SDS — Safety Data Sheet
TLV — Threshold Limit Value
TPQ — Threshold Planning Quantity
TSCA — Toxic Substances Control Act
TWA — Time-Weighted Average
UN — United Nations

SAFETY DATA SHEET

1. Product And Company Identification

SDS ID: SDS 380
PRODUCT: PRESTONE® RV ANTIFREEZE
PRODUCT NUMBER: AF-222, AF222-55/F
FORMULA NUMBER: YA-955, YA-967

MANUFACTURER:
Prestone Products Corporation
Danbury, CT 06810-5109

CANADIAN OFFICE:
FRAM Group (Canada), Inc.
Mississauga, Ontario L5L 3S6

MEDICAL EMERGENCIES AND ALL OTHER INFORMATION PHONE NUMBER:
(800)890-2075 (in the US)
(800)668-9349 (in Canada)
TRANSPORTATION EMERGENCY PHONE NUMBER (Chemical Spills and Transport Accidents only):
CHEMTREC 1-800-424-9300 (in the US)
CANUTEC (613)996-6666 (in Canada)
SDS DATE OF PREPARATION/REVISION: 01/12/16

PRODUCT USE: Antifreeze for water systems in recreational vehicles, boats, vacation homes and swimming pools - consumer product

2. Hazards Identification

GHS Classification: Not Hazardous

Label Elements: None Required

3. Composition/Information On Ingredients

Component	CAS No.	Amount
Water	7732-18-5	60-80%
Propylene Glycol	57-55-6	20-40%

The exact concentrations are a trade secret.

4. First Aid Measures

INHALATION: No adverse effects are expected, however, if irritation or other symptoms develop, remove to fresh air. Seek medical attention if symptoms persist.

SKIN CONTACT: Remove contaminated clothing and wash skin with soap and water. Seek medical attention if irritation develops.

EYE CONTACT: Immediately flush with water, holding open eyelids, for 15 minutes. Seek medical attention if irritation persists.

INGESTION: If large amounts are swallowed, seek medical attention. Never give anything by mouth to or induce vomiting in an unconscious or drowsy person.

MOST IMPORTANT SYMPTOMS: May cause eye irritation. Ingestion of large amounts may cause acidosis and central nervous system effects.

INDICATION OF IMMEDIATE MEDICAL ATTENTION AND SPECIAL TREATMENT, IF NEEDED: Seek immediate medical attention for large ingestions.

NOTES TO PHYSICIAN: Following acute ingestion signs of toxicity unlikely. Ethanol treatment as in ethylene glycol poisoning is inappropriate. There is no specific antidote. Treatment should be directed at the control of symptoms and the clinical condition. Monitor for acidosis and central nervous system effects.

5. Firefighting Measures

SUITABLE EXTINGUISHING MEDIA: For large fires, use alcohol type or all purpose foam. For small fires, use water spray, carbon dioxide or dry chemical.

SPECIFIC HAZARDS ARISING FROM THE CHEMICAL: A solid stream of water or foam directed into hot, burning liquid can cause frothing. Heat from fire may generate flammable vapor. Fine sprays or mists may be combustible at temperatures below the normal flash point. Burning may produce carbon monoxide and carbon dioxide.

SPECIAL PROTECTIVE EQUIPMENT AND PRECAUTIONS FOR FIRE FIGHERS: Firefighters should wear positive pressure self- contained breathing apparatus and full protective clothing for fires in areas where chemicals are used or stored. Cool exposed container with water spray or fog. Burning liquid may float on water.

6: Accidental Release Measures

PERSONAL PRECAUTIONS, PROTECTIVE EQUIPMENT AND EMERGENCY PROCEDURES: Wear appropriate protective clothing and equipment (See Section 8).

METHODS AND MATERIALS FOR CONTAINMENT/CLEANUP: Collect with absorbent material and place in appropriate, labeled container for disposal or, if permitted flush spill area with water.

7. Handling and Storage

PRECAUTIONS FOR SAFE HANDLING:
Avoid eye and prolonged or repeated skin contact.
Avoid breathing vapors or mists.
Wash exposed skin thoroughly with soap and water after use.
Keep container away from open flames and excessive heat.
Do not reuse empty containers unless properly cleaned.
Empty containers retain product residue and may be dangerous. Do not cut, weld, drill, etc. containers, even empty.

Sudden release of hot organic chemical vapors or mists from process equipment operating at elevated temperature and pressure, or sudden ingress of air into vacuum equipment, may result in ignitions without any obvious ignition sources. Published "auto ignition" or "ignition" temperatures cannot be treated as safe operating temperatures in chemical processes without analysis of the actual process conditions. Use of this product in elevated temperature applications should be thoroughly evaluated to assure safe operating conditions.

CONDITIONS FOR SAFE STORAGE, INCLUDING ANY INCOMPATIBILITIES:
NFPA CLASSIFICATION: Not applicable

8. Exposure Controls / Personal Protection

EXPOSURE GUIDELINES

CHEMICAL	EXPOSURE LIMIT
Water	None Established
Propylene Glycol	10 mg/m^3 TWA AIHA WEEL

APPROPRIATE ENGINEERING CONTROLS: Use general ventilation or local exhaust as required to minimize exposures.

PERSONAL PROTECTIVE EQUIPMENT

RESPIRATORY PROTECTION: None normally needed.

GLOVES: None normally needed. For prolonged contact rubber or neoprene gloves can be worn.

EYE PROTECTION: Safety glasses or goggles recommended if splashing is possible.

OTHER PROTECTIVE EQUIPMENT/CLOTHING: Appropriate protective clothing as needed to minimize skin contact.

9. Physical and Chemical Properties

APPEARANCE:	Red-orange liquid	ODOR:	Characteristic odor
ODOR THRESHOLD:	Not determined	pH:	9.2
MELTING/FREEZING POINT:	6-13°F ((-14.4)-(-10.6°C))	BOILING POINT/RANGE:	214-218°F (101.1-103.3°C)
FLASH POINT:	>215°F (>101.6°C) Seta CC	EVAPORATION RATE:	Not determined
FLAMMABILITY (SOLID, GAS)	Not Applicable	FLAMMABILITY LIMITS:	LEL: 2.6% (propylene glycol) UEL: 12.5% (propylene glycol)
VAPOR PRESSURE:	0.075 mmHg @ 20°C	VAPOR DENSITY:	Greater than 1
RELATIVE DENSITY:	1.01-1.03	SOLUBILITIES	Water: Complete
PARTITION COEFFICIENT (n-octanol/water)	Not determined	AUTOIGNITION TEMPERATURE:	Not determined
DECOMPOSITION TEMPERATURE:	Not determined	VISCOSITY:	Not determined

10. Stability and Reactivity

REACTIVITY: Normally uncreative.

CHEMICAL STABILITY: Stable.

POSSIBILITY OF HAZARDOUS REACTIONS: Reactions with strong acids, strong oxidizing agents, and materials reactive with hydroxyl compounds will generate heat.

CONDITIONS TO AVOID: None known.

INCOMPATIBLE MATERIALS: Strong acids, strong oxidizing agents, and materials reactive with hydroxyl compounds.

HAZARDOUS DECOMPOSITION PRODUCTS: Carbon monoxide, carbon dioxide.

11. Toxicological Information

POTENTIAL HEALTH EFFECTS:

ACUTE HAZARDS:

INHALATION: No significant adverse health effects are expected from inhalation exposure.

SKIN CONTACT: No significant irritation is expected. Not expected to be absorbed through the skin

EYE CONTACT: Direct contact may cause stinging and tearing but no residual injury or discomfort.

INGESTION: Considered relatively non-toxic following acute ingestion, however, lactic acidosis, stupor and seizures have been reported following chronic ingestion and in individuals with underlying kidney disease.

CHRONIC EFFECTS: None currently known.

CARCINOGENICITY LISTING: None of the components of this product are listed as a carcinogen or suspected carcinogen by IARC, NTP, ACGIH, or OSHA.

ACUTE TOXICITY VALUES:
Propylene Glycol: LD50 Oral Rat: 20,000 mg/kg
LD50 Skin Rabbit: 20,800 mg/kg

SIGNIFICANT LABORATORY DATA WITH POSSIBLE RELEVANCE TO HUMAN HEALTH: This product contains less than 0.2% tolyltriazole which has demonstrated mutagenic activity in a bacterial test system. A correlation has been established between mutagenic activity and carcinogenic activity for many chemicals. Tolyltriazole has not been identified as a carcinogen or probable carcinogen by NTP, IARC, ACGIH, or OSHA.

12. Ecological Information

ECOTOXICITY:
Propylene Glycol: LC50: Daphnia magna, 43,500 mg/L/ 48 hr; LC50: Pimephales promelas, 46,500 mg/L/ 96 hr

PERSISTENCE AND DEGRADABILITY: Propylene glycol achieved 64% of its theoretical BOD using a sewage inoculum and a 5 day incubation period

BIOACCUMULATIVE POTENTIAL: Propylene Glycol has an estimated BCF of 3 suggests the potential for bioconcentration in aquatic organisms is low.

MOBILITY IN SOIL: Propylene Glycol is expected to have very high mobility in soil.

OTHER ADVERSE EFFECTS: None known

13. Disposal Considerations

Dispose of product in accordance with all local, state/provincial and federal regulations.

14. Transport Information

U.S. DOT HAZARD CLASSIFICATION: Not Regulated

DOT MARINE POLLUTANTS: This product does not contain Marine Pollutants as defined in 49 CFR 171.8.

IMDG CODE SHIPPING CLASSIFICATION: Not Regulated

15. Regulatory Information

EPA SARA 311/312 HAZARD CLASSIFICATION: Not hazardous

EPA SARA 313: This Product Contains the Following Chemicals Subject to Annual Release Reporting Requirements under SARA Title III, Section 313 (40 CFR 372): None

PROTECTION OF STRATOSPHERIC OZONE: This product is not known to contain or to have been manufactured with ozone depleting substances as defined in 40 CFR Part 82, Appendix A to Subpart A.

CERCLA SECTION 103: This product is not subject to CERCLA reporting requirements; however, many states have more stringent release reporting requirements. Report spills required under federal, state and local regulations.

CALIFORNIA PROPOSITION 65: This product does not contain substances known to the State of California to cause Cancer and/or Reproductive Harm.

EPA TSCA INVENTORY: All of the components of this material are listed on the Toxic Substances Control Act (TSCA) Chemical Substances Inventory.

EUROPEAN INVENTORY OF EXISTING COMMERCIAL CHEMICAL SUBSTANCES (EINECS): All of the ingredients are listed on the EINECS inventory.

KOREA: All of the ingredients of this product are listed on the Korean Existing Chemicals List (KECL).

CHINA. All of the ingredients of this product are listed on the Inventory of Existing Chemical Substances in China (IECSC).

16. Other Information

NFPA Rating: Fire: 1 Health: 1 Reactivity: 0

REVISION SUMMARY: Section 1: Product Number

SDS Date of Preparation/Revision: June 25, 2013

This SDS is directed to professional users and bulk handlers of the product. Consumer products are labeled in accordance with Federal Hazardous Substances Act regulations.

While Prestone Products Corporation believes that the data contained herein are factual and the opinions expressed are those of qualified experts regarding the results of tests conducted, the data are not to be taken as a warranty or representation for which Prestone Products Corporation assumes legal responsibility. They are offered for your consideration, investigation and verification. Any use of these data and information must be determined by the user to be in accordance with applicable federal, state and local laws and regulations.

If more information is needed, please contact:
Prestone Products Corporation
69 Eagle Road
Danbury, CT 06810
(800) 890-2075

SAFETY DATA SHEET

1. Identification

Product identifier **PVC Regular Clear Cement**

Other means of identification

Product code 1100E

Synonyms Part Numbers: 31012, 31013, 31014, 31015, 31016, 31958, 31959, 31960, 31961

Recommended use Joining PVC Pipes

Recommended restrictions None known.

Manufacturer/Importer/Supplier/Distributor information

Company Name Oatey Co.

Address 4700 West 160th St.
Cleveland, OH 44135

Telephone 216-267-7100

E-mail info@oatey.com

Transport Emergency Chemtrec 1-800-424-9300 (Outside the US 1-703-527-3887)

Emergency First Aid 1-877-740-5015

Contact person MSDS Coordinator

2. Hazard(s) identification

Physical hazards	Flammable liquids	Category 2
Health hazards	Acute toxicity, oral	Category 4
	Skin corrosion/irritation	Category 2
	Serious eye damage/eye irritation	Category 2A
	Specific target organ toxicity, single exposure	Category 3 respiratory tract irritation
	Specific target organ toxicity, single exposure	Category 3 narcotic effects
	Aspiration hazard	Category 1

OSHA defined hazards Not classified.

Label elements



Signal word Danger

Hazard statement Highly flammable liquid and vapor. Harmful if swallowed. May be fatal if swallowed and enters airways. Causes skin irritation. Causes serious eye irritation. May cause respiratory irritation. May cause drowsiness or dizziness.

Precautionary statement

Prevention Keep away from heat/sparks/open flames/hot surfaces. - No smoking. Keep container tightly closed. Ground/bond container and receiving equipment. Use explosion-proof electrical/ventilating/lighting equipment. Use only non-sparking tools. Take precautionary measures against static discharge. Avoid breathing mist or vapor. Wash thoroughly after handling. Do not eat, drink or smoke when using this product. Use only outdoors or in a well-ventilated area. Wear protective gloves/protective clothing/eye protection/face protection.

Response If swallowed: Immediately call a poison center/doctor. If on skin (or hair): Take off immediately all contaminated clothing. Rinse skin with water/shower. If inhaled: Remove person to fresh air and keep comfortable for breathing. If in eyes: Rinse cautiously with water for several minutes. Remove contact lenses, if present and easy to do. Continue rinsing. Call a poison center/doctor if you feel unwell. Rinse mouth. Do NOT induce vomiting. If skin irritation occurs: Get medical advice/attention. If eye irritation persists: Get medical advice/attention. Take off contaminated clothing and wash before reuse. In case of fire: Use appropriate media to extinguish.

Storage	Store in a well-ventilated place. Keep container tightly closed. Keep cool. Store locked up.
Disposal	Dispose of contents/container in accordance with local/regional/national/international regulations.
Hazard(s) not otherwise classified (HNOC)	Frequent or prolonged contact may defat and dry the skin, leading to discomfort and dermatitis. May form explosive peroxides. Contains a chemical classified by the US EPA as a suspected possible carcinogen.

Supplemental information

Not applicable.

3. Composition/information on ingredients

Mixtures

Chemical name	CAS number	%
Methyl ethyl ketone	78-93-3	25-40
Cyclohexanone	108-94-1	10-25
Furan, Tetrahydro-	109-99-9	10-25
Acetone	67-64-1	5-15
Polyvinyl chloride	9002-86-2	5-15

*Designates that a specific chemical identity and/or percentage of composition has been withheld as a trade secret.

4. First-aid measures

Inhalation	Remove victim to fresh air and keep at rest in a position comfortable for breathing. Call a POISON CENTER or doctor/physician if you feel unwell.
Skin contact	Take off immediately all contaminated clothing. Wash with plenty of soap and water. If skin irritation occurs: Get medical advice/attention.
Eye contact	Immediately flush eyes with plenty of water for at least 15 minutes. Remove contact lenses, if present and easy to do. Continue rinsing. If eye irritation persists: Get medical advice/attention.
Ingestion	Call a physician or poison control center immediately. Do not induce vomiting. If vomiting occurs, keep head low so that stomach content doesn't get into the lungs. Aspiration may cause pulmonary edema and pneumonitis.
Most important symptoms/effects, acute and delayed	Irritation of nose and throat. Aspiration may cause pulmonary edema and pneumonitis. Severe eye irritation. Symptoms may include stinging, tearing, redness, swelling, and blurred vision. May cause respiratory irritation. Vapors have a narcotic effect and may cause headache, fatigue, dizziness and nausea. Skin irritation. May cause redness and pain.
Indication of immediate medical attention and special treatment needed	Provide general supportive measures and treat symptomatically. Thermal burns: Flush with water immediately. While flushing, remove clothes which do not adhere to affected area. Call an ambulance. Continue flushing during transport to hospital. In case of shortness of breath, give oxygen. Keep victim warm. Keep victim under observation. Symptoms may be delayed.
General information	Take off all contaminated clothing immediately. Ensure that medical personnel are aware of the material(s) involved, and take precautions to protect themselves. Wash contaminated clothing before reuse.

5. Fire-fighting measures

Suitable extinguishing media	Alcohol resistant foam. Water fog. Dry chemical powder. Carbon dioxide (CO2).
Unsuitable extinguishing media	Do not use water jet as an extinguisher, as this will spread the fire.
Specific hazards arising from the chemical	Vapors may form explosive mixtures with air. Vapors may travel considerable distance to a source of ignition and flash back. During fire, gases hazardous to health may be formed.
Special protective equipment and precautions for firefighters	Self-contained breathing apparatus and full protective clothing must be worn in case of fire.
Fire fighting equipment/instructions	In case of fire and/or explosion do not breathe fumes. Move containers from fire area if you can do so without risk.
Specific methods	Use standard firefighting procedures and consider the hazards of other involved materials.
General fire hazards	Highly flammable liquid and vapor. This product contains tetrahydrofuran that may form explosive organic peroxide when exposed to air or light or with age.

6. Accidental release measures

Personal precautions, protective equipment and emergency procedures

Keep unnecessary personnel away. Keep people away from and upwind of spill/leak. Keep out of low areas. Eliminate all ignition sources (no smoking, flares, sparks, or flames in immediate area). Wear appropriate protective equipment and clothing during clean-up. Avoid breathing mist or vapor. Do not touch damaged containers or spilled material unless wearing appropriate protective clothing. Ventilate closed spaces before entering them. Local authorities should be advised if significant spillages cannot be contained. For personal protection, see section 8 of the SDS.

Methods and materials for containment and cleaning up

Eliminate all ignition sources (no smoking, flares, sparks, or flames in immediate area). Take precautionary measures against static discharge. Use only non-sparking tools. Keep combustibles (wood, paper, oil, etc.) away from spilled material. This product is miscible in water.

Large Spills: Stop the flow of material, if this is without risk. Use water spray to reduce vapors or divert vapor cloud drift. Dike the spilled material, where this is possible. Cover with plastic sheet to prevent spreading. Use a non-combustible material like vermiculite, sand or earth to soak up the product and place into a container for later disposal. Prevent entry into waterways, sewer, basements or confined areas. Following product recovery, flush area with water.

Small Spills: Absorb with earth, sand or other non-combustible material and transfer to containers for later disposal. Wipe up with absorbent material (e.g. cloth, fleece). Clean surface thoroughly to remove residual contamination.

Never return spills to original containers for re-use. For waste disposal, see section 13 of the SDS.

Environmental precautions

Avoid discharge into drains, water courses or onto the ground.

7. Handling and storage

Precautions for safe handling

Vapors may form explosive mixtures with air. Do not handle, store or open near an open flame, sources of heat or sources of ignition. Protect material from direct sunlight. Explosion-proof general and local exhaust ventilation. Take precautionary measures against static discharges. All equipment used when handling the product must be grounded. Use non-sparking tools and explosion-proof equipment. Avoid breathing mist or vapor. Avoid contact with eyes, skin, and clothing. Avoid prolonged exposure. Do not taste or swallow. When using, do not eat, drink or smoke. Wear appropriate personal protective equipment. Wash hands thoroughly after handling. Observe good industrial hygiene practices.

Conditions for safe storage, including any incompatibilities

Store locked up. Keep away from heat, sparks and open flame. Prevent electrostatic charge build-up by using common bonding and grounding techniques. Store in a cool, dry place out of direct sunlight. Store in original tightly closed container. Store in a well-ventilated place. Store away from incompatible materials (see Section 10 of the SDS).

8. Exposure controls/personal protection

Occupational exposure limits

US. OSHA Specifically Regulated Substances (29 CFR 1910.1001-1050)

Components	Type	Value
Polyvinyl chloride (CAS 9002-86-2)	STEL	5 ppm
	TWA	1 ppm

US. OSHA Table Z-1 Limits for Air Contaminants (29 CFR 1910.1000)

Components	Type	Value	Form
Acetone (CAS 67-64-1)	PEL	2400 mg/m3	
		1000 ppm	
Cyclohexanone (CAS 108-94-1)	PEL	200 mg/m3	
		50 ppm	
Furan, Tetrahydro- (CAS 109-99-9)	PEL	590 mg/m3	
		200 ppm	
Methyl ethyl ketone (CAS 78-93-3)	PEL	590 mg/m3	
		200 ppm	
Polyvinyl chloride (CAS 9002-86-2)	PEL	5 mg/m3	Respirable fraction.
		15 mg/m3	Total dust.

US. ACGIH Threshold Limit Values

Components	Type	Value	Form
Acetone (CAS 67-64-1)	STEL	750 ppm	
	TWA	500 ppm	
Cyclohexanone (CAS 108-94-1)	STEL	50 ppm	
	TWA	20 ppm	
Furan, Tetrahydro- (CAS 109-99-9)	STEL	100 ppm	
	TWA	50 ppm	
Methyl ethyl ketone (CAS 78-93-3)	STEL	300 ppm	
	TWA	200 ppm	
Polyvinyl chloride (CAS 9002-86-2)	TWA	1 mg/m3	Respirable fraction.

US. NIOSH: Pocket Guide to Chemical Hazards

Components	Type	Value
Acetone (CAS 67-64-1)	TWA	590 mg/m3
		250 ppm
Cyclohexanone (CAS 108-94-1)	TWA	100 mg/m3
		25 ppm
Furan, Tetrahydro- (CAS 109-99-9)	STEL	735 mg/m3
		250 ppm
	TWA	590 mg/m3
		200 ppm
Methyl ethyl ketone (CAS 78-93-3)	STEL	885 mg/m3
		300 ppm
	TWA	590 mg/m3
		200 ppm

Biological limit values

ACGIH Biological Exposure Indices

Components	Value	Determinant	Specimen	Sampling Time
Acetone (CAS 67-64-1)	50 mg/l	Acetone	Urine	*
Cyclohexanone (CAS 108-94-1)	80 mg/l	1,2-Cyclohexanediol, with hydrolysis	Urine	*
	8 mg/l	Cyclohexanol, with hydrolysis	Urine	*
Furan, Tetrahydro- (CAS 109-99-9)	2 mg/l	Tetrahydrofuran	Urine	*
Methyl ethyl ketone (CAS 78-93-3)	2 mg/l	MEK	Urine	*

* - For sampling details, please see the source document.

Exposure guidelines

US - California OELs: Skin designation

Cyclohexanone (CAS 108-94-1) Can be absorbed through the skin.

US - Minnesota Haz Subs: Skin designation applies

Cyclohexanone (CAS 108-94-1) Skin designation applies.

US - Tennessee OELs: Skin designation

Cyclohexanone (CAS 108-94-1) Can be absorbed through the skin.

US ACGIH Threshold Limit Values: Skin designation

Cyclohexanone (CAS 108-94-1) Can be absorbed through the skin.
Furan, Tetrahydro- (CAS 109-99-9) Can be absorbed through the skin.

US. NIOSH: Pocket Guide to Chemical Hazards

Cyclohexanone (CAS 108-94-1) Can be absorbed through the skin.

Appropriate engineering controls	Explosion-proof general and local exhaust ventilation. Good general ventilation (typically 10 air changes per hour) should be used. Ventilation rates should be matched to conditions. If applicable, use process enclosures, local exhaust ventilation, or other engineering controls to maintain airborne levels below recommended exposure limits. If exposure limits have not been established, maintain airborne levels to an acceptable level. Eye wash facilities and emergency shower must be available when handling this product.

Individual protection measures, such as personal protective equipment

Eye/face protection	Face shield is recommended. Wear safety glasses with side shields (or goggles).
Skin protection	
Hand protection	Wear appropriate chemical resistant gloves.
Other	Wear appropriate chemical resistant clothing.
Respiratory protection	If engineering controls do not maintain airborne concentrations below recommended exposure limits (where applicable) or to an acceptable level (in countries where exposure limits have not been established), an approved respirator must be worn.
Thermal hazards	Wear appropriate thermal protective clothing, when necessary.
General hygiene considerations	When using, do not eat, drink or smoke. Always observe good personal hygiene measures, such as washing after handling the material and before eating, drinking, and/or smoking. Routinely wash work clothing and protective equipment to remove contaminants.

9. Physical and chemical properties

Appearance

Physical state	Liquid.
Form	Translucent liquid.
Color	Clear.
Odor	Solvent.
Odor threshold	Not available.
pH	Not available.
Melting point/freezing point	Not available.
Initial boiling point and boiling range	151 °F (66.11 °C)
Flash point	-4.0 °F (-20.0 °C)
Evaporation rate	5.5 - 8
Flammability (solid, gas)	Not available.

Upper/lower flammability or explosive limits

Flammability limit - lower (%)	1.8
Flammability limit - upper (%)	11.8
Explosive limit - lower (%)	Not available.
Explosive limit - upper (%)	Not available.
Vapor pressure	145 mm Hg @ 20 C
Vapor density	2.5
Relative density	0.9 +/- 0.02

Solubility(ies)

Solubility (water)	Negligible
Partition coefficient (n-octanol/water)	Not available.
Auto-ignition temperature	Not available.
Decomposition temperature	Not available.
Viscosity	80 - 500 cP

Other information

VOC (Weight %)	488 g/l SCAQMD 1168/M316A

10. Stability and reactivity

Reactivity	The product is stable and non-reactive under normal conditions of use, storage and transport.

Chemical stability	Material is stable under normal conditions.
Possibility of hazardous reactions	No dangerous reaction known under conditions of normal use.
Conditions to avoid	Avoid heat, sparks, open flames and other ignition sources. Avoid temperatures exceeding the flash point. Contact with incompatible materials.
Incompatible materials	Acids. Strong oxidizing agents. Ammonia. Amines. Isocyanates. Caustics.
Hazardous decomposition products	No hazardous decomposition products are known.

11. Toxicological information

Information on likely routes of exposure

Inhalation	May be fatal if swallowed and enters airways. Headache. Nausea, vomiting. May cause irritation to the respiratory system. Vapors have a narcotic effect and may cause headache, fatigue, dizziness and nausea. Prolonged inhalation may be harmful.
Skin contact	Causes skin irritation.
Eye contact	Causes serious eye irritation.
Ingestion	May be fatal if swallowed and enters airways. Harmful if swallowed. Harmful if swallowed. Droplets of the product aspirated into the lungs through ingestion or vomiting may cause a serious chemical pneumonia.
Symptoms related to the physical, chemical and toxicological characteristics	Irritation of nose and throat. Aspiration may cause pulmonary edema and pneumonitis. Severe eye irritation. Symptoms may include stinging, tearing, redness, swelling, and blurred vision. May cause respiratory irritation. Skin irritation. May cause redness and pain. Symptoms of overexposure may be headache, dizziness, tiredness, nausea and vomiting.

Information on toxicological effects

Acute toxicity May be fatal if swallowed and enters airways. Narcotic effects. May cause respiratory irritation.

Components	Species	Test Results
Acetone (CAS 67-64-1)		
Acute		
Dermal		
LD50	Rabbit	20 ml/kg
Inhalation		
LC50	Rat	50 mg/l, 8 Hours
Oral		
LD50	Rat	5800 mg/kg
Cyclohexanone (CAS 108-94-1)		
Acute		
Dermal		
LD50	Rabbit	948 mg/kg
Inhalation		
LC50	Rat	8000 ppm, 4 hours
Oral		
LD50	Rat	1540 mg/kg

* Estimates for product may be based on additional component data not shown.

Skin corrosion/irritation	Causes skin irritation.
Serious eye damage/eye irritation	Causes serious eye irritation.

Respiratory or skin sensitization

Respiratory sensitization	Not available.
Skin sensitization	This product is not expected to cause skin sensitization.
Germ cell mutagenicity	No data available to indicate product or any components present at greater than 0.1% are mutagenic or genotoxic.

Carcinogenicity In 2012 USEPA Integrated Risk Information System (IRIS) reviewed a two species inhalation lifetime study on THF conducted by NTP (1998). Male rats developed renal tumors and female mice developed liver tumors while neither the female rats nor the male mice showed similar results. Because the carcinogenic mechanisms could not be identified clearly in either species for either tumor, the EPA determined that the male rat and female mouse findings are relevant to the assessment of carcinogenic potential in humans. Therefore, the IRIS review concludes that these data in aggregate indicate that there is "suggestive evidence of carcinogenic potential" following exposure to THF by all routes of exposure.

IARC Monographs. Overall Evaluation of Carcinogenicity

Cyclohexanone (CAS 108-94-1)	3 Not classifiable as to carcinogenicity to humans.
Polyvinyl chloride (CAS 9002-86-2)	3 Not classifiable as to carcinogenicity to humans.

OSHA Specifically Regulated Substances (29 CFR 1910.1001-1050)

Polyvinyl chloride (CAS 9002-86-2)	Cancer

Reproductive toxicity This product is not expected to cause reproductive or developmental effects.

Specific target organ toxicity - single exposure Narcotic effects. May cause drowsiness and dizziness. Respiratory tract irritation.

Specific target organ toxicity - repeated exposure Not classified.

Aspiration hazard May be fatal if swallowed and enters airways.

Chronic effects Prolonged inhalation may be harmful.

12. Ecological information

Ecotoxicity The product is not classified as environmentally hazardous. However, this does not exclude the possibility that large or frequent spills can have a harmful or damaging effect on the environment.

Components		Species	Test Results
Acetone (CAS 67-64-1)			
Aquatic			
Fish	LC50	Fathead minnow (Pimephales promelas)	> 100 mg/l, 96 hours
Cyclohexanone (CAS 108-94-1)			
Aquatic			
Fish	LC50	Fathead minnow (Pimephales promelas)	481 - 578 mg/l, 96 hours

* Estimates for product may be based on additional component data not shown.

Persistence and degradability No data is available on the degradability of this product.

Bioaccumulative potential No data available.

Partition coefficient n-octanol / water (log Kow)

Acetone (CAS 67-64-1)	-0.24
Cyclohexanone (CAS 108-94-1)	0.81
Furan, Tetrahydro- (CAS 109-99-9)	0.46
Methyl ethyl ketone (CAS 78-93-3)	0.29

Mobility in soil No data available.

Other adverse effects No other adverse environmental effects (e.g. ozone depletion, photochemical ozone creation potential, endocrine disruption, global warming potential) are expected from this component.

13. Disposal considerations

Disposal instructions Collect and reclaim or dispose in sealed containers at licensed waste disposal site. This material and its container must be disposed of as hazardous waste. Do not allow this material to drain into sewers/water supplies. Do not contaminate ponds, waterways or ditches with chemical or used container. Dispose of contents/container in accordance with local/regional/national/international regulations.

Local disposal regulations Dispose in accordance with all applicable regulations.

Hazardous waste code The waste code should be assigned in discussion between the user, the producer and the waste disposal company.

Waste from residues / unused products Dispose of in accordance with local regulations. Empty containers or liners may retain some product residues. This material and its container must be disposed of in a safe manner (see: Disposal instructions).

Contaminated packaging Empty containers should be taken to an approved waste handling site for recycling or disposal. Since emptied containers may retain product residue, follow label warnings even after container is emptied.

14. Transport information

DOT

UN number	UN1993
UN proper shipping name	Flammable liquids, n.o.s. (Methyl ethyl ketone RQ = 12788 LBS, Acetone RQ = 50505 LBS)
Transport hazard class(es)	
Class	3
Subsidiary risk	-
Label(s)	3
Packing group	II
Special precautions for user	Read safety instructions, SDS and emergency procedures before handling.
Special provisions	IB2, T7, TP1, TP8, TP28
Packaging exceptions	150
Packaging non bulk	202
Packaging bulk	242

IATA

UN number	UN1993
UN proper shipping name	Flammable liquid, n.o.s. (Methyl ethyl ketone, Acetone)
Transport hazard class(es)	
Class	3
Subsidiary risk	-
Packing group	II
Environmental hazards	No.
ERG Code	3H
Special precautions for user	Read safety instructions, SDS and emergency procedures before handling.

IMDG

UN number	UN1993
UN proper shipping name	FLAMMABLE LIQUID, N.O.S. (Methyl ethyl ketone, Acetone)
Transport hazard class(es)	
Class	3
Subsidiary risk	-
Packing group	II
Environmental hazards	
Marine pollutant	No.
EmS	F-E, S-E
Special precautions for user	Read safety instructions, SDS and emergency procedures before handling.

Transport in bulk according to Annex II of MARPOL 73/78 and the IBC Code Not available.

15. Regulatory information

US federal regulations This product is a "Hazardous Chemical" as defined by the OSHA Hazard Communication Standard, 29 CFR 1910.1200.
All components are on the U.S. EPA TSCA Inventory List.

TSCA Section 12(b) Export Notification (40 CFR 707, Subpt. D)

Not regulated.

OSHA Specifically Regulated Substances (29 CFR 1910.1001-1050)

Polyvinyl chloride (CAS 9002-86-2)	Cancer Central nervous system Liver Blood Flammability

CERCLA Hazardous Substance List (40 CFR 302.4)

Acetone (CAS 67-64-1)	LISTED
Cyclohexanone (CAS 108-94-1)	LISTED
Furan, Tetrahydro- (CAS 109-99-9)	LISTED
Methyl ethyl ketone (CAS 78-93-3)	LISTED

Superfund Amendments and Reauthorization Act of 1986 (SARA)

Hazard categories
Immediate Hazard - Yes
Delayed Hazard - No
Fire Hazard - Yes
Pressure Hazard - No
Reactivity Hazard - No

SARA 302 Extremely hazardous substance

Not listed.

SARA 311/312 Hazardous chemical No

SARA 313 (TRI reporting)

Not regulated.

Other federal regulations

Clean Air Act (CAA) Section 112 Hazardous Air Pollutants (HAPs) List

Not regulated.

Clean Air Act (CAA) Section 112(r) Accidental Release Prevention (40 CFR 68.130)

Not regulated.

Safe Drinking Water Act (SDWA) Not regulated.

Drug Enforcement Administration (DEA). List 2, Essential Chemicals (21 CFR 1310.02(b) and 1310.04(f)(2) and Chemical Code Number

Acetone (CAS 67-64-1)	6532
Methyl ethyl ketone (CAS 78-93-3)	6714

Drug Enforcement Administration (DEA). List 1 & 2 Exempt Chemical Mixtures (21 CFR 1310.12(c))

Acetone (CAS 67-64-1)	35 %WV
Methyl ethyl ketone (CAS 78-93-3)	35 %WV

DEA Exempt Chemical Mixtures Code Number

Acetone (CAS 67-64-1)	6532
Methyl ethyl ketone (CAS 78-93-3)	6714

US state regulations

US. Massachusetts RTK - Substance List

Acetone (CAS 67-64-1)
Cyclohexanone (CAS 108-94-1)
Furan, Tetrahydro- (CAS 109-99-9)
Methyl ethyl ketone (CAS 78-93-3)

US. New Jersey Worker and Community Right-to-Know Act

Acetone (CAS 67-64-1)
Cyclohexanone (CAS 108-94-1)
Furan, Tetrahydro- (CAS 109-99-9)
Methyl ethyl ketone (CAS 78-93-3)
Polyvinyl chloride (CAS 9002-86-2)

US. Pennsylvania Worker and Community Right-to-Know Law

Acetone (CAS 67-64-1)
Cyclohexanone (CAS 108-94-1)
Furan, Tetrahydro- (CAS 109-99-9)
Methyl ethyl ketone (CAS 78-93-3)

US. Rhode Island RTK

Acetone (CAS 67-64-1)
Cyclohexanone (CAS 108-94-1)
Furan, Tetrahydro- (CAS 109-99-9)
Methyl ethyl ketone (CAS 78-93-3)

US. California Proposition 65

California Safe Drinking Water and Toxic Enforcement Act of 1986 (Proposition 65): This material is not known to contain any chemicals currently listed as carcinogens or reproductive toxins.

International Inventories

Country(s) or region	Inventory name	On inventory (yes/no)*
Canada	Domestic Substances List (DSL)	Yes

Country(s) or region	Inventory name	On inventory (yes/no)*
United States & Puerto Rico	Toxic Substances Control Act (TSCA) Inventory	No

*A "Yes" indicates this product complies with the inventory requirements administered by the governing country(s).
A "No" indicates that one or more components of the product are not listed or exempt from listing on the inventory administered by the governing country(s).

16. Other information, including date of preparation or last revision

Issue date 05-27-2015

Revision date -

Version # 01

HMIS® ratings
Health: 2
Flammability: 3
Physical hazard: 0

NFPA ratings



Disclaimer The information in the sheet was written based on the best knowledge and experience currently available. Oatey Co. cannot anticipate all conditions under which this information and its product, or the products of other manufacturers in combination with its product, may be used. It is the user's responsibility to ensure safe conditions for handling, storage and disposal of the product, and to assume liability for loss, injury, damage or expense due to improper use.

SAFETY DATA SHEET

1. Identification

Product identifier **Oatey Purple Primer- NSF Listed for PVC and CPVC**

Other means of identification

Product code 1402E

Synonyms Part Numbers: 30755(TV), 30756(TV), 30757(TV), 30758, 30759, 30927

Recommended use Joining PVC Pipes

Recommended restrictions None known.

Manufacturer/Importer/Supplier/Distributor information

Company Name Oatey Co.

Address 4700 West 160th St.
Cleveland, OH 44135

Telephone 216-267-7100

E-mail info@oatey.com

Transport Emergency Chemtrec 1-800-424-9300 (Outside the US 1-703-527-3887)

Emergency First Aid 1-877-740-5015

Contact person MSDS Coordinator

2. Hazard(s) identification

Physical hazards	Flammable liquids	Category 2
Health hazards	Acute toxicity, oral	Category 4
	Skin corrosion/irritation	Category 2
	Serious eye damage/eye irritation	Category 2A
	Specific target organ toxicity, single exposure	Category 3 respiratory tract irritation
	Specific target organ toxicity, single exposure	Category 3 narcotic effects
	Aspiration hazard	Category 1

OSHA defined hazards Not classified.

Label elements



Signal word Danger

Hazard statement Highly flammable liquid and vapor. Harmful if swallowed. May be fatal if swallowed and enters airways. Causes skin irritation. Causes serious eye irritation. May cause respiratory irritation. May cause drowsiness or dizziness.

Precautionary statement

Prevention Keep away from heat/sparks/open flames/hot surfaces. - No smoking. Keep container tightly closed. Ground/bond container and receiving equipment. Use explosion-proof electrical/ventilating/lighting equipment. Use only non-sparking tools. Take precautionary measures against static discharge. Avoid breathing mist or vapor. Wash thoroughly after handling. Do not eat, drink or smoke when using this product. Use only outdoors or in a well-ventilated area. Wear protective gloves/protective clothing/eye protection/face protection.

Response If swallowed: Immediately call a poison center/doctor. If on skin (or hair): Take off immediately all contaminated clothing. Rinse skin with water/shower. If inhaled: Remove person to fresh air and keep comfortable for breathing. If in eyes: Rinse cautiously with water for several minutes. Remove contact lenses, if present and easy to do. Continue rinsing. Call a poison center/doctor if you feel unwell. Rinse mouth. Do NOT induce vomiting. If skin irritation occurs: Get medical advice/attention. If eye irritation persists: Get medical advice/attention. Take off contaminated clothing and wash before reuse. In case of fire: Use appropriate media to extinguish.

Storage	Store in a well-ventilated place. Keep container tightly closed. Keep cool. Store locked up.
Disposal	Dispose of contents/container in accordance with local/regional/national/international regulations.
Hazard(s) not otherwise classified (HNOC)	Frequent or prolonged contact may defat and dry the skin, leading to discomfort and dermatitis. May form explosive peroxides. Contains a chemical classified by the US EPA as a suspected possible carcinogen.

Supplemental information

Not applicable.

3. Composition/information on ingredients

Mixtures

Chemical name	CAS number	%
Acetone	67-64-1	25-40
Cyclohexanone	108-94-1	25-40
Furan, Tetrahydro-	109-99-9	15-30
Methyl ethyl ketone	78-93-3	15-30

*Designates that a specific chemical identity and/or percentage of composition has been withheld as a trade secret.

4. First-aid measures

Inhalation	Remove victim to fresh air and keep at rest in a position comfortable for breathing. Call a POISON CENTER or doctor/physician if you feel unwell.
Skin contact	Take off immediately all contaminated clothing. Wash with plenty of soap and water. If skin irritation occurs: Get medical advice/attention.
Eye contact	Immediately flush eyes with plenty of water for at least 15 minutes. Remove contact lenses, if present and easy to do. Continue rinsing. If eye irritation persists: Get medical advice/attention.
Ingestion	Call a physician or poison control center immediately. Do not induce vomiting. If vomiting occurs, keep head low so that stomach content doesn't get into the lungs. Aspiration may cause pulmonary edema and pneumonitis.
Most important symptoms/effects, acute and delayed	Irritation of nose and throat. Aspiration may cause pulmonary edema and pneumonitis. Severe eye irritation. Symptoms may include stinging, tearing, redness, swelling, and blurred vision. May cause respiratory irritation. Vapors have a narcotic effect and may cause headache, fatigue, dizziness and nausea. Skin irritation. May cause redness and pain.
Indication of immediate medical attention and special treatment needed	Provide general supportive measures and treat symptomatically. Thermal burns: Flush with water immediately. While flushing, remove clothes which do not adhere to affected area. Call an ambulance. Continue flushing during transport to hospital. In case of shortness of breath, give oxygen. Keep victim warm. Keep victim under observation. Symptoms may be delayed.
General information	Take off all contaminated clothing immediately. Ensure that medical personnel are aware of the material(s) involved, and take precautions to protect themselves. Wash contaminated clothing before reuse.

5. Fire-fighting measures

Suitable extinguishing media	Alcohol resistant foam. Water fog. Dry chemical powder. Carbon dioxide (CO2).
Unsuitable extinguishing media	Do not use water jet as an extinguisher, as this will spread the fire.
Specific hazards arising from the chemical	Vapors may form explosive mixtures with air. Vapors may travel considerable distance to a source of ignition and flash back. During fire, gases hazardous to health may be formed.
Special protective equipment and precautions for firefighters	Self-contained breathing apparatus and full protective clothing must be worn in case of fire.
Fire fighting equipment/instructions	In case of fire and/or explosion do not breathe fumes. Move containers from fire area if you can do so without risk.
Specific methods	Use standard firefighting procedures and consider the hazards of other involved materials.
General fire hazards	Highly flammable liquid and vapor. This product contains tetrahydrofuran that may form explosive organic peroxide when exposed to air or light or with age.

6. Accidental release measures

Personal precautions, protective equipment and emergency procedures

Keep unnecessary personnel away. Keep people away from and upwind of spill/leak. Keep out of low areas. Eliminate all ignition sources (no smoking, flares, sparks, or flames in immediate area). Wear appropriate protective equipment and clothing during clean-up. Avoid breathing mist or vapor. Do not touch damaged containers or spilled material unless wearing appropriate protective clothing. Ventilate closed spaces before entering them. Local authorities should be advised if significant spillages cannot be contained. For personal protection, see section 8 of the SDS.

Methods and materials for containment and cleaning up

Eliminate all ignition sources (no smoking, flares, sparks, or flames in immediate area). Take precautionary measures against static discharge. Use only non-sparking tools. Keep combustibles (wood, paper, oil, etc.) away from spilled material. This product is miscible in water.

Large Spills: Stop the flow of material, if this is without risk. Use water spray to reduce vapors or divert vapor cloud drift. Dike the spilled material, where this is possible. Cover with plastic sheet to prevent spreading. Use a non-combustible material like vermiculite, sand or earth to soak up the product and place into a container for later disposal. Prevent entry into waterways, sewer, basements or confined areas. Following product recovery, flush area with water.

Small Spills: Absorb with earth, sand or other non-combustible material and transfer to containers for later disposal. Wipe up with absorbent material (e.g. cloth, fleece). Clean surface thoroughly to remove residual contamination.

Never return spills to original containers for re-use. For waste disposal, see section 13 of the SDS.

Environmental precautions

Avoid discharge into drains, water courses or onto the ground.

7. Handling and storage

Precautions for safe handling

Vapors may form explosive mixtures with air. Do not handle, store or open near an open flame, sources of heat or sources of ignition. Protect material from direct sunlight. Explosion-proof general and local exhaust ventilation. Take precautionary measures against static discharges. All equipment used when handling the product must be grounded. Use non-sparking tools and explosion-proof equipment. Avoid breathing mist or vapor. Avoid contact with eyes, skin, and clothing. Avoid prolonged exposure. Do not taste or swallow. When using, do not eat, drink or smoke. Wear appropriate personal protective equipment. Wash hands thoroughly after handling. Observe good industrial hygiene practices.

Conditions for safe storage, including any incompatibilities

Store locked up. Keep away from heat, sparks and open flame. Prevent electrostatic charge build-up by using common bonding and grounding techniques. Store in a cool, dry place out of direct sunlight. Store in original tightly closed container. Store in a well-ventilated place. Store away from incompatible materials (see Section 10 of the SDS).

8. Exposure controls/personal protection

Occupational exposure limits

US. OSHA Table Z-1 Limits for Air Contaminants (29 CFR 1910.1000)

Components	Type	Value
Acetone (CAS 67-64-1)	PEL	2400 mg/m3
		1000 ppm
Cyclohexanone (CAS 108-94-1)	PEL	200 mg/m3
		50 ppm
Furan, Tetrahydro- (CAS 109-99-9)	PEL	590 mg/m3
		200 ppm
Methyl ethyl ketone (CAS 78-93-3)	PEL	590 mg/m3
		200 ppm

US. ACGIH Threshold Limit Values

Components	Type	Value
Acetone (CAS 67-64-1)	STEL	750 ppm
	TWA	500 ppm
Cyclohexanone (CAS 108-94-1)	STEL	50 ppm
	TWA	20 ppm
Furan, Tetrahydro- (CAS 109-99-9)	STEL	100 ppm

US. ACGIH Threshold Limit Values

Components	Type	Value
	TWA	50 ppm
Methyl ethyl ketone (CAS 78-93-3)	STEL	300 ppm
	TWA	200 ppm

US. NIOSH: Pocket Guide to Chemical Hazards

Components	Type	Value
Acetone (CAS 67-64-1)	TWA	590 mg/m3
		250 ppm
Cyclohexanone (CAS 108-94-1)	TWA	100 mg/m3
		25 ppm
Furan, Tetrahydro- (CAS 109-99-9)	STEL	735 mg/m3
		250 ppm
	TWA	590 mg/m3
		200 ppm
Methyl ethyl ketone (CAS 78-93-3)	STEL	885 mg/m3
		300 ppm
	TWA	590 mg/m3
		200 ppm

Biological limit values

ACGIH Biological Exposure Indices

Components	Value	Determinant	Specimen	Sampling Time
Acetone (CAS 67-64-1)	50 mg/l	Acetone	Urine	*
Cyclohexanone (CAS 108-94-1)	80 mg/l	1,2-Cyclohexanediol, with hydrolysis	Urine	*
	8 mg/l	Cyclohexanol, with hydrolysis	Urine	*
Furan, Tetrahydro- (CAS 109-99-9)	2 mg/l	Tetrahydrofuran	Urine	*
Methyl ethyl ketone (CAS 78-93-3)	2 mg/l	MEK	Urine	*

* - For sampling details, please see the source document.

Exposure guidelines

US - California OELs: Skin designation

Cyclohexanone (CAS 108-94-1) Can be absorbed through the skin.

US - Minnesota Haz Subs: Skin designation applies

Cyclohexanone (CAS 108-94-1) Skin designation applies.

US - Tennessee OELs: Skin designation

Cyclohexanone (CAS 108-94-1) Can be absorbed through the skin.

US ACGIH Threshold Limit Values: Skin designation

Cyclohexanone (CAS 108-94-1) Can be absorbed through the skin.
Furan, Tetrahydro- (CAS 109-99-9) Can be absorbed through the skin.

US. NIOSH: Pocket Guide to Chemical Hazards

Cyclohexanone (CAS 108-94-1) Can be absorbed through the skin.

Appropriate engineering controls Explosion-proof general and local exhaust ventilation. Good general ventilation (typically 10 air changes per hour) should be used. Ventilation rates should be matched to conditions. If applicable, use process enclosures, local exhaust ventilation, or other engineering controls to maintain airborne levels below recommended exposure limits. If exposure limits have not been established, maintain airborne levels to an acceptable level. Eye wash facilities and emergency shower must be available when handling this product.

Individual protection measures, such as personal protective equipment

Eye/face protection Face shield is recommended. Wear safety glasses with side shields (or goggles).

Skin protection	
Hand protection	Wear appropriate chemical resistant gloves.
Other	Wear appropriate chemical resistant clothing.
Respiratory protection	If engineering controls do not maintain airborne concentrations below recommended exposure limits (where applicable) or to an acceptable level (in countries where exposure limits have not been established), an approved respirator must be worn.
Thermal hazards	Wear appropriate thermal protective clothing, when necessary.
General hygiene considerations	When using, do not eat, drink or smoke. Always observe good personal hygiene measures, such as washing after handling the material and before eating, drinking, and/or smoking. Routinely wash work clothing and protective equipment to remove contaminants.

9. Physical and chemical properties

Appearance	
Physical state	Liquid.
Form	Translucent liquid.
Color	Purple
Odor	Solvent.
Odor threshold	Not available.
pH	Not available.
Melting point/freezing point	Not available.
Initial boiling point and boiling range	151 °F (66.11 °C)
Flash point	14.0 - 23.0 °F (-10.0 - -5.0 °C)
Evaporation rate	5.5 - 8
Flammability (solid, gas)	Not available.
Upper/lower flammability or explosive limits	
Flammability limit - lower (%)	1.8
Flammability limit - upper (%)	11.8
Explosive limit - lower (%)	Not available.
Explosive limit - upper (%)	Not available.
Vapor pressure	145 mm Hg @ 20 C
Vapor density	2.5
Relative density	0.84 +/- 0.02 @20°C
Solubility(ies)	
Solubility (water)	Negligible
Partition coefficient (n-octanol/water)	Not available.
Auto-ignition temperature	Not available.
Decomposition temperature	Not available.
Viscosity	Not available.
Other information	
Bulk density	7 lb/gal
VOC (Weight %)	505 g/l SQACMD Method 24

10. Stability and reactivity

Reactivity	The product is stable and non-reactive under normal conditions of use, storage and transport.
Chemical stability	Material is stable under normal conditions.
Possibility of hazardous reactions	No dangerous reaction known under conditions of normal use.
Conditions to avoid	Avoid heat, sparks, open flames and other ignition sources. Avoid temperatures exceeding the flash point. Contact with incompatible materials.
Incompatible materials	Acids. Strong oxidizing agents. Ammonia. Amines. Isocyanates. Caustics.

Hazardous decomposition products No hazardous decomposition products are known.

11. Toxicological information

Information on likely routes of exposure

Inhalation May be fatal if swallowed and enters airways. Headache. Nausea, vomiting. May cause irritation to the respiratory system. Vapors have a narcotic effect and may cause headache, fatigue, dizziness and nausea. Prolonged inhalation may be harmful.

Skin contact Causes skin irritation.

Eye contact Causes serious eye irritation.

Ingestion May be fatal if swallowed and enters airways. Harmful if swallowed. Harmful if swallowed. Droplets of the product aspirated into the lungs through ingestion or vomiting may cause a serious chemical pneumonia.

Symptoms related to the physical, chemical and toxicological characteristics Irritation of nose and throat. Aspiration may cause pulmonary edema and pneumonitis. Severe eye irritation. Symptoms may include stinging, tearing, redness, swelling, and blurred vision. May cause respiratory irritation. Skin irritation. May cause redness and pain. Symptoms of overexposure may be headache, dizziness, tiredness, nausea and vomiting.

Information on toxicological effects

Acute toxicity May be fatal if swallowed and enters airways. Narcotic effects. May cause respiratory irritation.

Components	Species	Test Results
Acetone (CAS 67-64-1)		
Acute		
Dermal		
LD50	Rabbit	20 ml/kg
Inhalation		
LC50	Rat	50 mg/l, 8 Hours
Oral		
LD50	Rat	5800 mg/kg
Cyclohexanone (CAS 108-94-1)		
Acute		
Dermal		
LD50	Rabbit	948 mg/kg
Inhalation		
LC50	Rat	8000 ppm, 4 hours
Oral		
LD50	Rat	1540 mg/kg

* Estimates for product may be based on additional component data not shown.

Skin corrosion/irritation Causes skin irritation.

Serious eye damage/eye irritation Causes serious eye irritation.

Respiratory or skin sensitization

Respiratory sensitization Not available.

Skin sensitization This product is not expected to cause skin sensitization.

Germ cell mutagenicity No data available to indicate product or any components present at greater than 0.1% are mutagenic or genotoxic.

Carcinogenicity In 2012 USEPA Integrated Risk Information System (IRIS) reviewed a two species inhalation lifetime study on THF conducted by NTP (1998). Male rats developed renal tumors and female mice developed liver tumors while neither the female rats nor the male mice showed similar results. Because the carcinogenic mechanisms could not be identified clearly in either species for either tumor, the EPA determined that the male rat and female mouse findings are relevant to the assessment of carcinogenic potential in humans. Therefore, the IRIS review concludes that these data in aggregate indicate that there is "suggestive evidence of carcinogenic potential" following exposure to THF by all routes of exposure.

IARC Monographs. Overall Evaluation of Carcinogenicity

Cyclohexanone (CAS 108-94-1) 3 Not classifiable as to carcinogenicity to humans.

OSHA Specifically Regulated Substances (29 CFR 1910.1001-1050)

Not listed.

Reproductive toxicity This product is not expected to cause reproductive or developmental effects.

Specific target organ toxicity - single exposure Narcotic effects. May cause drowsiness and dizziness. Respiratory tract irritation.

Specific target organ toxicity - repeated exposure Not classified.

Aspiration hazard May be fatal if swallowed and enters airways.

Chronic effects Prolonged inhalation may be harmful.

12. Ecological information

Ecotoxicity The product is not classified as environmentally hazardous. However, this does not exclude the possibility that large or frequent spills can have a harmful or damaging effect on the environment.

Components		Species	Test Results
Acetone (CAS 67-64-1)			
Aquatic			
Fish	LC50	Fathead minnow (Pimephales promelas)	> 100 mg/l, 96 hours
Cyclohexanone (CAS 108-94-1)			
Aquatic			
Fish	LC50	Fathead minnow (Pimephales promelas)	481 - 578 mg/l, 96 hours

* Estimates for product may be based on additional component data not shown.

Persistence and degradability No data is available on the degradability of this product.

Bioaccumulative potential No data available.

Partition coefficient n-octanol / water (log Kow)

Acetone (CAS 67-64-1)	-0.24
Cyclohexanone (CAS 108-94-1)	0.81
Furan, Tetrahydro- (CAS 109-99-9)	0.46
Methyl ethyl ketone (CAS 78-93-3)	0.29

Mobility in soil No data available.

Other adverse effects No other adverse environmental effects (e.g. ozone depletion, photochemical ozone creation potential, endocrine disruption, global warming potential) are expected from this component.

13. Disposal considerations

Disposal instructions Collect and reclaim or dispose in sealed containers at licensed waste disposal site. This material and its container must be disposed of as hazardous waste. Do not allow this material to drain into sewers/water supplies. Do not contaminate ponds, waterways or ditches with chemical or used container. Dispose of contents/container in accordance with local/regional/national/international regulations.

Local disposal regulations Dispose in accordance with all applicable regulations.

Hazardous waste code The waste code should be assigned in discussion between the user, the producer and the waste disposal company.

Waste from residues / unused products Dispose of in accordance with local regulations. Empty containers or liners may retain some product residues. This material and its container must be disposed of in a safe manner (see: Disposal instructions).

Contaminated packaging Empty containers should be taken to an approved waste handling site for recycling or disposal. Since emptied containers may retain product residue, follow label warnings even after container is emptied.

14. Transport information

DOT

UN number UN1993

UN proper shipping name Flammable liquids, n.o.s. (Methyl ethyl ketone RQ = 26274 LBS, Acetone RQ = 13130 LBS)

Transport hazard class(es)

Class 3

Subsidiary risk -

Label(s) 3

Packing group II

Special precautions for user	Read safety instructions, SDS and emergency procedures before handling.
Special provisions	IB2, T7, TP1, TP8, TP28
Packaging exceptions	150
Packaging non bulk	202
Packaging bulk	242

IATA

UN number	UN1993
UN proper shipping name	Flammable liquid, n.o.s. (Methyl ethyl ketone, Acetone)
Transport hazard class(es)	
Class	3
Subsidiary risk	-
Packing group	II
Environmental hazards	No.
ERG Code	3H
Special precautions for user	Read safety instructions, SDS and emergency procedures before handling.

IMDG

UN number	UN1993
UN proper shipping name	FLAMMABLE LIQUID, N.O.S. (Methyl ethyl ketone, Acetone)
Transport hazard class(es)	
Class	3
Subsidiary risk	-
Packing group	II
Environmental hazards	
Marine pollutant	No.
EmS	F-E, S-E
Special precautions for user	Read safety instructions, SDS and emergency procedures before handling.

Transport in bulk according to Annex II of MARPOL 73/78 and the IBC Code Not available.

15. Regulatory information

US federal regulations This product is a "Hazardous Chemical" as defined by the OSHA Hazard Communication Standard, 29 CFR 1910.1200.
All components are on the U.S. EPA TSCA Inventory List.

TSCA Section 12(b) Export Notification (40 CFR 707, Subpt. D)

Not regulated.

OSHA Specifically Regulated Substances (29 CFR 1910.1001-1050)

Not listed.

CERCLA Hazardous Substance List (40 CFR 302.4)

Acetone (CAS 67-64-1)	LISTED
Cyclohexanone (CAS 108-94-1)	LISTED
Furan, Tetrahydro- (CAS 109-99-9)	LISTED
Methyl ethyl ketone (CAS 78-93-3)	LISTED

Superfund Amendments and Reauthorization Act of 1986 (SARA)

Hazard categories Immediate Hazard - Yes
Delayed Hazard - No
Fire Hazard - Yes
Pressure Hazard - No
Reactivity Hazard - No

SARA 302 Extremely hazardous substance

Not listed.

SARA 311/312 Hazardous chemical No

SARA 313 (TRI reporting)

Not regulated.

Other federal regulations

Clean Air Act (CAA) Section 112 Hazardous Air Pollutants (HAPs) List

Not regulated.

Clean Air Act (CAA) Section 112(r) Accidental Release Prevention (40 CFR 68.130)

Not regulated.

Safe Drinking Water Act (SDWA) Not regulated.

Drug Enforcement Administration (DEA). List 2, Essential Chemicals (21 CFR 1310.02(b) and 1310.04(f)(2) and Chemical Code Number

Acetone (CAS 67-64-1)	6532
Methyl ethyl ketone (CAS 78-93-3)	6714

Drug Enforcement Administration (DEA). List 1 & 2 Exempt Chemical Mixtures (21 CFR 1310.12(c))

Acetone (CAS 67-64-1)	35 %WV
Methyl ethyl ketone (CAS 78-93-3)	35 %WV

DEA Exempt Chemical Mixtures Code Number

Acetone (CAS 67-64-1)	6532
Methyl ethyl ketone (CAS 78-93-3)	6714

US state regulations

US. Massachusetts RTK - Substance List

Acetone (CAS 67-64-1)
Cyclohexanone (CAS 108-94-1)
Furan, Tetrahydro- (CAS 109-99-9)
Methyl ethyl ketone (CAS 78-93-3)

US. New Jersey Worker and Community Right-to-Know Act

Acetone (CAS 67-64-1)
Cyclohexanone (CAS 108-94-1)
Furan, Tetrahydro- (CAS 109-99-9)
Methyl ethyl ketone (CAS 78-93-3)

US. Pennsylvania Worker and Community Right-to-Know Law

Acetone (CAS 67-64-1)
Cyclohexanone (CAS 108-94-1)
Furan, Tetrahydro- (CAS 109-99-9)
Methyl ethyl ketone (CAS 78-93-3)

US. Rhode Island RTK

Acetone (CAS 67-64-1)
Cyclohexanone (CAS 108-94-1)
Furan, Tetrahydro- (CAS 109-99-9)
Methyl ethyl ketone (CAS 78-93-3)

US. California Proposition 65

California Safe Drinking Water and Toxic Enforcement Act of 1986 (Proposition 65): This material is not known to contain any chemicals currently listed as carcinogens or reproductive toxins.

International Inventories

Country(s) or region	Inventory name	On inventory (yes/no)*
Canada	Domestic Substances List (DSL)	Yes
United States & Puerto Rico	Toxic Substances Control Act (TSCA) Inventory	Yes

*A "Yes" indicates this product complies with the inventory requirements administered by the governing country(s).
A "No" indicates that one or more components of the product are not listed or exempt from listing on the inventory administered by the governing country(s).

16. Other information, including date of preparation or last revision

Issue date	27-May-2015
Revision date	-
Version #	01
HMIS® ratings	Health: 2 Flammability: 3 Physical hazard: 0

NFPA ratings



Disclaimer

The information in the sheet was written based on the best knowledge and experience currently available. Oatey Co. cannot anticipate all conditions under which this information and its product, or the products of other manufacturers in combination with its product, may be used. It is the user's responsibility to ensure safe conditions for handling, storage and disposal of the product, and to assume liability for loss, injury, damage or expense due to improper use.

APEX ENGINEERING PRODUCTS CORPORATION
1241 Shoreline Drive
Aurora, IL 60504
Phone Number: 630-820-8888 Fax: 630-820-8886

SAFETY DATA SHEET

1. IDENTIFICATION OF THE PRODUCT AND COMPANY

Product Identifier

RYDLYME (pronounced: *rid-lime*)
Aqueous water scale cleaner/descaler.

Relevant identified uses of the product and uses advised against

General use: Aqueous acidic cleaner for the removal of calcium, lime, rust and other mineral deposits.
Uses advised against: Do not mix with strong oxidizing agents or strong caustics.

Manufacturer Information

Apex Engineering Products Corporation, established 1942
1241 Shoreline Drive
Aurora, Illinois 60504

Emergency Phone (Chemtrec): 800-424-9300 (Domestic), 703-527-3887 (International)

2. HAZARD IDENTIFICATION

Classification of the substance or mixture

Mixture

Hazard pictograms:



Signal word: Warning

Hazard statements:

H303: May be harmful if swallowed.
H316: Causes mild skin irritation.
H320: Causes eye irritation.

Precautionary statements:

(Prevention) P280: Wear protective gloves and eye protection.
P281: Use personal protective equipment as required.
(Response) P302+P352: IF ON SKIN: Wash with soap and water.
P321: Specific treatment, see section 4 of this SDS.

P332+P313: If skin irritation occurs, get medical attention.
P305+P351+P338: IF IN EYES: Rinse cautiously with water for several minutes, remove contact lenses if present and easy to do, continue rinsing.
P337+P313: If eye irritation persists, get medical attention.

Other hazards: Not applicable.

3. COMPOSITION/INFORMATION ON INGREDIENTS

Substance: Not applicable.

Mixture: Chemical characterization (preparation).

CAS	PRODUCT NAME: RYDLYME	% by Weight
7647-01-0	Hydrochloric acid	5-9

There are no additional ingredients present which, within the current knowledge of the supplier, are classified as hazardous to the health or the environment. Confidential Business Information (CBI) is not harmonized under the Global Harmonized System (GHS). The full disclosure of this products' ingredients is protected under the Illinois Trade Secret Act. However, the CBI provisions have not compromised the health and safety of our users.

4. FIRST AID MEASURES

Description of first aid measures

After inhalation: Product is not designed to be misted, however, if product mist causes respiratory irritation or distress, move the exposed person to fresh air immediately. If irritation persists, seek medical attention.
After skin contact: Wash affected area with soap and water. If irritation persists, seek medical attention.
After eye contact: Immediately flush eyes with large amounts of water for 15 minutes. Remove contact lenses if present, after the first 5 minutes and continue rinsing. If irritation persists, seek medical attention.
After swallowing: Do NOT induce vomiting, drink milk, egg whites, etc. and seek immediate medical attention.

Most important symptoms and effects, both acute and delayed

Potential health symptoms and effects
Eyes: Causes moderate to severe eye irritation. Symptoms include redness, stinging, tearing and swelling.
Skin: May cause mild to moderate irritation. Repeated and prolonged use may result in drying or cracking of skin or dermatitis.
Inhalation: Inhalation of mist or spray may cause mild irritation of the respiratory tract.
Ingestion: May be harmful if swallowed. May cause gastrointestinal irritation with nausea, vomiting, and diarrhea.

5. FIRE-FIGHTING MEASURES

Extinguishing media
Suitable extinguishing media: Use extinguishing media suitable for the surrounding fire.
Unsuitable media: None known.
Specific hazards arising from the mixture: None known.
Advice for firefighters
Protective equipment: As in any fire, wear self-contained breathing apparatus (pressure-demand, MSHA/NIOSH approved or equivalent and full protective gear).

6. ACCIDENTAL RELEASE MEASURES

Personal precautions, protective equipment and emergency procedures: Wear appropriate protective clothing designated in Section 8. Ventilate the area.
Environmental precautions: Rinse area with copious amounts of water to dilute. Sodium bicarbonate may also be used to absorb and/or neutralize liquid. Dispose of material in accordance with the local, State, Provincial, and Federal regulations for your location.
Methods and materials for containment and cleaning up: Absorb with liquid binding material.

7. HANDLING AND STORAGE

Precautions for safe handling: Observe label precautions. Wear all appropriate protective equipment specified in Section 8. Keep containers closed when not in use.
Condition for safe storage: Keep in cool, dry, ventilated storage areas in closed containers. Transfer only to approved containers having correct labeling. Containers that have been opened should be carefully resealed and kept upright to prevent leakage. The recommended storage temperature is between -12°C/10°F and 81°C/180°F. Keep out of reach of children.

8. EXPOSURE CONTROLS/PERSONAL PROTECTION

Control parameters: Contains no substances with occupational exposure values.

Exposure controls

Engineering: Maintain general industrial hygiene practices. Use normal exhaust, vent to atmosphere.
Personal protective equipment: Facilities storing or using this material should be equipped with an eyewash station. Change contaminated clothing. Preventive skin protection is recommended. Wash hands thoroughly after use, before eating, drinking or using the lavatory.
Respiratory equipment: None required under normal operating conditions, even when materials vapors and/or mists occur.
Protective gloves: Recommended however not mandated. Material is non-toxic and can be held in the open hand without risk.
Eye protection: Wear protective goggles or safety glasses during use.

9. PHYSICAL AND CHEMICAL PROPERTIES

Appearance:	Dark Liquid
Odor:	Comparable to Almonds
Odor threshold:	Not applicable
pH:	Unreadable, generally < 3
Freezing/melting point:	-26°C (-15°F)
Initial boiling point:	100°C (212°F)
Flash point:	Not applicable
Evaporation rate:	Not determined
Flammability (solid, gas):	Not applicable
Lower explosive limit (LEL)	Not determined
Upper explosive limit (UEL)	Not determined
Vapor Pressure:	Not determined
Density at 20°C:	1.045 g/cm^3 (8.7208 lbs/gal).
Solubility in Water:	Complete
Partition coefficient (n-octano/water):	Not determined
Autoignition temperature:	Not determined
Decomposition temperature:	Not determined

10. STABILITY AND REACTIVITY

Reactivity: No special reactivity reported, hazardous polymerization will not occur.
Chemical stability: Stable under recommended storage conditions.
Possibility of hazardous reactions: None known.
Conditions to Avoid: Extreme temperatures, contact with incompatible materials.
Incompatible materials: Strong alkalis, oxidizing agents, chlorinated products (such as bleach).
Hazardous decomposition: None known.

11. TOXICOLOGICAL INFORMATION

Information on toxicological effects
No toxicity tests have been carried out for this product. Acute toxicity data was estimated based on the toxicity of the individual components contained in this product.

Acute oral toxicity: Product is expected to have low acute oral toxicity.
Acute inhalation toxicity: Product is expected to have low acute inhalation toxicity.
Acute dermal toxicity: Product is expected to have low acute dermal toxicity.
Skin irritation: May cause mild skin irritation.
Eye irritation: Causes moderate to severe eye irritation.
Sensitization: No sensitizing effects known.
Carcinogenic categories: None of the components of this product are listed as carcinogens by AGCIH, IARC, NTP or OSHA.

12. ECOLOGICAL INFORMATION

Aquatic toxicity: Product is expected to have low toxicity to aquatic organisms.
Persistence and degradability: Product is readily biodegradable.
Bioaccumulation potential: Material will not bioaccumulate.
Mobility in soil: The components of this product are water soluble and highly mobile in soil.
Results of PBT and vPvB assessment: No data available.
Other adverse effects: None known.

13. DISPOSAL CONSIDERATIONS

Waste disposal: Unused product can be disposed of down sanitary sewers with water. Used solution may be hazardous as a result of the pre-existing contaminants present in the equipment being cleaned. Dispose of material in accordance with the local, State, Provincial, and Federal regulations for your location.
Contaminated packaging: Rinse with water and offer for recycling, if available in your area. Otherwise, dispose as non-hazardous waste.

14. TRANSPORT INFORMATION

UN Number: DOT-Not regulated, IMDG/IATA-Not applicable.
UN proper shipping name: DOT/IATA-Not applicable, IMDG-Not regulated.
Transport hazard class(es): DOT/IMDG/IATA-Not applicable.
Packing group: DOT/IMDG/IATA-Not applicable.
Marine pollutant: No.
Special precautions: Not applicable.

15. REGULATORY INFORMATION

Safety, health and environmental regulations/legislation specific for substance or mixture

U.S. Federal Regulations

OSHA Hazard Communication Standard: This material is not classified as hazardous in accordance with OSHA 29 CFR 1910.1200.

OSHA Process Safety Management Standard: Components of this product are not regulated under OSHA PSM Standard 29 CFR 1910.119.

TSCA Status: All components of this product are listed on the Toxic Substance Control Act (TSCA) Inventory.

SARA Section 311/312 Hazard Categories: Not classified as hazardous.

SARA 313 Information: Not listed.

Comprehensive Response Compensation and Liability Act (CERCLA): Not reportable.

Clean Air Act (CAA): This product does not contain any chemicals that are listed as Hazardous Air Pollutants (HAPs) designated in CAA Section 112 (b).

Clean Water Act (CWA): None of the chemicals in this product are listed as Hazardous Substances, Priority Pollutants or Toxic Pollutants under the CWA.

U.S. State Regulations

California Prop 65, Safe Drinking Water and Toxic Enforcement Act of 1986: This product contains no chemical(s) known to the state of California to cause cancer or other reproductive harm**.**

Canada

WHMIS Hazard Symbol and Classification: Not applicable/Not classified as hazardous

Canadian Ingredient Disclosure List (IDL): None of the components in this product are listed on the IDL.

Canadian National Pollutant Release Inventory (NPRI): None of the components in this product are listed on the NPRI.

16. OTHER INFORMATION

Please use material only as directed. If procedures are not published for your particular application, please call for assistance. Furthermore, RYDLYME is designed to be used by itself or diluted with water and water only. Do not heat. Use RYDLYME at an ambient temperature. Vent circulating solution to atmosphere. Some adverse reactions may occur with some alloys of aluminum, magnesium, zinc and/or other sacrificial/inferior metallurgies. Please consult the manufacturer.

CAUTION: RYDLYME is non-corrosive, but the application of RYDLYME may expose pre-existing under deposit corrosion (pitting, holes or similar damage) that can result in leaks in pipes, equipment or systems.

Date of preparation: Creation date for SDS 03/01/2015.

FOR ADDITIONAL INFORMATION, PLEASE CONTACT OUR MANUFACTURING FACILITY AT 630-820-8888 OR OUR WEBSITE AT www.ApexEngineeringProducts.com.

This data is furnished independent of any sales of the product only for your investigation and independent verification. While information is believed to be correct, Apex Engineering Products Corporation shall in no event be responsible for any damage whatsoever, directly or indirectly, resulting from the publication or use of or reliance upon data contained herein. No warranty, either expressed or implied, of merchantability, of fitness, or of any nature with respect to the product, or to the data, is made herein.

Sakrete Concrete Glue

Safety Data Sheet

according to the Hazard Communication Standard (CFR29 1910.1200) HazCom 2012.

Date of issue: 04/17/2014 Revision date: 02/24/2016 Version: 1.0

SECTION 1: Identification of the substance/mixture and of the company/undertaking

1.1. Product identifier

Product form : Mixture

Product name : Sakrete Concrete Glue

Product code : Not available.

1.2. Relevant identified uses of the substance or mixture and uses advised against

Use of the substance/mixture : Adhesive.

1.3. Details of the supplier of the safety data sheet

Sakrete of North America
625 Griffith Rd., Ste 100
28217 Charlotte, NC - USA
T 866-725-7383

1.4. Emergency telephone number

Emergency number : CHEMTREC (800) 424-9300
CHEMTREC International +1 (703) 527-3887 24 hr

SECTION 2: Hazards identification

2.1. Classification of the substance or mixture

GHS-US classification

Not classified.

2.2. Label elements

GHS-US labelling

No labelling applicable.

2.3. Other hazards

No additional information available.

2.4. Unknown acute toxicity (GHS-US)

70 % of the mixture consists of ingredient(s) of unknown acute toxicity.

SECTION 3: Composition/information on ingredients

3.1. Substance

Not applicable.

3.2. Mixture

None by OSHA HazCom 2012 criteria.

SECTION 4: First aid measures

4.1. Description of first aid measures

First-aid measures after inhalation : If breathing is difficult, remove victim to fresh air and keep at rest in a position comfortable for breathing. Get medical advice/attention if you feel unwell.

First-aid measures after skin contact : In case of contact, immediately flush skin with plenty of water. Remove contaminated clothing and shoes. Wash clothing before reuse. Get medical attention if you feel unwell.

First-aid measures after eye contact : In case of contact, immediately flush eyes with plenty of water. Remove contact lenses, if worn. If irritation persists, get medical attention.

First-aid measures after ingestion : If swallowed, do NOT induce vomiting unless directed to do so by medical personnel. Never give anything by mouth to an unconscious person. Get medical advice/attention.

4.2. Most important symptoms and effects, both acute and delayed

Symptoms/injuries after inhalation : May cause respiratory tract irritation.

Symptoms/injuries after skin contact : Repeated or prolonged contact may cause skin irritation. Symptoms may include redness, drying, defatting and cracking of the skin.

Symptoms/injuries after eye contact : May cause eye irritation. Symptoms may include discomfort or pain, excess blinking and tear production, with poss ble redness and swelling.

Symptoms/injuries after ingestion : May be harmful if swallowed. May cause gastrointestinal irritation if ingested.

4.3. Indication of any immediate medical attention and special treatment needed

Symptoms may not appear immediately. In case of accident or if you feel unwell, seek medical advice immediately (show the label or SDS where possible).

SECTION 5: Firefighting measures

5.1. Extinguishing media

Suitable extinguishing media : Powder, water fog, foam, carbon dioxide.

Unsuitable extinguishing media : None known.

5.2. Special hazards arising from the substance or mixture

Fire hazard : Products of combustion may include, and are not limited to: oxides of carbon.

5.3. Advice for firefighters

Protection during firefighting : Keep upwind of fire. Wear full fire fighting turn-out gear (full Bunker gear) and respiratory protection (SCBA).

SECTION 6: Accidental release measures

6.1. Personal precautions, protective equipment and emergency procedures

General measures : Use personal protection recommended in Section 8. Isolate the hazard area and deny entry to unnecessary and unprotected personnel.

6.2. Methods and material for containment and cleaning up

For containment : Contain and/or absorb spill with inert material (e.g. sand, vermiculite), then place in a suitable container. Do not flush to sewer or allow to enter waterways. Use appropriate Personal Protective Equipment (PPE).

Methods for cleaning up : Scoop up material and place in a disposal container.

6.3. Reference to other sections

See section 8 for further information on protective clothing and equipment and section 13 for advice on waste disposal.

SECTION 7: Handling and storage

7.1. Precautions for safe handling

Precautions for safe handling : Avoid contact with skin and eyes. Avoid breathing vapour or mist. Do not swallow. Handle and open container with care. When using do not eat, drink or smoke.

Hygiene measures : Launder contaminated clothing before reuse. Wash hands before eating, drinking, or smoking.

7.2. Conditions for safe storage, including any incompatibilities

Storage conditions : Keep out of the reach of children. Keep container tightly closed and dry. Keep cool. Keep from freezing. Do not store at temperatures above 38 °C / 100 °F.

7.3. Specific end use(s)

Not available.

SECTION 8: Exposure controls/personal protection

8.1. Control parameters

No additional information available.

8.2. Exposure controls

Appropriate engineering controls : Use ventilation adequate to keep exposures (airborne levels of dust, fume, vapor, etc.) below recommended exposure limits.

Hand protection : Wear chemically resistant protective gloves.

Eye protection : Safety glasses with side shields.

Skin and body protection : Wear suitable protective clothing.

Respiratory protection : None necessary under normal conditions of use. A NIOSH approved respirator is recommended in poorly ventilated areas or when permissible exposure limits may be exceeded.

Environmental exposure controls : Maintain levels below Community environmental protection thresholds.

Other information : Do not eat, smoke or drink where material is handled, processed or stored. Wash hands carefully before eating or smoking. Handle according to established industrial hygiene and safety practices.

SECTION 9: Physical and chemical properties

9.1. Information on basic physical and chemical properties

Physical state : Liquid.

Appearance : No data available.

Colour : White.

Odour : Slight, sweet.

Odour threshold : No data available.

pH : 4.5 - 6

Relative evaporation rate (butylacetate=1) : No data available.

Melting point	:	~ 0 °C (~ 32°F)
Freezing point	:	~ 0 °C (~ 32°F)
Boiling point	:	> 100 °C (>212°F)
Flash point	:	> 100 °C (>212°F)
Self ignition temperature	:	No data available.
Decomposition temperature	:	No data available.
Flammability (solid, gas)	:	Not flammable.
Vapour pressure	:	17.5 mm Hg @ 20°C (68°F)
Relative vapour density at 20 °C	:	No data available.
Relative density	:	1.08 - 1.1
Solubility	:	Miscible.
Log Pow	:	No data available.
Log Kow	:	No data available.
Viscosity, kinematic	:	No data available.
Viscosity, dynamic	:	No data available.
Explosive properties	:	No data available.
Oxidising properties	:	No data available.
Explosive limits	:	No data available.

9.2. Other information

VOC content : <1 g/l

SECTION 10: Stability and reactivity

10.1. Reactivity

No dangerous reaction known under conditions of normal use.

10.2. Chemical stability

Stable under normal storage conditions.

10.3. Possibility of hazardous reactions

No dangerous reaction known under conditions of normal use.

10.4. Conditions to avoid

Heat. Incompat ble materials. Keep from freezing.

10.5. Incompatible materials

Strong oxidizers. Water-Reactive materials.

10.6. Hazardous decomposition products

May include, and are not limited to: oxides of carbon.

SECTION 11: Toxicological information

11.1. Information on toxicological effects

Acute toxicity : Not classified.

Sakrete Concrete Glue	
LD50 oral rat	No data available.
LD50 dermal rabbit	No data available.
LC50 inhalation rat	No data available.

Skin corrosion/irritation	:	Based on available data, the classification criteria are not met.
Serious eye damage/irritation	:	Based on available data, the classification criteria are not met.
Respiratory or skin sensitisation	:	Based on available data, the classification criteria are not met.
Germ cell mutagenicity	:	Based on available data, the classification criteria are not met.
Carcinogenicity	:	Based on available data, the classification criteria are not met.
Reproductive toxicity	:	Based on available data, the classification criteria are not met.
Specific target organ toxicity (single exposure)	:	Based on available data, the classification criteria are not met.
Specific target organ toxicity (repeated exposure)	:	Based on available data, the classification criteria are not met.
Aspiration hazard	:	Based on available data, the classification criteria are not met.
Symptoms/injuries after inhalation	:	May cause respiratory tract irritation.
Symptoms/injuries after skin contact	:	Repeated or prolonged contact may cause skin irritation. Symptoms may include redness, drying, defatting and cracking of the skin.

Symptoms/injuries after eye contact : May cause eye irritation. Symptoms may include discomfort or pain, excess blinking and tear production, with possible redness and swelling.

Symptoms/injuries after ingestion : May be harmful if swallowed. May cause gastrointestinal irritation if ingested.

SECTION 12: Ecological information

12.1. Toxicity

Ecology - general : May cause long-term adverse effects in the aquatic environment.

12.2. Persistence and degradability

Sakrete Concrete Glue	
Persistence and degradability	No additional information available.

12.3. Bioaccumulative potential

Sakrete Concrete Glue	
Bioaccumulative potential	No additional information available.

12.4. Mobility in soil

Sakrete Concrete Glue	
Ecology - soil	No additional information available.

12.5. Other adverse effects

Other adverse effects : No additional information available.

SECTION 13: Disposal considerations

13.1. Waste treatment methods

Waste disposal recommendations : This material must be disposed of in accordance with all local, state, provincial, and federal regulations.

SECTION 14: Transport information

In accordance with DOT:

14.1. UN number

Not applicable.

14.2. UN proper shipping name

Not applicable.

14.3. Additional information

Other information : No supplementary information available.

Special transport precautions : Do not handle until all safety precautions have been read and understood.

SECTION 15: Regulatory information

15.1. US Federal regulations

No additional information available.

15.3. US State regulations

Sakrete Concrete Glue	
State or local regulations	This product contains chemicals known to the State of California to cause cancer, birth defects or other reproductive harm.

SOURCE AGENCY CARCINOGEN CLASSIFICATIONS:

IARC (I)	**International Agency for Research on Cancer.**
	1 - Carcinogenic to humans; 2A - Probably carcinogenic to humans; 2B - Possibly carcinogenic to humans; 3 - Not classifiable; 4 - Probably not carcinogenic to humans.
NTP (N)	**National Toxicology Program.**
	1 - Evidence of Carcinogenicity; 2 - Known Human Carcinogens; 3 - Reasonably anticipated to be Human Carcinogen; 4 - Substances delisted from report on Carcinogens; 5 - Twelfth Report - Items under consideration.

SECTION 16: Other information

Date of issue	:	04/17/2014
Data sources	:	SDS prepared pursuant to the Hazard Communication Standard (CFR29 1910.1200) HazCom 2012.
NFPA health hazard	:	1 - Exposure could cause irritation but only minor residual injury even if no treatment is given.
NFPA fire hazard	:	0 - Materials that will not burn.
NFPA reactivity	:	0 - Normally stable, even under fire exposure conditions, and are not reactive with water.

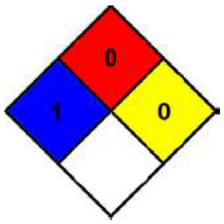

This information is based on our current knowledge and is intended to describe the product for the purposes of health, safety and environmental requirements only. It should not therefore be construed as guaranteeing any specific property of the product

U.S. SILICA COMPANY
SAFETY DATA SHEET

1. IDENTIFICATION

Product identifier: Silica Sand, Ground Silica, and Fine Ground Silica

Product Name/Trade Names:
Sand and Ground Silica Sand (sold under various names: ASTM TESTING SANDS • GLASS SAND • FILPRO® · FLINT SILICA • DM-SERIES • F-SERIES • FOUNDRY SANDS • FJ-SERIES H-SERIES • L-SERIES • N-SERIES • NJ SERIES • OK-SERIES • P-SERIES • T-SERIES • hydraulic fracturing sand, all sizes • frac sand, all sizes • MIN-U-SIL® Fine Ground Silica • MYSTIC WHITE II® • #1 DRY • #1 SPECIAL • PENN SAND® • PRO WHITE® · SILURIAN® · Q-ROK® • SIL-CO-SIL® Ground Silica • MICROSIL® • SUPERSIL® • MASON SAND • GS SERIES • PERSPEC • proppant, all sizes • SHALE FRAC® - SERIES • KOSSE WHITE® • OTTAWA WHITE® • OPTIJUMP® • LIGHTHOUSE™

Chemical Name or Synonym:
Crystalline Silica (Quartz), Sand, Silica Sand, Flint, Ground Silica, Fine Ground Silica, Silica Flour.

Recommended use of the chemical and restrictions on use: (non-exhaustive list): brick, ceramics, foundry castings, glass, grout, hydraulic fracturing sand, frac sand, proppant, mortar, paint and coatings, silicate chemistry, silicone rubber, thermoset plastics.

DO NOT USE U.S. SILICA COMPANY SAND OR GROUND SILICA FOR SAND BLASTING

Manufacturer:
U.S. Silica Company
8490 Progress Drive, Suite 300
Frederick, MD 21701
U.S.A.

Phone: 800-243-7500
Emergency Phone: 301-682-0600
Fax: 301-682-0690

2. HAZARD(S) IDENTIFICATION

Classification:

Physical	Health
Not Hazardous	Carcinogen Category 1A Specific Target Organ Toxicity – Repeated Exposure Category 1



DANGER
May cause cancer by inhalation.
Causes damage to lungs through prolonged or repeated exposure by inhalation.
Response:
If exposed or concerned: Get medical advice.
Disposal:
Dispose of contents/containers in accordance with local regulation.

Prevention
Obtain special instructions before use.
Do not handle until all safety precautions have been read and understood.
Do not breathe dust.
Do not eat, drink or smoke when using this product.
Wear protective gloves and safety glasses or goggles.
In case of inadequate ventilation wear respiratory protection.

3. COMPOSITION / INFORMATION ON INGREDIENTS

Component	CAS No.	Percent
Crystalline Silica (quartz)	14808-60-7	95-99.9

4. FIRST-AID MEASURES

Inhalation: First aid is not generally required. If irritation develops from breathing dust, move the person from the overexposure and seek medical attention if needed.
Skin contact: First aid is not required.
Eye contact: Wash immediately with plenty of water. Do not rub eyes. If irritation persists, seek medical attention.
Ingestion: First aid is not required.
Most important symptoms/effects, acute and delayed: Particulates may cause abrasive eye injury. Inhalation of dust may cause respiratory tract irritation. Symptoms of exposure may include cough, sore throat, nasal congestion, sneezing, wheezing and shortness of breath. Prolonged inhalation of respirable crystalline silica above certain concentrations may cause lung diseases, including silicosis and lung cancer.
Indication of immediate medical attention and special treatment, if necessary: Immediate medical attention is not required.

5. FIRE-FIGHTING MEASURES

Suitable (and unsuitable) extinguishing media: Use extinguishing media appropriate for surrounding fire.

Specific hazards arising from the chemical: Product is not flammable, combustible or explosive.

Special protective equipment and precautions for fire-fighters: None required.

6. ACCIDENTAL RELEASE MEASURES

Personal precautions, protective equipment, and emergency procedures: Wear appropriate protective clothing and respiratory protection (see Section 8). Avoid generating airborne dust during clean-up.

Environmental precautions: No specific precautions. Report releases to regulatory authorities if required by local, state and federal regulations.

Methods and materials for containment and cleaning up: Avoid dry sweeping. Do not use compressed air to clean spilled sand or ground silica. Use water spraying/flushing or ventilated/HEPA filtered vacuum cleaning system. Wet before sweeping. Dispose of in closed containers.

7. HANDLING AND STORAGE

Precautions for safe handling:
Avoid generating dust. Do not breathe dust. Do not rely on your sight to determine if dust is in the air. Respirable crystalline silica dust may be in the air without a visible dust cloud. Use adequate exhaust ventilation and dust collection to reduce respirable crystalline silica dust levels to below the permissible exposure limit ("PEL"). Maintain and test ventilation and dust collection equipment. Use all available work practices to control

dust exposures, such as water sprays. Practice good housekeeping. Do not permit dust to collect on walls, floors, sills, ledges, machinery, or equipment. Keep airborne dust concentrations below permissible exposure limits.

Where necessary to reduce exposures below the PEL or other applicable limit (if lower than the PEL), wear a respirator approved for silica containing dust when using, handling, storing or disposing of this product or bag. See Section 8, for further information on respirators. Do not alter the respirator. Do not wear a tight-fitting respirator with facial hair such as a beard or mustache that prevents a good seal between the respirator and face. Maintain, clean, and fit test respirators in accordance with applicable standards. Wash or vacuum clothing that has become dusty.

Participate in training, exposure monitoring, and health surveillance programs to monitor any potential adverse health effects that may be caused by breathing respirable crystalline silica. The OSHA Respirable Crystalline Silica Standards; 29CFR1910.1053, 1915.1053 and 1926.1053, the OSHA Hazard Communication Standard, 29 CFR Sections 1910.1200, 1915.1200, 1917.28, 1918.90, 1926.59 and 1928.21, and state and local worker or community "right-to-know" laws and regulations should be strictly followed.

DO NOT USE U.S. SILICA COMPANY SAND OR GROUND SILICA FOR SAND BLASTING

Conditions for safe storage, including any incompatibilities: Use dust collection to trap dust produced during loading and unloading. Keep containers closed and store bags to avoid accidental tearing, breaking, or bursting.

8. EXPOSURE CONTROLS / PERSONAL PROTECTION

Exposure guidelines:

Until Effective Date of New OSHA PEL below:

Component	OSHA PEL	ACGIH TLV	NIOSH REL
Crystalline Silica (quartz)	$\frac{10 \text{ mg/m3}}{\%SiO_2 + 2}$ TWA (respirable dust) $\frac{30 \text{ mg/m3}}{\%SiO_2 + 2}$ TWA (total dust)	0.025 mg/m3 TWA (respirable dust)	0.05 mg/m3 TWA (respirable dust)

If crystalline silica (quartz) is heated to more than 870°C, quartz can change to a form of crystalline silica known as tridymite; if crystalline silica (quartz) is heated to more than 1470°C, quartz can change to a form of crystalline silica known as cristobalite. The OSHA PEL for crystalline silica as tridymite or cristobalite is one-half of the OSHA PEL for crystalline silica (quartz).

New OSHA PEL from 2016 Respirable Crystalline Silica Standard – see Effective Dates below.

Component	OSHA PEL	ACGIH TLV	NIOSH REL
Crystalline Silica (quartz, cristobalite and tridymite)	0.05 mg/m3 TWA (respirable dust)	0.025 mg/m3 TWA (respirable dust)	0.05 mg/m3 TWA (respirable dust)

Effective Dates: Construction 29CFR 1926.1153 Effective June 23, 2017
General Industry and Maritime 29CFR 1910.1053 / 1915.1053 Effective June 23, 2018
Oil and Gas including Hydraulic Fracturing 29CFR 1910.1053 Effective June 23, 2018

Appropriate engineering controls: Use adequate general or local exhaust ventilation to maintain concentrations in the workplace below the applicable exposure limits listed above.

Respiratory protection: If it is not possible to reduce airborne exposure levels to below the OSHA PEL or other applicable limit with ventilation, use the table below to assist you in selecting respirators that will reduce personal exposures to below the OSHA PEL. This table is part of the OSHA Respirator Standard 29CFR1910.134(d). ***Assigned protection factor (APF)*** means the workplace level of respiratory protection that a respirator or class of respirators is expected to provide to employees when the employer implements a continuing, effective respiratory protection program as specified by the Standard. For example, an APF of 10 means that the respirator should reduce the airborne concentration of a particulate by a factor of 10, so that if the workplace concentration of a particulate was 150 ug/m3, then a respirator with an APF of 10 should reduce the concentration of particulate to 15 ug/m3. In additional a cartridge change-out schedule must be developed based on the concentrations in the workplace.

1. -- Assigned Protection Factors[5]

Type of respirator[1], [2]	Quarter mask	Half mask	Full facepiece	Helmet/ hood	Loose-fitting facepiece
1. Air-Purifying Respirator	5	[3]10	50	.....	.....
2. Powered Air-Purifying Respirator (PAPR)	.....	50	1,000	[4]25/1,000	25
3. Supplied-Air Respirator (SAR) or Airline Respirator					
• Demand mode	.....	10	50	.....	.....
• Continuous flow mode	.....	50	1,000	[4]25/1,000	25
• Pressure-demand or other positive-pressure mode	.....	50	1,000	.....	.....
4. Self-Contained Breathing Apparatus (SCBA)					
• Demand mode	.....	10	50	50	.....
• Pressure-demand or other positive-pressure mode (e.g., open/closed circuit)	.....	.....	10,000	10,000	.....

Notes:

[1]Employers may select respirators assigned for use in higher workplace concentrations of a hazardous substance for use at lower concentrations of that substance, or when required respirator use is independent of concentration.

[2]The assigned protection factors in Table 1 are only effective when the employer implements a continuing, effective respirator program as required by this section (29 CFR 1910.134), including training, fit testing, maintenance, and use requirements.

[3]This APF category includes filtering facepieces, and half masks with elastomeric facepieces.

[4]The employer must have evidence provided by the respirator manufacturer that testing of these respirators demonstrates performance at a level of protection of 1,000 or greater to receive an APF of 1,000. This level of performance can best be demonstrated by performing a WPF or SWPF study or equivalent testing. Absent such testing, all other PAPRs and SARs with helmets/hoods are to be treated as loose-fitting facepiece respirators, and receive an APF of 25.

[5]These APFs do not apply to respirators used solely for escape. For escape respirators used in association with specific substances covered by 29 CFR 1910 subpart Z, employers must refer to the appropriate substance-specific standards in that subpart. Escape respirators for other IDLH atmospheres are specified by 29 CFR 1910.134 (d)(2)(ii).

Skin protection: Maintain good industrial hygiene. Protection recommended for workers suffering from dermatitis or sensitive skin.

Eye protection: Safety glasses with side shields or goggles recommended if eye contact is anticipated.

Other: None known.

9. PHYSICAL AND CHEMICAL PROPERTIES

Appearance (physical state, color, etc.): White or tan sand: granular, crushed or ground to a powder.
Odor: None.

Odor threshold: Not determined	**pH:** 6-8
Melting point/freezing point: 3110°F/1710°C	**Boiling point/range:** 4046°F/2230°C
Flash point: Not applicable	**Evaporation rate:** Not applicable
Flammable limits: LEL: Not applicable	**UEL:** Not applicable
Vapor pressure: Not applicable	**Vapor density:** Not applicable
Relative density: 2.65	**Solubility(ies):** Insoluble in water
Partition coefficient: n-octanol/water: Not applicable	**Auto-ignition temperature:** Not determined
Decomposition temperature: Not determined	**Viscosity:** Not applicable
Flammability (solid, gas): Not applicable	

10. STABILITY AND REACTIVITY

Reactivity: Not reactive under normal conditions of use.
Chemical stability: Stable.
Possibility of hazardous reactions: Contact with powerful oxidizing agents, such as fluorine, chlorine trifluoride and oxygen difluoride, may cause fires.
Conditions to avoid: Avoid generation of dust in handling and use.
Incompatible materials: Powerful oxidizers such as fluorine, chlorine trifluoride, and oxygen difluoride and hydrofluoric acid.
Hazardous decomposition products: Silica will dissolve in hydrofluoric acid and produce a corrosive gas, silicon tetrafluoride.

11. TOXICOLOGICAL INFORMATION

Acute effects of exposure:
Inhalation: Inhalation of dust may cause respiratory tract irritation. Symptoms of exposure may include cough, sore throat, nasal congestion, sneezing, wheezing and shortness of breath.
Ingestion: Ingestion in an unlikely route of exposure. If dust is swallowed, it may irritate the mouth and throat.
Skin contact: No adverse effects are expected.
Eye contact: Particulates may cause abrasive injury.

Chronic effects: Prolonged **i**nhalation of respirable crystalline silica may cause lung disease, silicosis, lung cancer and other effects as indicated below.

The method of exposure that can lead to the adverse health effects described below is inhalation.

A. SILICOSIS
Silicosis can exist in several forms, chronic (or ordinary), accelerated, or acute:

Chronic or Ordinary Silicosis is the most common form of silicosis, and can occur after many years (10 to 20 or more) of prolonged repeated inhalation of relatively low levels of airborne respirable crystalline silica dust. It is further defined as either simple or complicated silicosis. Simple silicosis is characterized by lung lesions (shown as radiographic opacities) less than 1 centimeter in diameter, primarily in the upper lung zones. Often, simple silicosis is not associated with symptoms, detectable changes in lung function or disability. Simple silicosis may be progressive and may develop into complicated silicosis or progressive massive fibrosis (PMF). Complicated silicosis or PMF is characterized by lung lesions (shown as radiographic opacities) greater than 1 centimeter in diameter. Complicated silicosis or PMF symptoms, if present, are shortness of breath and cough. Complicated silicosis or PMF may be associated with decreased lung function and may be disabling. Advanced complicated silicosis or PMF may lead to death. Advanced complicated silicosis or PMF can result in heart disease secondary to the lung disease (cor pumonale).

Accelerated Silicosis can occur with prolonged repeated inhalation of high concentrations of respirable crystalline silica over a relatively short period; the lung lesions can appear within five (5) years of initial exposure. Progression can be rapid. Accelerated silicosis is similar to chronic or ordinary silicosis, except that lung lesions appear earlier and progression is more rapid.

Acute Silicosis can occur after the repeated inhalation of very high concentrations of respirable crystalline silica over a short time period, sometimes as short as a few months. The symptoms of acute silicosis include progressive shortness of breath, fever, cough, weakness and weight loss. Acute silicosis is fatal.

B. CANCER
IARC - The International Agency for Research on Cancer ("IARC") concluded that “crystalline silica in the form of quartz or cristobalite dust is *carcinogenic to humans (Group 1)”*. For further information on the IARC evaluation, see IARC Monographs on the Evaluation of Carcinogenic Risks to Humans, Volume 100C,"A Review of Human Carcinogens: Arsenic, Metals, Fibres and Dusts " (2011).

NTP classifies “Silica, Crystalline (respirable size)” as Known to be a human carcinogen.

C. AUTOIMMUNE DISEASES
Several studies have reported excess cases of several autoimmune disorders -- scleroderma, systemic lupus erythematosus, rheumatoid arthritis -- among silica-exposed workers.

D. TUBERCULOSIS
Individuals with silicosis are at increased risk to develop pulmonary tuberculosis, if exposed to tuberculosis bacteria. Individuals with chronic silicosis have a three-fold higher risk of contracting tuberculosis than similar individuals without silicosis.

E. KIDNEY DISEASE
Several studies have reported excess cases of kidney diseases, including end stage renal disease, among silica-exposed workers. For additional information on the subject, the following may be consulted: "Kidney Disease and Silicosis”, Nephron, Volume 85, pp. 14-19 (2000).

F. NON-MALIGNANT RESPIRATORY DISEASES

The reader is referred to Section 3.5 of the NIOSH Special Hazard Review cited below for information concerning the association between exposure to crystalline silica and chronic bronchitis, emphysema and small airways disease. There are studies that disclose an association between dusts found in various mining occupations and non-malignant respiratory diseases, particularly among smokers. It is unclear whether the observed associations exist only with underlying silicosis, only among smokers, or result from exposure to mineral dusts generally (independent of the presence or absence of crystalline silica, or the level of crystalline silica in the dust).

Sources of information:
The ***NIOSH Hazard Review - Occupational Effects of Occupational Exposure to Respirable Crystalline Silica*** published in April 2002 summarizes and discusses the medical and epidemiological literature on the health risks and diseases associated with occupational exposures to respirable crystalline silica. The *NIOSH Hazard Review* is available from NIOSH - Publications Dissemination, 4676 Columbia Parkway, Cincinnati, OH 45226, or through the NIOSH web site, www.cdc.gov/niosh/topics/silica, then click on the link "NIOSH Hazard Review: Health Effects of Occupational Exposure to Respirable Crystalline Silica".

For a more recent review of the health effects of respirable crystalline silica, the reader may consult *Fishman's Pulmonary Diseases and Disorders*, Fourth Edition, Chapter 57. "Coal Workers' Lung Diseases and Silicosis".

The US Occupational Safety and Health Administration (OSHA) published a summary of respirable crystalline silica health effects in connection with OSHA's Proposed Rule regarding occupational exposure to respirable crystalline silica. The summary was published in the September 12, 2013 Federal Register, which can be found at www.federalregister.gov/articles/2013/09/12/2013-20997/occupational-exposure-to-respirable-crystalline-silica.

Numerical measures of toxicity:
Crystalline Silica (quartz): LD50 oral rat >22,500 mg/kg

12. ECOLOGICAL INFORMATION

Ecotoxicity: Crystalline silica (quartz) is not known to be ecotoxic.
Persistence and degradability: Silica is not degradable.
Bioaccumulative potential: Silica is not bioaccumulative.
Mobility in soil: Silica is not mobile in soil.
Other adverse effects: No data available.

13. DISPOSAL CONSIDERATIONS

Discard any product, residue, disposable container or liner in full compliance with national regulations.

14. TRANSPORT INFORMATION

UN number: None
UN proper shipping name: Not regulated
Transport hazard classes(es): None
Packing group, if applicable: None
Environmental hazards: None

Transport in bulk (according to Annex II of MARPOL 73/78 and the IBC Code): Not determined
Special precautions: None known.

15. REGULATORY INFORMATION

UNITED STATES (FEDERAL AND STATE)

TSCA Status: Crystalline silica (quartz) appears on the EPA TSCA inventory under the CAS No. 14808-60-7.

RCRA: This product is not classified as a hazardous waste under the Resource Conservation and Recovery Act, or its regulations, 40 CFR §261 et seq.

CERCLA: Crystalline silica (quartz) is not classified as a hazardous substance under regulations of the Comprehensive Environmental Response Compensation and Liability Act (CERCLA), 40 CFR §302.

Emergency Planning and Community Right to Know Act (SARA Title III): This product contains the following chemicals subject to SARA 302 or SARA 313 reporting: None above the de minimus concentrations.

Clean Air Act: Crystalline silica (quartz) mined and processed by U.S. Silica Company is not processed with or does not contain any Class I or Class II ozone depleting substances.

FDA: Silica is included in the list of substances that may be included in coatings used in food contact surfaces, 21 CFR §175.300(b)(3)(xxvi).

California Proposition 65: Crystalline silica (airborne particles of respirable size) is classified as a substance known to the State of California to be a carcinogen.

California Inhalation Reference Exposure Level (REL): California established a chronic non-cancer effect REL of 3 μg for silica (crystalline, respirable). A chronic REL is an airborne level of a substance at or below which no non-cancer health effects are anticipated in individuals indefinitely exposed to the substance at that level.

Massachusetts Toxic Use Reduction Act: Silica, crystalline (respirable size, <10 microns) is "toxic" for purposes of the Massachusetts Toxic Use Reduction Act.

Pennsylvania Worker and Community Right to Know Act: Quartz is a hazardous substance under the Act, but it is not a special hazardous substance or an environmental hazardous substance.

Texas Commission on Environmental Quality: The Texas CEQ has established chronic and acute Reference Values and short term and long term Effects Screening Levels for crystalline silica (quartz). The information can be accessed through www.tceq.texas.gov.

CANADA

Domestic Substances List: U. S. Silica Company products, as naturally occurring substances, are on the Canadian DSL.

WHMIS Classification: D2A

OTHER NATIONAL INVENTORIES

Australian Inventory of Chemical Substances (AICS): All of the components of this product are

listed on the AICS inventory or exempt from notification requirements.

China: Silica is listed on the IECSC inventory or exempt from notification requirements.

Japan Ministry of International Trade and Industry (MITI): All of the components of this product are existing chemical substances as defined in the Chemical Substance Control Law Registry Number 1-548.

Korea Existing Chemicals Inventory (KECI) (set up under the Toxic Chemical Control Law): Listed on the ECL with registry number 9212-5667.

New Zealand: Silica is listed on the HSNO inventory or exempt from notification requirements.

Philippines Inventory of Chemicals and Chemical Substances (PICCS): Listed for PICCS.

Taiwan: Silica is listed on the CSNN inventory or exempt from notification requirements.

16. OTHER INFORMATION

Date of preparation/revision: August 22, 2016

Hazardous Material Information System (HMIS):

Health *
Flammability 0
Physical Hazard 0
Protective Equipment E
* For further information on health effects, see Sections 2, 8 and 11 of this MSDS.

National Fire Protection Association (NFPA):

Health 0
Flammability 0
Instability 0

Web Sites with Information about Effects of Crystalline Silica Exposure:

The U. S. Silica Company web site will provide updated links to OSHA and NIOSH web sites addressing crystalline silica issues: www.ussilica.com, click on “Info Center”, then click on “Health & Safety”.

The Occupational Safety and Health Administration (OSHA) web site contains information on the OSHA standard related to respirable crystalline silica at https://www.osha.gov/silica/index.html.

The U.S. National Institute for Occupational Safety and Health (NIOSH) maintains a site with information about crystalline silica and its potential health effects at http://www.cdc.gov/niosh/topics/silica.

The IARC Monograph that includes crystalline silica, Volume 100C, can be accessed in PDF form at the IARC web site, http://monographs.iarc.fr/ENG/Monographs/PDFs/index.php.

U. S. Silica Company Disclaimer

The information and recommendations contained herein are based upon data believed to be up to-date and correct. However, no guarantee or warranty of any kind, express or implied, is made with respect to the information contained herein. We accept no responsibility and disclaim all liability for any

harmful effects that may be caused by purchase, resale, use or exposure to our silica. Customers and users of silica must comply with all applicable health and safety laws, regulations, and orders. In particular, they are under an obligation to carry out a risk assessment for the particular work places and to take adequate risk management measures in accordance with the national implementation legislation of EU Directives 89/391 and 98/24.

Crouse-Hinds by EATON

STL THREAD LUBRICANT

SAFETY DATA SHEET

Section 1 Product and Company Identification

Chemical Product Name:	STL Thread Lubricant
Product Description:	Thread Lubricant
CAS Number:	Mixture of 64742-65-0, 64742-62-7 and 4485-12-5
Synonyms:	NA
Recommended Use(s):	Thread lubricant for industrial applications
Company Information:	Eaton's Crouse-Hinds Business P.O. Box 4999 Syracuse, NY 13221-4999 USA
Telephone:	(315) 477-7000
Emergency Phone:	CHEMTREC (800) 424-9300

Section 2 Hazards Identification

OSHA HCS Status: This product is a hazardous chemical, as defined by OSHA at 29 CFR 1910.1200. Hazards identified are based on hazards of the ingredients. This product has not been fully tested.

Relevant Route of Exposure/Target Organs: Eyes, dermal

OSHA/GHS Signal Word and Hazard Statements:

WARNING: Causes mild skin irritation. Causes eye irritation.

OSHA/GHS Classification and Pictograms:

Skin irritation	Category 3
Eye irritation	Category 2B



OSHA/GHS Precautionary Statements:

Prevention

Wash hands thoroughly after handling.

Response

If skin irritation occurs: Get medical advice/attention. If in eyes: Rinse cautiously with water for several minutes. Remove contact lenses, if present and easy to do. Continue rinsing. If eye irritation persists: Get medical advice/attention.

GHS Hazard and Precautionary Statement Codes: See Section 16.

Section 3 Composition and Information on Ingredients

Component	CAS #	%
Petroleum oil	64742-65-0, 64742-62-7	>60
Lithium hydroxyl stearate (as lithium stearate)	4485-12-5	7

Section 4 First Aid Measures

Eye Contact: Holding eyelids away from the eyeballs, flush eyes thoroughly with lukewarm water for 15 minutes. Do not rub. If irritation persists, seek medical attention.

Skin Contact: Remove contaminated clothing and wash skin thoroughly with soap and water. Do not rub or scratch skin. If irritation persists, seek medical attention.

Inhalation: Not expected under normal conditions. If mists or degradation products are inhaled, remove to fresh air. Administer oxygen or artificial respiration as indicated and get immediate medical attention.

Ingestion: Not expected under normal conditions. If substantial amounts are ingested, consult a physician. Do not induce vomiting – If vomiting occurs, hold head beneath hips or place on left side with head down to reduce aspiration into lungs. Never give anything by mouth to an unconscious person.

Notes to Physician: High velocity injection under the skin may result in serious injury. If left untreated the affected area is subject to infection, disfigurement, lack of blood circulation and may require amputation. When dispensed by high pressure equipment this material can easily penetrate the skin and leave a bloodless puncture wound. Material injected into a finger can be deposited into the palm of the hand. Within 24-48 hours the patient may experience swelling, discoloration, and throbbing pain in the affected area. Immediate treatment by a surgical specialist is recommended.

Most Important Symptoms/Effects: Causes eye and skin irritation.

Indication of Immediate Medical Attention and Special Treatment Needed: Get medical attention immediately if product comes into contact with skin or eyes.

Section 5 Fire Fighting Measures

Special Fire Fighting Procedures: No unusual fire hazards.

Extinguishing Media: Dry chemical, carbon dioxide, foam, water fog. Foam and water fog are effective but may cause frothing. Do not use direct water stream as oil may spread and frothing can be violent. Continue to cool fire-exposed containers after flames are extinguished.

Protective Equipment: Firefighters should wear a NIOSH-approved, full-facepiece self-contained breathing apparatus (SCBA) operated in positive pressure mode and full turnout gear.

Unusual Fire or Explosion Hazards: Water may be used to keep fire-exposed containers cool and knock down vapors. Mists and sprays may be flammable at temperatures below normal flash point. No unusual fire hazards

Hazardous Combustion Products: Combustion may produce oxides of carbon, lithium compounds, and other oxidation products.

Section 6 Accidental Release Measures

Personal Protection: Wear appropriate protective equipment (i.e., rubber gloves, apron, etc.) as necessary to avoid contact. (See Section 8.)

Spill Procedures: Isolate area of spill and scoop up spilled material. Avoid walking through spilled material. Prevent spills from reaching waterways. Scoop or wipe up spilled material and place in clean container for later disposal. Thoroughly remove residue to prevent slipping.

Environmental Precautions and Cleanup Methods: Scoop up spilled material and place in clean container for later disposal. Do not release into waterways.

Section 7 Handling and Storage

Precautions: Store in a cool, dry, well-ventilated area away from ignition sources and incompatible materials. Keep away from heat, sparks, flames, and strong oxidizers when handling. Avoid skin and eye contact. Promptly change contaminated clothing and discard items that cannot be adequately cleaned (i.e., leather shoes). Wash thoroughly after handling and before meals and breaks. Empty containers may contain combustible product residue. Use appropriate precautions.

Storage: Store in a cool, dry, well-ventilated area. Keep containers closed.

Section 8 Exposure Controls and Personal Protection

Engineering Controls/Ventilation: General ventilation is acceptable for ordinary handling. Local exhaust may be needed to control air contaminants when product is heated or misting may occur.

Eye Protection: Wear eye and face protection. Wear safety goggles that meet ANSI Z87 standards and/or are tested and approved under appropriate government standards.

Respiratory Protection: None required under normal working conditions. If ventilation is insufficient to control air contaminants, select NIOSH approved respiratory protection according to the magnitude of exposure. Select and maintain respirators in accordance with OSHA 29 CFR 1910.134 (In Europe - Standard EN 149).

Skin Protection: Wear rubber gloves, apron, and other clothing as necessary to prevent skin contact.

Component	CAS #	OSHA/PEL	ACGIH/TLV
Petroleum oil	64742-65-0; 64742-62-7	5 mg/m^3* (oil mist)	TWA 5 mg/m^3 * (oil mist) STEL 10 mg/m^3 (oil mist) TWA 0.2 mg/m^3 (mineral oil mist - 2005 Notice of Intended Change)
Lithium hydroxy stearate (as lithium stearate)	4485-12-5	None established	10 mg/m^3 (For stearates, except stearates of toxic metals)

* As sampled by a method that does not collect vapor

Section 9 Physical and Chemical Properties

Color: Amber

Physical form: Semi-solid

Odor: Bland

Odor Characteristics: Not known

Odor Threshold: Not known

pH (undiluted): Not known

Flash Point: Not known

Flammability (solid, gas): Not known

Boiling Point: Greater than 260°C (500°F)

Evaporation Rate: Not known

Melting Point: Not known

Lower Explosive Limit: Not known

Upper Explosive Limit: Not known

Vapor Pressure: Less than 1 mmHg

Vapor Density: Greater than 1

Specific Gravity: 0.89

Solubility: Insoluble in water

Auto-ignition Temperature: Not known

Decomposition Temperature: Not known

Section 10 Stability and Reactivity

Stability: Stable under normal use and storage conditions.

Hazardous polymerization: Will not occur.

Oxidizing Properties: None known for product.

Hazardous Decomposition Products: Combustion may produce oxides of carbon and smaller amounts of toxic lithium, and other oxidation products.

Incompatibilities/Conditions to avoid: Avoid contact with strong oxidizers (e.g., liquid chlorine, peroxides).

Section 11 Toxicological Information

Acute Toxicity and Immediate Effects:

Oral LD50 (rat): Petroleum oil - >5 g/mg; Lithium hydroxyl stearate - >15 g/mg

Inhalation LC50 (rat): Petroleum oil - >2-4 mg/l

Dermal LD50: Petroleum oil - >2,000 mg/kg

Delayed and Chronic Effects: Chronic skin painting studies with severely solvent refined neutral oils did not produce evidence of skin cancer in mice.

Carcinogenicity:

IARC: No

NTP: No

OSHA: No

Mutagenicity: No data is available for this material.

Reproductive Toxicity: No data is available for this material.

Sensitization: No data is available for this material.

Section 12 Ecological Information

No data is available for this material. Avoid exposure to environment whenever possible. This mixture has not been tested for persistence or biodegradation. Water accommodated fractions (WAF) of highly refined base oils did not produce acute toxicity in fish (100-1000 mg/l), fresh water algae (500 mg/l) or daphnia (10,000 mg/l) in 48-96 hour LC50 studies. Based on component data, this mixture is not expected to be readily biodegradable nor acutely toxic.

Toxicity to Fish: NA

Ecotoxicological Information: NA

Chemical Fate Information: NA

Section 13 Disposal Considerations

Recycle, reclaim and dispose of in accordance with applicable local, state and federal regulations for used or waste petroleum grease/oil. According to 40 CFR 112, this product is an oil; therefore, the US EPA requires that spills which reach surface waters must be reported to the National Response Center (800-424-8802). Dispose of wastes per 40 CFR Parts 261/262 or 279, as appropriate. If disposed as sold, this product would not be RCRA-regulated as a hazardous waste but may be regulated by state or local rules.

Section 14 Transportation Information

Proper Shipping Name: Not classified as hazardous by DOT, IATA/ICAO and IMO.

Hazard Class: Not classified as hazardous by DOT, IATA/ICAO and IMO.

Packing Group: Not classified as hazardous by DOT, IATA/ICAO and IMO.

UN Number: Not classified as hazardous by DOT, IATA/ICAO and IMO.

Section 15 Regulatory Information

TSCA Inventory Status: All ingredients are listed on the TSCA inventory.

SARA Section 311/312 Hazard Categories: Immediate (acute) hazards

Section 313 Toxic Chemicals: This product does not contain ingredients subject to the reporting requirements of section 313 of the Emergency Planning and Community Right-To-Know Act (EPCRA) of 1986 and 40 CFR 372.

CERCLA RQ: This product does not contain ingredients subject to the reporting requirements of SARA 304 (CERCLA) and 302 (EHS).

California Proposition 65: This product does not contain chemicals known to the State of California to cause cancer.

WHMIS Classification: D2B

Section 16 Other Information

Revision Number: Revision 2

Revision Date: March 26, 2015

Explanation of Health Hazard Statements:

P332+P313 If skin irritation occurs: Get medical advice/attention.

P305+P351+P338 IF IN EYES: Rinse cautiously with water for several minutes. Remove contact lenses, if present and easy to do. Continue rinsing.

P337+P313 If eye irritation persists: Get medical advice/attention.

Abbreviations

CAS	Chemical Abstracts Service
CERCLA	Comprehensive Environmental Response Compensation and Liability Act
CFR	US Code of Federal Regulations
GHS	Globally Harmonized System
HCS	Hazard Communication Standard
HSIS	Australia Hazardous Substance Information System
IARC	International Agency for Research on Cancer
LD50	Lethal dose to 50% of exposed laboratory animals
NA	Not available
NIOSH	US National Institute of Occupational Safety and Health
NOEC	No observed effect concentration
NTP	US National Toxicology Program
OSHA	US Occupational Safety Health Administration
PEL	Permissible exposure limit
RQ	Reportable quantity
SARA	Superfund Amendments and Reauthorization Act
STEL	Short term exposure limit
TSCA	Toxic Substances Control Act
TWA	Time weighted average
UN	United Nations
WHMIS	Canada Workplace Hazardous Material Information System

DISCLAIMER

The information in this SAFETY DATA SHEET should be provided to all who will use, handle, store, transport, or otherwise be exposed to this material. This information has been prepared for the guidance of plant engineering, operations, and management, and for persons working with or handling this material. Eaton Crouse-Hinds believes this information to be reliable and up-to-date as of the date of publication, but makes no warranty that it is.

MATERIAL SAFETY DATA SHEET

MATERIAL IDENTITY: SuperTech -50 RV & Marine Antifreeze

SECTION 1 – PRODUCT IDENTIFICATION & COMPANY INFORMATION

Manufacturer: SPLASH PRODUCTS, INC.
51 East Maryland Avenue
St. Paul, MN 55117-4615

Telephone: (651) 489-8211

Facsimile: (651) 489-8247

Transportation Emergency for immediate information about a chemical or to seek assistance from a manufacturer): 1-800-535-5053

Date Updated: April 18, 2012

SECTION 2 - HAZARDOUS INGREDIENTS/IDENTITY INFORMATION

Hazardous Component*	Approximate Composition	OSHA Permissible Exposure Limit**	NIOSH REL	ACGIH Threshold Limit Value	IDLH (NIOSH)
Propylene Glycol - CAS 57-55-6	<2 percent by weight	NA	NA	NA	NA
Glycerin CAS# 56-81-5	<2 percent by weight	NA	NA	NA	NA
Additives CAS# 7758-11-4	<.001 percent By weight	NA	NA	NA	NA
ETHANOL CAS# 64-17-5 UN 1770	<13 percent By weight	200 ppm (260 mg/m^3) 8-Hour TWA (Skin)	1000ppm TWA; 1900mg/m3 TWA; 3300 ppm MIPLH	1000ppm TWA	NA
METHANOL CAS 67-56-1 UN 1230	<2 percent By weight	200 ppm (260 mg/m^3) 8-Hour TWA (Skin)	200 ppm (260 mg/m^3) 8-Hour TWA	200 ppm (260 mg/m^3) 8-Hour TWA	6,000 ppm (0.6 percent in air)
ETHYLENE GLYCOL BUTYL ETHER (BUTYL CELLOSOLVE) CAS 111-76-2	<1 percent By weight	25ppm (260 mg/m^3) 8-Hour TWA (Skin)	25ppm)	25ppm	NA

HMIS: HEALTH: 0 FLAMMABILITY: 2 REACTIVITY: 0 SPECIAL: NONE
RATING SCALE: 0=MINIMAL 1=SLIGHT 2=MODERATE 3=SERIOUS 4=SEVERE

SECTION 3 – HAZARDOUS IDENTIFICATION

Routes of Exposures: Eye Contact, Skin Contact, Inhalation, Ingestions
INGESTION: No significant adverse effects are expected under conditions of normal use. Repeated, prolonged exposure may cause slight flaking, tenderness and softening of the skin.
INHALATION: No significant adverse effects are expected under anticipated conditions of normal use. If effects do occur, refer to First Aid section.
EYE CONTACT: May cause minor eye irritation.
SKIN CONTACT: No significant adverse effects are expected under anticipated conditions of normal use. Prolonged or repeated contact without rinsing with water may cause irritation.

MATERIAL SAFETY DATA SHEET

MATERIAL IDENTITY: SuperTech -50 RV & Marine Antifreeze

SECTION 4 – FIRST AID MEASURES

INGESTION: Do not give liquid if victim is unconscious or drowsy. If large quantity is swallowed, induce vomiting. Obtain emergency medical attention.

INHALATION: If exposed to excessive levels of vapors. Remove to fresh air. Give oxygen or artificial respiration as needed. Obtain emergency medical attention.

EYE CONTACT: Immediately flush eye with plenty of cool, running water. Remove contact lenses if applicable, and continue flushing for at least 15 minutes, holding eyelids apart to ensure thorough rinsing of the entire eye. Get medical attention if pain, blinking, tears or redness persists.

SKIN CONTACT: Product is not expected to present a significant skin hazard under normal use.

SECTION 5 – FIRE FIGHTING MEASURES

FLASH POINT: 120°F

FLAMMABLE LIMITS: In air % by volume, LEL: 6% UEL: 36%

EXTINGUISHING MEDIA: Use of dry chemical, carbon dioxide, water spray, alcohol foam, fog spray.

SPECIAL FIRE FIGHTING PROCEDURES: Use fog or spray to prevent flooding. Be prepared to use MSHA-NIOSH self contained breathing apparatus and protecting clothing.

FIRE AND EXPLOSION HAZARDS: None known.

SECTION 6 – ACCIDENTAL RELEASE MEASURES

RESPONSE TO SPILLS: Eliminate all sources of ignition immediately. Mop up residue and rinse area thoroughly with water. Contain run-off with absorbent material such as sand or clay and diking. Transfer liquid and absorbent material in approved container. Flush and mop area with water allowing to air dry. Keep spill out of sewers and open bodies of water.

SECTION 7 – HANDLING AND STORAGE

HANDLING PRECAUTIONS: Follow directions on label. Wash after handling and before eating.

STORAGE PRECAUTIONS: Store container upright. Tighten cap securely. Avoid heat, sparks, and flames. Protect container from physical damage. **KEEP AWAY FROM CHILDREN**

MATERIAL SAFETY DATA SHEET

MATERIAL IDENTITY: SuperTech -50 RV & Marine Antifreeze

SECTION 8 – EXPOSURE CONTROLS / PERSONAL PROTECTION

HYGIENIC PRACTICES: Avoid breathing vapors. Use with adequate ventilation. Wash thoroughly with soap and water after handling. Follow direction on label.

SKIN PROTECTION: Rubber or neoprene gloves and additional protection including impervious boots, apron, or coveralls, as needed in areas of unusual exposure.

EYE PROTECTION: Use chemical safety goggles. Maintain eye wash fountain and quick-drench facilities in work area.

SECTION 9 – PHYSICAL AND CHEMICAL PROPERTIES

APPEARANCE: Clear pink liquid

ODOR: None

pH: 8.2

SPECIFIC GRAVITY: (water =1): 1.01

SOLUBILITY IN WATER: 100%

BOILING POINT: 370°F

FREEZE POINT: 9°F

VAPOR PRESSURE (mm of Hg) <.01 @20C (68F)

VAPOR DENSITY (Air =1): 2.6

EVAPORATION RATE (BuAc=1): Slight

SECTION 10 – STABILITY AND REACTIVITY

CONDITIONS TO AVOID: HEAT, SPARKS, FLAMES. Strong alkalis, strong oxidizing agents.

INCOMPATIBILITY: Strong oxidizing agents such as nitrates and sulfuric acid.

HAZARDOUS DECOMPOSITION PRODUCTS: Burning can product carbon monoxide and /or carbon dioxide.

HAZARDOUS POLYMERIZATION: will not occur.

SECTION 11 – TOXICOLOGICAL INFORMATION

SKIN: The LD50 for skin absorption in rabbits is >10000 mg/kg

Ingestion: The oral LD50 for rats is 20000-34000 mg/kg

MUTAGENICITY: In vitro mutagenicity studies were negative. Animal mutagenicity studies were negative.

MATERIAL SAFETY DATA SHEET

MATERIAL IDENTITY: SuperTech -50 RV & Marine Antifreeze

SECTION 12 – ECOLOGICAL INFORMATION

Ecotoxicology: Based largely or completely on information for similar material(s), i.e., propylene glycol. Material is practically non-toxic to aquatic organisms on acute bases (LC50 greater than 100 mg/L in most sensitive species).
Acute LC50 for fathead minnow is 4699-54900 mg/L
Acute LC50 for rainbow trout 44000 mg/L

ENVIRONMENTAL TOXICITY: This material is expected to be non- toxic to aquatic life.

SECTION 13 – DISPOSAL CONSIDERATIONS

WASTE DISPOSAL METHOD: Dispose in accordance with federal, state and local regulations.

SECTION 14 – TRANSPORT INFORMATION

(U.S. D.O.T.) – U.S. Department of Transportation:
PROPER SHIPPING NAME: Consumer Commodity ORM-D
Exceptions: Per 49 CFR 173.150 (pg III, inner package not over 5.0 L)

SECTION 15 – REGULATORY INFORMATION

WHMIS classification for product is NA

This product has been classified in accordance with the hazard criteria for the CFR and MSDS contains all the information required by the CFR

SECTION 16 – OTHER INFORMATION

Information in this MSDS was obtained from sources which we believe are reliable. However, the information is provided without any warranty, express or implied, regarding its correctness. The condition or methods of handling, storage, use or disposal of the product are beyond our control and may be beyond our knowledge. For this and other reasons, we do not assume responsibility and expressly disclaim liability for loss, damage or expense arising out of or in any way connected with the handling, storage, use or disposal of the product. This MSDS was prepared and is to be used only for this product.

Appendix D – Arc Flash Hazard Analysis

To be attached at time of service hookup.

Appendix E – Site Safety Forms

1. HASP Acknowledgement
2. Site Visitor Logbook
3. Daily Job Hazard Analysis
4. PID Calibration Log
5. Air Monitoring Log
6. Site Work Zone Log
7. Skid Steer/Telehandler Inspection Checklists
8. Lockout-Tagout Form
9. Incident/Near Miss Report Form

Health and Safety Plan Acknowledgement

Project: _____

Location: _____

My signature below indicates that I have read or am familiar with the contents of the Site-Specific Health and Safety Plan (HASP), and that I understand and will comply with its requirements.			
Date / Time	Name (Print)	Name (Signature)	Company / Organization

Site Visitor Logbook

Project: _____

Location: _____

Date / Time IN	Date / Time OUT	Name (Print)	Company / Organization	HASP Acknowledgement* (Initial)

*My initial indicates that I have read or am familiar with the contents of the Site-Specific Health and Safety Plan (HASP), and that I understand and will comply with its requirements

Daily Job Hazard Analysis

Project: _____ Date: _____

Location: _____ Time: _____

Today's Expected Job Tasks		JSA	Applicable JSA Reviewed or Hazard Control Taken
1		☐	
2		☐	
3		☐	
4		☐	
5		☐	
6		☐	
7		☐	
8		☐	

Hazards	Check	Hazard Control Taken
Electrical / Shock	☐	
Respiratory / Chemical Exposure	☐	
Hot Surfaces / Burns	☐	
Fluid Pressure / Stored Energy	☐	
Hand or Power Tools	☐	
Slips, Trips, and Falls	☐	
Subsurface / Overhead Utilities	☐	
Excavation / Trenching	☐	
Heights / Fall Protection	☐	
Forklift / Powered Industrial Trucks	☐	
Vehicle / Pedestrian Traffic	☐	
Heat Stress / Cold Stress	☐	
Other	☐	

Comments

Personnel Acknowledgement (Print Name and Organization)	
1	6
2	7
3	8
4	9
5	10

Operator or Supervisor (Print):	SSHO
Operator or Supervisor (Signature):	SSHO

PID Calibration Log

Project: _____

Location: _____

Date / Time	Instrument	Lamp (eV)	Standard	Zero Cal (ppm)	Span Cal (ppm)	Bump Test (ppm)	Technician (Print / Initial)

Air Monitoring Log

Project: _____ Instrument: _____

Location: _____ PPE: _____

Activity: _____

Date / Time	Reading	Comments

Supervisor (Print / Initial): _____

Site Work Zone Log

Project: _____ Date: _____

Location: _____ Start Time: _____

Activity: _____ End Time: _____

Map of Established Work Zones

Person: _____ Zone: _____

Person: _____ Zone: _____

Person: _____ Zone: _____

Person: _____ Zone: _____

Person: _____ Zone: _____

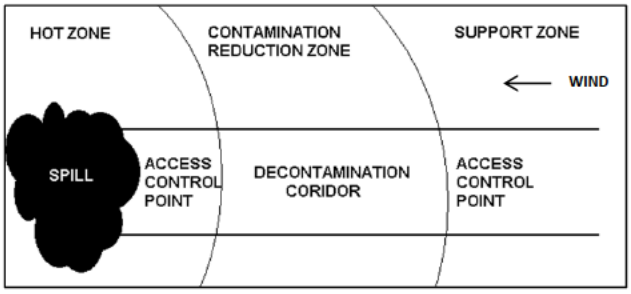

Exclusion Zone PPE: A B C D (circle one)

Contaminant Reduction Zone PPE: A B C D (circle one)

Monitoring: PID O_2 Other (circle applicable)

Boundary Identifiaction: Tape Cones Other (circle applicable)

Decontamination Procedure: Physical Chemical Other (circle applicable)

Comments: _____

_____

Print / Initial: _____

Telehandler / Forklift / Skid Steer Inspection Checklist

Project: _____ Date: _____

Location: _____ Time: _____

Equipment Type			
☐ Telehandler ☐ Forklift ☐ Skid Steer ☐ Other			
Manufacturer	Serial Number		Machine Hours
Items to be Inspected	Satisfactory	Defective	Comments
Forks, Pins, Backrest, Lift System	☐	☐	
Tires, Rims, Guards, Covers	☐	☐	
Stabilizer Arms, Cylinders, Pads	☐	☐	
Steps, Handholds, Warnings	☐	☐	
Operator Manual, Fire Extinguisher	☐	☐	
Electric Lines, Battery, Terminals	☐	☐	
Hoses, Belts, Hydraulic Lines	☐	☐	
Fuel Tank, Engine Oil, Air Filter	☐	☐	
Engine Coolant, Radiator, Brake Fluid	☐	☐	
Rollover / Fallover Protection Structure	☐	☐	
Seat, Seatbelt, Windows, Mirrors, Wipers	☐	☐	
Horn, Backup Alarm, Lights	☐	☐	
Controls, Gauges, Labels, Nameplates	☐	☐	
Accelerator, Steering, Brake Controls	☐	☐	
Tilt, Hoist, Lowering Controls	☐	☐	
Notes / Observations			

Inspected by: (Print / Initial) _____

Lockout-Tagout Form



Project: _____ Location: _____

Equipment Name	Equipment Number	Equipment Location

Potential Hazards

☐ Electrical	☐ Pneumatic	☐ Mechanical	☐ Multiple Lockouts
☐ Hydraulic	☐ Chemical	☐ Combustibles	☐ Confined Space

Methods of Neutralizing Hazards

☐ Relieve Pressure	☐ Block/Bleed	☐ Lockout-Tagout	☐ Other
☐ Disconnect Lines	☐ Set Fire Watch	☐ Confined Space Permit	

Permits Required

☐ Safe Work	☐ Hot Work	☐ Line Blanking	☐ Other
☐ Confined Space			

Energy Types and Magnitudes	Isolating Device Type and Location

Specific Shutdown Procedures

Testing Procedures that Equipment is Isolated and Stored Energy is Dissipated

Lockout Start (Date/Time)	Lockout End (Date/Time)	Isolating Device	Authorized Person

Checked by: (Print / Initial) _____ Date: _____

Incident/Near Miss Report Form

Part A: Incident Type and location

**Check the app icable box below*

	An Incident is an event that interrupts normal procedures or precipitates a crisis
	A near miss is an event that potentially could have caused injury to a person or damage to equipment, facilities, or materials
Location:	
Date of incident:	**Date reported:**

Injury				No Injury	
First Aid Health Care (Medical Aid)				Hazardous Situation	
Incident Type					
Illness/Injury	Vehicle	Environmental	Property Damage	Public Contact	Other

Part B: Persons Involved in Incident

Reported by:

First name:		**Last Name:**
Phone Number:	**Cell Phone Number:**	**Email Address:**
Occupation/Place of Employment		

Affected Person(s):

First name:		**Last Name:**
Phone Number:	**Cell Phone Number:**	**Email Address:**
Occupation/Place of Employment		

Part C: Incident Details *(Attach Additional Sheets if insufficient space)*

Actual Location?	
Activity at the time? (Example lifting bags of concrete etc.)	
Describe the incident (Include name of chemicals, process or equipment involved)	
Continued on back/attached sheet?	☐YES ☐NO
Contributing Factors? (example equipment failure, wet floor etc.)	
What Actions were taken Immediately?	
What will prevent re-occurrence?	
To your knowledge, has the employee had a previous similar injury or has this similar hazardous situation been reported before?	☐YES ☐NO ☐N/A

ACKNOWLEDGEMENT: by signing below you certify that the information provided herein is complete and accurate to the best of your knowledge.

Affected: _____ Date: _____ Signature: _____

Supervisor: _____ Date: _____ Signature: _____

Witness: _____ Date: _____ Signature: _____

Purpose of the Incident Report

This incident form must be completed within 24 hours of the occurrence. This report form has been designed to document details of the incident and to ensure that management is aware of and has followed up on the incident.

How to fill out this form

Ensure that all fields are completed and information is entered correctly and the details of the incident are documented as thoroughly as possible.
If you need to attach additional documents please check the box “continued on back/attached sheet in the describe the incident section of the form.
The form is to be signed by the worker (if they are able) or by the person filling out the form before sending to management
If you seek medical attention after submitting please notify your supervisor immediately

Attachment C
Equipment Cut Sheets

SECTION 7200
ENGINEERING SPECIFICATION: AIR STRIPPER BLOWER

PART 1— GENERAL

1.1 SCOPE

1.1.1 The manufacturer shall furnish a blower for use with a low profile, multi-tray Air Stripper.

1.2 PROCESS DESCRIPTION

1.2.1 The blower impeller, driven by the direct-coupled motor, pressurizes air and supplies it to the stripper with sufficient flow and pressure to generate a froth of bubbles in the water contained by up to six stripper trays.

1.3 SUBMITTALS

1.3.1 Manufacturer shall submit the following with the bid:

1.3.1.1 Product data for selected model, including rated output capacity, electrical specifications, and warranty coverage. See attached Data Sheet for full specification.

PART 2 — PRODUCTS

2.1 GENERAL

2.1.1 The blower shall be a direct drive pressure blower (scroll type or a direct drive regenerative type blower. See Data Sheet for model number. Equipment shall be supplied by QED Environmental Systems, Inc. and represented by _____ or pre-approved equivalent.

2.1.2 Blower design and performance shall meet requirements specified on the Data Sheet attached to this specification.

2.2 EQUIPMENT DESIGN REQUIREMENTS-DIRECT DRIVE BLOWER

2.2.1 Standard product design shall include one pressure blower with all-welded steel housing and aluminum wheel, with the following specifications:

REV 010122 Copyright 2001 QED

2.2.1.1 Blower shall be an industrial quality model rated for continuous duty, certified and licensed to bear the AMCA (Air Movement and Control Association, Inc.) Seal, in accordance with AMCA Publication 211.

2.2.1.2 Blower shall be factory balanced and motor-coupled.

2.2.1.3 Blower shall be supplied with an air flow throttle, factory installed preset to match stripper system requirements, and labeled to indicate settings for clean operation, turn-up range, and overload conditions.

2.2.1.4 Blower inlet shall be equipped with a 90° elbow serving as an inlet safety guard, ready for connection to an air inlet duct if desired.

2.2.1.5 Blower shall include a built-in water drain.

2.2.2 Standard product design shall include one industrial quality (such as Baldor, GE or preapproved equal) electric motor, with the following specifications:

2.2.2.1 Blower-motor unit shall be a compact, direct-drive arrangement with the blower wheel mounted directly on motorshaft, to minimize the number of moving parts and for ease of maintenance.

2.2.2.2 Motor must meet the system's electrical voltage/phase and explosion-proof requirements (if applicable). See attached Data Sheet for specifications.

2.2.3 Standard product design shall include outlet ducting to connect the blower outlet flange to the stripper inlet ducting. Duct size and design shall be sufficient to allow the blower to operate at full capacity. Duct design shall include a section routed high to prevent water from reaching the blower in the event of a system shutdown.

2.2.4 Blower/motor unit shall be primed and painted.

2.3 EQUIPMENT DESIGN REQUIREMENTS-REGENERATIVE BLOWER

2.3.1 Standard product design shall include one regenerative blower with cast rather than fabricated aluminum impeller (for ruggedness), housing and cover, meeting the following specifications:

REV 010122 Copyright 2001 QED

2.3.1.1 Blower shall be an industrial quality model rated for continuous duty at the required workload.

2.3.1.2 Blower shall be factory balanced and motor-coupled. Blower shall be equipped with a Teflon shaft seal, final assembly leak tested to less than 1cc/sec @ 3 psi.

2.3.1.3 Blower shall be supplied with an air flow throttle, factory installed preset to match stripper system requirements, and labeled to indicate settings for clean operation, turn-up range, and overload conditions.

2.3.1.4 Blower shall be equipped with an inlet filter and integral intake and exhaust mufflers, held in place with a screen (spring or wire hold-down is not acceptable), to minimize operating noise levels.

2.3.1.5 Inlet and outlet flanges shall be of cast iron; soft metals, such as aluminum are not allowed.

2.3.2 Standard product design shall include one industrial quality UL and CSA approved electric motor, with the following specification:

2.3.2.1 Blower-motor unit shall be a maintenance-free, compact direct-drive arrangement.

2.3.2.2 Motor must meet the system's electrical voltage/phase and explosion-proof requirements (if applicable). See attached Data Sheet for specifications.

2.3.2.3 Motor must be rated for continuous duty and carry full rated load at temperatures below insulation limits; motor ball bearings shall be double sealed with a rated life of not less than 20,000 hours continuous duty at the maximum rated blower load.

2.3.3 Standard product design shall include outlet ducting to connect the blower outlet flange to the stripper inlet ducting. Duct size and design shall be sufficient to allow the blower to operate at full capacity. Duct design shall include a section routed high to prevent water from reaching the blower in the event of a system shutdown.

2.3.4 Blower/motor unit shall be primed and painted.

2.4 OPERATION AND PERFORMANCE PARAMETERS

2.4.1 Blower shall be sized to allow turn-up to overcome fouling of the stripper, extending the time between cleanings. See Data Sheet for output curves.

REV 010122 Copyright 2001 QED

ENGINEERING DATA SHEET
BLOWERS: ALL MODELS FOR AIR STRIPPERS

REF — ITEMS and SPECIFICATIONS

2.1.1, 2.2.2.2 2.3.2.2 — EZ-STACKER STRIPPER BLOWERS

Model No.	Type*	Used on Stripper	Electrical Specifications	Max CFM	Motor HP
805188	R	2.4P	115-230V/1PH/TEFC	145	2.0
805189	R	2.4P	115-230V/1PH/EXP	145	2.0
805190	R	2.4P	230/460V/3PH/TEFC	145	2.0
805191	R	2.4P	230/460V/3PH/EXP	145	2.0
805192	R	2.6P	115-230V/1PH/TEFC	180	3.0
805193	R	2.6P	115-230V/1PH/EXP	180	3.0
805194	R	2.6P	230/460V/3PH/TEFC	180	3.0
805195	R	2.6P	230/460V/3PH/EXP	180	3.0
807034	P	4.4P,4.6P	230/460V/3PH/TEFC	600	5.0
807035	P	4.4P,4.6P	230/1PH/TEFC	600	5.0
807036	P	4.4P,4.6P	230/460V/3PH/EXP	600	5.0

* R-Regenerative type, P-Pressure type

2.1.1, 2.2.2.2 2.3.2.2 — EZ-TRAY STRIPPER BLOWERS

Model No.	Type*	Used on Stripper	Electrical Specifications	Max CFM	Motor HP
807034	P	4.4,6.4,8.4	230/460V/3PH/TEFC	600	5.0
807035	P	4.4,6.4,8.4	115-230V/1PH/TEFC	600	5.0
807036	P	4.4,6.4,8.4	230/460V/3PH/EXP	600	5.0
807037	P	12.4,16.4	230/460V/3PH/TEFC	1100	7.5
807038	P	12.4,16.4	230V/1PH/TEFC	1100	7.5
807039	P	12.4,16.4	230/460V/3PH/EXP	1100	7.5
807040	P	24.4	230/460V/3PH/TEFC	2200	15.0
807041	P	24.4	230/460V/3PH/EXP	2200	15.0
807139	P	4.6,6.6,8.6	230/460V/3PH/TEFC	500	5.0
807140	P	4.6,6.6,8.6	115-230V/1PH/TEFC	500	5.0
807141	P	4.6,6.6,8.6	230/460V/3PH/EXP	500	5.0
807142	P	12.6,16.6	230/460V/3PH/TEFC	1000	7.5
807143	P	12.6,16.6	230V/1PH/TEFC	1000	7.5
807144	P	12.6,16.6	230/460V/3PH/EXP	1000	7.5
807145	P	24.6	230/460V/3PH/TEFC	1700	15.0
807146	P	24.6	230/460V/3PH/EXP	1700	15.0

* P-Pressure type

(Note: To use this Data Sheet in a specification, either reproduce the whole table above and indicate which model number is being specified, or include only the data for the model selected.)

REV 010122 Copyright 2001 QED

2.4.1 BLOWER OUTPUT CURVES

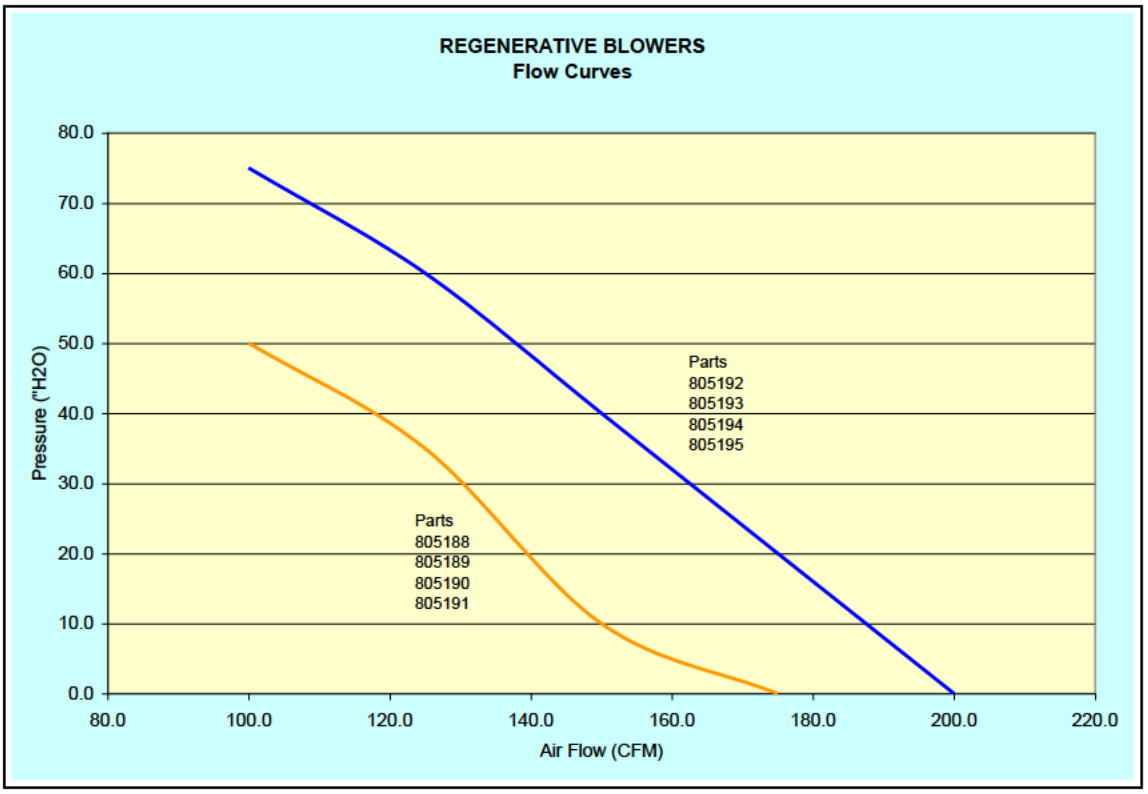

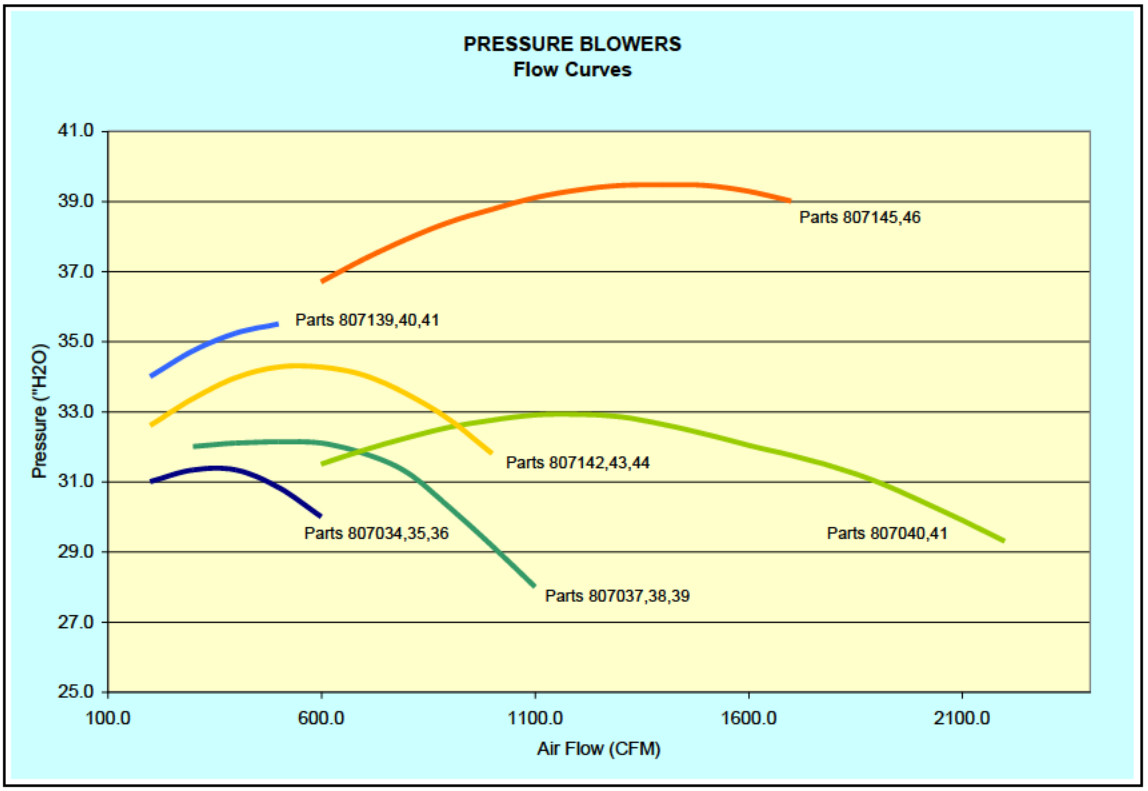

REV 010122 Copyright 2001 QED

SECTION 0200
ENGINEERING SPECIFICATION: CONTROL PANEL

PART 1— GENERAL

1.1 SCOPE

1.1.1 Manufacturer shall furnish an industrial control panel for use with a ground water treatment system.

1.2 DESCRIPTION

1.2.1 The control panel controls all motor-driven and other electrically operated equipment comprising the remediation system. The various components are fully interlocked for fail-safe operation. The operation of all driven components can be manually overridden for equipment startup or troubleshooting. The status of all components and alarms is indicated via illuminated devices located on the door of the enclosure, or on the swing-out panel of dead-front panels.

1.3 SUBMITTALS

1.3.1 Manufacturer shall submit the following with the bid:

1.3.1.1 Product data for selected model, including standard features, options, and warranty coverage. See attached Data Sheet for full specification.

PART 2 — PRODUCTS

2.1 GENERAL

2.1.1 System shall be manufactured by QED Environmental Systems, Inc. and represented by _____ or pre-approved equivalent.

2.1.2 Control panel design and performance shall meet requirements specified on the attached Data Sheet.

2.2 EQUIPMENT DESIGN REQUIREMENTS

2.2.1 Control panel shall be designed and built to UL508 Industrial Control Panel requirements.

REV 3/13/15 COPYRIGHT 2015 QED

2.2.2 Control panel shall be manufactured in a listed Industrial Control Panel Manufacturing Facility.

2.2.3 Control panel enclosure shall be a Type 4 as required for the application.

2.2.4 Control panel components shall be industrial quality

- IEC style motor starters
- fuses
- transformers
- timing relays
- intrinsically safe components (as required)

2.2.5 Control panel shall include the following list of features as standard equipment:

Control panel transformer (if required)
Green illuminated selector switch for control and run indicator for each motor
Red pilot light for each alarm condition
Main disconnect switch, externally accessible
IEC-style motor starters
Mounting kit
Alarm interlock dry contacts
Intrinsically safe components and circuits if site conditions require

2.2.6 The following options shall be available (see Data Sheet for specifications):

Alarm beacon and/or horn
Blank front panel
Control interlocks for other on-site equipment
Lightning/surge protection
Motor elapsed-time meters
Panel heater

2.3 INSTALLATION

2.3.1 Control panel shall be installed in accordance with manufacturer's recommendations, including but not limited to the following:

2.3.1.1 The control panel shall be installed by a licensed electrician. The National Electrical Code and all applicable state and local codes shall be followed when installing this equipment. This includes but is not limited to any provisions for intrinsically safe or explosion-proof wiring. The installation shall be executed in a neat and workmanlike manner.

REV 3/13/15 COPYRIGHT 2015 QED

2.3.1.2 At no time shall any individual tamper with or change any of the wiring in the control panel without the knowledge and consent of QED personnel. The installer shall only land wires on the field terminals provided and install or remove any jumpers as shown and indicated on the control schematics to achieve proper operation. Any changes made to the panel wiring other than those just mentioned or those approved by QED personnel, in writing, will result in the voiding of any warranty associated with the control panel or any of the connected equipment.

 COPYRIGHT 2015 QED

ENGINEERING DATA SHEET
CONTROL PANELS

REF	ITEM	SPECIFICATION(S)
1.3.1.1	GENERAL PRODUCT DATA	
	Model No.	None (each panel is custom manufactured)
	Panel size:	24”H x 24”W x 12”D to 48”H x 36”W x 12”D (approximate size of typical panel for stripper; panels for larger multi-pump systems can be larger)
	Site classification:	❒ Class I, Division 1 ❒ Class I, Division 2 ❒ Unclassified
	Site power:	_____ V _____ Hz _____ Ph
	Motors in system:	

Qty	HP	Voltage	Phase	Where used (i.e. pump, blower)

	Interlock w/other equipment: (i.e., catalytic oxidizer, SVE, etc.)	❒ Yes ❒ No _____ Equipment type
	Remote mount:	❒ Yes ❒ No
2.2.6	Options:	Alarm beacon Check if included ❒ Alarm horn Check if included ❒ Blank front panel Check if included ❒ Lightning/surge protection Check if included ❒ Motor elapsed-time meter (_____ hours x _____) Check if included ❒ Panel heater (_____ watts, w/thermostat) Check if included ❒

 COPYRIGHT 2015 QED

SECTION 0401
ENGINEERING SPECIFICATION: PROCESS SENSORS (AIR STRIPPER SYSTEM)

PART 1— GENERAL

1.1 SCOPE

1.1.1 The manufacturer shall furnish process sensors for use in an air stripper system.

1.2 PROCESS DESCRIPTION

1.2.1 Differential pressure switches, gauges, liquid level sensors, liquid flow sensors, and air flow sensors are installed at appropriate points in the air stripper process and linked to a control panel to provide system monitoring capabilities and input for automatic control.

1.3 SUBMITTALS

1.3.1 Manufacturer shall submit the following with the bid:

1.3.1.1 Product data for selected models, including operating ranges, materials, electrical specifications, and warranty coverage. See attached Data Sheet for full specifications.

PART 2 — PRODUCTS

2.1 GENERAL

2.1.1 Equipment shall be supplied by QED Environmental Systems, Inc. and represented by _____ or pre-approved equivalent.

2.1.2 Design and performance of all process sensors shall meet requirements listed in this specification and on the attached Data Sheet.

2.2 EQUIPMENT DESIGN REQUIREMENTS

2.2.1 A sump differential pressure gauge shall be provided as standard equipment to monitor air stripper performance and indicate when cleaning is necessary due to fouling of stripper tray orifices. It shall meet the following specifications:

REV 010122 Copyright 2001 QED

2.2.1.1 Gauge shall be diaphragm-actuated dial type, 4 3/4” O.D., with white dial, black graduations, and pointer zero adjustment. Case shall be die cut aluminum with anti-corrosion coating and break-resistant, clear plastic face. Gauge shall operate with an accuracy of plus or minus 2% of full scale over a temperature range of 20° to 140° F. See Data Sheet for working pressure range and other specifications

2.2.2 A sump sight gauge shall be provided as standard equipment, to meet the following specifications:

2.2.2.1 Gauge shall be constructed of clear plastic tube connected to the sump water drain to allow continuous visual sump water level monitoring. See Data Sheet for specifications.

2.2.3 Sump high level switch and discharge pump on/off switch shall be available separately or together as an air stripper system option. (Note: sump high level switch is highly recommended to prevent stripper overflow and blower damage in the event of a drain or discharge pump malfunction.) They shall meet the following specifications:

2.2.3.1 These switches shall be UL and CSA listed, capable of operating with an adjustable liquid level differential, from a minimum of plus or minus 12” or greater. Design shall prevent false tripping due to turbulence. PVC jacketing shall provide a resistance to chemical attack. Mercury switches shall not be used. See Data Sheet for full specifications.

2.2.4 Sump low pressure and high pressure switches shall be available as air stripper system options. (Note: low pressure switch is highly recommended to provide process system shutdown in the event of blower or gasket failure.) They shall meet the following specifications:

2.2.4.1 These switches shall be diaphragm operated, explosion-proof differential pressure switches, UL and CSA listed, approved for use in Class I Groups C and D, Class II Groups E, F and G, and Class III hazardous atmospheres. See Data Sheet for full specifications.

2.2.5 An air flow indicator shall be available as a system option, to meet the following specifications:

2.2.5.1 Air flow sensor shall be a Pitot Tube type. Design shall meet AMCA and ASHRAE codes and require no calibration. Construction shall be of type 304 stainless steel.

 Copyright 2001 QED

2.2.5.2 Air flow gauge shall be a differential pressure gauge, diaphragm-actuated dial type, 4-3/4” O.D., with white dial, black graduations, and pointer zero adjustment. Case shall be die cut aluminum with anti-corrosion coating and break-resistant, clear plastic face. Gauge shall operate with an accuracy of plus or minus 2% of full range over a temperature range of 20° to 140° F. See Data Sheet for working pressure range and other specifications.

2.2.6 A liquid flow meter shall be available as a system option. Liquid flow meter shall be either an in-line electronic meter with digital readout or a mechanical nutating disc meter, to meet the following specifications:

2.2.6.1 Electronic meter shall sense the rotation of an internal turbine and convert it into flow measurements via an on-board microprocessor. It must be capable of accuracy to within plus or minus 1.5%. Flow shall be displayed on a 6-digit LCD panel, with operation accessed via two buttons. See Data Sheet for specifications.

2.2.6.2 A nutating disc meter shall measure flow via positive displacement; it must be accurate to within plus or minus 1.5% over full range, with an extended 50:1 flow range. Housing shall be of bronze, with only three moving parts to simplify maintenance. See Data Sheet for full specifications.

REV 010122 Copyright 2001 QED

ENGINEERING DATA SHEET
PROCESS SENSORS (AIR STRIPPER SYSTEM)

REF	ITEM	SPECIFICATION(S)
2.2.1.1	Pressure gauge	
	Model No.:	EZPGAUGE
	Operating pressure range:	0-50" H_2O
	Minor divisions:	1.0" H_2O
	Pressure connections:	1/8" NPT female
2.2.2.1	Sump site gauge:	
	Water drain connection:	1" NPT
2.2.3.1	Sump high level switch, pump on/off switch	
	Model No.:	800065
	Electrical contact capacity:	15A, 120/250 VAC, 50/60 Hz
	Wetted materials:	Body — polypropylene
		Electric power cable — PVC
2.2.4.1	Sump low pressure switch, sump high pressure switch	
	Model Nos.:	EZPLOW, EZPHIGH
	Operating pressure ranges:	Low = 0.4-1.6" H_2O
		High = 0.5-2.0 PSI
	Electrical rating:	15A, 125/250/480 VAC, 60 Hz
	Wiring connections:	3 screw type; common, norm. open, norm. closed
	Pressure connections:	1/8" NPT female
2.2.5.1	Air flow sensor	
	Model No.:	EZ-AIRFLOW; Pitot-type
	Tube diameter:	1/8"
	Insertion length:	variable

2.2.5.2 Air flow gauge

Model Number	Used On Stripper	Nominal Air Flow (cfm)	Stack Diam. (in)	Nominal Air Velocity (fpm)	Range (" H_2O)
2000-00AV	2.XP	140	4	1604	0-0.25
2001AV	4.XP	260	4	2979	0-1
2000-0AV	4.X	210	4	2406	0-0.5
2000-00AV	6.X	320	6	1630	0-0.25
2000-0AV	8.X	420	6	2139	0-0.5
2001AV	12.X	600	6	3056	0-1
2002AV	16.X	850	6	4329	0-2
2001AV	24.X	1300	8	3724	0-1

(Note: indicate stripper model number for this specification.)

REV 010122 Copyright 2001 QED

2.2.6.1 Electronic liquid flow meter:

Meter Model No.	Stripper GPM	Meter I.D.(in)	Meter connections	Power supply
CPFLOW50	3-50	1	NPT female	2 internal Lithium batteries*
CPFLOW300	30-300	2	NPT female	2 internal Lithium batteries*

*Minimum actual run time = 4,000 hours

2.2.6.2 Mechanical liquid flow meter

Meter Model No.	Meter Size (in)	Flow Range (GPM)	End Connections	Max. pressure Loss (PSI)
805011	5/8	1/2-25	1/2” NPT-male	15
805012	3/4	1/2-30	3/4” NPT-male	15

REV 010122 Copyright 2001 QED

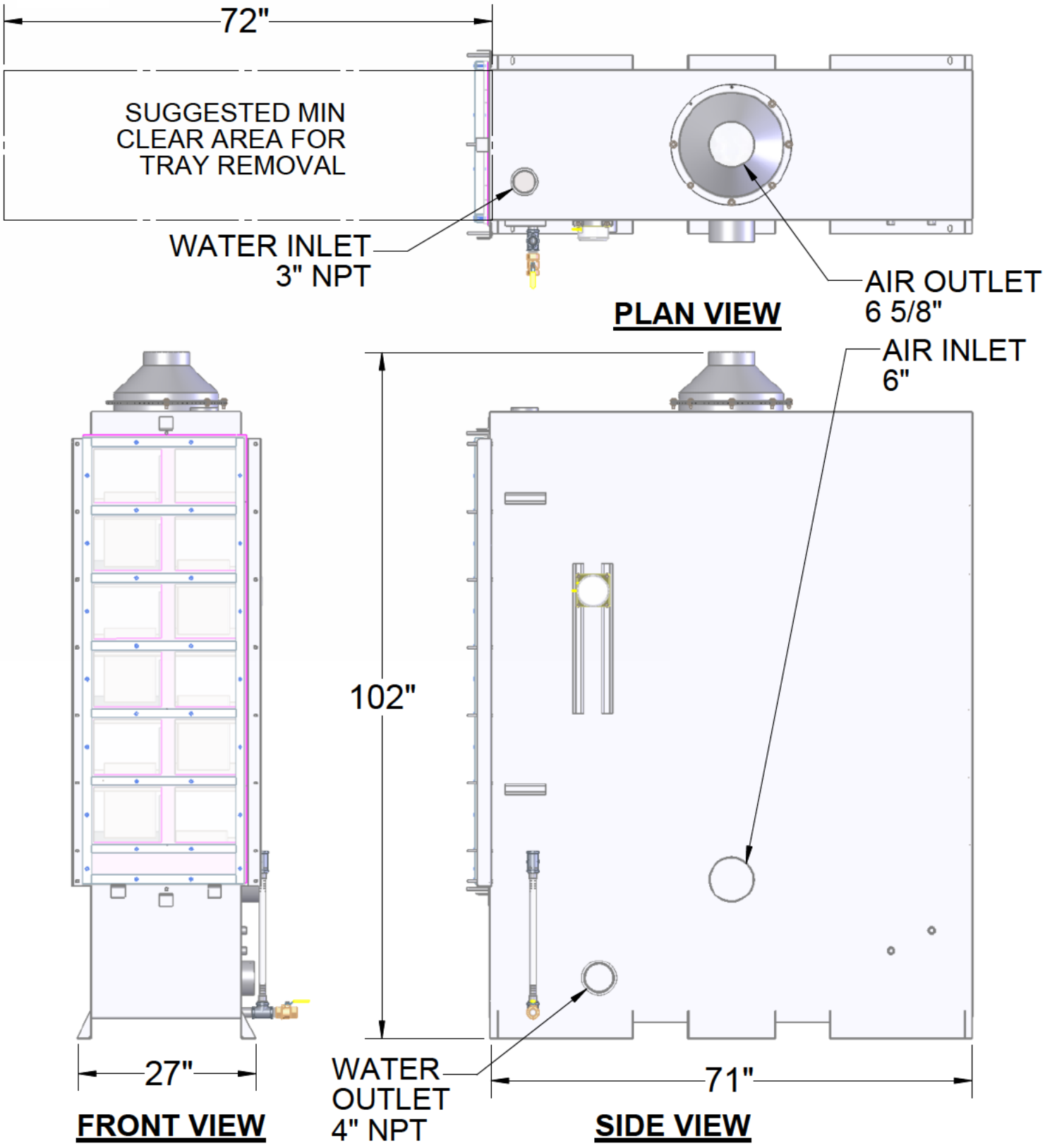

EZ-12.6SS (AIR STRIPPER ONLY)

FOR MORE SPECIFICATIONS CLICK ON:

http://www.qedenv.com/Products/Airstrippers_VOC_Removal/Air_Stripper_Specifications/

NOT TO SCALE

NOT FOR CONSTRUCTION, FOR REFERENCE ONLY

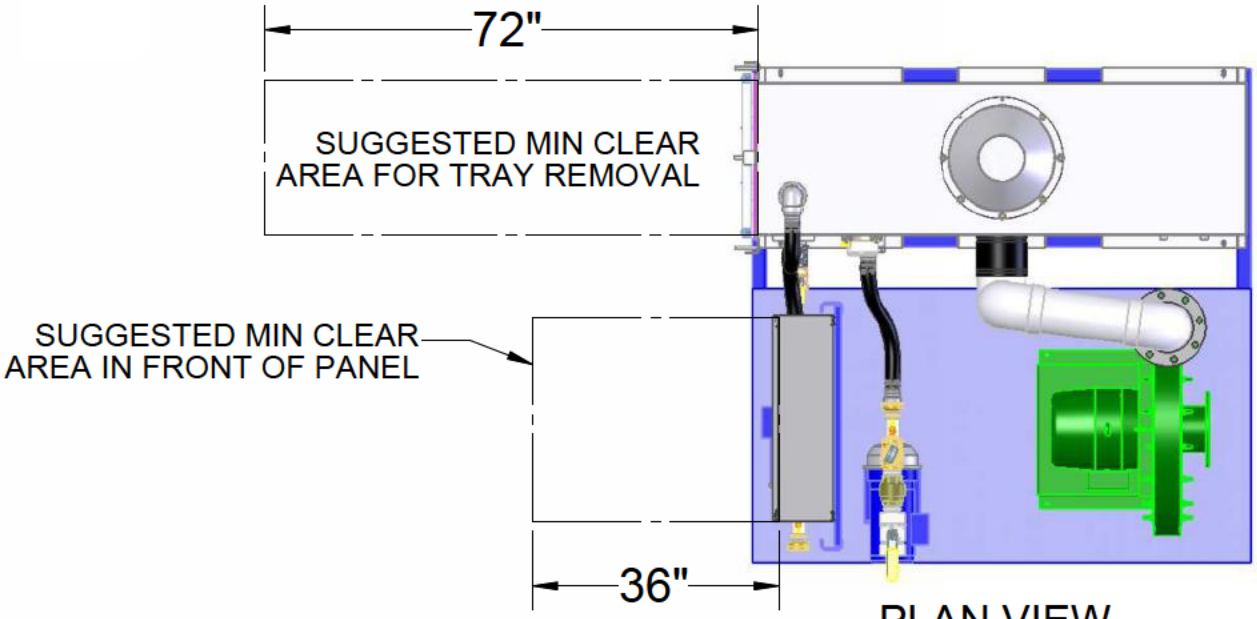

PLAN VIEW

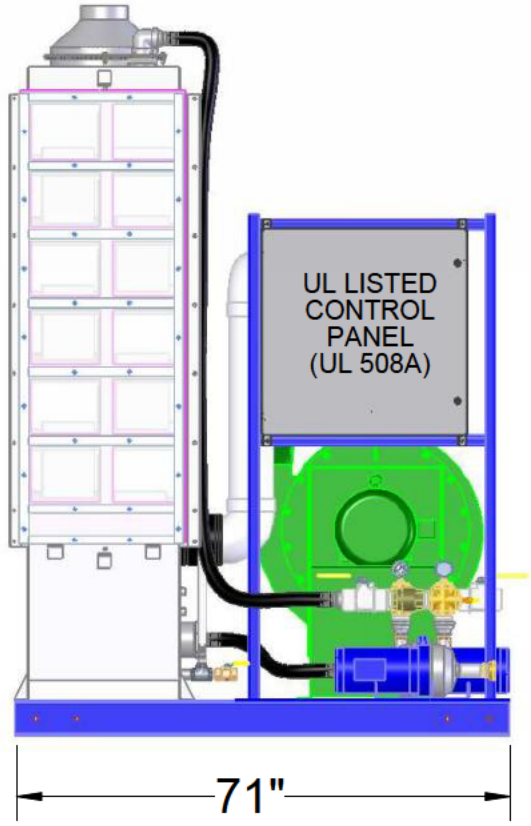

FRONT VIEW

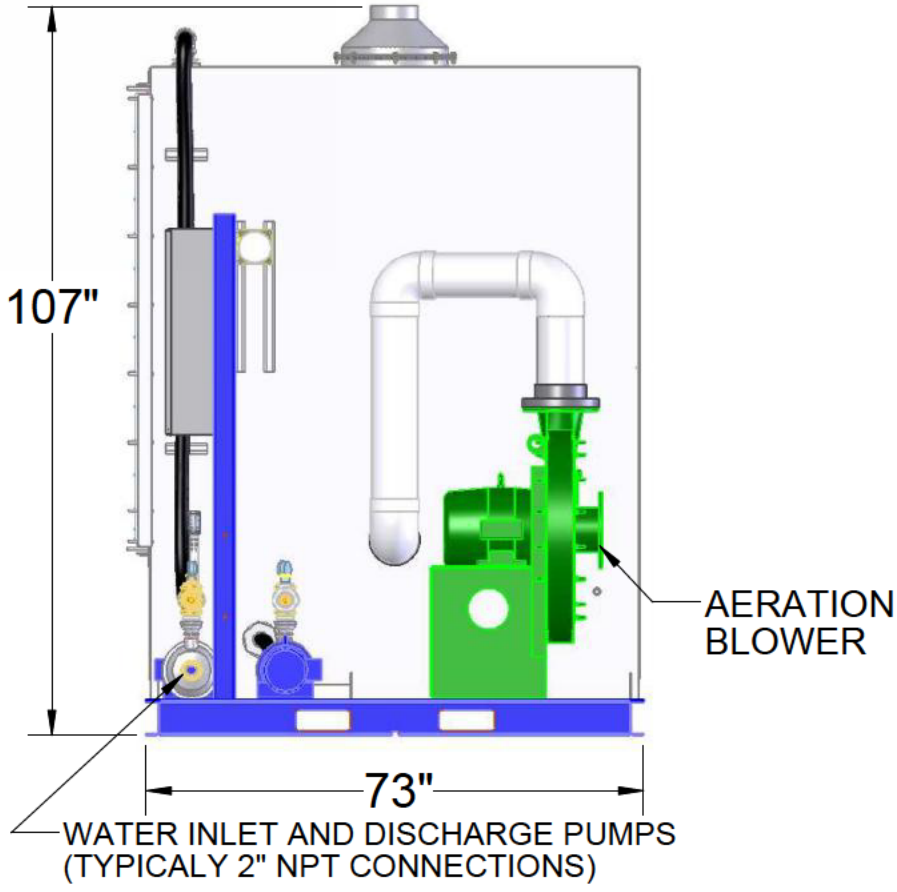

SIDE VIEW

EZ-12.6SS

EXAMPLE OF A SKID SYSTEM WITH CONTROL PANEL, PUMPS, AND BLOWER
CONTACT QED FOR INFORMATION ON ALL OPTIONS.
NOT TO SCALE

NOT FOR CONSTRUCTION, FOR REFERENCE ONLY

FILTRATION SPECIFICATIONS

Filter: Model 8 Basket Strainers and Bag Filters

Model 8 strainer/filter housings are made in 2 sizes and 2 pressure ratings, and can serve as basket strainers (for particle retention down to 74 micron size) or as bag filters (for particle retention down to 1 micron size).



FEATURES

- Low pressure drops
- Permanently piped housings
- Covers are o-ring sealed
- Carbon steel, 304 or 316 stainless steel construction
- All housings are electropolished to resist adhesion of dirt and scale
- Adjustable-height legs
- Large-area, heavy-duty baskets
- O-ring seals: Buna N, EPR, Fluoroelastomer, PTFE
- Two pressure ratings: 150 and 300
- Pipe sizes 2-inch to 4-inch, NPT or flanged
- Two basket depths: 15 or 30 inches (nominal)
- ASME code stamp available

OPTIONS

- Duplex Units Available
- Special Alloys
- Sanitary Construction
- Different Outlet Connections
- Higher Pressure Ratings
- Extra-Length Legs
- Heat Jacketing
- Liquid Displacers for Easier Servicing
- NSF 61 Certified

OPERATION

Unfiltered liquid enters the housing above the bag or basket and flows through. Solids are contained inside the bag or basket, where they are easily removed when the unit is serviced. A basket bail is pushed down by the closed cover to hold the basket against a positive stop in the housing. A radial seal prevents bypass of unfiltered liquid.

FILTRATION SPECIFICATIONS

Filter: Model 8 Basket Strainers and Bag Filters

PRESSURE DROP DATA

Basket strainers and bag filters are usually selected so that the pressure drop does not exceed 2 psi when they are clean. Higher pressure drops may be tolerated when contaminant loading is low. Bag change-out should occur at 15 psid.

The pressure drop data is determined by the steps below:

FOLLOW THESE EASY STEPS:

1. Using the desired pipe size and approximate flow rate, determine the pressure drop from the appropriate graph.
2. Multiply the pressure drop obtained in step 1 by the viscosity correction factor found in the accompanying table. This is the adjusted pressure drop for all baskets, without filter bags.
3. Add the pressure drop for the bag filter housing.

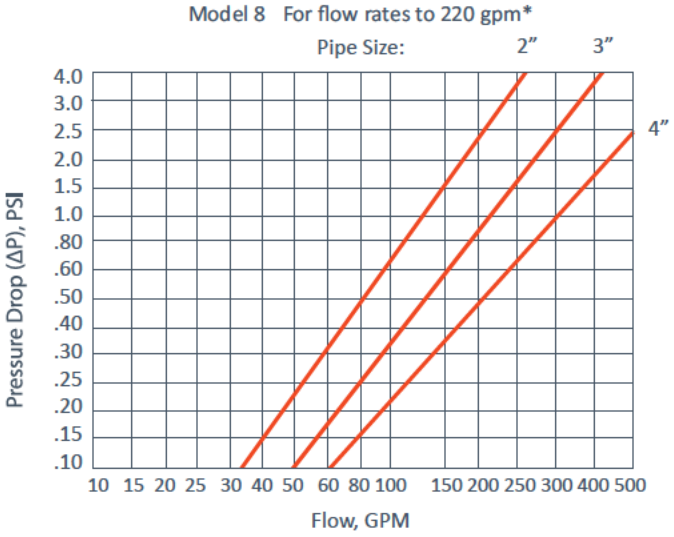

*Based on housing only. Fluid viscosity, bag filter used, and expected dirt loading should be considered when sizing a filter.



Eyenut covers with filter bag or basket.

Filter bags are specified and sold separately.

	VISCOSITY, CPS								
BAG STYLE	1 (H_2O)	50	100	200	400	600	800	1000	2000
ALL UNLINED BASKETS	.65	.85	1.00	1.10	1.20	1.40	1.50	1.60	1.80
40-MESH LINED	.73	.95	1.20	1.40	1.50	1.80	1.90	2.00	2.30
60-MESH LINED	.77	1.00	1.30	1.60	1.70	2.10	2.20	2.30	2.80
80-MESH LINED	.93	1.20	1.50	1.90	2.10	2.40	2.60	2.80	3.50
100-MESH LINED	1.00	1.30	1.60	2.20	2.40	2.70	3.00	3.30	4.40
200-MESH LINED	1.30	1.70	2.10	3.00	3.40	3.80	4.40	5.00	6.80

Model 8 - Dimensions

COVER TYPE

Eyenut Cover
150 PSIG - 3 Bolt Design

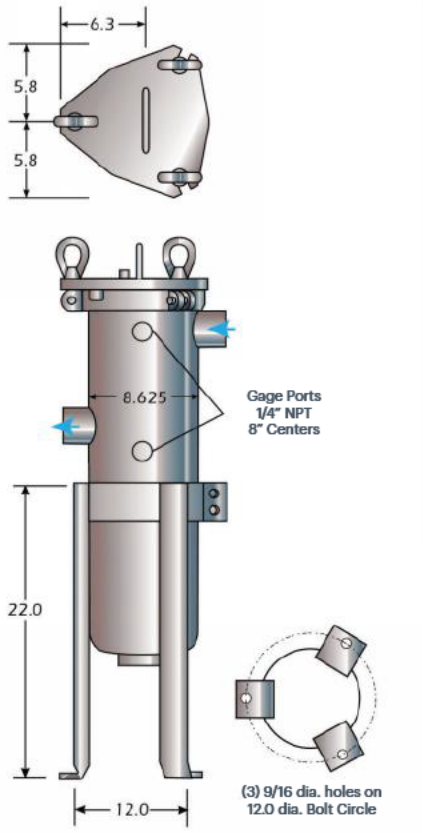

A clearance distance equal to the basket depth must be available above the housing for basket removal.

OUTLET STYLES

Threaded NPT or
Flanged Connections

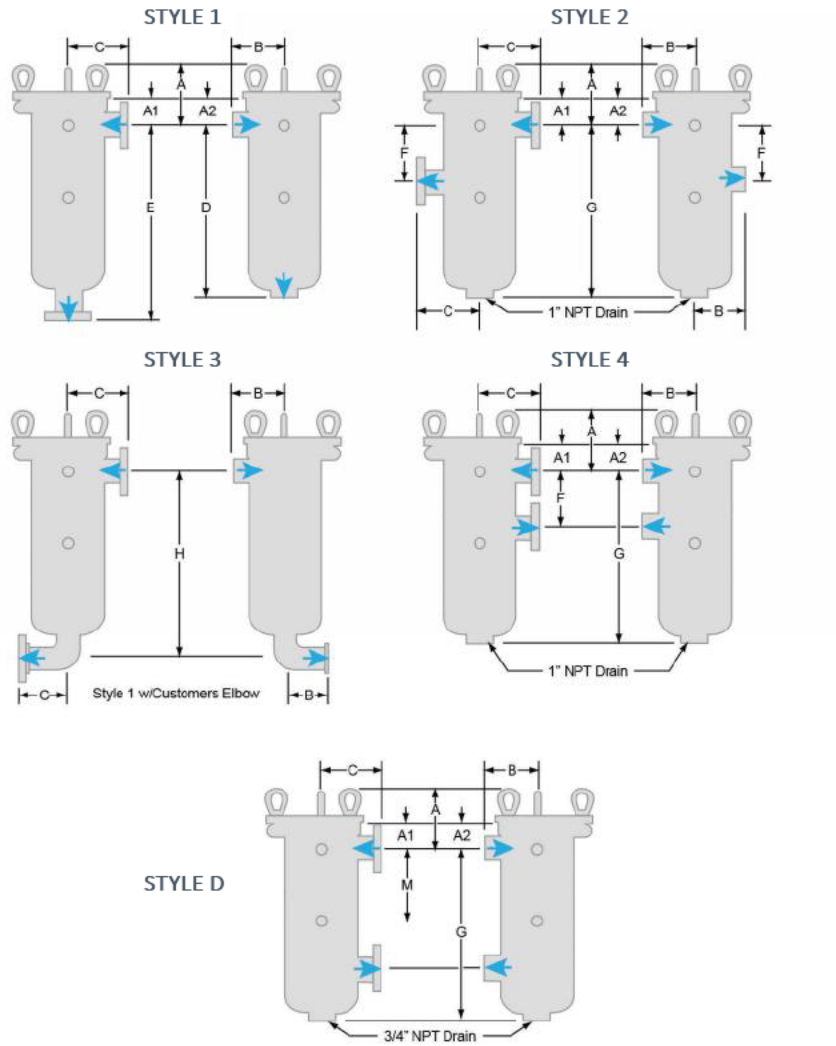

Dimensions (IN) 150 PSIG Design

Model	Pipe Size	A	A1	A2	B	C	D	E	F	G	H	I	J	K	L	M
8-15	2	9.1	5.4	2.9	5.9	7.5	20.6	23.4	8.0	20.9	22.8	3.25	5.0	4.06	4.25	N/A
	3	9.1	5.4	3.7	6.8	7.5	21.3	23.4	8.0	20.9	24.3	3.25	7.25	6.12	4.25	N/A
	4	9.1	5.4	5.0	6.8	8.6	21.3	23.9	8.0	20.9	25.6	3.25	9.0	7.75	4.25	N/A
8-30	2	9.1	5.4	2.9	5.9	7.5	35.6	38.4	8.0	35.9	37.8	3.25	5.0	4.06	4.25	15.0
	3	9.1	5.4	3.7	6.8	7.5	36.3	38.4	8.0	35.9	39.3	3.25	7.25	6.12	4.25	17.0
	4	9.1	5.4	5.0	6.8	8.6	36.3	38.9	8.0	35.9	40.6	3.25	9.0	7.75	4.25	18.0

Dimensions are for reference only and should not be used for hard plumbing. Request a drawing from filters@rosedaleproducts.com

Model 8 - Dimensions

COVER TYPE

Eyenut Cover
300 PSIG - 6 Bolt Design

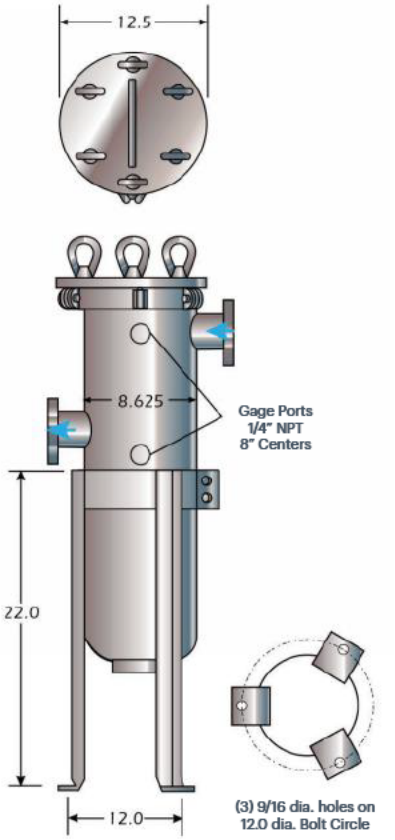

A clearance distance equal to the basket depth must be available above the housing for basket removal.

OUTLET STYLES

Threaded NPT or
Flanged Connections

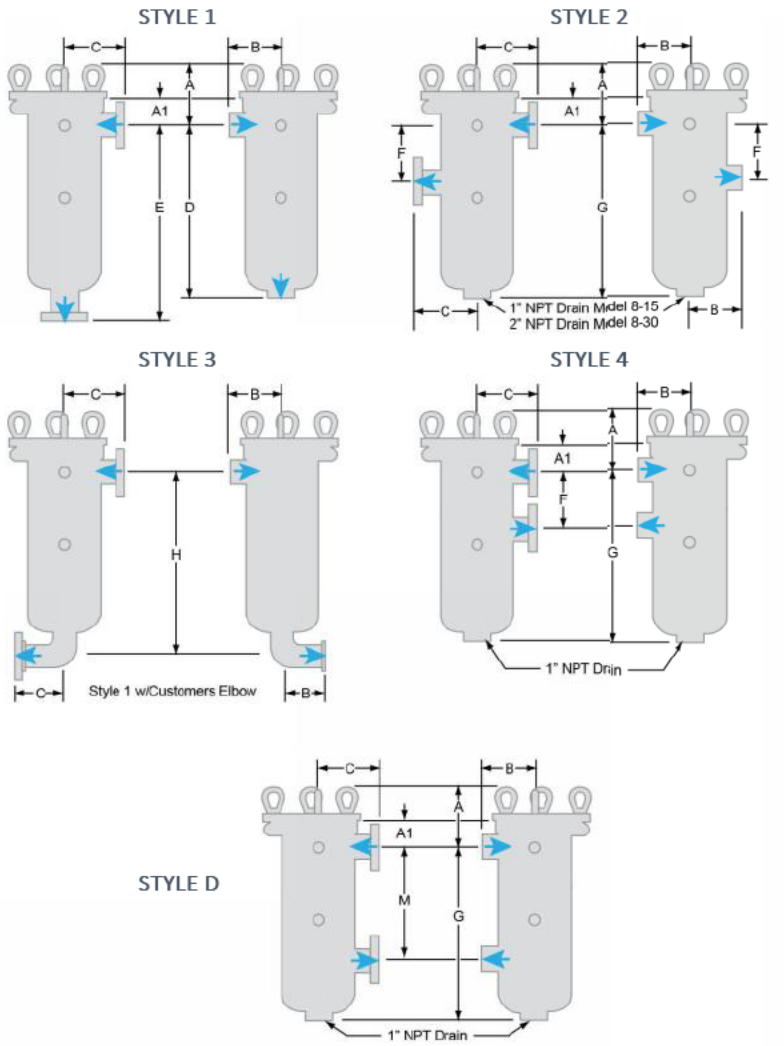

Dimensions (IN) 300 PSIG Design

Model	Pipe Size	A	A1	B	C	D	E	F	G	H	I	J	K	L	M
8-15	2	9.25	5.4	5.9	7.5	20.6	23.4	8.0	20.9	22.8	3.25	5.0	4.06	4.25	N/A
	3	9.25	5.4	6.8	7.5	21.3	23.4	8.0	20.9	24.3	3.25	7.25	6.12	4.25	N/A
	4	9.25	5.4	6.8	8.6	21.3	23.9	8.0	20.9	25.6	3.25	9.0	7.75	4.25	N/A
8-30	2	9.25	5.4	5.9	7.5	35.6	38.4	8.0	35.9	37.8	3.25	5.0	4.06	4.25	15.0
	3	9.25	5.4	6.8	7.5	36.3	38.4	8.0	35.9	39.3	3.25	7.25	6.12	4.25	17.0
	4	9.25	5.4	6.8	8.6	36.3	38.9	8.0	35.9	40.6	3.25	9.0	7.75	4.25	18.0

Dimensions are for reference only and should not be used for hard plumbing. Request a drawing from filters@rosedaleproducts.com

Model 8 Housing Code - How to Order

CONFIGURE YOUR PART NUMBER (EXAMPLE: 8-30-3P-1-300-C-B-S-M20-D-C-NSF)

A	B	C	D	E	F	G	H	I	J	K	L	M
MODEL NUMBER	HOUSING SIZE	PIPE SIZE	OUTLET STYLE	PRESSURE RATING	HOUSING MATERIAL	COVER SEAL	BASKET SEAL	BASKET TYPE	BASKET, MEDIA SIZE	DISPLACER	ASME CODE STAMP	NSF 61 CERTIFIED

A	MODEL NUMBER	CODE
	EYENUT COVER	8

B	HOUSING SIZE	CODE
	15 INCH	15
	30 INCH	30

C	PIPE SIZE, NPT AND FLANGED[1]	CODE
	2-IN NPT OR FLANGE	2P / 2F
	3-IN NPT OR FLANGE	3P / 3F
	4-IN FLANGE	4F

D	OUTLET STYLE	CODE
	BOTTOM	1
	SIDE HIGH	2
	BOTTOM ELBOW	3
	SAME SIDE HIGH	4
	SAME SIDE LOW	D

E	PRESSURE RATING[1]	CODE
	150 PSI	150
	300 PSI	300

F	HOUSING MATERIAL	CODE
	CARBON STEEL	C
	304 STAINLESS STEEL	S
	316 STAINLESS STEEL	S316

G	COVER SEAL	CODE
	BUNA N	B
	ETHYLENE PROPYLENE	E
	FLUOROELASTOMER	V
	FKM/FEP	TEV
	PTFE (SOLID WHITE) (6 BOLT COVER)	TSW

H	BASKET SEAL	CODE
	SEAL REQUIRED	S

I	BASKET TYPE	CODE
	FILTER BAG BASKET, 9/64 PERFORATIONS[2]	PB
	STRAINER BASKET, PERFORATED METAL	P
	FILTER BAG BASKET, PERFORATED, MESH LINED[2]	BM
	STRAINER BASKET, PERFORATED, MESH LINED	M
	FSI/POLYLOC	POLY

J	BASKET, MEDIA SIZE	CODE	
	NO SYMBOL FOR PB BASKET		
	PERFORATION DIAMETERS (P BASKETS)	PERF SIZES	MESH SIZES
		1/4	20
		3/16	40
	MESH SIZES (M AND BM BASKETS)	9/64	60
		3/32	80
		1/16	100

K	DISPLACER	CODE
	DISPLACER	D

L	ASME CODE STAMP	CODE
	CODE STAMP	C

M	NSF 61 CERTIFIED	CODE
	NSF 61	NSF

1. Higher pressure ratings and alternative connections available. Consult factory.
2. Filter bags are specified separately.

RITE-TEMP MFG.

MODEL: RTS-1604 SPEC

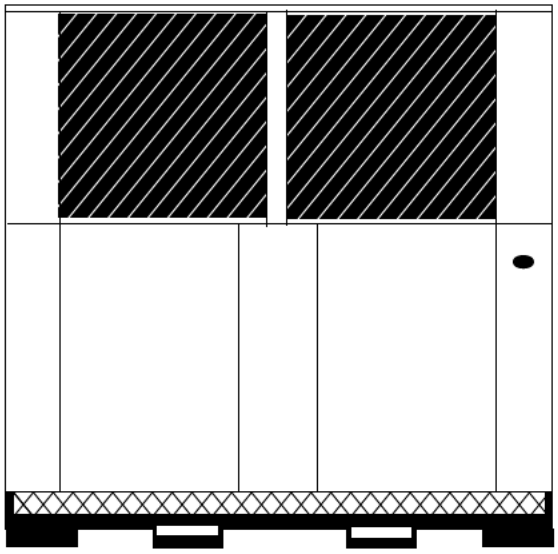

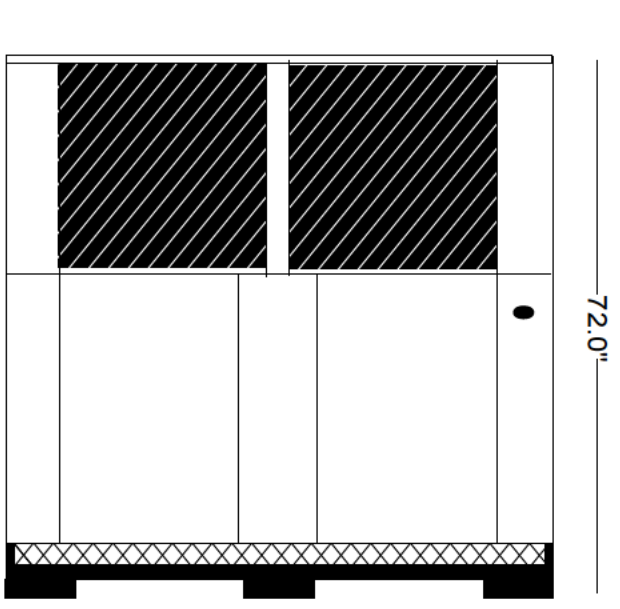

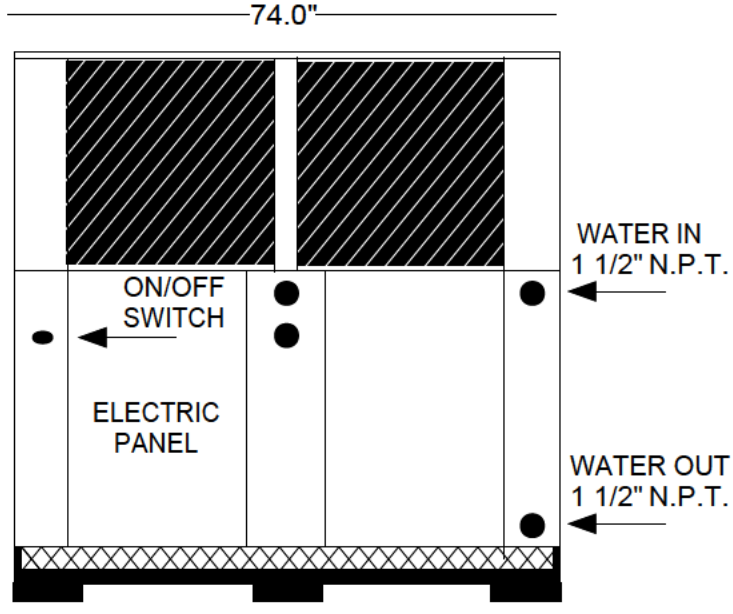

SPECIFICATIONS:

- 192,000 BTU/HR heat removal - 95F degree ambient, 45F degree water out.
- Electrical: 460 / 60HZ / 3 PH 24 volt electrical panel.
- Run Load: 43.95 Amps.
- Minimum Circuit Ampacity: 46; Maximum Circuit Ampacity: 83.
- ETL/CSA Laboratory Approved: ETL # 63122 & CAN/CSA NO. 236
- (2) 40 gallon, 16 gage, 304 stainless steel closed evaporator tank with coil inside.
- 1.5 HP water pump: 30 - 40 GPM, 35 - 45 PSI.
- Low ambient start-up package (standard).
- R422D Refrigerant.
- Analog water temperature and pressure gauges.
- Air-cooled condenser.
- Cabinet: 18 and 20 gage Phos coat galvanized steel finished with polyester powder coat.
- Base frame: 1/8 - inch angle & channel iron.
- Multi-compressor design: (4) 4 ton Copeland Hermetic (5 - year warranty).
- Independent multi-compressor operation for staged loads.
- Approximate crated weight: 2400 LBS.
- Physical dimensions: 74" wide, 74" long, and 72" tall.

NOT TO SCALE

COOLING TOWERS

AT

Advanced Technology (AT) Series

The Industry's Smartest Induced Draft, Counterflow Cooling Towers



ENGINEERING DATA

evapco® for LIFE

MOTOR AND DRIVE 5 Year WARRANTY

CTI CERTIFIED

*Mark owned by the Cooling Technology Institute

Advanced Technology Series
AT
Engineering Data & Dimensions

Nomenclature

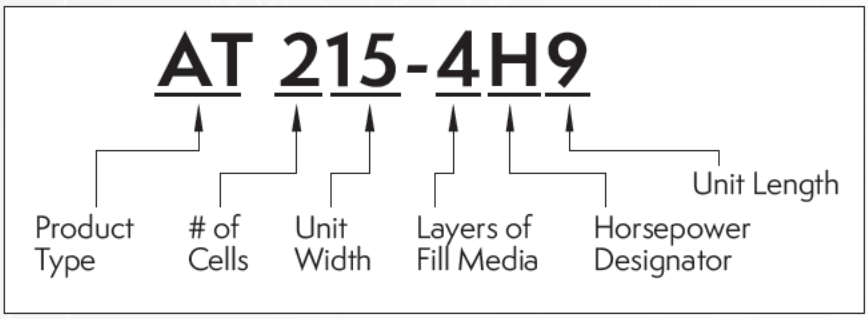

Product Type
AT – Indicates an Advanced Technology (AT) tower

# of Cells
Determined by the number of inlet connections, can be 1, 2, 3, or 4

Unit Width
The total width of the unit in feet, all cells included. The value is rounded to the next whole number.

Layers of Fill Media
Determined by the number of 1 foot tall fill layers. Can be 2, 3, 4 or 5.

Horsepower Designator
Determined by the horsepower per fan motor. Available from E = 2 HP to R = 100 HP.

Unit Length
The total length of the unit in feet, all cells included. The value is rounded to the next whole number.

Models: AT 17-2G9 to 17-4K9

One-Cell Cooling Towers

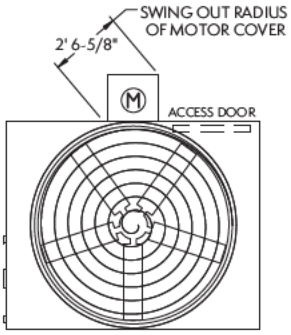

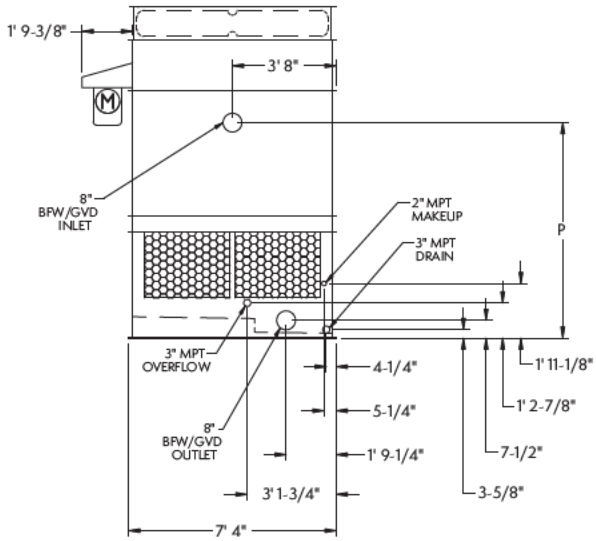

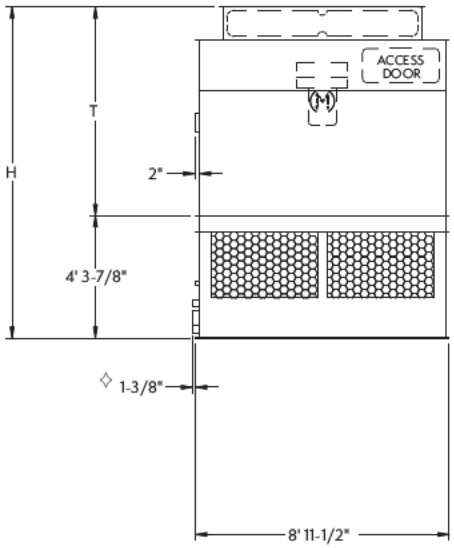

Model No.	Nominal Tonnage	WEIGHTS (LBS)			Fan Motor (HP)	Air Flow (CFM)	DIMENSIONS		
		Shipping	Operating	Heaviest Section✦			H†	T†	P
AT 17-2G9	113	3,920	6,430	2,560	5	32,100	11' 8-3/8 "	7' 4-1/2 "	7' 7-3/8 "
AT 17-2H9	135	3,960	6,470	2,600	7.5	36,500	11' 8-3/8 "	7' 4-1/2 "	7' 7-3/8 "
AT 17-2I9	149	3,990	6,500	2,630	10	40,100	11' 8-3/8 "	7' 4-1/2 "	7' 7-3/8 "
AT 17-2J9	171	4,060	6,570	2,700	15	45,600	11' 8-3/8 "	7' 4-1/2 "	7' 7-3/8 "
AT 17-3G9	129	4,180	6,690	2,820	5	31,600	12' 8-3/8 "	8' 4-1/2 "	8' 7-3/8 "
AT 17-3H9	152	4,220	6,730	2,860	7.5	36,000	12' 8-3/8 "	8' 4-1/2 "	8' 7-3/8 "
AT 17-3I9	168	4,250	6,760	2,890	10	39,400	12' 8-3/8 "	8' 4-1/2 "	8' 7-3/8 "
AT 17-3J9	193	4,320	6,830	2,960	15	44,700	12' 8-3/8 "	8' 4-1/2 "	8' 7-3/8 "
AT 17-3K9	213	4,370	6,880	3,010	20	48,900	12' 8-3/8 "	8' 4-1/2 "	8' 7-3/8 "
AT 17-4G9	143	4,440	6,950	3,080	5	31,100	13' 8-3/8 "	9' 4-1/2 "	9' 7-3/8 "
AT 17-4H9	164	4,480	6,990	3,120	7.5	35,300	13' 8-3/8 "	9' 4-1/2 "	9' 7-3/8 "
AT 17-4I9	179	4,510	7,020	3,150	10	38,700	13' 8-3/8 "	9' 4-1/2 "	9' 7-3/8 "
AT 17-4J9	202	4,580	7,090	3,220	15	44,000	13' 8-3/8 "	9' 4-1/2 "	9' 7-3/8 "
AT 17-4K9	220	4,630	7,140	3,270	20	48,100	13' 8-3/8 "	9' 4-1/2 "	9' 7-3/8 "
SLSF Addition		130	130	130			1' 6"	1' 6"	

NOTES:
1. An adequately sized bleed line must be installed in the cooling tower system to prevent buildup of impurities in the recirculated water.
2. Do not use catalog drawings for certified prints. Dimensions and weights are subject to change.
3. Adequate spacing must be allowed for access to the cooling tower. Refer to EVAPCO's Equipment Layout Manual.
4. Nominal Tonnage is based on 3 gpm per ton at 95° F entering water temperature, 85° F leaving water temperature, and 78° F wet-bulb temperature.

✧ Outlet connection extends beyond bottom flange.
✦ Heaviest section is upper section.
† Height includes fan guard which ships factory mounted.

Applications

Design
EVAPCO cooling towers are of heavy-duty construction and designed for long trouble-free operation. Proper equipment selection, installation, and maintenance are necessary to ensure full unit performance while maximizing the equipment's service life. Some of the major considerations in the application of a tower are presented below. For additional information, please contact the factory.

Piping
Cooling tower piping should be designed and installed in accordance with generally accepted engineering practices. All piping should be anchored by properly designed hangers and supports with allowance made for possible expansion and contraction. No external loads should be placed upon cooling tower connections, nor should any of the piping supports be anchored to the unit framework.

The piping connection locations shown on the drawings included in this catalog and on the website are standard locations that can be changed. If the piping connection locations shown do not meet the needs of a particular project, contact the factory to determine a viable solution.

Air Circulation
In reviewing the system design and unit location, it is important that enough fresh air is provided to enable proper unit performance. The best location is on an unobstructed roof top or at ground level away from walls and other barriers. Care must be taken when locating towers in wells or enclosures or next to high walls. The potential for recirculation of the hot, moist discharge air back into the unit intake exists. Recirculation raises the wet-bulb temperature of the entering air, causing the leaving water temperature to rise above the design conditions. For these cases, the overall unit height should be raised so it is even with the adjacent wall, reducing the chance of recirculation. This can be done by raising the entire unit or adding a discharge hood. For additional information, see the EVAPCO Equipment Layout Manual. Engineering assistance is also available from the factory to identify potential recirculation problems and recommend solutions, such as reorienting multi-cell units.

Design Flexibility and Assistance
The large number of EVAPCO AT cooling towers makes it easy to find a model to meet your design and layout needs. If there is an application for which the standard catalog product line does not work, EVAPCO will make a cooling tower that will fit your requirement. Consult your local EVAPCO representative or the factory for assistance with applications, layout, accessories or other design needs.

Water Treatment
Proper water treatment is an essential part of the maintenance required for all evaporative cooling equipment. A well-designed and consistently implemented water treatment program will help to ensure efficient system operation while maximizing the equipment's service life. A qualified water treatment company should design a site-specific water treatment protocol based on equipment (including all metallurgies in the cooling system), location, makeup water quality, and usage.

Without proper water treatment, the equipment can be susceptible to scale buildup on its heat exchange surfaces, biological growth in the recirculating water and corrosion of its components. Your site-specific water treatment protocol should include procedures for routine operation, startup after a shutdown period, and system layup, if applicable.

Passivation Period
If the equipment includes any galvanized components, the initial commissioning and passivation period is a critical time for maximizing the service life of galvanized equipment. EVAPCO recommends that a site-specific water treatment protocol, which includes a passivation procedure that details the desired water chemistry and visual inspections during the first six to twelve weeks of operation, be used. During this passivation period, recirculating water pH should be maintained above 7.0 and below 8.0 at all times.

Recirculating Water System
The cooling in a tower is accomplished by the evaporation of a portion of the recirculated spray water. As this water evaporates, it leaves behind mineral content and impurities. Therefore, it is important to bleed off an amount of water proportional to that which is evaporated to prevent the buildup of impurities. If this is not done, the mineral content and/or the corrosive nature of the water will continue to increase. This can ultimately result in heavy scaling or a corrosive condition.

Bleed or Blowdown
Evaporative cooling equipment requires a bleed or blowdown line to remove concentrated water from the system. The mineral concentration is monitored by measuring the conductivity of the water. EVAPCO recommends an automated conductivity controller to maximize the water efficiency of your system. Based on recommendations from your water treatment supplier, the conductivity controller should open and close a bleed valve to maintain the conductivity of the recirculating water.

Control of Biological Contaminants
Evaporative cooling equipment should be inspected regularly to ensure good microbiological control. Inspections should include both monitoring of microbial populations via culturing techniques and visual inspections for evidence of biofouling. Poor microbiological control can result in a loss of heat transfer efficiency, increased corrosion potential, and an increased risk of pathogens, such as those that can cause risk to health. If excessive microbiological contamination is detected, a more aggressive mechanical cleaning and/or water treatment program should be undertaken.

Sample Mechanical Specification

SECTION 23 65 00 COOLING TOWERS

Below specification applies for a base AT unit with no options or accessories selected. For a copy of a dynamic specification, please contact your local EVAPCO sales representative for access to EVAPCO's **SPECTRUM** selection software.

PART 1 GENERAL

1.1 RELATED DOCUMENTS

A. Drawings and general provisions of the Contract, including General and Supplementary Conditions and Division 01 Specification Sections, apply to this Section.

1.2 SUMMARY

A. This Section includes factory assembled and tested, open circuit mechanical induced draft vertical discharge cooling towers.

1.3 SUBMITTALS

A. Product Data: For each type of product indicated. Include rated capacities, pressure drop, performance curves with selected points indicated, furnished specialties, and accessories.

B. Shop Drawings: Complete set of manufacturer's prints of equipment assemblies, control panels, sections and elevations, and unit isolation. Include the following:

1. Assembled unit dimensions.
2. Weight and load distribution.
3. Required clearances for maintenance and operation.
4. Sizes and locations of piping and wiring connections.
5. Wiring Diagrams: For power, signal, and control wiring. Differentiate between manufacturer installed and field installed wiring.

C. Operation and Maintenance Data: Each unit to include operation and maintenance manual.

1.4 QUALITY ASSURANCE

A. Verification of Performance:

1. The thermal performance shall be certified by the Cooling Technology Institute in accordance with CTI Certification Standard STD-201. Lacking such certification, a field acceptance test shall be conducted within the warranty period in accordance with CTI Acceptance Test Code ATC-105, by a Certified CTI Thermal Testing Agency.
2. Unit Sound Performance ratings shall be tested according to CTI ATC-128 standard. Sound ratings shall not exceed specified ratings.

B. Unit shall meet or exceed energy efficiency per ASHRAE 90.1

1.5 WARRANTY

A. Submit a written warranty executed by the manufacturer, agreeing to repair or replace components of the unit that fail in materials and workmanship within the specified warranty period.

1. The Entire Unit shall have a comprehensive one (1) year warranty against defects in materials and workmanship from startup, not to exceed eighteen (18) month from shipment of the unit.
2. Fan Motor/Drive System: Warranty Period shall be Five (5) years from date of unit shipment from Factory (fan motor(s), fan(s), bearings, mechanical support, sheaves, bushings and belt(s)).

PART 2 PRODUCTS

2.1 MANUFACTURERS

A. Manufacturers: Subject to compliance with requirements, provide cooling towers manufactured by one of the following:

1. EVAPCO Model AT _____
2. Approved Substitute

2.2 THERMAL PERFORMANCE

A. Each unit shall be capable to cool _____ GPM of water entering at _____° F leaving at _____° F at a design wet bulb of _____° F.

2.3 IBC COMPLIANCE

A. The unit structure shall be designed, analyzed, and constructed in accordance with the latest edition of International Building Code (IBC) for: IP = 1.0, SDS = 1.34; z/h = 0, P = 119 psf.

2.4 COMPONENTS

A. Description: Factory assembled and tested, induced draft counter flow cooling tower complete with fan, fill, louvers, accessories and rigging supports

B. Materials of Construction

1. All cold water basin components including vertical supports, air inlet louver frames and panels up to rigging seam shall be constructed of heavy gauge mill hot-dip galvanized steel.
2. Upper Casing, channels and angle supports shall be constructed of heavy gauge mill hot-dip galvanized steel. Fan cowl and guard shall be constructed of galvanized steel. All galvanized steel shall be coated with a minimum of 2.35 ounces of zinc per square foot of area (G-235 Hot-Dip Galvanized Steel designation). During fabrication, all galvanized steel panel edges shall be coated with a 95% pure zinc-rich compound.

C. Fan(s):

1. Fan(s) shall be high efficiency axial propeller type with aluminum wide chord blade construction. Each fan shall be dynamically balanced and installed in a closely fitted cowl with venturi air inlet for maximum fan efficiency.

D. Drift Eliminators

1. Drift eliminators shall be constructed entirely of Polyvinyl Chloride (PVC) in easily handled sections. Design shall incorporate three changes in air direction and limit the water carryover to a maximum of 0.001% of the recirculating water rate.

Sample Mechanical Specification

E. Water Distribution System

1. Spray nozzles shall be precision molded ABS, large orifice nozzles utilizing fluidic technology for superior water distribution over the fill media. Nozzles shall be designed to minimize water distribution system maintenance. Spray header and branches shall be Schedule 40 Polyvinyl Chloride (PVC) for corrosion resistance with a steel connection to attach external piping.

F. Heat Transfer Media

1. Fill media shall be constructed of Polyvinyl Chloride (PVC) of cross-fluted design and suitable for inlet water temperatures up to 130° F. The bonded block fill shall be bottom supported and suitable as an internal working platform. Fill shall be self-extinguishing, have a flame spread of 5 under A.S.T.M. designation E-84-81a, and shall be resistant to rot, decay, and biological attack.

G. Air Inlet Louvers

1. The air inlet louver screens shall be constructed from UV inhibited polyvinyl chloride (PVC) and incorporate a framed interlocking design that allows for easy removal of louver screens for access to the entire basin area for maintenance. The louver screens shall have a minimum of two changes in air direction and shall be of a non-planar design to prevent splash-out and block direct sunlight and debris from entering the basin.

H. Makeup Float Valve Assembly

1. Makeup float assembly shall be a mechanical brass valve with an adjustable plastic float.

I. Pan Strainer

1. Pan Strainer(s) shall be all Type 304 Stainless Steel construction with large area removable perforated screens.

2.5 MOTORS AND DRIVES

A. General requirements for motors are specified in Division 23 Section "Motors"

B. Fan Motor

1. Fan motor(s) shall be totally enclosed, ball bearing type electric motor(s) suitable for moist air service. Motor(s) are Premium Efficient, Class F insulated, 1.15 service factor design. Inverter rated per NEMA MG1 Part 31.4.4.2 and suitable for variable torque applications and constant torque speed range with properly sized and adjusted variable frequency drives.

2. Fan motor(s) shall include strip-type space heaters with separate leads brought to the motor conduit box.

C. Fan Drive

1. The fan drive shall be multi-groove, solid back V-belt type with QD tapered bushings designed for 150% of the motor nameplate power. The belt material shall be neoprene reinforced with polyester cord and specifically designed for evaporative equipment service. Fan sheave shall be aluminum alloy construction. Belt adjustment shall be accomplished from the exterior of the unit.

D. Fan Shaft

1. Fan shaft shall be solid, ground and polished steel. Exposed surface shall be coated with rust preventative.

E. Fan Shaft Bearings

1. Fan Shaft Bearings shall be heavy-duty, self-aligning ball type bearings with extended lubrication lines to grease fittings located on access door frame. Bearings shall be designed for a minimum L_{10} life of 100,000 hours.

2.6 MAINTENANCE ACCESS

A. Fan Section

1. Access door shall be hinged and located in the fan section for fan drive and water distribution system access.

B. Basin Section

1. Framed removable louver panels shall be on all four (4) sides of the unit for pan and sump access.

C. Internal Working Platform

1. Internal working platform shall provide easy access to the fans, belts, motors, sheaves, bearings, all mechanical equipment and complete water distribution system. The fill shall be an acceptable means of accessing these components.

D. Louver Access Door

1. Hinged access door in louver shall be provided.

OUR PRODUCTS ARE MANUFACTURED WORLDWIDE.



EVAPCO, Inc. — World Headquarters & Research / Development Center

P.O. Box 1300 • Westminster, MD 21158 USA
410.756.2600 • marketing@evapco.com • **evapco.com**

North America

EVAPCO, Inc.
World Headquarters
Westminster, MD USA
410.756.2600
marketing@evapco.com

EVAPCO East
Taneytown, MD USA
410.756.2600
marketing@evapco.com

EVAPCO East
Key Building
Taneytown, MD USA
410.756.2600
marketing@evapco.com

EVAPCO Midwest
Greenup, IL USA
217.923.3431
evapcomw@evapcomw.com

EVAPCO West
Madera, CA USA
559.673.2207
contact@evapcowest.com

EVAPCO Iowa
Lake View, IA USA
712.657.3223

EVAPCO Iowa
Sales & Engineering
Medford, MN USA
507.446.8005
evapcomn@evapcomn.com

EVAPCO Newton
Newton, IL USA
618.783.3433
evapcomw@evapcomw.com

Evapcold Manufacturing
Greenup, IL USA
217.923.3431
evapcomw@evapcomw.com

EVAPCO Dry Cooling, Inc.
Bridgewater, NJ USA
908.379.2665
info@evapcodc.com

EVAPCO Dry Cooling, Inc.
Littleton, CO USA
908.379.2665
info@evapcodc.com
Spare Parts: 908.895.3236
Spare Parts: spares@evapcodc.com

EVAPCO Power México S. de R.L. de C.V.
Mexico City, Mexico
(52) 55.8421.9260
info@evapcodc.com

Refrigeration Vessels & Systems Corporation
A wholly owned subsidiary of EVAPCO, Inc.
Bryan, TX USA
979.778.0095
rvs@rvscorp.com

EvapTech, Inc.
A wholly owned subsidiary of EVAPCO, Inc.
Edwardsville, KS USA
913.322.5165
marketing@evaptech.com

Tower Components, Inc.
A wholly owned subsidiary of EVAPCO, Inc.
Ramseur, NC USA
336.824.2102
mail@towercomponentsinc.com

EVAPCO Alcoil, Inc.
A wholly owned subsidiary of EVAPCO, Inc.
York, PA USA
717.347.7500
info@evapco-alcoil.com

Europe

EVAPCO Europe
EMENA Headquarters
Tongeren, Belgium
(32) 12.39.50.29
evapco.europe@evapco.be

EVAPCO Europe BVBA
Tongeren, Belgium
(32) 12.39.50.29
evapco.europe@evapco.be

EVAPCO Europe, S.r.l.
Milan, Italy
(39) 02.939.9041
evapcoeurope@evapco.it

EVAPCO Europe, S.r.l.
Sondrio, Italy

EVAPCO Europe GmbH
Meerbusch, Germany
(49) 2159.69560
info@evapco.de

EVAPCO Europe A/S
Aabybro, Denmark
(45) 9824.4999
info@evapco.dk

Evap Egypt Engineering Industries Co.
A licensed manufacturer of EVAPCO, Inc.
Nasr City, Cairo, Egypt
(202) 24044997 / (202) 24044998
mmanz@tiba-group.com /
hany@tiba-group.com

EVAPCO Middle East DMCC
Dubai, United Arab Emirates
(971) 56.991.6584
info@evapco.ae

EVAPCO S.A. (Pty.) Ltd.
A licensed manufacturer of EVAPCO, Inc.
Isando, South Africa
(27) 11.392.6630
evapco@evapco.co.za

Asia Pacific

EVAPCO Asia Pacific Headquarters
Baoshan Industrial Zone
Shanghai, P.R. China
(86) 21.6687.7786
marketing@evapcochina.com

EVAPCO (Shanghai) Refrigeration Equipment Co., Ltd.
Baoshan Industrial Zone, Shanghai, P.R. China
(86) 21.6687.7786
marketing@evapcochina.com

EVAPCO (Beijing) Refrigeration Equipment Co., Ltd.
Huairou District, Beijing, P.R. China
(86) 10.6166.7238
marketing@evapcochina.com

EVAPCO Air Cooling Systems (Jiaxing) Company, Ltd.
Jiaxing, Zhejiang, China
(86) 573.8311.9379
info@evapcochina.com

EVAPCO Australia (Pty.) Ltd.
Riverstone, NSW, Australia
(61) 02.9627.3322
sales@evapco.com.au

EvapTech Asia Pacific Sdn. Bhd
A wholly owned subsidiary of EvapTech, Inc.
Puchong, Selangor, Malaysia
(60) 3.8070.7255
marketing-ap@evaptech.comtech.com

South America

EVAPCO Brasil
Equipamentos Industriais Ltda.
Indaiatuba, São Paulo, Brazil
(55) 11.5681.2000
vendas@evapco.com.br

FanTR Technology Resources
Itu, São Paulo, Brazil
(55) 11.4025.1670
fantr@fantr.com

Bulletin AT21ENG
3M/5-20/DGD

©2021 EVAPCO, Inc.

Committed to making life easier, more reliable and more sustainable for people everywhere

DCA125SSIU4F

Generator

WhisperWatt™

Prime Rating — 100kW (125kVA)

Standby Rating — 110kW (137.5kVA)

3-Phase, 60 Hertz, 0.8 PF

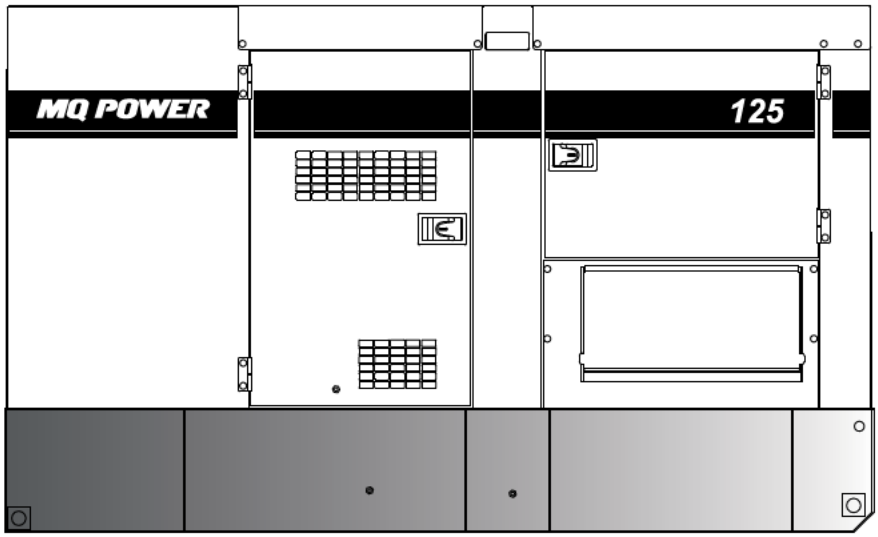

STANDARD FEATURES

- Heavy duty, 4-cycle, direct injection, heated crankcase vent, turbocharged, charge air cooled, 1000W block heater, diesel engine provides maximum reliability.
- EPA emissions certified - Tier 4 Final emissions compliant.
- Microprocessor engine control system maintains frequency to ±0.25%.
- Full load acceptance of standby nameplate rating in a single step.
- Fuel/water separator removes condensation from fuel for extended engine life. Panel mounted alarm light included.
- Sound attenuated, weather resistant, steel housing provides operation at 66 dB(A) at 23 feet. Fully lockable enclosure allows safe unattended operation.
- E-coat and powder coat paint provides durability and weather protection.
- Internal fuel tank with direct reading fuel gauge.
- Spill Containment - Bunded design protects environment by capturing up to 128% of engine fluids.
- Brushless alternator reduces service and maintenance requirements and meets temperature rise standards for Class F insulation systems.
  - Open delta alternator design provides virtually unlimited excitation for maximum motor starting capability.
  - Automatic voltage regulator (AVR) provides precise regulation.
- Fully covered power panel. Three-phase terminals and single phase receptacles allow fast and convenient hookup for most applications including temporary power boxes, tools and lighting equipment. All are NEMA standard.
- ECU845 microprocessor-based digital generator controller.
  - Remote 2-wire start/stop control.
  - High visibility LCD display with heated screen and alphanumeric readout.
  - Operational temperature range of -40° to 85° C.
  - AC monitoring along with fuel and DEF level indicators.
- Digital engine gauges including oil pressure, water temperature, battery volts, engine speed, engine load, fuel level and DEF level.
- Analog generator instrumentation including AC ammeter, AC voltmeter, frequency meter, ammeter phase selector switch, voltmeter phase selector switch, and voltage regulator adjustment potentiometer.
- Automatic safety shutdown system monitors the water temperature, engine oil pressure, low DEF, overspeed and overcrank. Warning lights indicate abnormal conditions.
- Voltage selector switch offers the operator a wide range of voltages that are manually selectable. Fine tuning of the output voltage can be accomplished by adjusting the voltage regulator control knob to obtain the desired voltage.
- Emergency Stop Switch — when manually activated, shuts down generator in the event of an emergency.

DCA125SSIU4F

Generator

SPECIFICATIONS

Generator Specifications		
Design	Revolving field, self-ventilated Drip-proof, single bearing	
Armature Connection	Star with Neutral	Zig Zag
Phase	3	Single
Standby Output	110KW (137.5 KVA)	79 KW
Prime Output	100 KW (125 KVA)	72 KW
3Ø Voltage (L-L/L-N) Voltage Selector Switch at 3Ø 240/139	208Y/120, 220Y/127, 240Y/139	N/A
3Ø Voltage (L-L/L-N) Voltage Selector Switch at 3Ø 480/277	416Y/240, 440Y/254, 480Y/277	N/A
1Ø Voltage (L-L/L-N) Voltage Selector Switch at 1Ø 240/120	N/A	240/120
Power Factor	0.8	1.0
Voltage Regulation (No load to full load)	±0.5%	
Generator RPM	1800	
Frequency	60 Hz	
Winding Pitch	2/3	
No. of Poles	4	
Excitation	Brushless with AVR	
Frequency Regulation: No Load to Full Load	Isochronous under varying loads from no load to 100% rated load	
Frequency Regulation: Steady State	±0.25% of mean value for constant loads from no load to full load.	
Insulation	Class F	
Sound Level dB(A) Full load at 23 feet	66	

Engine Specifications	
Make / Model	Isuzu / BR-4HK1X
Emissions	EPA Tier 4 Final Certified
Starting System	Electric
Design	4-cycle, water cooled, direct injection, turbocharged. Charged Air Cooled EGR, DOC and SCR.
Displacement	317 in³ (5193 cc)
No. cylinders	4
Bore x Stroke	4.52 x 4.92 in. (115 x 125 mm)
Gross Engine Power Output	170.8 hp (127.4 kW)
BMEP	211 psi (1458 kPa)
Piston Speed	1476 ft/min (7.5 m/s)
Compression Ratio	16.5:1
Engine Speed	1800 rpm
Overspeed Limit	2070 rpm
Oil Capacity	6.05 gallons (22.9 liters)
Battery	12V 150Ah x 1

Fuel System		
Recommended Fuel	ASTM-D975-No.1 & No.2-D*	
Maximum Fuel Flow (per hour)	19 gallons (71.9 liters)	
Maximum Inlet Restriction (Hg)	2.9 in (73.6 mm)	
Fuel Tank Capacity	169 gallons (640 liters)	
Fuel Consumption	**gph**	**lph**
At full load	7.1	26.9
At 3/4 load	5.6	21.2
At 1/2 load	4.1	15.5
At 1/4 load	2.6	10.0
DEF Tank Capacity	7.4 gallons (28 liters)	

* - Use ultra-low sulfur diesel fuel.

Cooling System	
Fan Load	6.57 hp (4.9 kW)
Coolant Capacity (with radiator)	10.3 gallons (39 liters)
Coolant Flow Rate (per minute)	60.8 gallons (230 liters)
Heat Rejection to Coolant (per minute)	4456 Btu (4.7 MJ)
Maximum Coolant Friction Head	1.1 psi (7.7 kPa)
Maximum Coolant Static Head	3.3 feet (1 meter)
Ambient Temperature Rating	104°F (40°C)

Air	
Combustion Air	244 cfm (6.9 m³/min)
Maximum Air Cleaner Restriction	25 in. H_2O (6.25 kPa)
Alternator Cooling Air	1352 cfm (38.3 m³/min)
Radiator Cooling Air	6005 cfm (170 m³/min)

Exhaust System	
Gas Flow (full load)	512 cfm (14.5 m³/min)
Gas Temperature	658°F (348°C)
Maximum Back Pressure	100 in. H_2O (25 kPa)

Amperage	
Rated Voltage	**Maximum Amps**
1Ø 120 Volt	300A x 2 (Zigzag)
1Ø 240 Volt	300 A (Zigzag)
3Ø 208 Volt	300 Amps
3Ø 240 Volt	300 Amps
3Ø 480 Volt	150 Amps
Main Line Circuit Breaker Rating	300 Amps
Over Current Relay Trip Set Point 480V Mode Only	152 Amps

WARRANTY*

Isuzu Engine**

12 months from date of purchase with unlimited hours or 36 months from date of purchase with 3000 hours (whichever occurs first).

Generator

24 months from date of purchase or 2000 hours (whichever occurs first).

Trailer

12 months excluding normal wear items.

*Refer to the express written, one-year limited warranty sheet for additional information.
**Refer to Isuzu Diesel Engine Limited Warranty for details.

NOTICE

Specifications sheet is subject to change and is not intended for use in installation design.

DCA125SSIU4F

Generator

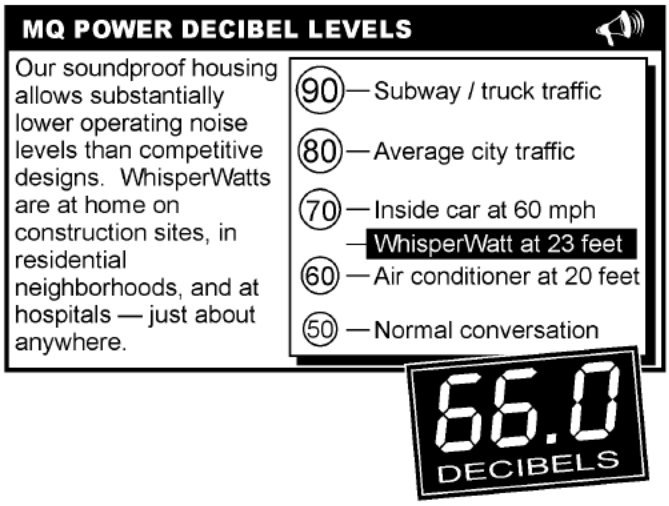

GENERATOR OUTPUT PANEL

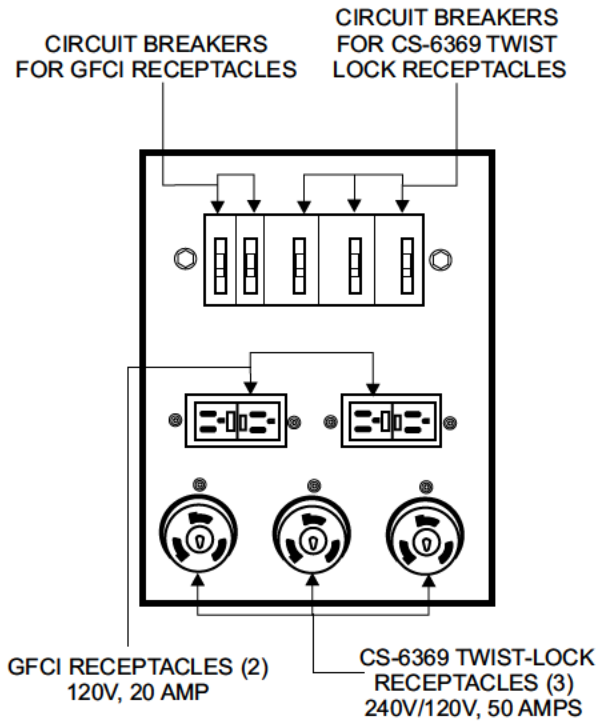

OPTIONAL GENERATOR FEATURES

- **Parallel Controls** — provides the ability to connect multiple generators together into a single power generation system.
- **PowerBalance™** — designed to assist generators when operating under low temperature and/or low load conditions to insure peak performance.
- **Battery Charger** — provides fully automatic and self-adjusting charging to the generator's battery system.
- **Trailer Mounted Package** — meets National Highway Traffic Safety Administration (NHTSA) regulations. Trailer is equipped with electronic or surge brakes with double axle configuration.

OPTIONAL CONTROL FEATURES

- **Audible Alarm** — alerts operator of abnormal conditions.

OPTIONAL FUEL CELL FEATURES

- **Sub-base Fuel Cells (double wall)** — additional fuel cell for extended runtime operation. Contains a leak sensor, low fuel level switch, and a secondary containment tank. UL142 listed.
- 12 hours of minimum run time.
- 24 hours of minimum run time.

OPTIONAL OUTPUT CONNECTIONS

- **Cam-Lok Connectors** — provides quick disconnect alternative to bolt-on connectors.
- **Pin and Sleeve Connectors** — provides industry standard connectors for all voltage requirements.
- **Output Cable** — available in any custom length and size configuration.

DCA125SSIU4F

Generator

SKID-MOUNT DIMENSIONS

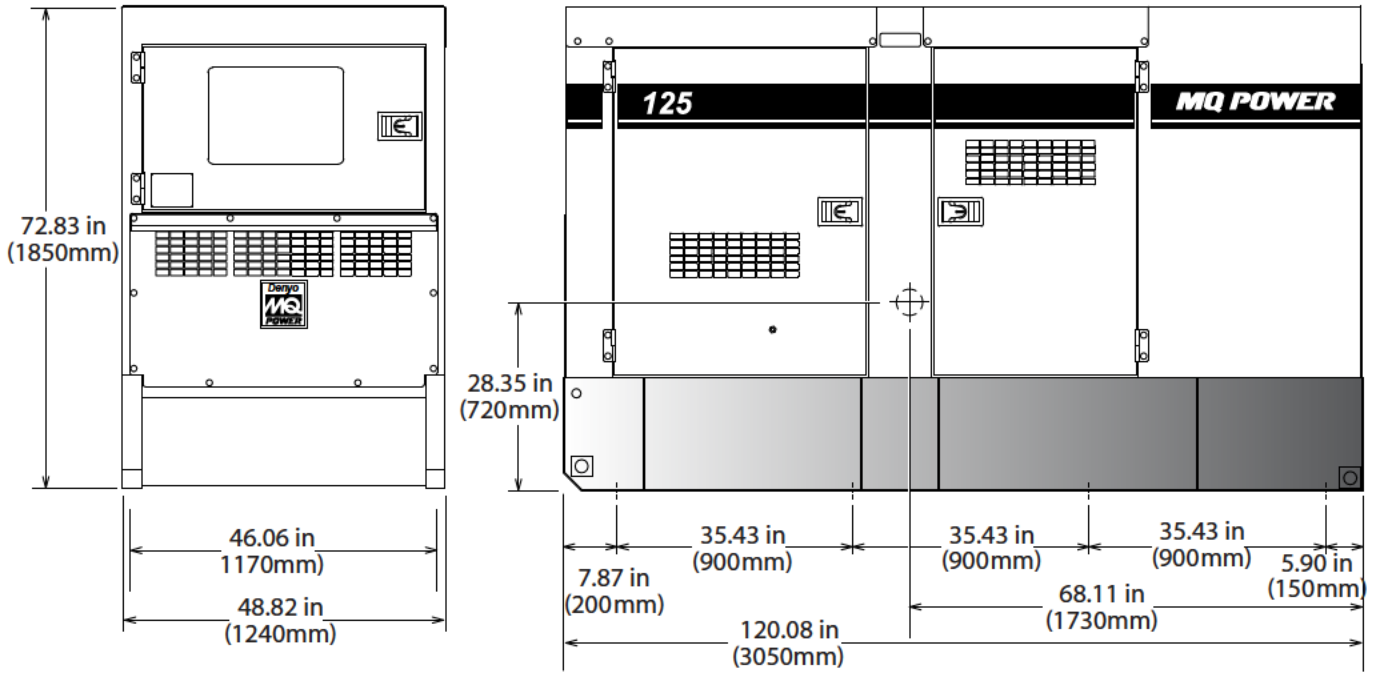

TRAILER-MOUNT DIMENSIONS

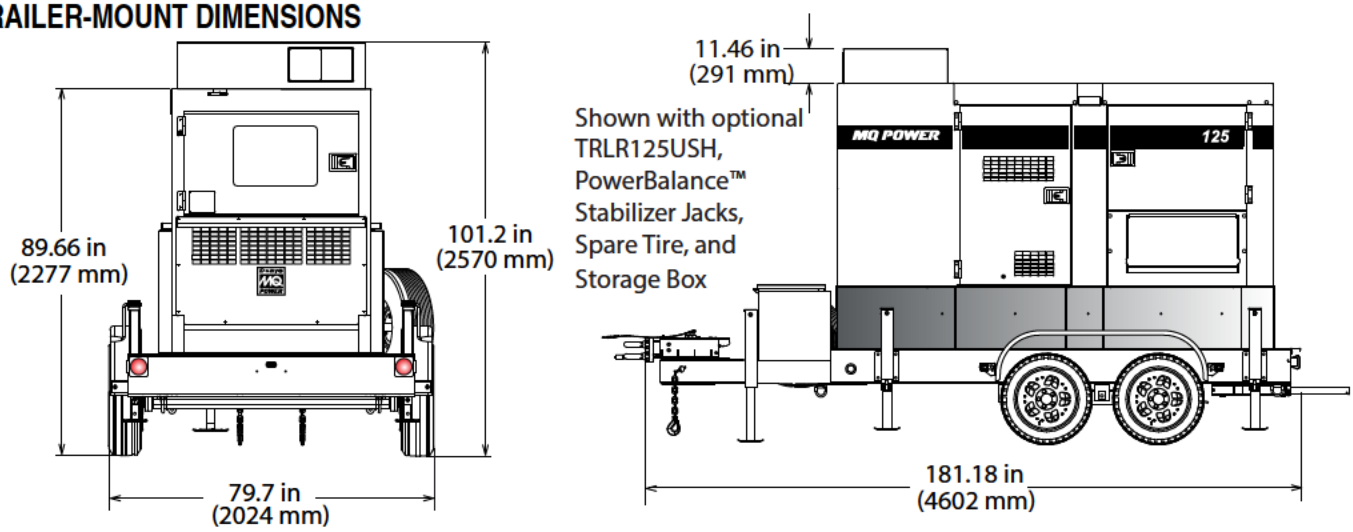

DCA125SSIU4F Weights*	
Dry Weight	5,291 lbs. (2,400 kg)
Wet Weight	6,702 lbs. (3,040 kg)
Max. Lifting Point Capacity	14,050 lb. (6,370 kg)

DCA125SSIU4F and TRLR125US Weights*	
Dry Weight (with TRLR125US)	7,013 lbs. (3,181 kg)
Wet Weight (with TRLR125US)	8,424 lbs. (3,821 kg)

* Weights do not include options.

Generator can be placed on MQ Trailer Models TRLR125US and TRLR180XF.

NOTICE

Features and Specifications are subject to change without notice.

© COPYRIGHT 2022 MULTIQUIP INC.
DCA125SSIU4F Rev. #8 (06/01/22)

MULTIQUIP
6141 Katella Avenue Suite 200
Cypress, CA 90630
310-537-3700
E-MAIL: mq@multiquip.com
WEBSITE: www.multiquip.com

McMillan McGee Corp.
digiTAM™ Temperature Acquisition Module



Networking
Multiple digiTAMs are accessed from a data server using Mc²'s communication protocols. Temperatures are immediately accessible via the Internet.

Easily Powered
DigiPAMs require only 7.5 mW of power per sensor during temperature conversions. External power supply over the 3 line digital bus means no batteries are required.

Digital at the Source
The temperatures are converted directly to digital signals to limit the effects of high electromagnetic interference due to thermal remediation systems. DigiTAMs and digiPAM pressure sensors are connected on the same digital bus for simple installation, automated process monitoring and real-time data access.

Instantaneous Temperature Profiling
The digiTAM strings make use of multiple temperature sensors on a common 3 line digital bus. Typically 30 temperature sensors are embedded in the Santoprene cable at 2.5 ft intervals. Thus a complete temperature profile is obtained for a narrow borehole within seconds.

digiTAM ™
Sensor String Specifications

Temperature	Principle	Integrated silicon temperature sensors
	Range	-55 to 125°C
	Accuracy	±0.7 °C
	Resolution	±0.125 °C
Environmental	Media compatibility	Air, water, steam, fuels, oils (Contact Mc² for specific contaminants)
	Wetted material	Gasoline Hose or Stainless Steel
Dimensions	Bottom Seal	1-1/16" (max)
	Cable	1/2 "
	Sensor interval (typ)	3.0 ft or 1.0 m
Weight	Cable	50g/ft.
Connection	Power	External supply, 3.0 to 5.5 V DC; no batteries needed Power consumption of 7.5 mW per sensor during measurement
	Communication	Data acquisition occurs using Mc²'s 3 line digital serial bus Individual temperature measurements occur within 750 ms Data immediately accessible via the internet
	Sensor string	Placed in a drop-tube at required depth and anchored to surface
	Data server	Data lines connected with CAT5 cable Connects to site server through Mc² communication hub

Extreme Environments
DigiTAMs are fully submersible and measure temperatures of up to 125°C. The sensor is compatible with most chemical contaminants seen at remediation sites.

Fast Installation
DigiTAMs are simply lowered into a monitoring well and anchored to the surface. The sensor is linked to the data server using standard CAT5 network cable and Mc²'s communication.

McMillan-McGee Corp.
4895 35B. St. SE. Calgary, Ab. Canada. T2B 3M9
www.mcmillan-mcgee.com

American Industrial Heat Transfer Inc.
Manufacturer of Quality Heat Exchangers

website : www.aihti.com
general email : sales@aihti.com
technical email : engineering@aihti.com

Shell & Tube Application Request: *(For liquid to liquid heat exchangers)*

For CS2400 - 4800 Series

Email form to: sales@aihti.com or engineering@aihti.com or fax to 434-757-1810

Contact Name _____ Telephone _____ Date _____

Company Name _____ Email _____

Address: _____ Fax _____

_____

Hot Side

Fluid Type _____

If available:
- Density _____ lb/ft3
- Viscosity _____ cP
- Conductivity _____ Btu/hr.ft.°F
- Specific Heat _____ Btu/lb.°F

1. Flow Rate _____
2. Temperature In _____
3. Desired Temperature Out _____
4. Heat Load _____

Cold Side

Fluid Type _____

If available:
- Density _____ lb/ft3
- Viscosity _____ cP
- Conductivity _____ Btu/hr.ft.°F
- Specific Heat _____ Btu/lb.°F

1. Flow Rate _____
2. Temperature In _____

Maximum Allowable Pressure Drop:

Hot Side _____ Cold Side _____

To properly size the heat exchanger we need 3 of the 4 parameter on the Hot Side and 2 on the Cold Side.

Fixed Tube Bundle ☐ Removable Tube Bundle ☐ U-Tube Fixed Tube Bundle ☐ U-Tube Removable Tube Bundle ☐

Shell Material Construction:

Steel ☐ Stainless Steel ☐

Tube Sheet Material

Steel ☐ Stainless Steel ☐

Brass ☐ (Applies to removable bundle only)

Tube Material Construction:

Copper ☐
90/10 Copper Nickel ☐
Stainless Steel ☐

End Bonnets Material:

Steel ☐
Stainless Steel ☐

Require All Stainless Steel Heat Exchanger Yes ☐ No ☐

ASME Code and Certified Yes ☐ No ☐

Comment: _____

_____

note: AIHTI reserves the right to make reasonable design changes without notice.
Copyright © 2019 - 2020 American Industrial Heat Transfer, Inc. 355 American Industrial Drive LaCrosse, VA 23950 tel: 434-757-1800 fax: 434-757-1810 email: sales@aihti com

CS 2400 - 4800 SERIES

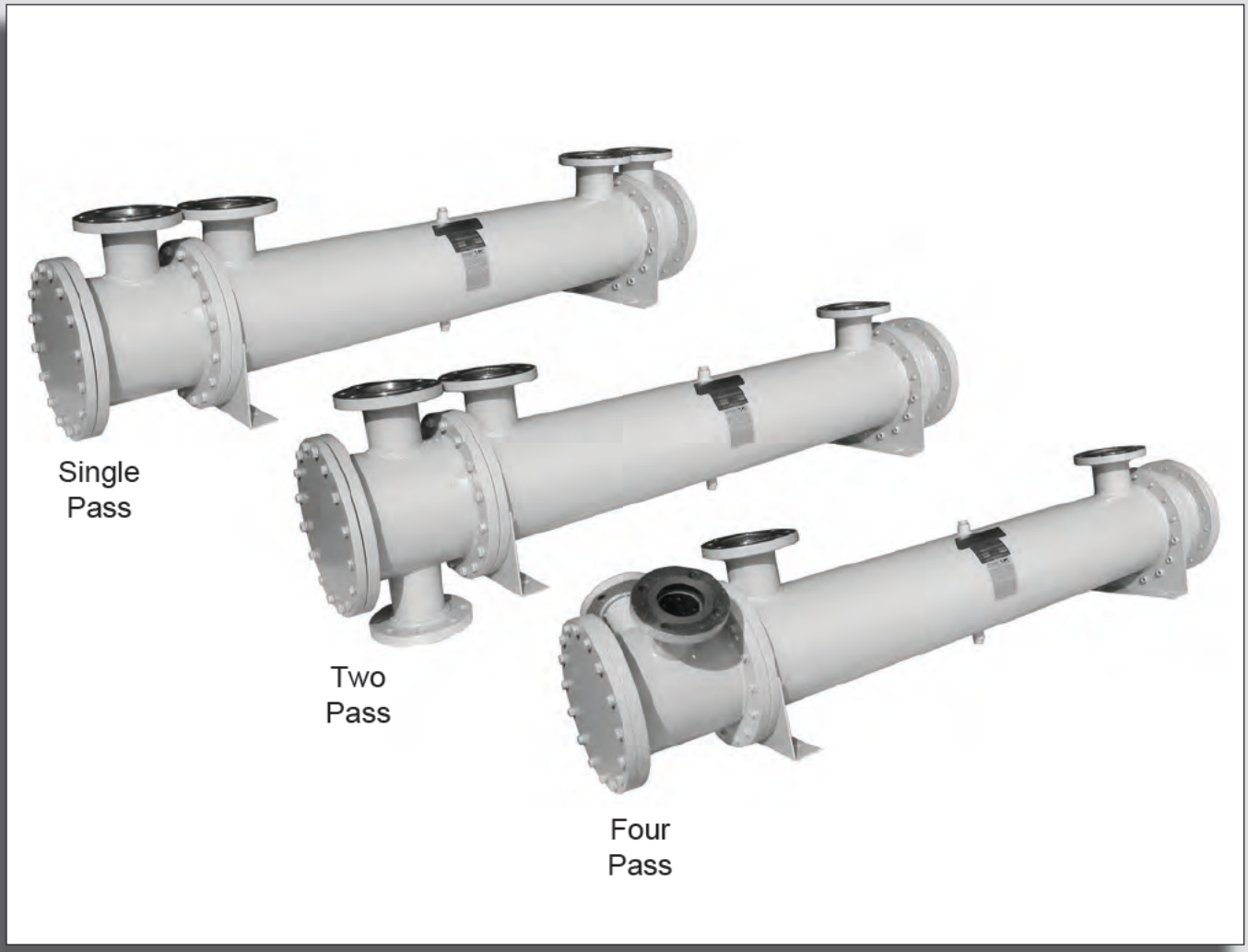

Fixed Tube Bundle / Liquid Cooled

HEAT EXCHANGERS

- High thermal capacity.
- Large flow capacity.
- Operating pressure for tubes 150 PSI.
- Operating pressure for shell 300 PSI.
- Operating temperature 300 °F.
- Computer generated data sheet available for any application
- As an option, available in ASME code and certified
- Can be customized to fit any applications.

note: AIHTI reserves the right to make reasonable design changes without notice.
Copyright © 2019 - 2020 American Industrial Heat Transfer, Inc. 355 American Industrial Drive LaCrosse, VA 23950 tel: 434-757-1800 fax: 434-757-1810 email: sales@aihti com

CS 2400 - CS 4800 Series *overview*

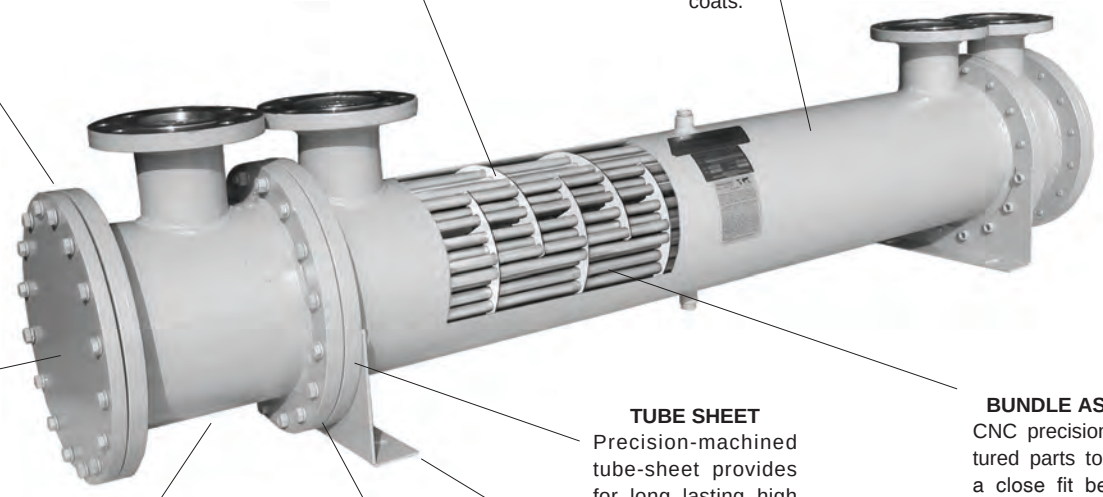

BAFFLES
CNC manufactured baffles to provide maximum turbulence and heat transfer with a minimum fluid pressure drop.

FINISH
Gray semigloss enamel suitable for outdoor service. Can be used as a base for additional coats.

FULL FACE GASKET
Full-face composite gasket.

REMOVABLE CHANNEL COVER
For easy access to tubes for cleaning without removing the channel.

TUBE SHEET
Precision-machined tube-sheet provides for long lasting high strength service.

BUNDLE ASSEMBLY
CNC precision manufactured parts to guarantee a close fit between the baffles, tubes, and shell. Clearances are minimized to provide for maximum heat transfer.

FABRICATED CHANNEL
Provides fluid into tubes with minimum restriction. One, two, or four pass interchangeability.

TUBE JOINT
Roller expanded tube joint to tube-sheet.

STEEL FOOT BRACKET

UNIT CODING

Example Model

Options

CS - 3648 - 4 - 6 - TP - CNT - SB - Z

Model
CS

Shell Diameter
2400 = 12.75"
2800 = 14.00"
3200 = 16.00"
3600 = 18.00"
4000 = 20.00"
4400 = 22.00"
4800 = 24.00"

Effective Tube Length
(12" increments)

Baffle Spacing Code
4.0"
6.0"
8.0"
12.0"
18.0"
24.0"

Cooling Tube Diamenter
6 = 3/8"
10 = 5/8"

Tube Side Passes
SP = 1 pass
TP = 2 pass
FP = 4 pass

Tubing
Blank = Copper

Options
CNT= 90/10 Cu Ni
STS = Stainless Steel
C = Carbon Steel

End Bonnets
Blank = Fabricated Steel

Options
SB = Stainless Steel

Zinc Anode
Z = 1 Zinc Anode
2Z = 2 Zinc Anode etc.

STANDARD CONSTRUCTION MATERIALS & RATINGS

Standard Model	CS 2400 - 4800	Options	
Shell	Steel	Stainless Steel	Operating Pressure Tubes 150 psig Operating Pressure Shell 300 psig Operating Temperature 300 °F
Tubes	Copper	90/10 Copper Nickel / Stainless Steel	
Baffle	Steel	Brass / Stainless Steel	
Tube Sheet	Steel	Stainless Steel	
End Bonnets	Fabricated Steel	Stainless Steel	
Mounting Brackets	Steel	Steel	
Gasket	Hypalon Composite	O-Ring	

note: AIHTI reserves the right to make reasonable design changes without notice.
Copyright © 2019 - 2020 American Industrial Heat Transfer, Inc.
355 American Industrial Drive LaCrosse, VA 23950 tel: 434-757-1800 fax: 434-757-1810 email: sales@aihti com

STEP 1: Calculate the heat load

The heat load in BTU/HR or (Q) can be derived by using several methods. To simplify things, we will consider general specifications for hydraulic system oils and other fluids that are commonly used with shell & tube heat exchangers.

Terms					
GPM	=	Gallons Per Minute	Kw	=	Kilowatt (watts x 1000)
CN	=	Constant Number for a given fluid	T_{in}	=	Hot fluid entering temperature in °F
△T	=	Temperature differential across the potential	T_{out}	=	Hot fluid exiting temperature in °F
PSI	=	Pounds per Square Inch (pressure) of the operating side of the system	t_{in}	=	Cold fluid temperature entering in °F
MHP	=	Horsepower of the electric motor driving the hydraulic pump	t_{out}	=	Cold fluid temperature exiting in °F
			Q	=	BTU / HR

For example purposes, a hydraulic system has a total input 1200 HP (894Kw) electric motor installed coupled to a pump that produces a flow of 600 GPM @ 3000 PSIG. The temperature differential of the oil entering the pump *vs* exiting the system is about 6.6°F. Even though the return line pressure operates below 200 psi, calculate the system heat load potential (Q) based upon the prime movers (pump) capability, cooling fluid is water @ 80ºF use one of the following equations to accomplish this:

To derive the required heat load (Q) to be removed by the heat exchanger, apply ONE of the following. Note: The calculated heat loads may differ slightly from one formula to the next. This is due to assumptions made when estimating heat removal requirements. The factor *(v)* represents the percentage of the overall input energy to be rejected by the heat exchanger. The *(v)* factor is generally about 30% for most hydraulic systems, however it can range from 20%-70% depending upon the installed system components and heat being generated (ie. servo valves, proportional valves, etc…will increase the percentage required).

Formula	Example
A) Q = GPM x CN x actual △T	A) Q =600 x 210 x 6.6°F = 831,600 BTU/HR
B) Q = [(PSI x GPM) / 1714] x (*v*) x 2545	B) Q =[(3000x600)/1714] x .30 x 2545 = 801,808 BTU/HR
C) Q = MHP x (*v*) x 2545	C) Q =1200 x .30 x 2545 = 916,200 BTU/HR
D) Q = Kw to be removed x 3415	D) Q =894 x .30 x 3415 = 915,909 BTU/HR
E) Q = HP to be removed x 2545	E) Q =300 x 2545 = 736,500 BTU/HR

Constant for a given fluid (CN)

1) Oil ..... CN = 210
2) Water..... CN = 500
3) 50% E. Glycol..... CN = 450

STEP 2: Calculate the Mean Temperature Difference

When calculating the MTD you will be required to choose a liquid flow rate to derive the Cold Side △T. If the water flow is unknown you may need to assume a number based on what is available. As a normal rule of thumb, for oil to water cooling a 2:1 oil to water ratio is used. For applications of water to water or 50 % Ethylene Glycol to water, a 1:1 ratio is common.

	Formula	Example (from step 1,item C)
HOT FLUID Oil	$\triangle T = \frac{Q}{CN \times GPM}$	$\triangle T = \frac{916{,}200\ BTU/hr}{210\ CN \times 600 GPM} = 7.37°F$ = △T Rejected
COLD FLUID Water	$\triangle t = \frac{BTU\ /\ hr}{CN \times GPM}$	$\triangle t = \frac{916{,}200\ BTU/hr}{500\ CN \times 300 GPM} = 3.81°F$ = △t Absorbed

T_{in} =	Hot Fluid entering temperature in degrees F	T_{in} = 117.3 °F
T_{out} =	Hot Fluid exiting temperature in degrees F	T_{out} = 110.0 °F
t_{in} =	Cold Fluid entering temperature in degrees F	t_{in} = 80.0 °F
t_{out} =	Cold Fluid exiting temperature in degrees F	t_{out} = 86.1 °F

$$\frac{T_{out} - t_{in}}{T_{in} - t_{out}} = \frac{S[\text{smaller temperature difference}]}{L\ [\text{larger temperature difference}]} = \left(\frac{S}{L}\right) \qquad \frac{110.0°F - 80.0°F}{117.3°F - 86.1°F} = \frac{30.0°F}{31.2°F} = .962$$

STEP 3: Calculate Log Mean Temperature Difference (LMTD)

To calculate the LMTD please use the following method;
L = Larger temperature difference from step 2.
M = S/L number (LOCATED IN TABLE A). .962 = .980
$LMTD_i$ = L x M
$LMTD_i$ = 31.2 x .980 (FROM TABLE A) = 30.6

To correct the $LMTD_i$ for a multipass heat exchangers calculate **R** & **K** as follows:

Formula	Example
$R = \frac{T_{in} - T_{out}}{t_{out} - t_{in}}$	$R = \frac{117.3°F - 100°F}{86.1°F - 90°F} = \frac{17.3°F}{6.1°F} =$ **{2.82=R}**
$K = \frac{t_{out} - t_{in}}{T_{in} - t_{in}}$	$K = \frac{86.1°F - 80°F}{117.3°F - 80°F} = \frac{6.1°F}{37.3°F} =$ **{.163=K}**

Locate the correction factor CF_B (FROM TABLE B)
$LMTD_c = LMTD_i \times CF_B$
$LMTD_c$ = 30.6 x .997 = **30.5**

STEP 4: Calculate the area required

$$\textbf{Required Area sq.ft.} = \frac{Q\ (BTU\ /\ HR)}{LMTD_c \times U\ (\text{FROM TABLE C})} \qquad \frac{916{,}200}{30.5 \times 100} = \textbf{300.4 sq ft.}$$

note: AIHTI reserves the right to make reasonable design changes without notice.
Copyright © 2019 - 2020 American Industrial Heat Transfer, Inc. 355 American Industrial Drive LaCrosse, VA 23950 tel: 434-757-1800 fax: 434-757-1810 email: sales@aihti com

CS 2400 - 4800 Series *selection*

STEP 5: Selection

a) From TABLE E choose the correct series size, baffle spacing, and number of passes that best fits your flow rates for both shell and tube side. Note that the tables suggest minimum and maximum information. Try to stay within the 20-80 percent range of the indicated numbers.

Example

Oil Flow Rate = 600 GPM = Series Required from Table E = **2400 Series**
Baffle Spacing from Table E = **18 baffle**
Water Flow Rate = 300 GPM = Passes required in 2000 series = **TP**

b) From TABLE D choose the heat exchanger model size based upon the sq ft. or surface area in the series size that will accommodate your flow rate.

Example

Required Area = 300.4 sq.ft Closest model required based upon sq.ft. & series = **CS-2472-12-6-TP**

If you require a computer generated data sheet for the application, or if the information that you are trying to apply does not match the corresponding information, please contact our engineering services department for further assistance.

Shell Dia. Code	Max. Liquid Flow - Shell Side						Liquid Flow - Tube Side					
	4	6	8	12	18	24	SP		TP		FP	
							Min.	Max.	Min.	Max.	Min.	Max.
2400	155	235	310	470	700	930	135	1080	70	535	34	265
2800	170	255	345	510	770	1030	166	1320	83	660	42	330
3200	200	295	395	590	890	1175	221	1760	110	880	55	440
3600	225	335	445	665	1000	1330	284	2275	142	1135	71	565
4000	250	375	495	745	1120	1490	355	2845	177	1420	89	710
4400	275	410	550	820	1230	1640	435	3480	218	1740	109	870
4800	300	450	600	895	1345	1790	522	4170	261	2085	130	1040

TABLE C

U	TUBE FLUID	SHELL FLUID
400	Water	Water
350	Water	50% E. Glycol
100	Water	Oil
300	50% E. Glycol	50% E. Glycol
90	50% E. Glycol	Oil

TABLE A- FACTOR M/LMTD = L x M

S/L	M	S/L	M	S/L	M	S/L	M
		.25	.541	.50	.721	.75	.870
.01	.215	.26	.549	.51	.728	.76	.864
.02	.251	.27	.558	.52	.734	.77	.879
.03	.277	.28	.566	.53	.740	.78	.886
.04	.298	.29	.574	.54	.746	.79	.890
.05	.317	.30	.582	.55	.753	.80	.896
.06	.334	.31	.589	.56	.759	.81	.902
.07	.350	.32	.597	.57	.765	.82	.907
.08	.364	.33	.604	.58	.771	.83	.913
.09	.378	.34	.612	.59	.777	.84	.918
.10	.391	.35	.619	.60	.783	.85	.923
.11	.403	.36	.626	.61	.789	.86	.928
.12	.415	.37	.634	.62	.795	.87	.934
.13	.427	.38	.641	.63	.801	.88	.939
.14	.438	.39	.648	.64	.806	.89	.944
.15	.448	.40	.655	.65	.813	.90	.949
.16	.458	.41	.662	.66	.818	.91	.955
.17	.469	.42	.669	.67	.823	.92	.959
.18	.478	.43	.675	.68	.829	.93	.964
.19	.488	.44	.682	.69	.836	.94	.970
.20	.497	.45	.689	.70	.840	.95	.975
.21	.506	.46	.695	.71	.848	.96	.979
.22	.515	.47	.702	.72	.852	.97	.986
.23	.524	.48	.709	.73	.858	.98	.991
.24	.533	.49	.715	.74	.864	.99	.995

TABLE B- LMTD correction factor for Multipass Exchangers

R

	.05	.1	.15	.2	.25	.3	.35	.4	.45	.5	.6	.7	.8	.9	1.0
2	1	1	1	1	1	1	1	.999	.993	.984	.972	.942	.908	.845	.71
.4	1	1	1	1	1	1	.994	.983	.971	.959	.922	.855	.70		
.6	1	1	1	1	1	.992	.980	.965	.948	.923	.840				
.8	1	1	1	1	.995	.981	.965	.945	.916	.872					
1.0	1	1	1	1	.988	.970	.949	.918	.867	.770					
2.0	1	1	.977	.973	.940	.845	.740								
3.0	1	1	.997	.933	.835										
4.0	1	.993	.950	.850											
5.0	1	.982	.917												
6.0	1	.968	.885												
8.0	1	.930													
10.0	.996	.880													
12.0	.985	.720													
14.0	.972														
16.0	.958														
18.0	.940														
20.0	.915														

K

TABLE D- Surface Area

Model Number	Surface Area in Sq.ft.		Model Number	Surface Area in Sq.ft.		Model Number	Surface Area in Sq.ft.		Model Number	Surface Area in Sq.ft.	
	3/8" O.D Tubing	5/8 O.D Tubing		3/8" O.D Tubing	5/8 O.D Tubing		3/8" O.D Tubing	5/8 O.D Tubing		3/8" O.D Tubing	5/8 O.D Tubing
CS-2436	153.2	82.5	CS-3248	334.6	185.9	CS-4048	540.4	301.1	CS-4848	793.2	442.4
CS-2448	204.2	110.0	CS-3260	418.2	232.3	CS-4060	675.4	376.3	CS-4860	991.6	553.0
CS-2460	255.3	137.4	CS-3272	501.9	278.8	CS-4072	810.5	451.6	CS-4872	1189.9	663.7
CS-2472	306.3	164.9	CS-3284	585.5	325.3	CS-4084	945.6	526.9	CS-4884	1388.2	774.3
CS-2484	357.4	192.4	CS-3296	669.1	371.8	CS-4096	1080.7	602.1	CS-4896	1586.5	884.9
CS-2496	408.4	219.9	CS-32108	752.8	418.2	CS-40108	1215.8	677.4	CS-48108	1784.8	995.5
CS-24108	459.5	247.4	CS-32120	836.4	464.7	CS-40120	1350.9	752.7	CS-48120	1983.1	1106.1
CS-24120	510.5	274.9	CS-32132	920.1	511.2	CS-40132	1486.0	827.9	CS-48132	2181.4	1216.7
CS-2848	251.3	138.8	CS-3648	432.0	240.9	CS-4448	661.3	361.3			
CS-2860	314.2	173.4	CS-3660	540.0	301.1	CS-4460	826.6	451.6			
CS-2872	377.0	208.1	CS-3672	647.9	361.3	CS-4472	991.9	541.9			
CS-2884	439.8	242.8	CS-3684	755.9	421.5	CS-4484	1157.3	632.2			
CS-2896	502.7	277.5	CS-3696	863.9	481.7	CS-4496	1322.6	722.6			
CS-28108	565.5	312.2	CS-36108	971.9	541.9	CS-44108	1487.9	812.9			
CS-28120	628.3	346.9	CS-36120	1079.9	602.1	CS-44120	1653.2	903.2			
CS-28132	691.1	381.6	CS-36132	1187.9	662.4	CS-44132	1818.5	993.5			

note: AIHTI reserves the right to make reasonable design changes without notice.
Copyright © 2019 - 2020 American Industrial Heat Transfer, Inc.
355 American Industrial Drive LaCrosse, VA 23950 tel: 434-757-1800 fax: 434-757-1810 email: sales@aihti com

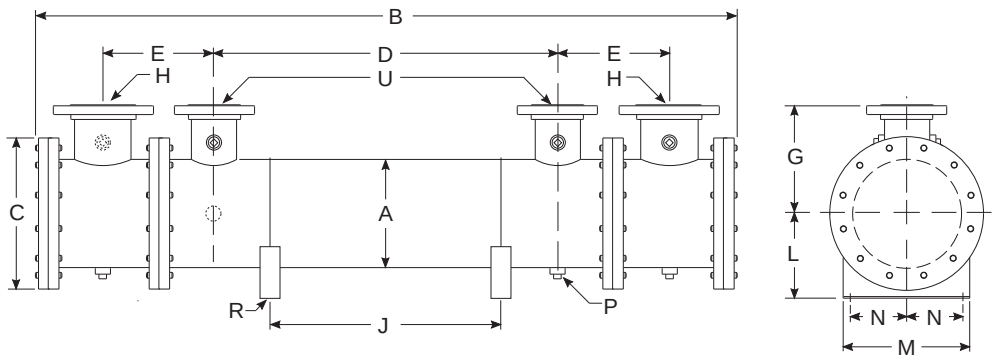

Model	B	E	H
CS-2436	68.00	14.44	8.00" ANSI Flange 150# RF
CS-2448	80.00		
CS-2460	92.00		
CS-2472	104.00		
CS-2484	116.00		
CS-2496	128.00		
CS-24108	140.00		
CS-24120	152.00		

Single Pass (SP)

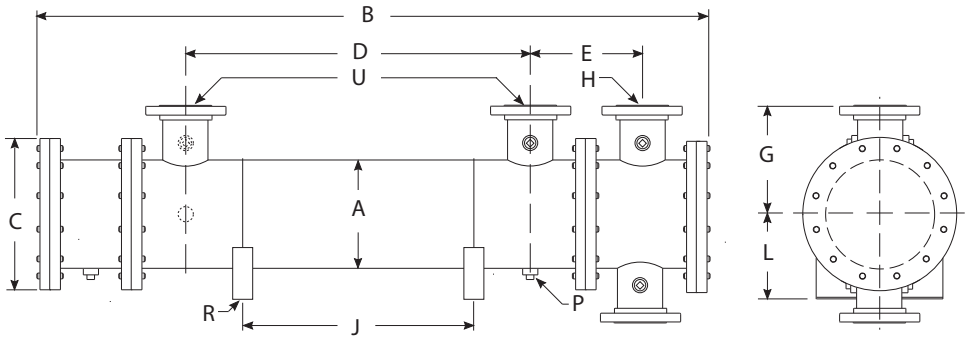

Model	B	E	H
CS-2436	63.00	14.44	6.00" ANSI Flange 150# RF
CS-2448	75.00		
CS-2460	87.00		
CS-2472	99.00		
CS-2484	111.00		
CS-2496	123.00		
CS-24108	135.00		
CS-24120	147.00		

Two Pass (TP)

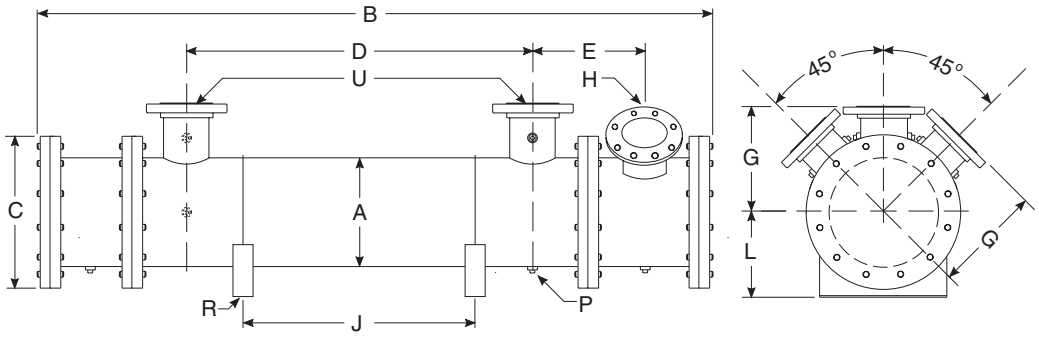

Model	B	E	H
CS-2436	63.00	14.44	4.00" ANSI Flange 150# RF
CS-2448	75.00		
CS-2460	87.00		
CS-2472	99.00		
CS-2484	111.00		
CS-2496	123.00		
CS-24108	135.00		
CS-24120	147.00		

Four Pass (FP)

COMMON DIMENSIONS & WEIGHTS

Model	A	C	D	G	J adjustable	L	M	N	P NPT	R	U	Weight	Model
CS-2436	12.75	16.25	24.00	11.38	12.00	12.00	14.75	5.00	(10) .50	.75"Ø x 1.00" Thru Slot	6.00" ANSI Flange 150# RF	1040	CS-2436
CS-2448			36.00		24.00							1130	CS-2448
CS-2460			48.00		36.00							1221	CS-2460
CS-2472			60.00		48.00							1312	CS-2472
CS-2484			72.00		60.00							1402	CS-2484
CS-2496			84.00		72.00							1493	CS-2496
CS-24108			96.00		84.00							1584	CS-24108
CS-24120			108.00		96.00							1675	CS-24120

note: AIHTI reserves the right to make reasonable design changes without notice.

Copyright © 2019 - 2020 American Industrial Heat Transfer, Inc. 355 American Industrial Drive LaCrosse, VA 23950 tel: 434-757-1800 fax: 434-757-1810 email: sales@aihti com

CS-2800 Series *dimensions*

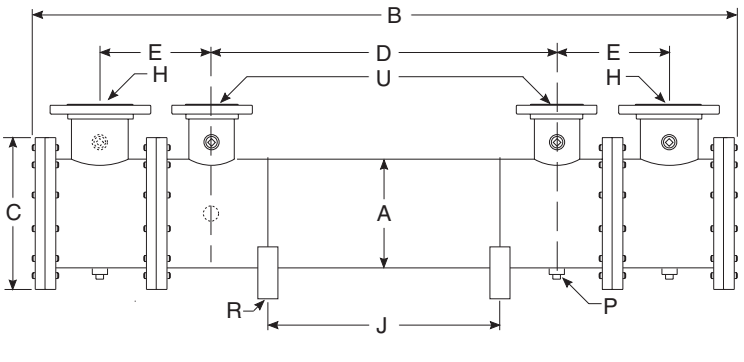

Model	B	E	H
CS-2836	68.00	15.44	8.00" ANSI Flange 150# RF
CS-2848	80.00		
CS-2860	92.00		
CS-2872	104.00		
CS-2884	116.00		
CS-2896	128.00		
CS-28108	140.00		
CS-28120	152.00		
CS-28132	164.00		

Single Pass (SP)

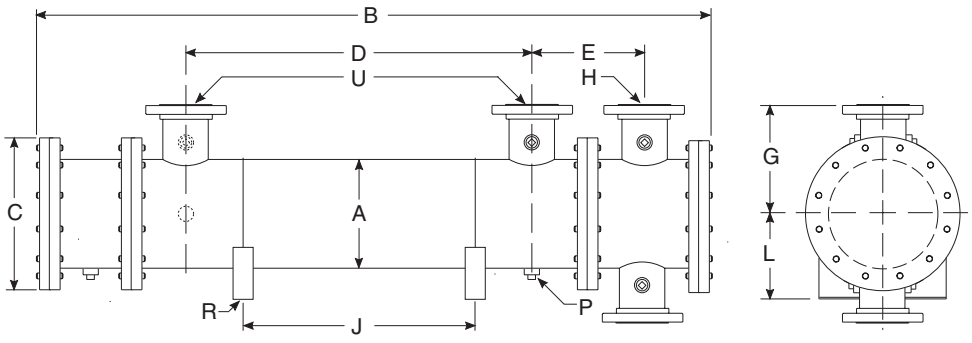

Model	B	E	H
CS-2836	64.00	15.44	6.00" ANSI Flange 150# RF
CS-2848	76.00		
CS-2860	88.00		
CS-2872	100.00		
CS-2884	112.00		
CS-2896	124.00		
CS-28108	136.00		
CS-28120	148.00		
CS-28132	160.00		

Two Pass (TP)

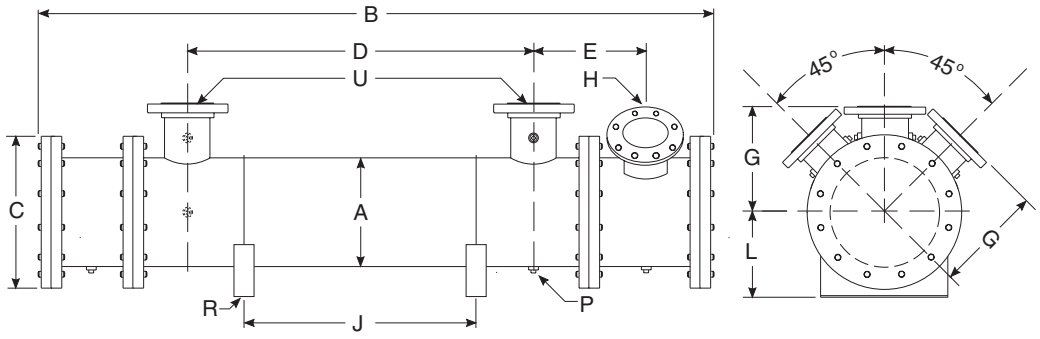

Model	B	E	H
CS-2836	64.00	15.44	4.00" ANSI Flange 150# RF
CS-2848	76.00		
CS-2860	88.00		
CS-2872	100.00		
CS-2884	112.00		
CS-2896	124.00		
CS-28108	136.00		
CS-28120	148.00		
CS-28132	160.00		

Four Pass (FP)

COMMON DIMENSIONS & WEIGHTS

Model	A	C	D	G	J adjustable	L	M	N	P NPT	R	U	Weight	Model
CS-2836	14 00	18.00	22.00	13.00	6.00	13.00	16.00	5 00	(10) .50	.75"Ø x 1.00" Thru Slot	8.00" ANSI Flange 150# RF	1288	CS-2836
CS-2848			34.00		18.00							1400	CS-2848
CS-2860			46.00		30.00							1512	CS-2860
CS-2872			58.00		42.00							1624	CS-2872
CS-2884			70.00		54.00							1736	CS-2884
CS-2896			82.00		66.00							1848	CS-2896
CS-28108			94.00		78.00							1960	CS-28108
CS-28120			106.00		90.00							2072	CS-28120
CS-28132			118.00		102.00							2184	CS-28132

note: AIHTI reserves the right to make reasonable design changes without notice.
Copyright © 2019 - 2020 American Industrial Heat Transfer, Inc.
355 American Industrial Drive LaCrosse, VA 23950 tel: 434-757-1800 fax: 434-757-1810 email: sales@aihti com

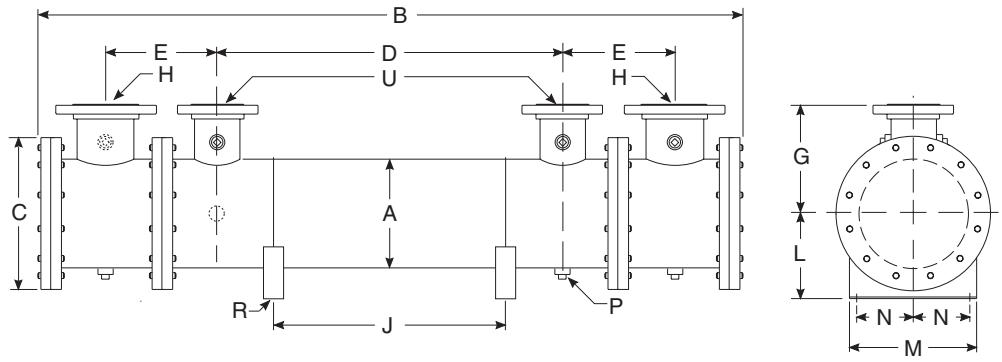

Model	B	E	H
CS-3248	85.00	17.00	10.00" ANSI Flange 150# RF
CS-3260	97.00		
CS-3272	109.00		
CS-3284	121.00		
CS-3296	133.00		
CS-32108	145.00		
CS-32120	157.00		
CS-32132	169.00		

Single Pass (SP)

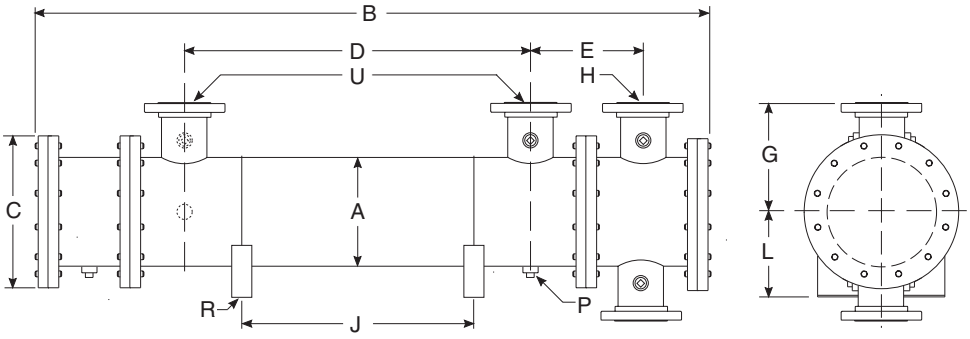

Model	B	E	H
CS-3248	80.00	17.00	6.00" ANSI Flange 150# RF
CS-3260	92.00		
CS-3272	104.00		
CS-3284	116.00		
CS-3296	128.00		
CS-32108	140.00		
CS-32120	152.00		
CS-32132	164.00		

Two Pass (TP)

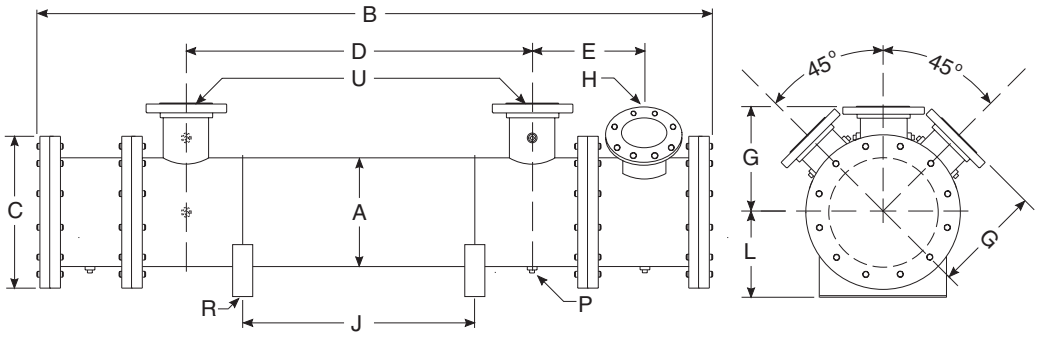

Model	B	E	H
CS-3248	80.00	17.00	5.00" ANSI Flange 150# RF
CS-3260	92.00		
CS-3272	104.00		
CS-3284	116.00		
CS-3296	128.00		
CS-32108	140.00		
CS-32120	152.00		
CS-32132	164.00		

Four Pass (FP)

COMMON DIMENSIONS & WEIGHTS

Model	A	C	D	G	J adjustable	L	M	N	P NPT	R	U	Weight	Model
CS-3248	16.00	20.00	34.00	13.00	18.00	14.00	18.00	6.00	(10) .50	.781"Ø x 1.50" Thru Slot	8.00" ANSI Flange 150# RF	2377	CS-3248
CS-3260			46.00		30.00							1975	CS-3260
CS-3272			58.00		42.00							2121	CS-3272
CS-3284			70.00		54.00							2266	CS-3284
CS-3296			82.00		66.00							2412	CS-3296
CS-32108			94.00		78.00							2558	CS-32108
CS-32120			106.00		90.00							2705	CS-32120
CS-32132			118.00		102.00							2852	CS-32132

note: AIHTI reserves the right to make reasonable design changes without notice.

Copyright © 2019 - 2020 American Industrial Heat Transfer, Inc. 355 American Industrial Drive LaCrosse, VA 23950 tel: 434-757-1800 fax: 434-757-1810 email: sales@aihti com

CS-3600 Series *dimensions*

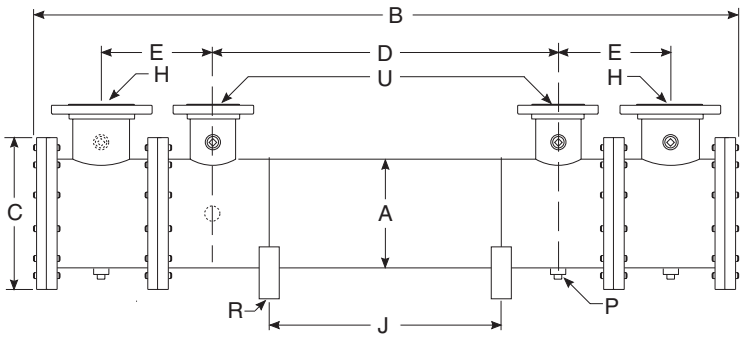

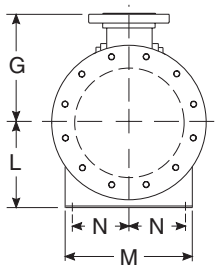

Model	B	E	H
CS-3648	85.00	18.00	10.00" ANSI Flange 150# RF
CS-3660	97.00		
CS-3672	109.00		
CS-3684	121.00		
CS-3696	133.00		
CS-36108	145.00		
CS-36120	157.00		
CS-36132	169.00		

Single Pass (SP)

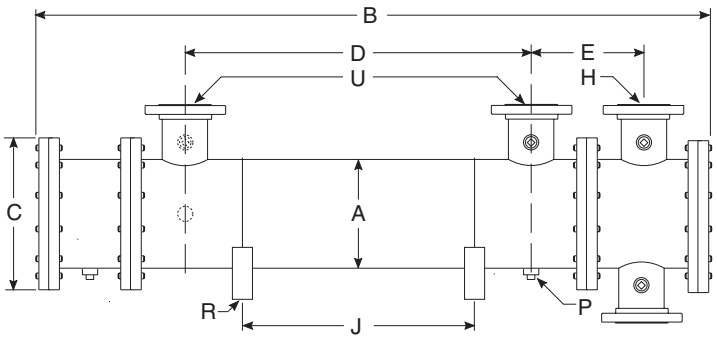

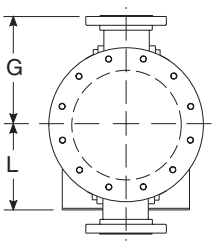

Model	B	E	H
CS-3648	81.50	18.00	8.00" ANSI Flange 150# RF
CS-3660	93.50		
CS-3672	105.50		
CS-3684	117.50		
CS-3696	129.50		
CS-36108	141.50		
CS-36120	153.50		
CS-36132	165.50		

Two Pass (TP)

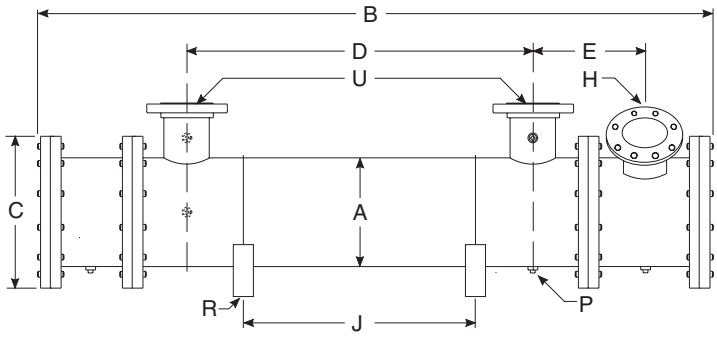

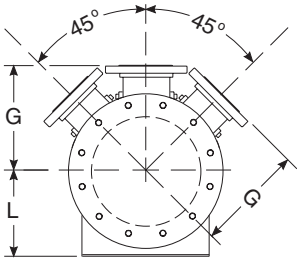

Model	B	E	H
CS-3648	81.50	18.00	5.00" ANSI Flange 150# RF
CS-3660	93.50		
CS-3672	105.50		
CS-3684	117.50		
CS-3696	129.50		
CS-36108	141.50		
CS-36120	153.50		
CS-36132	165.50		

Four Pass (FP)

COMMON DIMENSIONS & WEIGHTS

Model	A	C	D	G	J adjustable	L	M	N	P NPT	R	U	Weight	Model
CS-3648	18.00	22.00	32.00	13.00	12.00	15.00	20.00	7.00	.50	.781"Ø x 1.50" Thru Slot	10.00" ANSI Flange 150# RF	2314	CS-3648
CS-3660			44.00		24.00							2498	CS-3660
CS-3672			56.00		36.00							2684	CS-3672
CS-3684			68.00		48.00							2869	CS-3684
CS-3696			80.00		60.00							3054	CS-3696
CS-36108			92.00		72.00							3239	CS-36108
CS-36120			104.00		84.00							3424	CS-36120
CS-36132			116.00		96.00							3609	CS-36132

note: AIHTI reserves the right to make reasonable design changes without notice.
Copyright © 2019 - 2020 American Industrial Heat Transfer, Inc.
355 American Industrial Drive LaCrosse, VA 23950 tel: 434-757-1800 fax: 434-757-1810 email: sales@aihti com

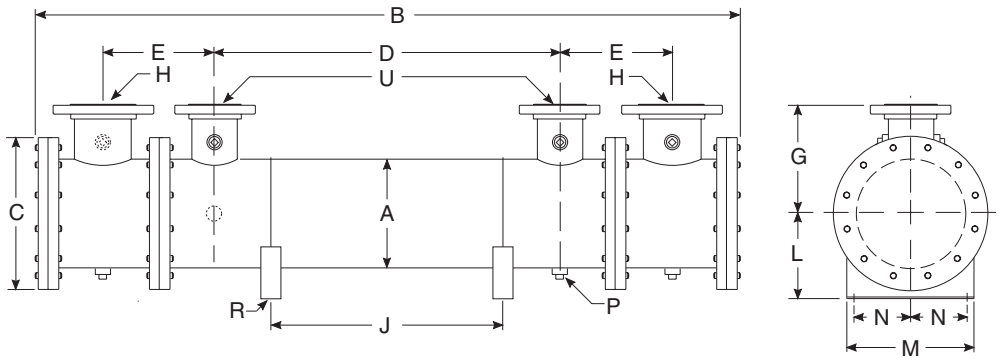

Model	B	E	H
CS-4048	91.00	19.50	12.00" ANSI Flange 150# RF
CS-4060	103.00		
CS-4072	115.00		
CS-4084	127.00		
CS-4096	139.00		
CS-40108	151.00		
CS-40120	163.00		
CS-40132	175.00		

Single Pass (SP)

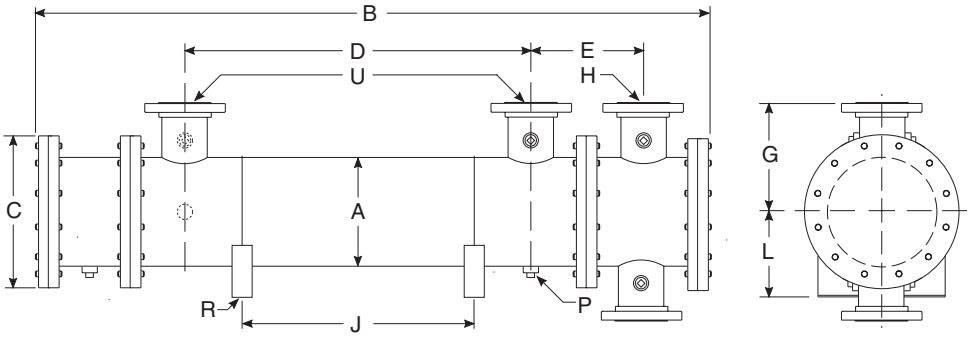

Model	B	E	H
CS-4048	86.50	19.50	8.00" ANSI Flange 150# RF
CS-4060	98.50		
CS-4072	110.50		
CS-4084	122.50		
CS-4096	134.50		
CS-40108	146.50		
CS-40120	158.50		
CS-40132	170.50		

Two Pass (TP)

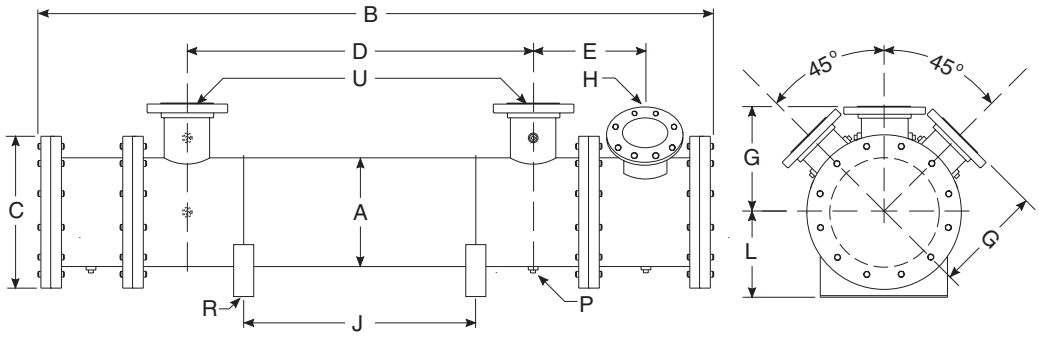

Model	B	E	H
CS-4048	86.50	19.50	6.00" ANSI Flange 150# RF
CS-4060	98.50		
CS-4072	110.50		
CS-4084	122.50		
CS-4096	134.50		
CS-40108	146.50		
CS-40120	158.50		
CS-40132	170.50		

Four Pass (FP)

COMMON DIMENSIONS & WEIGHTS

Model	A	C	D	G	J adjustable	L	M	N	P NPT	R	U	Weight	Model
CS-4048	20.00	25.00	32.00	16.00	12.00	17.00	22.00	8.00	.50	.781"Ø x 1.50" Thru Slot	10.00" ANSI Flange 150# RF	2856	CS-4048
CS-4060			44.00		24.00							3085	CS-4060
CS-4072			56.00		36.00							3313	CS-4072
CS-4084			68.00		48.00							3542	CS-4084
CS-4096			80.00		60.00							3770	CS-4096
CS-40108			92.00		72.00							3999	CS-40108
CS-40120			104.00		84.00							4227	CS-40120
CS-40132			116.00		96.00							4456	CS-40132

note: AIHTI reserves the right to make reasonable design changes without notice.

Copyright © 2019 - 2020 American Industrial Heat Transfer, Inc. 355 American Industrial Drive LaCrosse, VA 23950 tel: 434-757-1800 fax: 434-757-1810 email: sales@aihti com

CS-4400 Series *dimensions*

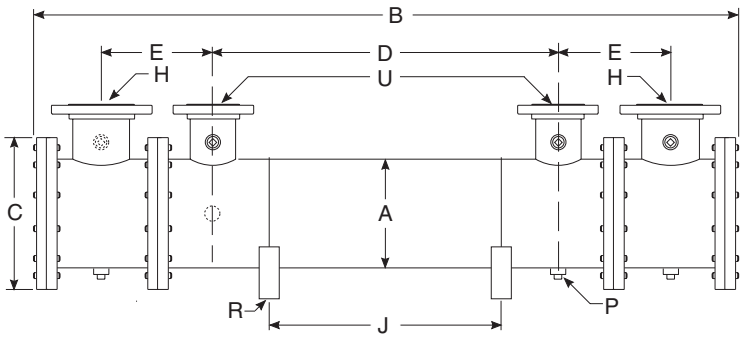

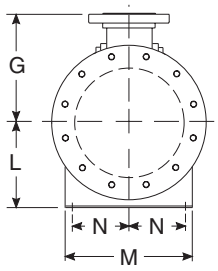

Model	B	E	H
CS-4448	95.00	21.63	14.00" ANSI Flange 150# RF
CS-4460	107.00		
CS-4472	119.00		
CS-4484	131.00		
CS-4496	143.00		
CS-44108	155.00		
CS-44120	167.00		
CS-44132	179.00		

Single Pass (SP)

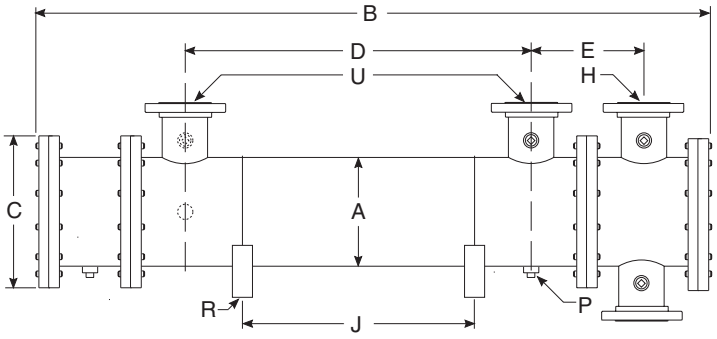

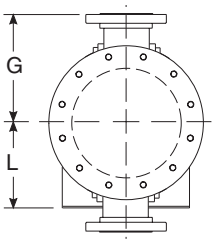

Model	B	E	H
CS-4448	90.00	21.63	10.00" ANSI Flange 150# RF
CS-4460	102.00		
CS-4472	114.00		
CS-4484	126.00		
CS-4496	138.00		
CS-44108	150.00		
CS-44120	162.00		
CS-44132	174.00		

Two Pass (TP)

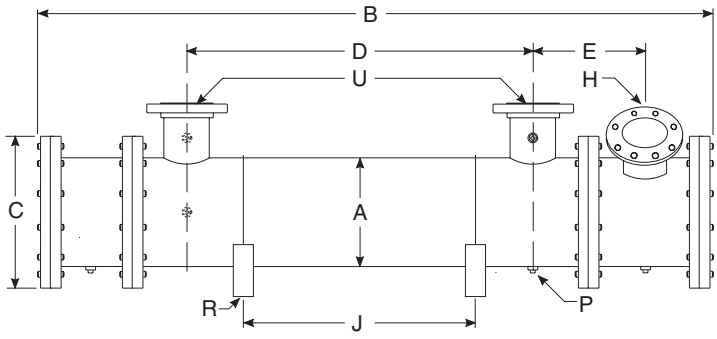

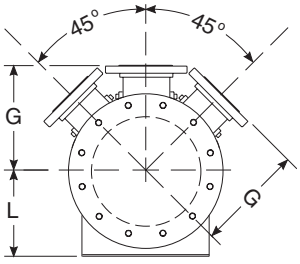

Model	B	E	H
CS-4448	90.00	21.63	6.00" ANSI Flange 150# RF
CS-4460	102.00		
CS-4472	114.00		
CS-4484	126.00		
CS-4496	138.00		
CS-44108	150.00		
CS-44120	162.00		
CS-44132	174.00		

FOUR PASS (FP)

COMMON DIMENSIONS & WEIGHTS

Model	A	C	D	G	J adjustable	L	M	N	P NPT	R	U	Weight	Model
CS-4448	22 00	28.00	29.00	17.00	5.00	18.00	24.00	8 50	.50	.781"Ø x 1.50" Thru Slot	12.00" ANSI Flange 150# RF	3456	CS-4448
CS-4460			41.00		17.00							3733	CS-4460
CS-4472			53.00		29.00							4099	CS-4472
CS-4484			65.00		41.00							4285	CS-4484
CS-4496			77.00		53.00							4562	CS-4496
CS-44108			89.00		65.00							4839	CS-44108
CS-44120			101.00		77.00							5115	CS-44120
CS-44132			113.00		89.00							5391	CS-44132

note: AIHTI reserves the right to make reasonable design changes without notice.
Copyright © 2019 - 2020 American Industrial Heat Transfer, Inc.
355 American Industrial Drive LaCrosse, VA 23950 tel: 434-757-1800 fax: 434-757-1810 email: sales@aihti com

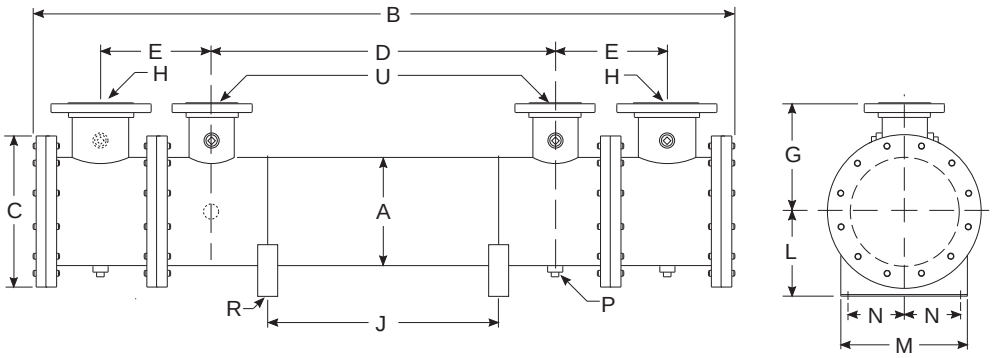

Model	B	E	H
CS-4848	95.00	21.63	14.00" ANSI Flange 150# RF
CS-4860	107.00		
CS-4872	119.00		
CS-4884	131.00		
CS-4896	143.00		
CS-48108	155.00		
CS-48120	167.00		
CS-48132	179.00		

Single Pass (SP)

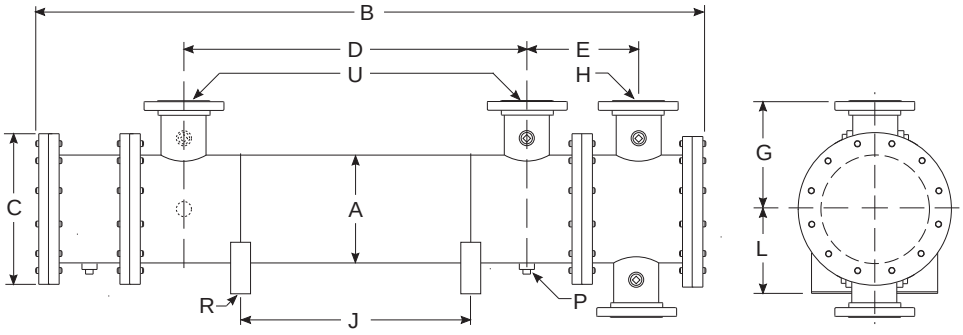

Model	B	E	H
CS-4848	91.50	21.63	10.00" ANSI Flange 150# RF
CS-4860	103.50		
CS-4872	115.50		
CS-4884	127.50		
CS-4896	139.50		
CS-48108	151.50		
CS-48120	163.50		
CS-48132	175.50		

Two Pass (TP)

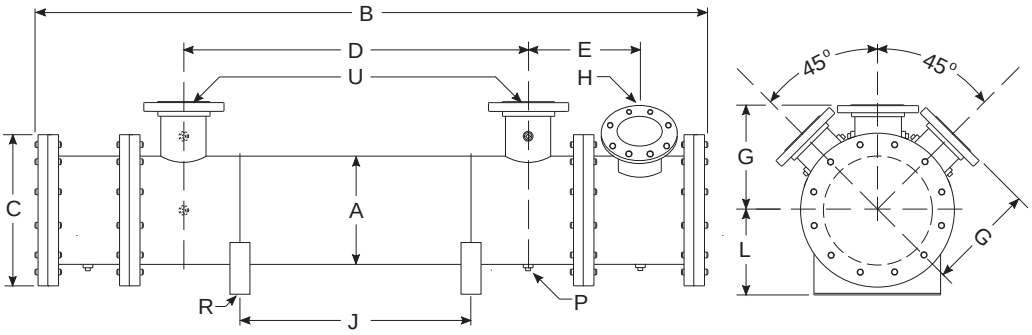

Model	B	E	H
CS-4848	91.50	21.63	8.00" ANSI Flange 150# RF
CS-4860	103.50		
CS-4872	115.50		
CS-4884	127.50		
CS-4896	139.50		
CS-48108	151.50		
CS-48120	163.50		
CS-48132	175.50		

FOUR PASS (FP)

COMMON DIMENSIONS & WEIGHTS

Model	A	C	D	G	J adjustable	L	M	N	P NPT	R	U	Weight	Model
CS-4848	24.00	30.00	29.00	18.00	5.00	19 00	26.00	10.00	.50	.781"Ø x 1.50" Thru Slot	12.00" ANSI Flange 150# RF	4113	CS-4848
CS-4860			41.00		17.00							4442	CS-4860
CS-4872			53.00		29.00							4771	CS-4872
CS-4884			65.00		41.00							5100	CS-4884
CS-4896			77.00		53.00							5429	CS-4896
CS-48108			89.00		65.00							5758	CS-48108
CS-48120			101.00		77.00							6087	CS-48120
CS-48132			113.00		89.00							6416	CS-48132

note: AIHTI reserves the right to make reasonable design changes without notice.

Copyright © 2019 - 2020 American Industrial Heat Transfer, Inc. 355 American Industrial Drive LaCrosse, VA 23950 tel: 434-757-1800 fax: 434-757-1810 email: sales@aihti com

PIPING HOOK-UP

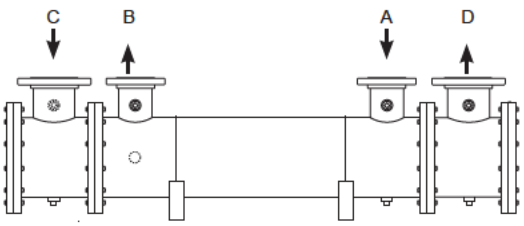

Single Pass

A ..... Hot fluid to be cooled
B ..... Cooled fluid
C ..... Cooling water in
D ..... Cooling water out

SP ..... Single Pass
TP ..... Two Pass
FP ..... Four Pass

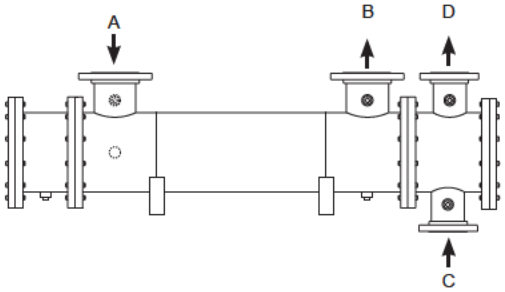

Two Pass

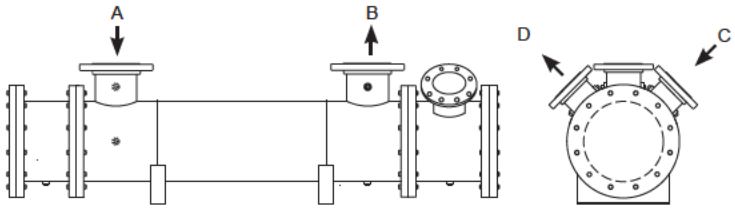

Two Pass

Receiving / Installation

a) Inspect unit for any shipping damage before uncrating. Indicate all damages to the trucking firms' delivery person, and mark it on the receiving bill before accepting the freight. Make sure that there is no visible damage to the outside surface of the heat exchanger. The published weight information located in this brochure is approximate. True shipment weights are determined at the time of shipping and may vary. Approximate weight information published herein is for engineering approximation purposes and should not be used for exact shipping weight. Since the warranty is based upon the unit date code located on the model identification tags, removal or manipulation of the identification tags will void the manufacturers warranty.

b) When handling the shell & tube heat exchanger, special care should be taken to avoid dropping the unit since mishandling could cause the heat exchanger to crack and leak externally. Mishandling of the unit is not covered under the manufacturers warranty. All units are shipped with partial wood/corrugated cardboard containers for safe handling.

c) Storage: American Industrial heat exchangers are protected against the elements during shipment. If the heat exchanger cannot be installed and put into operation immediately upon receipt, certain precautions are required to prevent deterioration during storage. The responsibility for integrity of the heat exchanger(s) is assumed by the user. American Industrial will not be respons ble for damage, corrosion, or other deterioration of the heat exchanger during transit or storage.
Proper storage practices are important when considering the high costs of repair or replacement, and the poss ble delays for items which require long lead times for manufacture. The following listed practices are provided solely as a convenience to the user, who shall make their own decision on whether to use all or any of them.

1) Heat exchangers not to be placed in immediate service, require precautionary measures to prevent corrosion or contamination.
2) Heat exchangers made of ferrous materials, may be pressure-tested using compressed air at the factory. Residual oil coating on the inside surfaces of the heat exchanger(s) as a result of flushing does not discount the possibility of internal corrosion. Upon receipt, fill the heat exchanger(s) with the appropriate grade of oil or apply a corrosion preventing inhibitor for storage.
3) Corrosion protection compounds for interior surfaces for long term storage or other applications are applied solely at the request of customers. Upon request, American Industrial can provide a customer approved corrosion preventative if available when included in the original purchase order specifications.
4) Remove all dirt, water, ice, or snow and wipe dry before moving heat exchanger(s) into storage. Heat exchangers are generally shipped empty, open drain plugs to remove any accumulated condensation moisture, then reseal. Accumulation of moisture usually indicates corrosion has already started and remedial action should be taken.
5) Store in a covered, environmentally stable area. The ideal storage environment for heat exchangers is in a dry, low-humidity atmosphere which is sealed to prevent the entry of blowing dust, rain, or snow. Maintain in atmospheric temperatures between 70ºF and 105ºF (Large temperature swings may cause condensation and moisture to form on steel components, threads, shell, etc...) Use thermometers and humidity indicators and maintain the atmosphere at 40% relative humidity, or lower.

d) Standard Enamel Coating: American Industrial provides its standard products with a normal base coat of oil base air cure enamel paint. The enamel paint is applied as a temporary protective and esthetic coating prior to shipment. While the standard enamel coating is durable, American Industrial does not warranty it as a long-term finish coating. It is strongly suggested that a more durable final coating be applied after installation or prior to long-term storage in a corrosive environment to cover any accidental scratches, enhance esthetics, and further prevent corrosion. It is the respons bility of the customer to provide regular maintenance against chips, scratches, etc... and regular touch up maintenance must be provided for long-term benefits and corrosion prevention.

e) Special Coatings: American Industrial offers as customer options, Air-Dry Epoxy, and Heresite (Air-Dry Phenolic) coatings at additional cost. American Industrial offers special coatings upon request, however American Industrial does not warranty coatings to be a permanent solution for any equipment against corrosion. It is the responsibility of the customer to provide regular maintenance against chips, scratches, etc... and regular touch up maintenance must be provided for long-term benefits and corrosion prevention.

f) American Industrial recommends that the equipment supplied should be installed by qualified personnel who have solid understanding of system design, pressure and temperature ratings, and piping assembly. Verify the service conditions of the system prior to applying any shell & tube heat exchanger. If the system pressure or temperature does not fall within the parameters on model rating tag located on the heat exchanger, contact our factory prior to installation or operation.

g) Plan the installation to meet the requirements indicated on the piping installation diagram as illustrated above. It is recommended to put the

note: AIHTI reserves the right to make reasonable design changes without notice.
Copyright © 2019 - 2020 American Industrial Heat Transfer, Inc. 355 American Industrial Drive LaCrosse, VA 23950 tel: 434-757-1800 fax: 434-757-1810 email: sales@aihti com

hot fluid to be cooled through the shell side and the cold fluid through the tube side. The indicated port assembly sequence in the diagram maximizes the performance, and minimizes the possibility of thermal shock. In instances where the fluids are required to be reversed, *hot fluid in the tubes and cold fluid in the shell* the heat exchanger will work with reduced performance. Installation may be vertical or horizontal or a combination thereof. However, the installation must allow for complete draining of the heat exchanger regardless of Single Pass, Two Pass, or four pass construction. Complete drainage is important to prevent the heat exchanger from freezing, over-heating of a fluid, or mineral deposit buildup.
For fixed bundle heat exchangers, provide sufficient clearance at one end to allow for the removal or replacement of tubes. On the opposite end, provide enough space to allow removal of the channel cover and complete channel to provide sufficient clearance to permit tube rolling and cleaning. Channel covers can be removed to aid in cleaning the tubes without disassembling channel, plumbing, or mounting hardware. Allow accessible room for scheduled cleaning as needed. Include thermometer wells and pressure gauge pipe ports in piping to and from the heat exchanger located as close to the heat exchanger as possible. For more information please contact American Industrial.

h) It is recommended to use flexible hose wherever possible to reduce vibration and allow slight movement. However, hoses are not required. Hydraulic carrying lines should be sized to handle the appropriate flow and to meet system pressure drop requirements based upon the systems parameters, and not based upon the units supply and return connection size. We recommend that a low cracking pressure direct acting relief valve be installed at the heat exchanger inlet to protect it from pressure spikes by bypassing oil in the event the system experiences a high flow surge. If preventative filtration is used it should be located ahead of the cooler on both shell and tube side to catch any scale or sludge from the system before it enters the cooler. Failure to install filters ahead of the heat exchanger could lead to possible heat exchanger failure due to high pressure if the system filters plug.

i) Standard shell & tube coolers are built with a rolled tube-sheet construction. However, the differential operating temperature between the entering shell side fluid and the entering tube side fluid should not exceed 150°F. If this condition exists, a severe thermal shock could occur leading to product failure and mixing of the fluids. For applications with a differential temperatures of 150°F or more, we recommend using a series with a floating tube-sheet, u-tube, or expansion joint to reduce the potential for the effects of thermal shock.

j) Water requirements vary from location to location. If the source of cooling water is from other than a municipal water supply, it is recommended that a water strainer be installed ahead of the heat exchanger to prevent dirt and debris from entering and clogging the flow passages. If a water modulating valve is used it is recommended to be installed at the inlet to the cooler to regulate the water flow.

k) For steam service, or other related applications, please consult our engineering department for additional information.

Maintenance
a) Inspect the heat exchanger for loosened bolts, connections, rust spots, corrosion, and for internal or external fluid leakage. Any corroded surfaces should be cleaned and recoated with paint.

b) Shell side: In many cases with clean hydraulic system oils it will not be necessary to flush the interior of the shell side of the cooler. In circumstances where the quality of hydraulic fluid is in question, the shell side should be disconnected and flushed on a yearly basis with a clean flushing oil/solvent to remove any sludge that has been deposited. For severe cases where the unit is plugged and cannot be flushed clean with solvent, the heat exchanger should be replaced to maintain the proper cooling performance.

c) Tube side: In many cases it will be necessary to clean the tube side of the heat exchanger due to poor fluid quality, debris, calcium deposits, corrosion, mud, sludge, seaweed, etc.... To clean the tube side, flush with clean water or any good quality commercial cleaner that does not attack the particular material of construction. With straight tube heat exchangers you can use a rod to carefully push any debris out of the tubes.

d) Zinc anodes are normally used to reduce the risk of failure due to electrolysis. Zinc anodes are a sacrificial component designed to wear and dissolve through normal use. Normally, zinc anodes are applied to the water supply side of the heat exchanger. Depending upon the amount of corrosive action, one, two, three, or more anodes can be applied to help further reduce the risk of failure. American Industrial Heat Transfer, Inc. offers zinc anodes as an option, to be specified and installed at the request our customers. It is the respons bility of the customer to periodically check and verify the condition of the zinc anode and replace it as needed.

Applications vary due to water chemical makeup and quality, material differences, temperature, flow rate, piping arrangements, and machine grounding. For those reasons, zinc anodes do not follow any scheduled factory predetermined maintenance plan moreover they must be checked routinely by the customer, and a maintenance plan developed based upon the actual wear rate.

If substantial wear occurs or zinc dissolves without replacement, premature failure or permanent damage may occur to the heat exchanger. American Industrial does not warranty customer applications. It is the responsibility of the customer to verify and apply the proper system materials of construction and overall system requirements. Failures resulting from properly applied or misapplied use of zinc anode(s) into non-specified or specified applications will be the sole responsibility of the customer.

e) A routine maintenance schedule should be developed and adjusted to meet your systems requirements based upon water quality, etc....Failure to regularly maintain and clean your heat exchanger can result in a reduction in operational performance and life expectancy.

Note: *Since applications can vary substantially, the installation and maintenance information contained in this catalog should be used as a basic guideline. The safe installation, maintenance, and use of any American Industrial Heat Transfer, Inc. heat exchanger are solely the responsibility of the user.*

THERMOSTATIC MODULATING WATER VALVE WITH BULB WELL ASSEMBLY
(for Shell & Tube Heat Exchangers And Air/Oil Coolers)

See Page 273

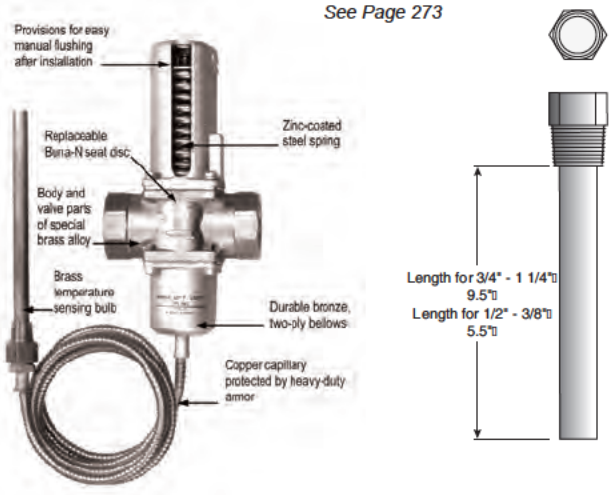

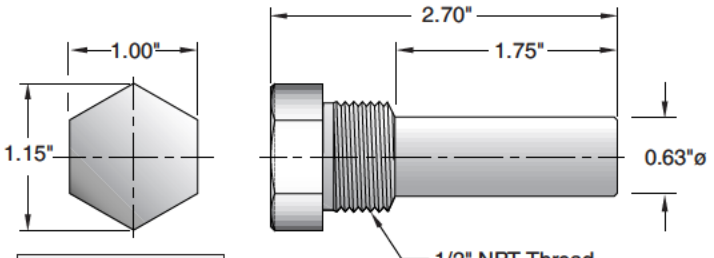

1/2" NPT Zinc Anode PN: 301-0003
CS-2400thru CS-4800

Copyright © 2019 - 2020 American Industrial Heat Transfer, Inc. 355 American Industrial Drive LaCrosse, VA 23950 tel: 434-757-1800 fax: 434-757-1810 email: sales@aihti com

American Industrial Heat Transfer Inc.
Manufacturer of Quality Heat Exchangers

website : www.aihti.com
general email : sales@aihti.com
technical email : engineering@aihti.com

Shell & Tube Application Request: *(For liquid to liquid heat exchangers)*

For SRCS Series

Email form to: sales@aihti.com or engineering@aihti.com or fax to 434-757-1810

Contact Name _____ Telephone _____ Date _____

Company Name _____ Email _____

Address: _____ Fax _____

_____

Hot Side

Fluid Type _____

If available:

Density _____ lb/ft3
Viscosity _____ cP
Conductivity _____ Btu/hr.ft.°F
Specific Heat _____ Btu/lb.°F

1. Flow Rate _____
2. Temperature In _____
3. Desired Temperature Out _____
4. Heat Load _____

Cold Side

Fluid Type _____

If available:

Density _____ lb/ft3
Viscosity _____ cP
Conductivity _____ Btu/hr.ft.°F
Specific Heat _____ Btu/lb.°F

1. Flow Rate _____
2. Temperature In _____

Maximum Allowable Pressure Drop:

Hot Side _____ Cold Side _____

To properly size the heat exchanger we need 3 of the 4 parameter on the Hot Side and 2 on the Cold Side.

Fixed Tube Bundle ☐ Removable Tube Bundle ☐ U-Tube Fixed Tube Bundle ☐ U-Tube Removable Tube Bundle ☐

Shell Material Construction:

Steel ☐ Stainless Steel ☐

Tube Sheet Material

Steel ☐ Stainless Steel ☐

Brass ☐ (Applies to removable bundle only)

Tube Material Construction:

Copper ☐
90/10 Copper Nickel ☐
Stainless Steel ☐

End Bonnets Material:

Steel ☐
Stainless Steel ☐

Require All Stainless Steel Heat Exchanger Yes ☐ No ☐

ASME Code and Certified Yes ☐ No ☐

Comment: _____

_____

note: AIHTI reserves the right to make reasonable design changes without notice.
Copyright © 2019 - 2020 American Industrial Heat Transfer, Inc. 355 American Industrial Drive LaCrosse, VA 23950 tel: 434-757-1800 fax: 434-757-1810 email: sales@aihti.com

SRCS SERIES

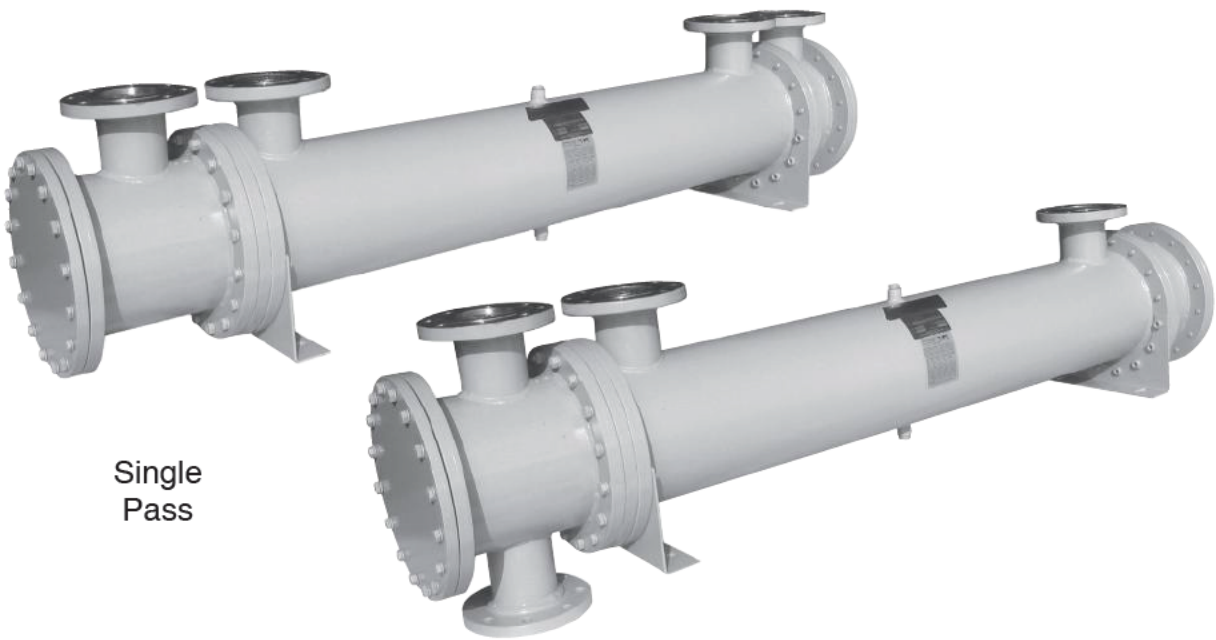

Single Pass

Two Pass

Straight Tube Removable Bundle / Liquid Cooled

HEAT EXCHANGERS

- Computer generated data sheet available for any application
- Removable straight-tube bundle
- Brass stationary and floating tube sheets.
- Brass packing and retaining rings.
- Dual Viton O-ring packing seals.
- Removable channel covers for access to tubes without disturbing existing plumbing.
- As an option, available in ASME code and certified
- Operating pressure, 150 PSI tubes, 250 PSI shell.
- Operating temperature 400°F
- Can be customized to fit any applications.

note: AIHTI reserves the right to make reasonable design changes without notice.
Copyright @ 2019 - 2020 American Industrial Heat Transfer, Inc. 355 American Industrial Drive LaCrosse, VA 23950 tel: 434-757-1800 fax: 434-757-1810 email: sales@aihti.com

SRCS Series *overview*

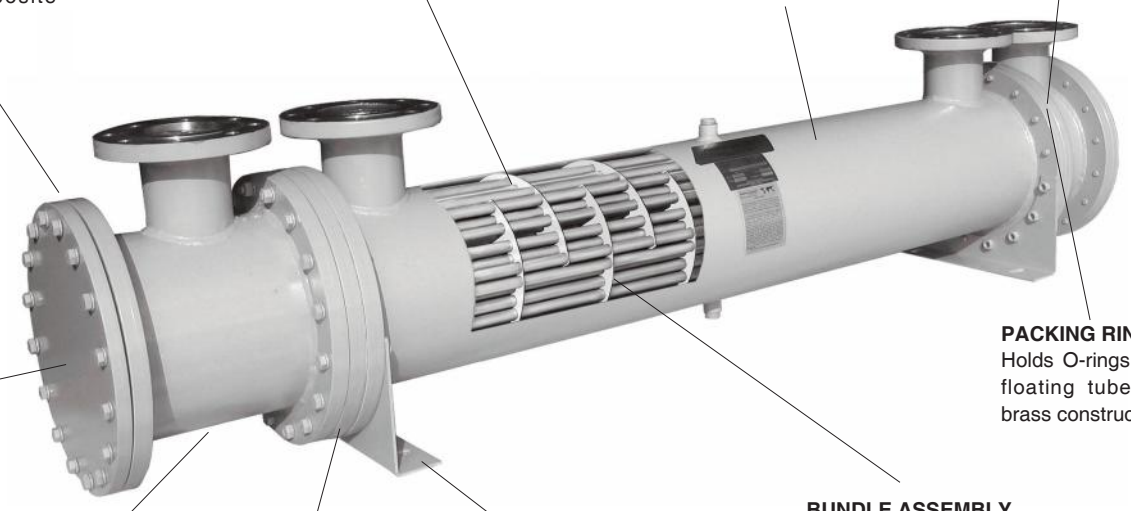

BAFFLES
CNC manufactured baffles to provide maximum turbulence and heat transfer with a minimum fluid pressure drop.

FINISH
Gray semigloss enamel. Can be used as a base for additional coats.

RETAINING RING
Holds packing O-rings in place, brass construction.

FULL FACE GASKET
Full-face composite gasket.

REMOVABLE CHANNEL COVER
For easy access to tubes for cleaning without removing the channel.

PACKING RING
Holds O-rings against floating tube sheet, brass construction.

BUNDLE ASSEMBLY
CNC precision manufactured parts to guarantee a close fit between the baffles, tubes, and shell. Clearances are minimized to provide for maximum heat transfer.

STEEL FOOT BRACKET

CHANNEL
Provides fluid into tubes with minimum restriction. One or Two Pass interchangeability.

STATIONARY TUBE SHEET
Roller expanded tube joint to tube-sheet made of brass construction.

UNIT CODING

Example Model

Options

SRCS - 2496 - 8 - 6 - TP - CNT - SB - Z

Model
SRCS

Shell Diameter
1700 = 8.00"
2000 = 10.75"
2400 = 12.75"
2800 = 14.00"
3200 = 16.00"
3600 = 18.00"
4000 = 20.00"

Effective Tube Length
(12" increments)

Baffle Spacing
4.0"
6.0"
8.0"
12.0"
18.0"
24.0"

Cooling Tube Diamenter
6 = 3/8"
10 = 5/8"

Tube Side Passes
SP = 1 pass
TP = 2 pass

Tubing
Blank = Standard

Options
CNT= 90/10 Cu Ni
STS = Stainless Steel
C = Carbon Steel

End Bonnets
Blank = Fabricated Steel

Options
SB = Stainless Steel

Zinc Anode
Z = 1 Zinc Anode
2Z = 2 Zinc Anode etc.

STANDARD CONSTRUCTION MATERIALS & RATINGS

Standard Model	SRCS 1700 - 4000	Options	Standard Unit Ratings
Shell	Steel	Stainless Steel	Operating Pressure Tubes 150 psig Operating Pressure Shell 300 psig Operating Temperature 400 °F Optional 500 °F
Tubes	Copper	90/10 Cu. Ni. / Stainless Steel	
Baffles	Steel	Brass / Stainless Steel	
Tube Sheets	Brass	Steel / Stainless Steel	
Retaining Ring	Brass	Steel / Stainless Steel	
Packing Ring	Brass	Steel / Stainless Steel	
Gaskets / Packing	Hypalon / Viton	Viton / EPDM / EPR	
Mounting Brackets	Steel	Stainless Steel	
Bonnets / Channels	Cast Iron / Steel	Stainless Steel	

note: AIHTI reserves the right to make reasonable design changes without notice.
Copyright © 2019 - 2020 American Industrial Heat Transfer, Inc.
355 American Industrial Drive LaCrosse, VA 23950 tel: 434-757-1800 fax: 434-757-1810 email: sales@aihti com

STEP 1: Calculate the heat load

The heat load in BTU/HR or (Q) can be derived by using several methods. To simplify things, we will consider general specifications for hydraulic system oils and other fluids that are commonly used with shell & tube heat exchangers.

Terms					
GPM	=	Gallons Per Minute	Kw	=	Kilowatt (watts x 1000)
CN	=	Constant Number for a given fluid	T_{in}	=	Hot fluid entering temperature in °F
△T	=	Temperature differential across the potential	T_{out}	=	Hot fluid exiting temperature in °F
PSI	=	Pounds per Square Inch (pressure) of the operating side of the system	t_{in}	=	Cold fluid temperature entering in °F
MHP	=	Horsepower of the electric motor driving the hydraulic pump	t_{out}	=	Cold fluid temperature exiting in °F
			Q	=	BTU / HR

For example purposes, a hydraulic system has a total input 1200 HP (894Kw) electric motor installed coupled to a pump that produces a flow of 600 GPM @ 3000 PSIG. The temperature differential of the oil entering the pump *vs* exiting the system is about 6.6°F. Even though return line pressure operates below 200 psi, calculate the system heat load potential (Q) based upon the prime movers (pump) capability, cooling fluid is water @ 80ºF use one of the following equations to accomplish this:

To derive the required heat load (Q) to be removed by the heat exchanger, apply ONE of the following. Note: The calculated heat loads may differ slightly from one formula to the next. This is due to assumptions made when estimating heat removal requirements. The factor *(v)* represents the percentage of the overall input energy to be rejected by the heat exchanger. The *(v)* factor is generally about 30% for most hydraulic systems, however it can range from 20%-70% depending upon the installed system components and heat being generated (ie. servo valves, proportional valves, etc…will increase the percentage required).

Formula	Example
A) Q = GPM x CN x actual △T	A) Q =600 x 210 x 6.6°F = 831,600 BTU/HR
B) Q = [(PSI x GPM) / 1714] x (*v*) x 2545	B) Q =[(3000x600)/1714] x .30 x 2545 = 801,808 BTU/HR
C) Q = MHP x (*v*) x 2545	C) Q =1200 x .30 x 2545 = 916,200 BTU/HR
D) Q = Kw to be removed x 3415	D) Q =894 x .30 x 3415 = 915,909 BTU/HR
E) Q = HP to be removed x 2545	E) Q =300 x 2545 = 736,500 BTU/HR

Constant for a given fluid (CN)

1) Oil ..... CN = 210
2) Water..... CN = 500
3) 50% E. Glycol..... CN = 450

STEP 2: Calculate the Mean Temperature Difference

When calculating the MTD you will be required to choose a liquid flow rate to derive the Cold Side △T. If the water flow is unknown you may need to assume a number based on what is available. As a normal rule of thumb, for oil to water cooling a 2:1 oil to water ratio is used. For applications of water to water or 50 % Ethylene Glycol to water, a 1:1 ratio is common.

	Formula	Example (from step 1,item C)
HOT FLUID Oil	$\triangle T = \frac{Q}{CN \times GPM}$	$\triangle T = \frac{916{,}200\ BTU/hr}{210\ CN \times 600 GPM} = 7.37°F$ = △T Rejected
COLD FLUID Water	$\triangle t = \frac{BTU\ /\ hr}{CN \times GPM}$	$\triangle t = \frac{916{,}200\ BTU/hr}{500\ CN \times 300 GPM} = 3.81°F$ = △t Absorbed

T_{in}	= Hot Fluid entering temperature in degrees F	= 117.3 °F
T_{out}	= Hot Fluid exiting temperature in degrees F	= 110.0 °F
t_{in}	= Cold Fluid entering temperature in degrees F	= 80.0 °F
t_{out}	= Cold Fluid exiting temperature in degrees F	= 86.1 °F

$$\frac{T_{out} - t_{in}}{T_{in} - t_{out}} = \frac{S[\text{smaller temperature difference}]}{L\ [\text{larger temperature difference}]} = \left(\frac{S}{L}\right)$$

$$\frac{110.0°F - 80.0°F}{117.3°F - 86.1°F} = \frac{30.0°F}{31.2°F} = .962$$

STEP 3: Calculate Log Mean Temperature Difference (LMTD)

To calculate the LMTD please use the following method;
L = Larger temperature difference from step 2.
M = S/L number (LOCATED IN TABLE A). .962 = .980
$LMTD_i$ = L x M

$LMTD_i$ = 31.2 x .980 (FROM TABLE A) = 30.6

To correct the $LMTD_i$ for a multipass heat exchangers calculate **R** & **K** as follows:

Formula	Example
$R = \frac{T_{in} - T_{out}}{t_{out} - t_{in}}$	$R = \frac{117.3°F - 100°F}{86.1°F - 90°F} = \frac{17.3°F}{6.1°F}$ = **{2.82=R}**
$K = \frac{t_{out} - t_{in}}{T_{in} - t_{in}}$	$K = \frac{86.1°F - 80°F}{117.3°F - 80°F} = \frac{6.1°F}{37.3°F}$ = **{.163=K}**

Locate the correction factor CF_B (FROM TABLE B)
$LMTD_c = LMTD_i \times CF_B$
$LMTD_c$ = 30.6 x .997 = **30.5**

STEP 4: Calculate the area required

$$\textbf{Required Area sq.ft.} = \frac{Q\ (BTU\ /\ HR)}{LMTD_c \times U\ (\text{FROM TABLE C})}$$

$$\frac{916{,}200}{30.5 \times 100} = \textbf{300.4 sq.ft.}$$

note: AIHTI reserves the right to make reasonable design changes without notice.
Copyright © 2019 - 2020 American Industrial Heat Transfer, Inc. 355 American Industrial Drive LaCrosse, VA 23950 tel: 434-757-1800 fax: 434-757-1810 email: sales@aihti com

SRCS Series *selection*

STEP 5: Selection

a) From TABLE E choose the correct series size, baffle spacing, and number of passes that best fits your flow rates for both shell and tube side. Note that the tables suggest minimum and maximum information. Try to stay within the 20-80 percent range of the indicated numbers.

Example

Oil Flow Rate = 600 GPM = Series Required from Table E = **2400 Series**
Baffle Spacing from Table E = **18 baffle**
Water Flow Rate = 300 GPM = Passes required in 2000 series = **TP**

b) From TABLE D choose the heat exchanger model size based upon the sq.ft. or surface area in the series size that will accommodate your flow rate.

Example

Required Area = 300.4 sq.ft Closest model required based upon sq.ft. & series = **SRCS-2484-18-6-TP**

If you require a computer generated data sheet for the application, or if the information that you are trying to apply does not match the corresponding information, please contact our engineering services department for further assistance.

TABLE E

Shell Dia. Code	Max. Liquid Flow - Shell Side						Liquid Flow - Tube Side			
	4	6	8	12	18	24	SP		TP	
							Min.	Max.	Min.	Max.
1700	140	165	190	210	220	—	52	418	26	164
2000	150	220	300	440	550	—	82	590	41	290
2400	155	235	310	470	700	930	125	980	64	486
2800	170	255	345	510	770	1030	150	1200	75	600
3200	200	295	395	590	890	1175	200	1600	100	800
3600	225	335	445	665	1000	1330	258	2068	129	1031
4000	250	375	495	745	1120	1490	322	2586	160	1290

TABLE C

U	TUBE FLUID	SHELL FLUID
400	Water	Water
350	Water	50% E. Glycol
100	Water	Oil
300	50% E. Glycol	50% E. Glycol
90	50% E. Glycol	Oil

TABLE A- FACTOR M/LMTD = L x M

S/L	M	S/L	M	S/L	M	S/L	M
		.25	.541	.50	.721	.75	.870
.01	.215	.26	.549	.51	.728	.76	.874
.02	.251	.27	.558	.52	.734	.77	.879
.03	.277	.28	.566	.53	.740	.78	.886
.04	.298	.29	.574	.54	.746	.79	.890
.05	.317	.30	.582	.55	.753	.80	.896
.06	.334	.31	.589	.56	.759	.81	.902
.07	.350	.32	.597	.57	.765	.82	.907
.08	.364	.33	.604	.58	.771	.83	.913
.09	.378	.34	.612	.59	.777	.84	.918
.10	.391	.35	.619	.60	.783	.85	.923
.11	.403	.36	.626	.61	.789	.86	.928
.12	.415	.37	.634	.62	.795	.87	.934
.13	.427	.38	.641	.63	.801	.88	.939
.14	.438	.39	.648	.64	.806	.89	.944
.15	.448	.40	.655	.65	.813	.90	.949
.16	.458	.41	.662	.66	.818	.91	.955
.17	.469	.42	.669	.67	.823	.92	.959
.18	.478	.43	.675	.68	.829	.93	.964
.19	.488	.44	.682	.69	.836	.94	.970
.20	.497	.45	.689	.70	.840	.95	.975
.21	.506	.46	.695	.71	.848	.96	.979
.22	.515	.47	.702	.72	.852	.97	.986
.23	.524	.48	.709	.73	.858	.98	.991
.24	.533	.49	.715	.74	.874	.99	.995

TABLE B- LMTD correction factor for Multipass Exchangers

R

	.05	.1	.15	.2	.25	.3	.35	.4	.45	.5	.6	.7	.8	.9	1.0
.2	1	1	1	1	1	1	1	.999	.993	.984	.972	.942	.908	.845	.71
.4	1	1	1	1	1	1	994	.983	.971	.959	.922	.855	.70		
.6	1	1	1	1	1	.992	980	.965	.948	.923	.840				
.8	1	1	1	1	.995	.981	.965	.945	.916	.872					
1.0	1	1	1	1	.988	.970	.949	.918	.867	.770					
2.0	1	1	.977	.973	.940	.845	.740								
3.0	1	1	.997	.933	.835										
4.0	1	.993	.950	.850											
5.0	1	.982	.917												
6.0	1	.968	.885												
8.0	1	.930													
10.0	.996	.880													
12.0	.985	.720													
14.0	.972														
16.0	.958														
18.0	.940														
20.0	.915														

K

TABLE D- Surface Area

Model Number	Surface Area in Sq. ft.		Model Number	Surface Area in Sq. ft.		Model Number	Surface Area in Sq. ft.		Model Number	Surface Area in Sq. ft.	
	3/8" O.D. Tubing	5/8" O.D. Tubing		3/8" O.D. Tubing	5/8" O.D. Tubing		3/8" O.D. Tubing	5/8" O.D. Tubing		3/8" O.D. Tubing	5/8" O.D. Tubing
SRCS-1736	55.3	33.3	SRCS-2472	286.3	149.2	SRCS-3248	336.9	179.3	SRCS-36144	1324.0	730.0
SRCS-1748	73.8	44.5	SRCS-2484	334.0	174.1	SRCS-3260	421.1	224.1	SRCS-36156	1434.0	791.0
SRCS-1760	92.2	55.6	SRCS-2496	381.7	199.0	SRCS-3272	505.4	268.9	SRCS-36168	1544.0	852.0
SRCS-1772	110.7	66.7	SRCS-24108	429.4	223.8	SRCS-3284	589.6	313.8	SRCS-36180	1655.0	913.0
SRCS-1784	129.1	77.8	SRCS-24120	477.1	248.7	SRCS-3296	673.8	358.6			
SRCS-1796	147.6	89.0	SRCS-24132	524.8	273.6	SRCS-32108	758.1	403.4	SRCS-4048	545.8	299 7
SRCS-17108	166.1	100.1	SRCS-24144	572.5	298.5	SRCS-32120	842.3	448.3	SRCS-4060	682.3	374 7
						SRCS-32132	926.5	493.1	SRCS-4072	818.7	449 6
SRCS-2036	104.8	53.9	SRCS-2836	186.1	96.2	SRCS-32144	1010.8	537.9	SRCS-4084	955.2	524 5
SRCS-2048	139.8	72.0	SRCS-2848	248.1	128.2	SRCS-32156	1095.0	582.8	SRCS-4096	1091.7	599 5
SRCS-2060	174.7	90.0	SRCS-2860	310.2	160.5	SRCS-32168	1179.2	627.6	SRCS-40108	1228.0	674.4
SRCS-2072	209.7	108.0	SRCS-2872	372.2	192.4				SRCS-40120	1364.6	749.4
SRCS-2084	244.6	126.0	SRCS-2884	434.3	224.4	SRCS-3648	441.4	243.5	SRCS-40132	1501.0	824.3
SRCS-2096	279.6	144.0	SRCS-2896	496.3	256.5	SRCS-3660	551.7	304.3	SRCS-40144	1637.5	899 2
SRCS-20108	314.5	162.0	SRCS-28108	558.4	290.4	SRCS-3672	662.1	356.2	SRCS-40156	1774.0	974 2
SRCS-20120	349.5	180.0	SRCS-28120	620.4	320.7	SRCS-3684	772.4	426.1	SRCS-40168	1910.4	1049.1
			SRCS-28132	682.5	352.7	SRCS-3696	882.8	486.9	SRCS-40180	2046.9	1124.1
SRCS-2436	143.1	74.6	SRCS-28144	744.5	384.8	SRCS-36108	993.1	547.8			
SRCS-2448	190.9	99.5	SRCS-28156	806.6	416.9	SRCS-36120	1103.5	608.7			
SRCS-2460	238.6	124.4	SRCS-28168	868.6	448.9	SRCS-36132	1213.8	669.6			

note: AIHTI reserves the right to make reasonable design changes without notice.
Copyright @ 2019 - 2020 American Industrial Heat Transfer, Inc.
355 American Industrial Drive LaCrosse, VA 23950 tel: 434-757-1800 fax: 434-757-1810 email: sales@aihti com

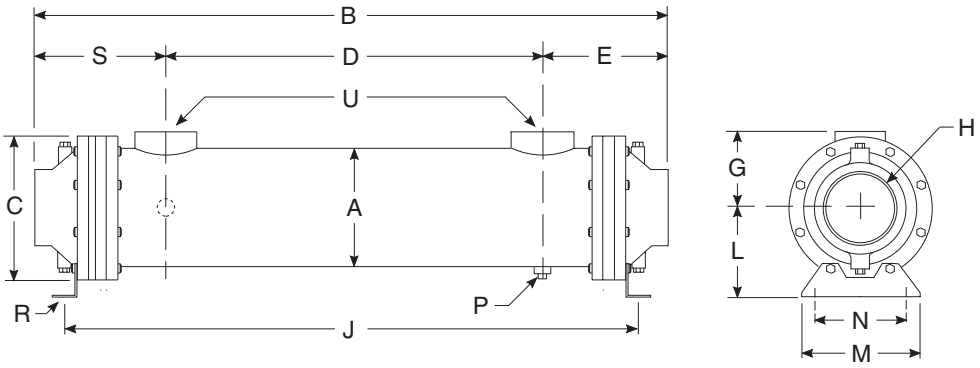

Model	B	S	E	H NPT
SRCS-1736	45.4	8.35	8.04	4.0
SRCS-1748	57.4			
SRCS-1760	69.4			
SRCS-1772	81.4			
SRCS-1784	93.4			
SRCS-1796	105.4			
SRCS-17108	117.4			
SRCS-17120	129.4			

Single Pass (SP)

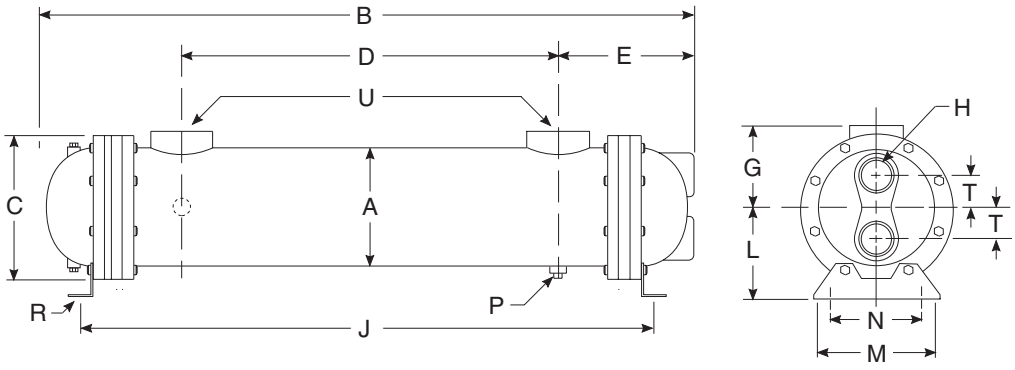

Model	B	E	H NPT	T
SRCS-1736	44.5	7.88	2.5	1.88
SRCS-1748	56.5			
SRCS-1760	68.5			
SRCS-1772	80.5			
SRCS-1784	92.5			
SRCS-1796	104.5			
SRCS-17108	116.5			
SRCS-17120	128.5			

Two Pass (TP)

COMMON DIMENSIONS & WEIGHTS

Model	A	C	D	G	J	L	M	N	P NPT	R	U NPT	Weight	Model
SRCS-1736	8.0	10.12	29.00	5.62	41.4	5.75	8.25	7.0	(2) .38	.44Ø x 1.00" Thru Slot	3.0	205	SRCS-1736
SRCS-1748			41.00		53.4							245	SRCS-1748
SRCS-1760			53.00		65.4							285	SRCS-1760
SRCS-1772			65.00		77.4							325	SRCS-1772
SRCS-1784			77.00		89.4							365	SRCS-1784
SRCS-1796			89.00		101.4							405	SRCS-1796
SRCS-17108			101.00		113.4							445	SRCS-17108
SRCS-17120			113.00		125.4							485	SRCS-17120

Notes

- SRCS Series tube bundle is removable. For replacement bundles consult factory.
- It is recommended that when a heat exchanger is disassembled, new gaskets and O-rings to be used in reassembly.
- Replacement gasket and O-Ring seal part numbers are available. For more information consult factory.

note: AIHTI reserves the right to make reasonable design changes without notice.
Copyright © 2019 - 2020 American Industrial Heat Transfer, Inc. 355 American Industrial Drive LaCrosse, VA 23950 tel: 434-757-1800 fax: 434-757-1810 email: sales@aihti com

SRCS-2000 Series *dimensions*

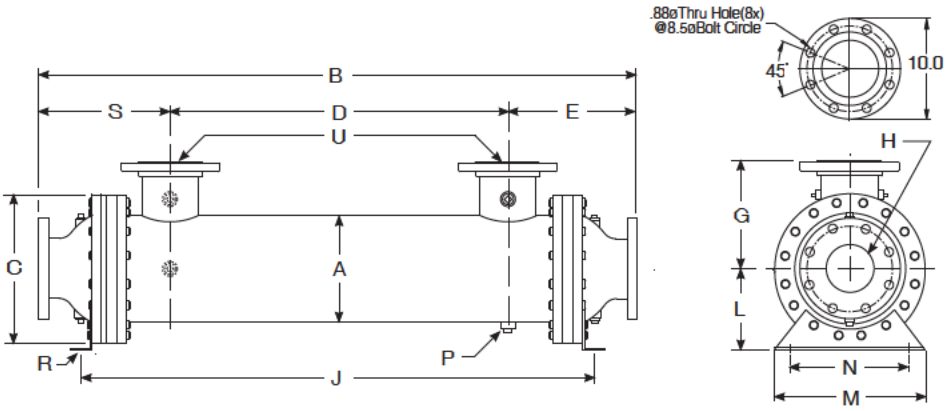

Model	B	S	E	H
SRCS-2036	53.40	14.38	13.90	5.0" ANSI Flange
SRCS-2048	65.40			
SRCS-2060	77.40			
SRCS-2072	89.40			
SRCS-2084	101.40			
SRCS-2096	113.40			
SRCS-20108	125.40			
SRCS-20120	137.40			

Single Pass (SP)

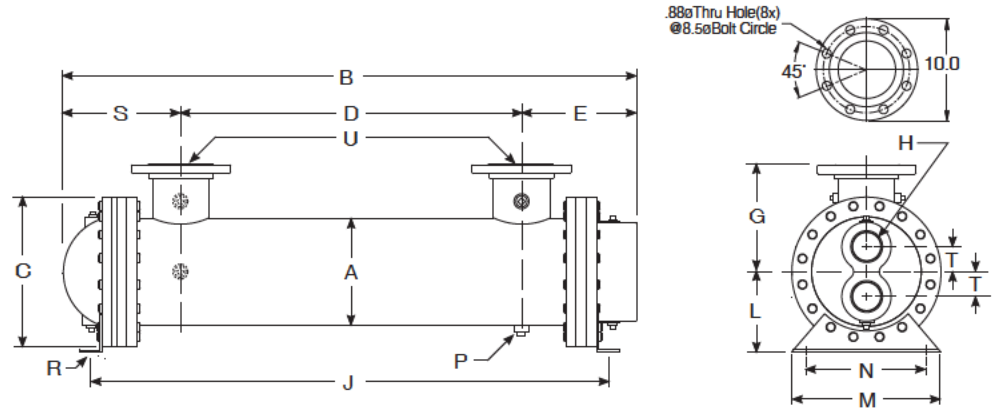

Model	B	E	H NPT	T
SRCS-2036	49.2	11.94	3.00	2.50
SRCS-2048	61.2			
SRCS-2060	73.2			
SRCS-2072	85.2			
SRCS-2084	97.2			
SRCS-2096	109.2			
SRCS-20108	121.2			
SRCS-20120	133.2			

Two Pass (TP)

COMMON DIMENSIONS & WEIGHTS

Model	A	C	D	G	J	L	M	N	P NPT	R	U	Weight	Model
SRCS-2036	10 75	15.00	26.00	10.75	44.63	8.0	12.0	5.0	(4x) .50	.75"Ø x 1.25" Thru Slot	4.00" ANSI Flange 150# RF	720	SRCS-2036
SRCS-2048			38.00		56.63							780	SRCS-2048
SRCS-2060			50.00		68.63							840	SRCS-2060
SRCS-2072			62.00		80.63							900	SRCS-2072
SRCS-2084			74.00		92.63							960	SRCS-2084
SRCS-2096			86.00		104.63							1020	SRCS-2096
SRCS-20108			98.00		116.63							1080	SRCS-20108
SRCS-20120			110.00		128.63							1150	SRCS-20120

Notes

- SRCS Series tube bundle is removable. For replacement bundles consult factory.
- It is recommended that when a heat exchanger is disassembled, new gaskets and O-rings to be used in reassembly.
- Replacement gasket and O-Ring seal part numbers are available. For more information consult factory.

note: AIHTI reserves the right to make reasonable design changes without notice.
Copyright © 2019 - 2020 American Industrial Heat Transfer, Inc. 355 American Industrial Drive LaCrosse, VA 23950 tel: 434-757-1800 fax: 434-757-1810 email: sales@aihti.com

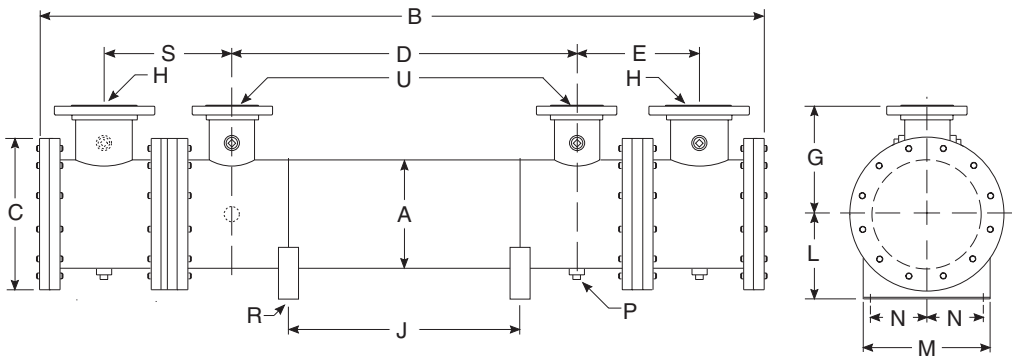

Single Pass (SP)

Model	B	E	H
SRCS-2436	70.63	15.56	8.0 ANSI Flange 150# RF
SRCS-2448	82.63		
SRCS-2460	94.63		
SRCS-2472	106.63		
SRCS-2484	118.63		
SRCS-2496	130.63		
SRCS-24108	142.63		
SRCS-24120	154.63		
SRCS-24132	166.63		
SRCS-24144	178.63		
SRCS-24156	190.63		

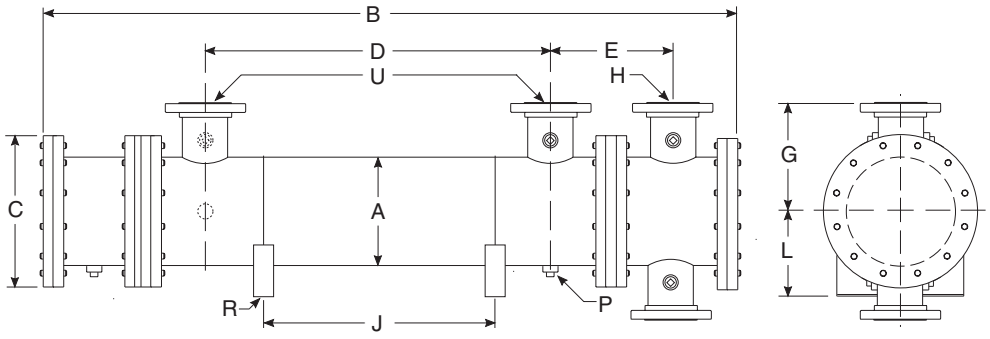

Two Pass (TP)

Model	B	E	H
SRCS-2436	70.63	15.56	6.0 ANSI Flange 150# RF
SRCS-2448	82.63		
SRCS-2460	94.63		
SRCS-2472	106.63		
SRCS-2484	118.63		
SRCS-2496	130.63		
SRCS-24108	142.63		
SRCS-24120	154.63		
SRCS-24132	166.63		
SRCS-24144	178.63		
SRCS-24156	190.63		

COMMON DIMENSIONS & WEIGHTS

Model	A	C	D	G	J	L	M	N	P NPT	R	U	Weight	Model
SRCS-2436	12.75	16.25	24.00	11.38	31.00	12.00	12.75	5.00	.50 (10x)	.75"Ø x 1.00" Thru Slot	6.0 ANSI Flange 150# RF	1040	SRCS-2436
SRCS-2448			36.00		43.00							1130	SRCS-2448
SRCS-2460			48.00		55.00							1221	SRCS-2460
SRCS-2472			60.00		67.00							1312	SRCS-2472
SRCS-2484			72.00		79.00							1402	SRCS-2484
SRCS-2496			84.00		91.00							1493	SRCS-2496
SRCS-24108			96.00		103.00							1584	SRCS-24108
SRCS-24120			108.00		115.00							1675	SRCS-24120
SRCS-24132			120.00		127.00							1766	SRCS-24132
SRCS-24144			132.00		139.00							1857	SRCS-24144
SRCS-24156			144.00		151.00							1869	SRCS-24156

Notes

- SRCS Series tube bundle is removable. For replacement bundles consult factory.
- It is recommended that when a heat exchanger is disassembled, new gaskets and O-rings to be used in reassembly.
- Replacement gasket and O-Ring seal part numbers are available. For more information consult factory.

note: AIHTI reserves the right to make reasonable design changes without notice.
Copyright © 2019 - 2020 American Industrial Heat Transfer, Inc. 355 American Industrial Drive LaCrosse, VA 23950 tel: 434-757-1800 fax: 434-757-1810 email: sales@aihti com

SRCS-3000 Series *dimensions*

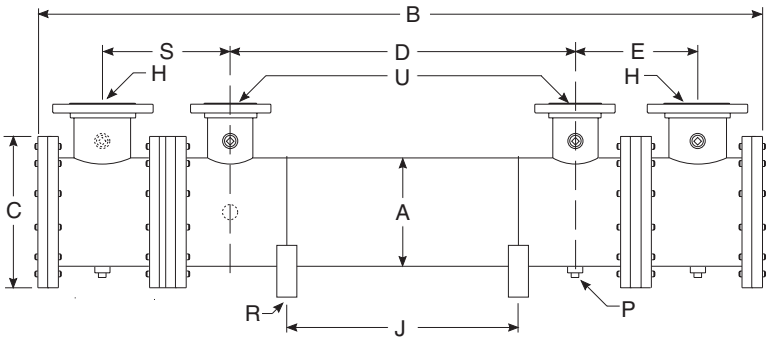

Single Pass (SP)

Model	B	E	H
SRCS-2836	70.63	16.56	8.00" ANSI Flange 150# RF
SRCS-2848	82.63		
SRCS-2860	94.63		
SRCS-2872	106.63		
SRCS-2884	118.63		
SRCS-2896	130.63		
SRCS-28108	142.63		
SRCS-28120	154.63		
SRCS-28132	166.63		
SRCS-28144	178.63		
SRCS-28156	190.63		
SRCS-28168	202.63		

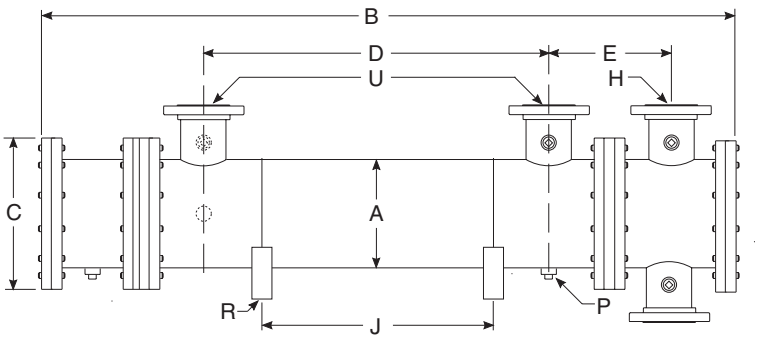

Two Pass (TP)

Model	B	E	H
SRCS-2836	70.63	16.56	6.00" ANSI Flange 150# RF
SRCS-2848	82.63		
SRCS-2860	94.63		
SRCS-2872	106.63		
SRCS-2884	118.63		
SRCS-2896	130.63		
SRCS-28108	142.63		
SRCS-28120	154.63		
SRCS-28132	166.63		
SRCS-28144	178.63		
SRCS-28156	190.63		
SRCS-28168	202.63		

COMMON DIMENSIONS & WEIGHTS

Model	A	C	D	G	J	L	M	N	P NPT	R	U	Weight	Model
SRCS-2836	14.00	18.00	22.00	12.00	31.00	13.00	14.00	5.00	.50 (10x)	.75"Ø x 1.00" Thru Slot	8.00" ANSI Flange 150# RF	1288	SRCS-2836
SRCS-2848			34.00		43.00							1400	SRCS-2848
SRCS-2860			46.00		55.00							1512	SRCS-2860
SRCS-2872			58.00		67.00							1624	SRCS-2872
SRCS-2884			70.00		79.00							1736	SRCS-2884
SRCS-2896			82.00		91.00							1848	SRCS-2896
SRCS-28108			94.00		103.00							1960	SRCS-28108
SRCS-28120			106.00		115.00							2072	SRCS-28120
SRCS-28132			112.00		127.00							2184	SRCS-28132
SRCS-28144			130.00		139.00							2296	SRCS-28144
SRCS-28156			142.00		151.00							2408	SRCS-28156
SRCS-28168			154.00		163.00							2520	SRCS-28168

Notes

- SRCS Series tube bundle is removable. For replacement bundles consult factory.
- It is recommended that when a heat exchanger is disassembled, new gaskets and O-rings to be used in reassembly.
- Replacement gasket and O-Ring seal part numbers are available. For more information consult factory.

note: AIHTI reserves the right to make reasonable design changes without notice.
Copyright © 2019 - 2020 American Industrial Heat Transfer, Inc. 355 American Industrial Drive LaCrosse, VA 23950 tel: 434-757-1800 fax: 434-757-1810 email: sales@aihti com

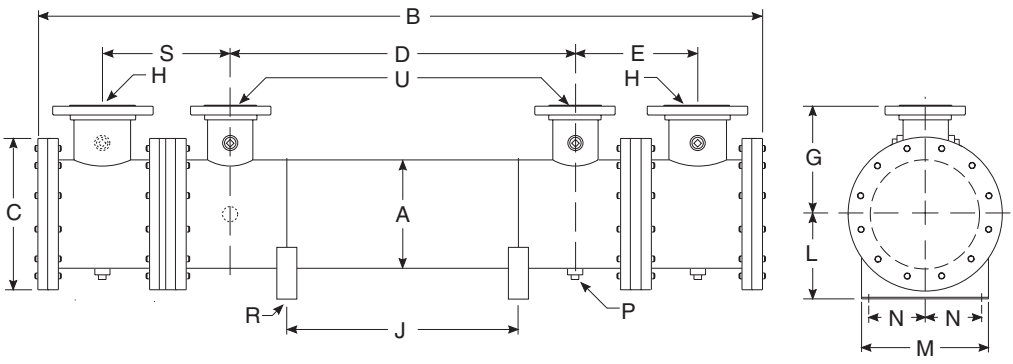

Single Pass (SP)

Model	B	E	H
SRCS-3248	87.63	18.13	10.00" ANSI Flange 150# RF
SRCS-3260	99.63		
SRCS-3272	111.63		
SRCS-3284	123.63		
SRCS-3296	135.63		
SRCS-32108	147.63		
SRCS-32120	159.63		
SRCS-32132	171.63		
SRCS-32144	183.63		
SRCS-32156	195.63		
SRCS-32168	207.63		

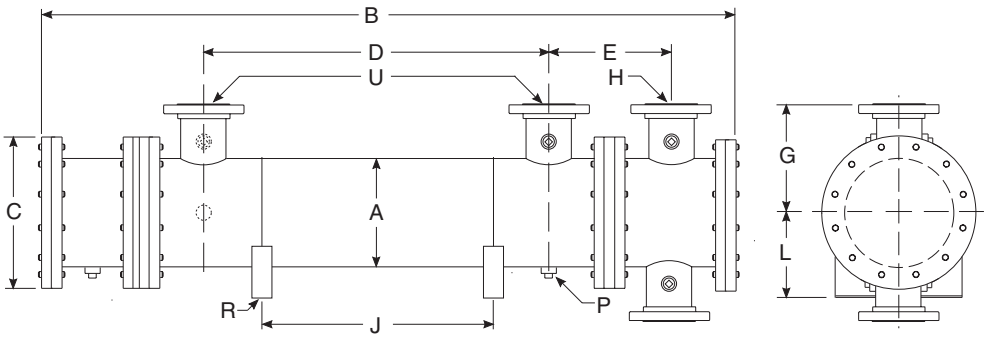

Two Pass (TP)

Model	B	E	H
SRCS-3248	87.63	18.13	6.00" ANSI Flange 150# RF
SRCS-3260	99.63		
SRCS-3272	111.63		
SRCS-3284	123.63		
SRCS-3296	135.63		
SRCS-32108	147.63		
SRCS-32120	159.63		
SRCS-32132	171.63		
SRCS-32144	183.63		
SRCS-32156	195.63		
SRCS-32168	207.63		

COMMON DIMENSIONS & WEIGHTS

Model	A	C	D	G	J	L	M	N	P NPT	R	U	Weight	Model
SRCS-3248	16.00	20.00	34.00	13.00	43.00	14.00	16.00	6.00	.50 (10x)	.781"Ø x 1.50" Thru Slot	8.00" ANSI Flange 150# RF	2377	SRCS-3248
SRCS-3260			46.00		55.00							1975	SRCS-3260
SRCS-3272			58.00		67.00							2121	SRCS-3272
SRCS-3284			70.00		79.00							2266	SRCS-3284
SRCS-3296			82.00		91.00							2414	SRCS-3296
SRCS-32108			94.00		103.00							2558	SRCS-32108
SRCS-32120			106.00		115.00							2705	SRCS-32120
SRCS-32132			112.00		127.00							2852	SRCS-32132
SRCS-32144			130.00		139.00							2999	SRCS-32144
SRCS-32156			142.00		151.00							3146	SRCS-32156
SRCS-32168			154.00		163.00							3293	SRCS-32168

Notes

- SRCS Series tube bundle is removable. For replacement bundles consult factory.
- It is recommended that when a heat exchanger is disassembled, new gaskets and O-rings to be used in reassembly.
- Replacement gasket and O-Ring seal part numbers are available. For more information consult factory.

note: AIHTI reserves the right to make reasonable design changes without notice.
Copyright © 2019 - 2020 American Industrial Heat Transfer, Inc. 355 American Industrial Drive LaCrosse, VA 23950 tel: 434-757-1800 fax: 434-757-1810 email: sales@aihti com

SRCS-3600 Series *dimensions*

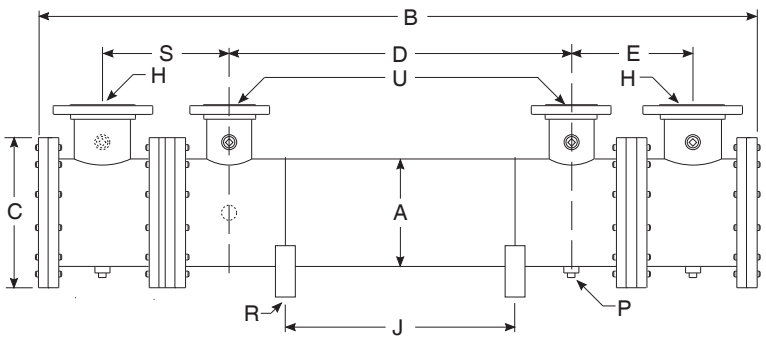

One Pass (TP)

Model	B	E	H
SRCS-3648	87.63	19.13	10.00" ANSI Flange 150# RF
SRCS-3660	99.63		
SRCS-3672	111.63		
SRCS-3684	123.63		
SRCS-3696	135.63		
SRCS-36108	147.63		
SRCS-36120	159.63		
SRCS-36132	171.63		
SRCS-36144	183.63		
SRCS-36156	195.63		
SRCS-36168	207.63		
SRCS-36180	219.63		

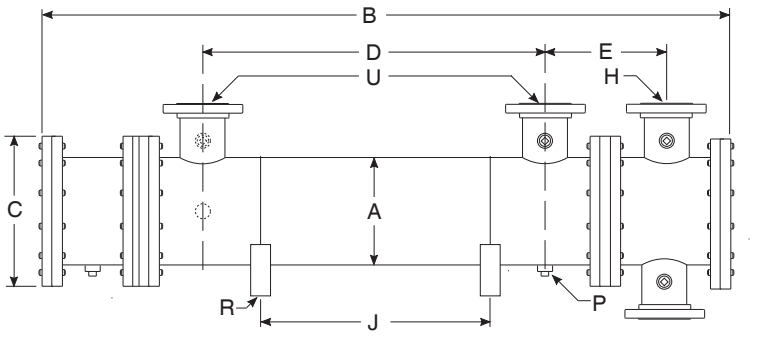

Two Pass (TP)

Model	B	E	H
SRCS-3648	87.63	19.13	8.00" ANSI Flange 150# RF
SRCS-3660	99.63		
SRCS-3672	111.63		
SRCS-3684	123.63		
SRCS-3696	135.63		
SRCS-36108	147.63		
SRCS-36120	159.63		
SRCS-36132	171.63		
SRCS-36144	183.63		
SRCS-36156	195.63		
SRCS-36168	207.63		
SRCS-36180	219.63		

Model	A	C	D	G	J	L	M	N	P NPT	R	U	Weight	Model
SRCS-3648	18.00	22.00	32.00	14.00	43.00	15.00	16.00	7.00	.50 (6X)	.781"Ø x 1.50" Thru Slot	10.00" ANSI Flange 150# RF	2314	SRCS-3648
SRCS-3660			44.00		55.00							2498	SRCS-3660
SRCS-3672			56.00		67.00							2684	SRCS-3672
SRCS-3684			68.00		79.00							2869	SRCS-3684
SRCS-3696			80.00		91.00							3054	SRCS-3696
SRCS-36108			92.00		103.00							3239	SRCS-36108
SRCS-36120			104.00		115.00							3424	SRCS-36120
SRCS-36132			116.00		127.00							3609	SRCS-36132
SRCS-36144			128.00		139.00							3794	SRCS-36144
SRCS-36156			140.00		151.00							3979	SRCS-36156
SRCS-36168			152.00		163.00							4164	SRCS-36168
SRCS-36180			164.00		175.00							4349	SRCS-36180

Notes

- SRCS Series tube bundle is removable. For replacement bundles consult factory.
- It is recommended that when a heat exchanger is disassembled, new gaskets and O-rings to be used in reassembly.
- Replacement gasket and O-Ring seal part numbers are available. For more information consult factory.

note: AIHTI reserves the right to make reasonable design changes without notice.
Copyright © 2019 - 2020 American Industrial Heat Transfer, Inc.
355 American Industrial Drive LaCrosse, VA 23950 tel: 434-757-1800 fax: 434-757-1810 email: sales@aihti com

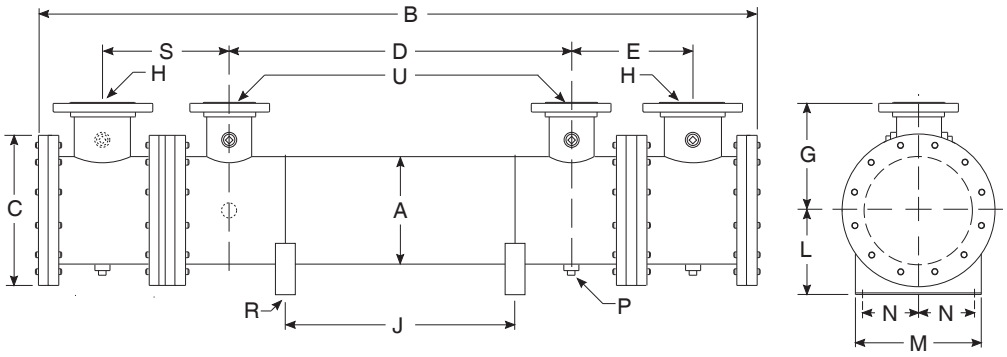

One Pass (TP)

Model	B	E	H
SRCS-4048	93.68	20.68	12.00" ANSI Flange 150# RF
SRCS-4060	105.68		
SRCS-4072	117.68		
SRCS-4084	129.68		
SRCS-4096	141.68		
SRCS-40108	153.68		
SRCS-40120	165.68		
SRCS-40132	177.68		
SRCS-40144	189.68		
SRCS-40156	201.68		
SRCS-40168	213.68		
SRCS-40180	225.68		

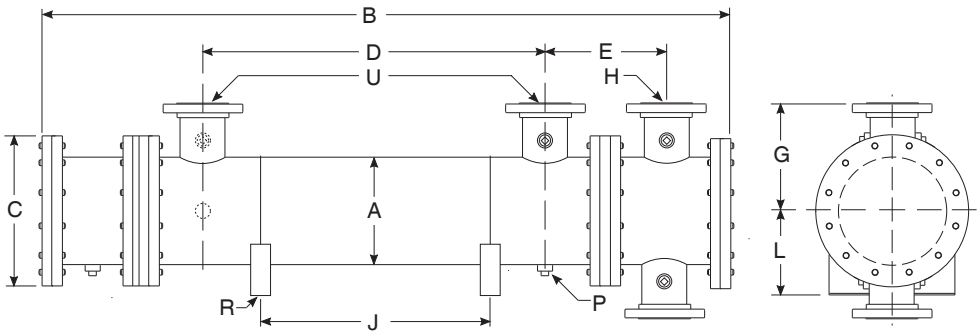

Two Pass (TP)

Model	B	E	H
SRCS-4048	93.68	20.68	8.00" ANSI Flange 150# RF
SRCS-4060	105.68		
SRCS-4072	117.68		
SRCS-4084	129.68		
SRCS-4096	141.68		
SRCS-40108	153.68		
SRCS-40120	165.68		
SRCS-40132	177.68		
SRCS-40144	189.68		
SRCS-40156	201.68		
SRCS-40168	213.68		
SRCS-40180	225.68		

COMMON DIMENSIONS & WEIGHTS

Model	A	C	D	G	J	L	M	N	P NPT	R	U	Weight	Model
SRCS-4048	20.00	25.00	32.00	16.00	43.00	17.00	20.00	8.00	.50 (6X)	.781"Ø x 1.50" Thru Slot	10.00" ANSI Flange 150# RF	2856	SRCS-4048
SRCS-4060			44.00		55.00							3085	SRCS-4060
SRCS-4072			56.00		67.00							3313	SRCS-4072
SRCS-4084			68.00		79.00							3542	SRCS-4084
SRCS-4096			80.00		91.00							3770	SRCS-4096
SRCS-40108			92.00		103.00							3999	SRCS-40108
SRCS-40120			104.00		115.00							4227	SRCS-40120
SRCS-40132			116.00		127.00							4456	SRCS-40132
SRCS-40144			128.00		139.00							4686	SRCS-40144
SRCS-40156			140.00		151.00							4916	SRCS-40156
SRCS-40168			152.00		163.00							5146	SRCS-40168
SRCS-40180			164.00		175.00							5376	SRCS-40180

Notes

- SRCS Series tube bundle is removable. For replacement bundles consult factory.
- It is recommended that when a heat exchanger is disassembled, new gaskets and O-rings to be used in reassembly.
- Replacement gasket and O-Ring seal part numbers are available. For more information consult factory.

note: AIHTI reserves the right to make reasonable design changes without notice.
Copyright © 2019 - 2020 American Industrial Heat Transfer, Inc. 355 American Industrial Drive LaCrosse, VA 23950 tel: 434-757-1800 fax: 434-757-1810 email: sales@aihti com

PIPING HOOK-UP

A ..... Hot fluid to be cooled
B ..... Cooled fluid
C ..... Cooling water in
D ..... Cooling water out

SP ..... Single Pass
TP ..... Two Pass

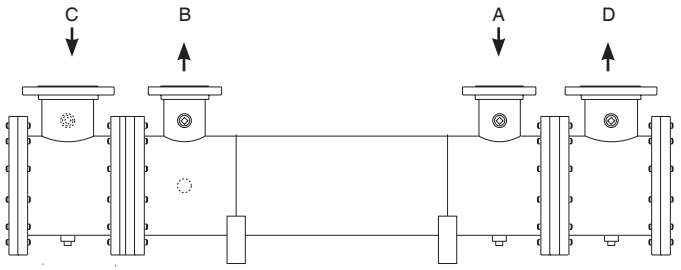

Single Pass

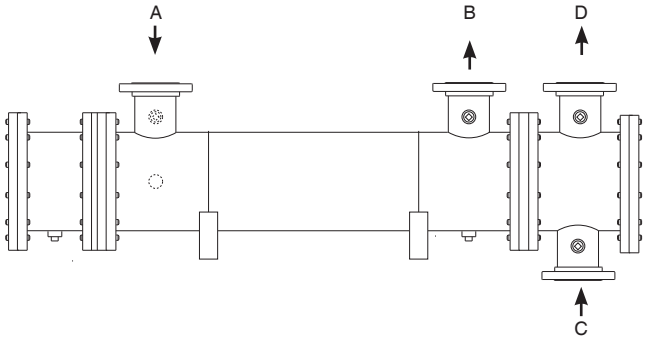

Two Pass

Receiving / Installation

a) Inspect unit for any shipping damage before uncrating. Indicate all damages to the trucking firms' delivery person, and mark it on the receiving bill before accepting the freight. Make sure that there is no visible damage to the outside surface of the heat exchanger. The published weight information located in this brochure is approximate. True shipment weights are determined at the time of shipping and may vary. Approximate weight information published herein is for engineering approximation purposes and should not be used for exact shipping weight. Since the warranty is based upon the unit date code located on the model identification tags, removal or manipulation of the identification tags will void the manufacturers warranty.

b) When handling the shell & tube heat exchanger, special care should be taken to avoid dropping the unit since mishandling could cause the heat exchanger to crack and leak externally. Mishandling of the unit is not covered under the manufacturers warranty. All units are shipped with partial wood/corrugated cardboard containers for safe handling.

c) Storage: American Industrial heat exchangers are protected against the elements during shipment. If the heat exchanger cannot be installed and put into operation immediately upon receipt, certain precautions are required to prevent deterioration during storage. The responsibility for integrity of the heat exchanger(s) is assumed by the user. American Industrial will not be responsible for damage, corrosion, or other deterioration of the heat exchanger during transit or storage.

Proper storage practices are important when considering the high costs of repair or replacement, and the possible delays for items which require long lead times for manufacture. The following listed practices are provided solely as a convenience to the user, who shall make their own decision on whether to use all or any of them.

1) Heat exchangers not to be placed in immediate service, require precautionary measures to prevent corrosion or contamination.
2) Heat exchangers made of ferrous materials, may be pressure-tested using compressed air at the factory. Residual oil coating on the inside surfaces of the heat exchanger(s) as a result of flushing does not discount the possibility of internal corrosion. Upon receipt, fill the heat exchanger(s) with the appropriate grade of oil or apply a corrosion preventing inhibitor for storage.
3) Corrosion protection compounds for interior surfaces for long term storage or other applications are applied solely at the request of customers. Upon request, American Industrial can provide a customer approved corrosion preventative if available when included in the original purchase order specifications.
4) Remove all dirt, water, ice, or snow and wipe dry before moving heat exchanger(s) into storage. Heat exchangers are generally shipped empty, open drain plugs to remove any accumulated condensation moisture, then reseal. Accumulation of moisture usually indicates corrosion has already started and remedial action should be taken.
5) Store in a covered, environmentally stable area. The ideal storage environment for heat exchangers is in a dry, low-humidity atmosphere which is sealed to prevent the entry of blowing dust, rain, or snow. Maintain in atmospheric temperatures between 70°F and 105°F (Large temperature swings may cause condensation and moisture to form on steel components, threads, shell, etc...) Use thermometers and humidity indicators and maintain the atmosphere at 40% relative humidity, or lower.

d) Standard Enamel Coating: American Industrial provides its standard products with a normal base coat of oil base air cure enamel paint. The enamel paint is applied as a temporary protective and esthetic coating prior to shipment. While the standard enamel coating is durable, American Industrial does not warranty it as a long-term finish coating. It is strongly suggested that a more durable final coating be applied after installation or prior to long-term storage in a corrosive environment to cover any accidental scratches, enhance esthetics, and further prevent corrosion. It is the responsibility of the customer to provide regular maintenance against chips, scratches, etc... and regular touch up maintenance must be provided for long-term benefits and corrosion prevention.

e) Special Coatings: American Industrial offers as customer options, Air-Dry Epoxy, and Heresite (Air-Dry Phenolic) coatings at additional cost. American Industrial offers special coatings upon request, however American Industrial does not warranty coatings to be a permanent solution for any equipment against corrosion. It is the responsibility of the customer to provide regular maintenance against chips, scratches, etc... and regular touch up maintenance must be provided for long-term benefits and corrosion prevention.

f) American Industrial recommends that the equipment supplied should be installed by qualified personnel who have solid understanding of system design, pressure and temperature ratings, and piping assembly. Verify the service conditions of the system prior to applying any shell & tube heat exchanger. If the system pressure or temperature does not fall within the parameters on model rating tag located on the heat exchanger, contact our factory prior to installation or operation.

note: AIHTI reserves the right to make reasonable design changes without notice.
Copyright © 2019 - 2020 American Industrial Heat Transfer, Inc. 355 American Industrial Drive LaCrosse, VA 23950 tel: 434-757-1800 fax: 434-757-1810 email: sales@aihti com

g) Plan the installation to meet the requirements indicated on the piping installation diagram as illustrated above. It is recommended to put the hot fluid to be cooled through the shell side and the cold fluid through the tube side. The indicated port assembly sequence in the installation diagram maximizes the performance, and minimizes the possibility of thermal shock. In instances where the fluids are required to be reversed, *hot fluid in the tubes and cold fluid in the shell* the heat exchanger will work with reduced performance. Installation may be vertical or horizontal or a combination thereof. However, the installation must allow for complete draining of the heat exchanger regardless of Two Pass or four pass construction. Complete drainage is important to prevent the heat exchanger from freezing, over-heating of a fluid, or mineral deposit buildup.
For removable bundle heat exchangers, provide sufficient clearance at the stationary tube-sheet end to allow for the removal of the tube bundle from the shell. Channel cover can be removed to aid in cleaning the tubes without disassembling the tube bundle. For more information please contact American Industrial.

h) It is recommended to use flexible hose wherever possible to reduce vibration and allow slight movement. However, hoses are not required. Hydraulic carrying lines should be sized to handle the appropriate flow and to meet system pressure drop requirements based upon the systems parameters, and not based upon the units supply and return connection size. We recommend that a low cracking pressure direct acting relief valve be installed at the heat exchanger inlet to protect it from pressure spikes by bypassing oil in the event the system experiences a high flow surge. If preventative filtration is used it should be located ahead of the cooler on both shell and tube side to catch any scale or sludge from the system before it enters the cooler. Failure to install filters ahead of the heat exchanger could lead to possible heat exchanger failure due to high pressure if the system filters plug.

i) Standard shell & tube coolers are built with a rolled tube-sheet construction. However, the differential operating temperature between the entering shell side fluid and the entering tube side fluid should not exceed 150°F. If this condition exists, a severe thermal shock could occur leading to product failure and mixing of the fluids. For applications with a differential temperatures of 150°F or more, we recommend using a series with a floating tube-sheet, u-tube, or expansion joint to reduce the potential for the effects of thermal shock.

j) Water requirements vary from location to location. If the source of cooling water is from other than a municipal water supply, it is recommended that a water strainer be installed ahead of the heat exchanger to prevent dirt and debris from entering and clogging the flow passages. If a water modulating valve is used it is recommended to be installed at the inlet to the cooler to regulate the water flow.

k) For steam service, or other related applications, please consult our engineering department for additional information.

Maintenance
a) Inspect the heat exchanger for loosened bolts, connections, rust spots, corrosion, and for internal or external fluid leakage. Any corroded surfaces should be cleaned and recoated with paint.

b) Shell side: In many cases with clean hydraulic system oils it will not be necessary to flush the interior of the shell side of the cooler. In circumstances where the quality of hydraulic fluid is in question, the shell side should be disconnected and flushed on a yearly basis with a clean flushing oil/solvent to remove any sludge that has been deposited. For severe cases where the unit is plugged and cannot be flushed clean with solvent, the heat exchanger should be replaced to maintain the proper cooling performance.

c) Tube side: In many cases it will be necessary to clean the tube side of the heat exchanger due to poor fluid quality, debris, calcium deposits, corrosion, mud, sludge, seaweed, etc.... To clean the tube side, flush with clean water or any good quality commercial cleaner that does not attack the particular material of construction. With straight tube heat exchangers you can use a rod to carefully push any debris out of the tubes.

d) Zinc anodes are normally used to reduce the risk of failure due to electrolysis. Zinc anodes are a sacrificial component designed to wear and dissolve through normal use. Normally, zinc anodes are applied to the water supply side of the heat exchanger. Depending upon the amount of corrosive action, one, two, three, or more anodes can be applied to help further reduce the risk of failure. American Industrial Heat Transfer, Inc. offers zinc anodes as an option, to be specified and installed at the request our customers. It is the responsibility of the customer to periodically check and verify the condition of the zinc anode and replace it as needed.

Applications vary due to water chemical makeup and quality, material differences, temperature, flow rate, piping arrangements, and machine grounding. For those reasons, zinc anodes do not follow any scheduled factory predetermined maintenance plan moreover they must be checked routinely by the customer, and a maintenance plan developed based upon the actual wear rate.

If substantial wear occurs or zinc dissolves without replacement, premature failure or permanent damage may occur to the heat exchanger. American Industrial does not warranty customer applications. It is the responsibility of the customer to verify and apply the proper system materials of construction and overall system requirements. Failures resulting from properly applied or misapplied use of zinc anode(s) into non-specified or specified applications will be the sole responsibility of the customer.

e) A routine maintenance schedule should be developed and adjusted to meet your systems requirements based upon water quality, etc... .Failure to regularly maintain and clean your heat exchanger can result in a reduction in operational performance and life expectancy.

Note: *Since applications can vary substantially, the installation and maintenance information contained in this catalog should be used as a basic guideline. The safe installation, maintenance, and use of any American Industrial Heat Transfer, Inc. heat exchanger are solely the responsibility of the user.*

ACCESSORIES: THERMOSTATIC MODULATING WATER VALVE WITH BULB WELL ASSEMBLY

(for Shell & Tube Heat Exchangers And Air/Oil Coolers)

See Page 273

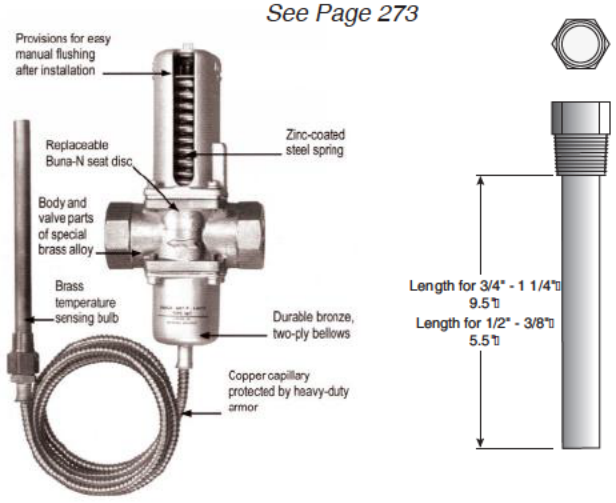

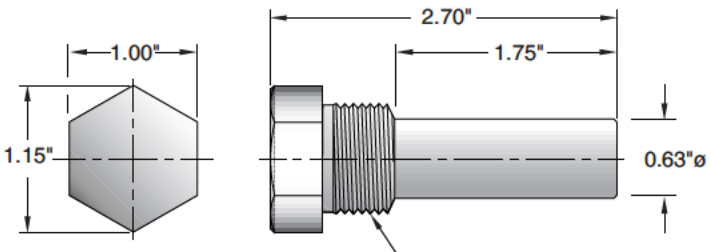

1/2" NPT Zinc Anode PN: 301-0003
SRCS-1700 thru SRCS-4800

Copyright @ 2019 - 2020 American Industrial Heat Transfer, Inc.
355 American Industrial Drive LaCrosse, VA 23950 tel: 434-757-1800 fax: 434-757-1810 email: sales@aihti.com

cincinnati fan



HP

SERIES II

HIGH PRESSURE BLOWERS

7697 Snider Road, Mason, OH 45040-9135

Telephone: 513-573-0600

Visit us at www.cincinnatifan.com for more information.

Cat. No. HP-II-908

Supersedes HP-II-1104

cincinnati fan

A Company That Stands Behind Its Product

Since the founding of **Cincinnati Fan** in 1956, the company's mission has been to provide quality products at competitive prices, backed by dependable service.

This mission is carried out by specializing in the market for industrial air handling products up to 125 HP. But specialization does not mean the product line is small. **Cincinnati Fan** offers a wide variety of standard and customized products, production flexibility, and customer responsiveness.

Cincinnati Fan has over 170 experienced sales engineers across the U.S. and Canada ready to serve your air handling needs.

Cincinnati Fan can provide:

- Technical evaluation for correct performance conditions.
- Review of air stream and ambient conditions that require special attention.
- Selection of proper components to meet required design specifications.
- Selection of proper accessories.

Cincinnati Fan operates in a modern facility specifically designed for world class manufacturing enabling us to build standard products to order, including accessories, and ship within 10-15 working days.

With support like this, you can be sure your **Cincinnati Fan** product will be well-built and will provide maximum dependability and longevity.

Visit us at www.cincinnatifan.com for more information.

SPECIFICATIONS FOR HP SERIES II BLOWERS

Radial bladed pressure blowers shall be Cincinnati Fan HP, Series II, Model _____, Arrangement _____ Capacity: _____ CFM, _____ Static Pressure at standard conditions. Operating conditions: _____°F, _____Ft. Altitude.

Wheels shall be dynamically balanced to assure smooth operation. Fan motor and bearing vibration levels shall not exceed 1.5 mils displacement at 3500 RPM. Shafts shall be turned, ground and polished steel (or stainless steel). All fan shafts shall receive a rust preventive coating prior to shipment. All fans shall be test run at factory before shipping.

All construction gauges shall be as shown in Cincinnati Fan's HP, Series II catalog, page 16. The blower housing shall be continuously welded and supported to minimize pulsation at all conditions. Fan bearings shall be grease-lubricated, heavy-duty, self-aligning ball bearings mounted in cast iron pillow blocks. V-belt drives shall be selected for a minimum of 1.3 times nominal horsepower.

All parts in contact with airstream shall be standard steel, aluminum or stainless steel as specified.

Before painting, steel parts shall be cleaned by detergent wash, phosphatized and painted with oven cured gray enamel.

The following accessories shall be included: (See page 5 for optional accessories).

SIX STANDARD ARRANGEMENTS

ARRANGEMENT 1

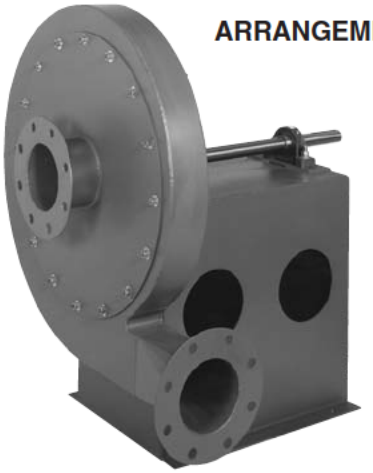

ARRANGEMENT 8
(Shown with shaft guard removed)

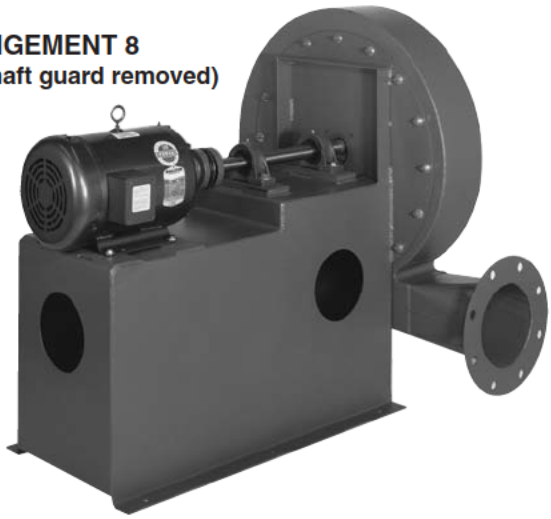



ARRANGEMENT 9
(Shown with optional shaft guard)

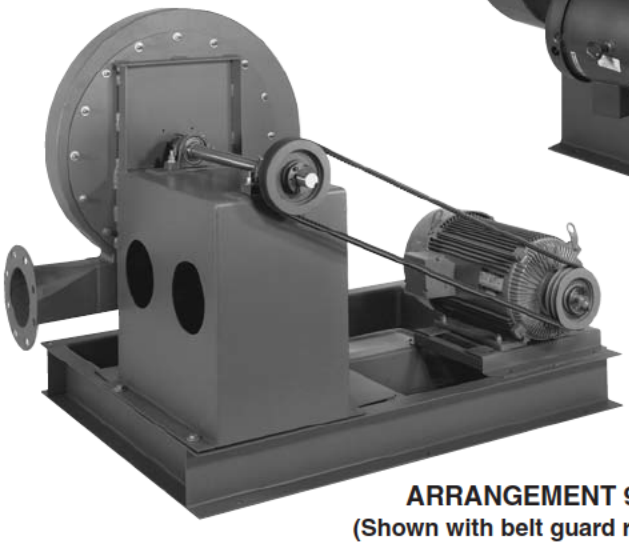

ARRANGEMENT 9CB
(Shown with belt guard removed)



ARRANGEMENT 4
(Arrangement 4HM not shown)

ARRANGEMENT 1 (V-BELT DRIVE)

- Motor not mounted on bearing base.
- Wheel mounted on fan shaft with two pillow block bearings.
- Maximum temperature of standard design: 300°F; high temperature design: 750°F.

ARRANGEMENT 8 (DIRECT DRIVE)

- Motor mounted on motor base extending beyond the bearing base.
- Wheel mounted on fan shaft with two pillow block bearings.
- Maximum temperature of standard design: 300°F; high temperature design: 750°F.
- For dimensions, contact your local Cincinnati Fan sales office.

ARRANGEMENT 9 (V-BELT DRIVE)

- Motor mounted on an adjustable slide base on the side of the bearing base.
- Wheel mounted on fan shaft with two pillow block bearings.
- Maximum temperature of standard design: 300°F; high temperature design: 750°F.

ARRANGEMENT 9CB (V-BELT DRIVE)

- Same as Arrangement 9 except motor and fan are mounted on a common channel base.
- Maximum temperature of standard design: 300°F; high temperature design: 750°F.

ARRANGEMENT 4 & 4HM (DIRECT DRIVE)

- Motor mounted on motor base.
- Wheel mounted on motor shaft.
- Maximum temperature of standard design: 200°F; high temperature design: 400°F.
- For arrangement 4HM, see page 16.

HP SERIES II FEATURES

A) Wheels are fabricated of heavy-gauge, high-strength steel to assure long lasting, efficient operation. (Not shown.)

B) Turned, ground and polished shafting assures smooth operation. A rust preventative coating is applied prior to shipment.

C) Heavy-duty, self-aligning ball bearings in relubricatable cast-iron pillow blocks. Bearings are selected for optimal performance depending on fan size.

D) Bearing base is heavy steel construction with internal supports to maximize rigidity and assure long equipment life. Arrangement #1 fans can be converted to Arrangement #9 with the addition of the motor slide base.

E) Flanged inlet and outlet standard. Drilled per ANSI 125 pound and ASA 150 pound specifications with holes straddling centers. See ★ note on page 18.

F) Reversible housing provides increased configuration flexibility. Removable side plates allow the wheel to be removed from the motor or inlet side of the housing. Housings are rotatable in 45 degree increments.

G) Teflon shaft seal is standard. Ceramic seal is used for applications above 400°F. (Not shown.)

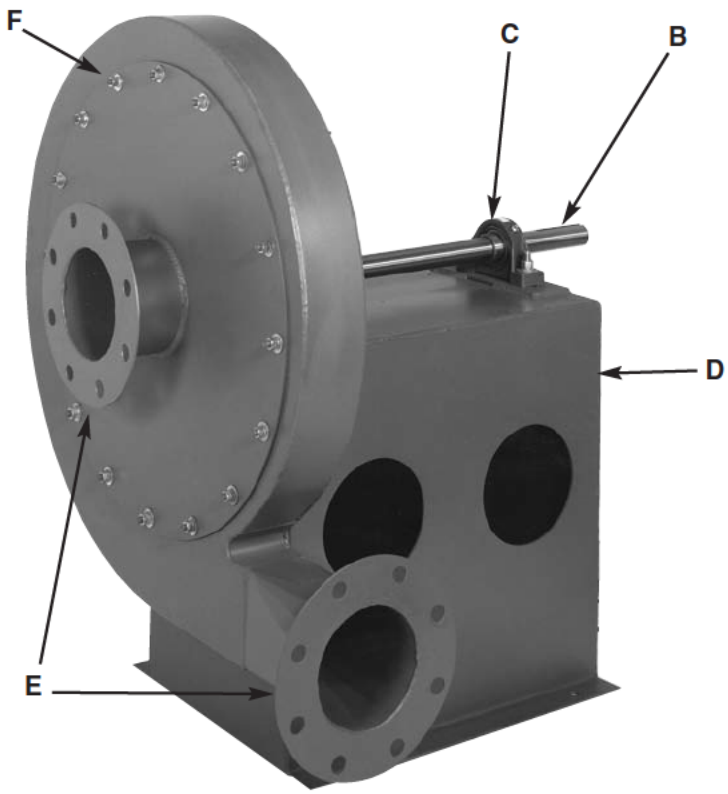

SPARK-RESISTANT CONSTRUCTION

Type A: All parts in contact with airstream are of nonferrous material. **Maximum temperature 200°F.** Consult factory.

Type B: Aluminum wheel and aluminum rubbing ring for motor shaft or fan shaft. **Maximum temperature 200°F.**

Type C: Consists of an aluminum plate on drive side of the fan and aluminum inlet plate assembly. **Maximum temperature 750°F.**

⚠ WARNING

The use of aluminum or aluminum alloys in the presence of steel which has been allowed to rust requires special consideration. Research by the U.S. Bureau of Mines and others has shown that aluminum impellers rubbing on rusty steel may cause high intensity sparking.

The use of the above construction in no way implies a guarantee of safety for any level of spark resistance. Spark resistant construction also does not protect against ignition of explosive gases caused by catastrophic failure or from any airstream material that may be present in a system.

OPTIONAL ACCESSORIES



Belt Guard
Belt guard standard on Arrangement 9 and 9CB only. **Painted safety yellow.**



Drain Connection
3/4" pipe coupling welded to lowest point of housing. Not required on BH discharge position.



Inspection Door
Inspection door available on all sizes except 4A, 4C and 6C. Rubber gasket standard to 250°F. Silicone gasket standard at temperatures of 250°F. to 750°F.



Inlet Bell
With OSHA type guard.



Outlet Guard
OSHA type.



Shaft and/or Heat Slinger Guard
Guard available on Arrangement 1, 9 and 9CB. Standard on Arrangement 8. Covers bearings and shaft between fan housing and belt guard. Bearings relubricatable through guard. **Painted safety yellow.**

⚠ DANGER

All fans & blowers shown have rotating parts and pinch points. Severe personal injury can result if operated without guards. Stay away from rotating equipment unless it is disconnected or locked out from its power source. Read operating instructions.

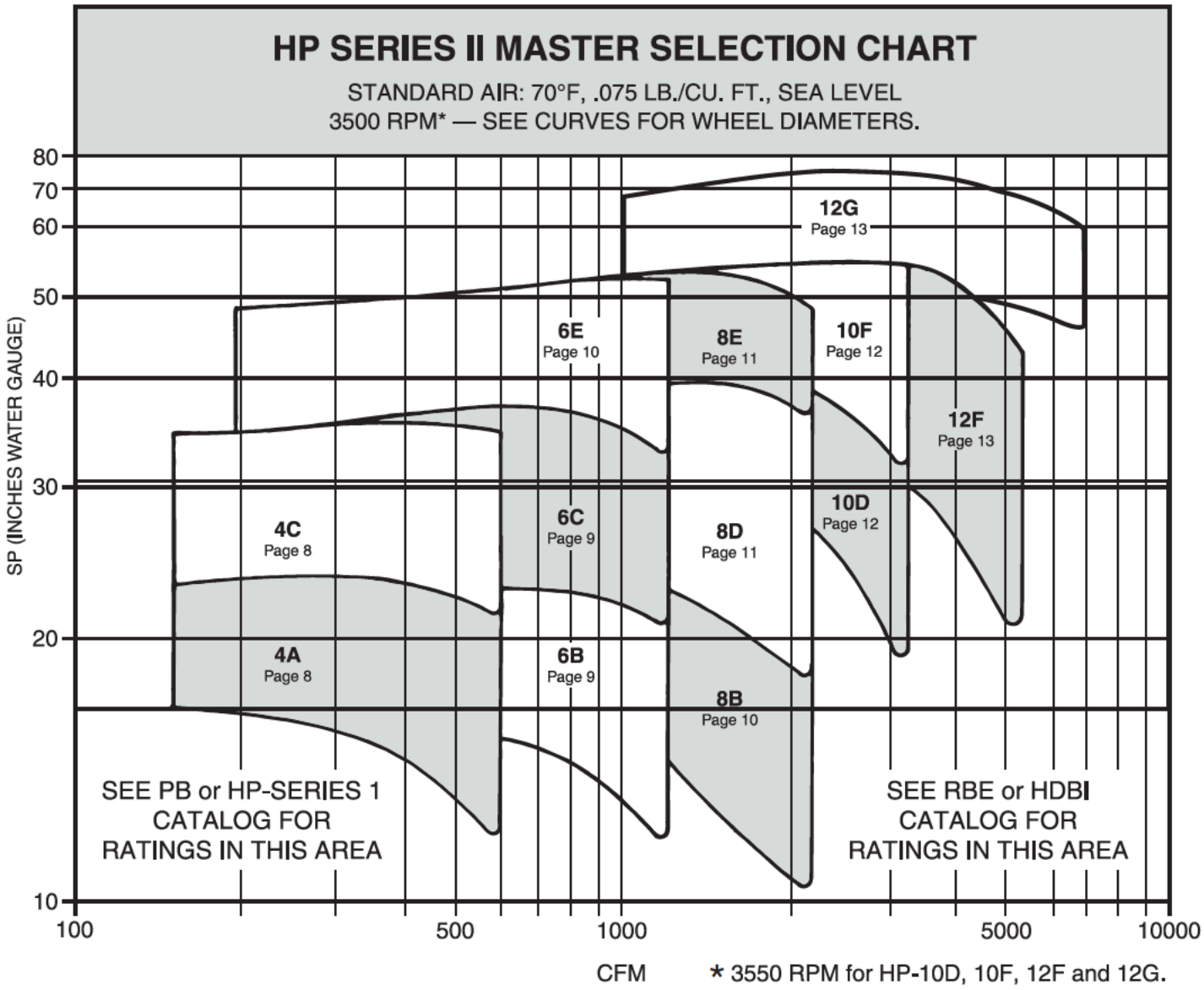

HOW TO USE THE MASTER SELECTION CHART

The above chart is intended to guide you to the correct fan for a desired performance rating. This chart was prepared for standard air (70° F., 29.92" Hg barometric pressure and .075 lbs. per cubic foot density.)

All fans were tested with an inlet bell. All performance curves in this catalog are for standard air, at the fan inlet, entering the inlet (whether belled or ducted) with static pressure measured at the discharge.

Corrections are required for temperature and/or altitude and rarefication. See page 7 for correction factors.

Rarefication: When air is pulled into a blower inlet (negative pressure) the air molecules are "stretched out", or rarefied, and become less dense than at the blower discharge where the air is compressed.

Catalog ratings may be used directly, without correction, for static pressures defined at the fan discharge. For static pressures defined at the fan inlet (i.e., negative pressures), a correction is typically only made for inlet suction pressures greater than 15" W.G. See page 7 for details.

HIGH TEMPERATURE CONSTRUCTION

Arrangements 4 and 4 HM

Up to 200°F. **Standard fan construction.**

201°- 400°F. Standard fan with shaft seal, heat slinger, slinger guard and external hub on wheel.

Arrangements 1, 8, 9 and 9CB

Up to 300°F. **Standard fan construction.**

301°- 400°F. Standard fan with heat slinger and shaft/slinger guard.

401°- 600°F. Standard fan with heat slinger, shaft/slinger guard and high temperature shaft seal, gasketing and paint.

601°- 750°F. Standard fan with heat slinger, shaft/slinger guard, 316SS fan shaft and high temperature shaft seal, gasketing and paint.

TEMPERATURE RANGE	MAXIMUM RPM REDUCTION FACTOR†
Up to 175°F.	0%
176°-200°	2%
201°-300°	4%
301°-400°	7%
401°-500°	11%
501°-600°	15%
601°-700°	20%
701°-750°	30%

† Steel wheels only.

TEMPERATURE - ALTITUDE CONVERSIONS

AIR TEMP. F°	ALTITUDE IN FEET ABOVE SEA LEVEL										
	0	1000	2000	3000	4000	5000	6000	7000	8000	9000	10000
0°	.87	.91	.94	.98	1.01	1.05	1.09	1.13	1.17	1.22	1.26
40°	.94	.98	1.02	1.06	1.10	1.14	1.19	1 23	1.28	1.32	1.36
70°	1.00	1.04	1.08	1.12	1.16	1.20	1.25	1.30	1.35	1.40	1.45
80°	1.02	1.06	1.10	1.14	1.19	1.23	1.28	1.33	1.38	1.43	1.48
100°	1.06	1.10	1.14	1.19	1.23	1.28	1.33	1.38	1.43	1.48	1.54
120°	1.09	1.14	1.18	1.23	1.28	1.32	1.38	1.43	1.48	1.53	1.58
140°	1.13	1.18	1.22	1.27	1.32	1.37	1.42	1.48	1.54	1.58	1.65
160°	1.17	1.22	1.26	1.31	1.36	1.42	1.47	1.53	1.59	1.64	1.70
180°	1.21	1.26	1.30	1.36	1.41	1.46	1.52	1.58	1.64	1.70	1.75
200°	1.25	1.29	1.34	1.40	1.45	1.51	1.57	1.63	1.69	1.75	1.81
250°	1.34	1.39	1.45	1.50	1.56	1.62	1.68	1.74	1.82	1.88	1.94
300°	1.43	1.49	1.55	1.61	1.67	1.74	1.80	1.87	1.94	2.00	2.08
350°	1.53	1.59	1.65	1.72	1.78	1.85	1.92	2.00	2.07	2.14	2.22
400°	1.62	1.69	1.75	1.82	1.89	1.96	2.04	2.12	2.20	2.27	2.35
450°	1.72	1.79	1.86	1.93	2.00	2.08	2.16	2.24	2.33	2.41	2.50
500°	1.81	1.88	1.96	2.03	2.11	2.19	2.28	2.36	2.46	2.54	2.62
550°	1.91	1.98	2.06	2.14	2.22	2.30	2.40	2.49	2.58	2.68	2.77
600°	2.00	2.08	2.16	2.24	2.33	2.42	2.50	2.61	2.71	2.80	2.90
650°	2.10	2.18	2.26	2.35	2.44	2.54	2.63	2.74	2.84	2.94	3.04
700°	2.19	2.27	2.36	2.46	2.55	2.65	2.75	2.86	2.97	3.06	3.18
750°	2.28	2.37	2.47	2.56	2.66	2.76	2.87	2.98	3.10	3.19	3.31

Fan performance tables are developed using standard air which is 70°F., 29.92" barometric pressure and .075 lbs. per cubic foot. Density changes resulting from temperature or barometric pressure variations (such as high altitudes) must be corrected to standard conditions before selecting a fan based on standard performance data.

Temperature and/or altitude conversion factors are used in making corrections to standard conditions.

EXAMPLE:

Select an HP Series II fan to deliver 4800 CFM at 30" SP at 160°F., and 7000' altitude.

STEP 1. From the table, conversion factor is 1.53.

STEP 2. Correct static pressure is:
1.53 x 30" SP = 45.9" SP at standard conditions.

STEP 3. Check HP, Series II catalog for 4800 CFM at 45.9" SP. We select a HP12F with a 26" diameter wheel at 3500 RPM and 56 BHP.

STEP 4. Correct the BHP for the lighter air:
56 ÷ 1.53 = 36.6 BHP. A 40 HP motor will suffice at 160° F., and 7000' but not at standard conditions. Special motor insulation may be required above 3500 feet altitude. Consult factory.

SUCTION PRESSURE CORRECTIONS

The two tables at the right give corrected static pressures for suction pressure (rarefication). These corrected static pressures are for standard air (70°F., 29.92" Hg barometric pressure and .075 lbs. per cubic foot density) at the blower inlet.

If the inlet air temperature and/or altitude are different, make those corrections as shown above and then correct for rarefication.

Suction Pressure in Inches W.G.	Corrected Static Pressure
16	16.7
18	18.8
20	21.0
22	23.3
24	25.5
26	27.8
28	30.1
30	32.4
32	34.7
34	37.1
36	39.5
38	41.9
40	44.4
42	46.8

Suction Pressure in Inches W.G.	Corrected Static Pressure
44	49.3
46	51.9
48	54.4
50	57.0
52	59.6
54	62.2
56	64.9
58	67.6
60	70.4
62	73.2
64	75.9
66	78.8
68	81.6
70	84.5

DIRECT DRIVE RATINGS @ 3500 RPM

CFM and BHP at Static Pressure Shown • Ratings at 70°F., .075 Density, Sea Level

Model HP-4A

BHP values are shown. Note "▶" is minimum HP motor needed for required starting torque (WR^2) for steel wheels. See page 14.

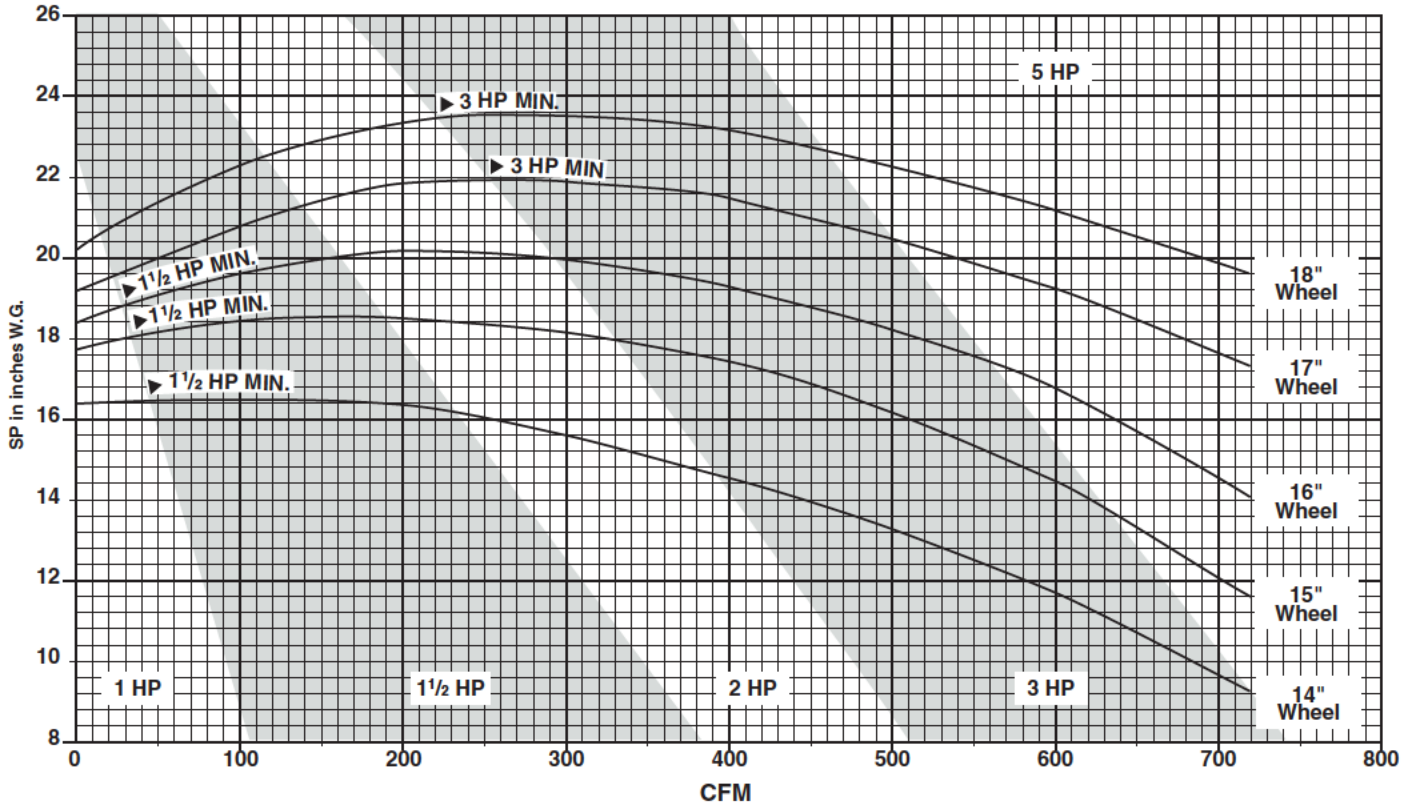

Model HP-4C

BHP values are shown. Note "▶" is minimum HP motor needed for required starting torque (WR^2) for steel wheels. See page 14.

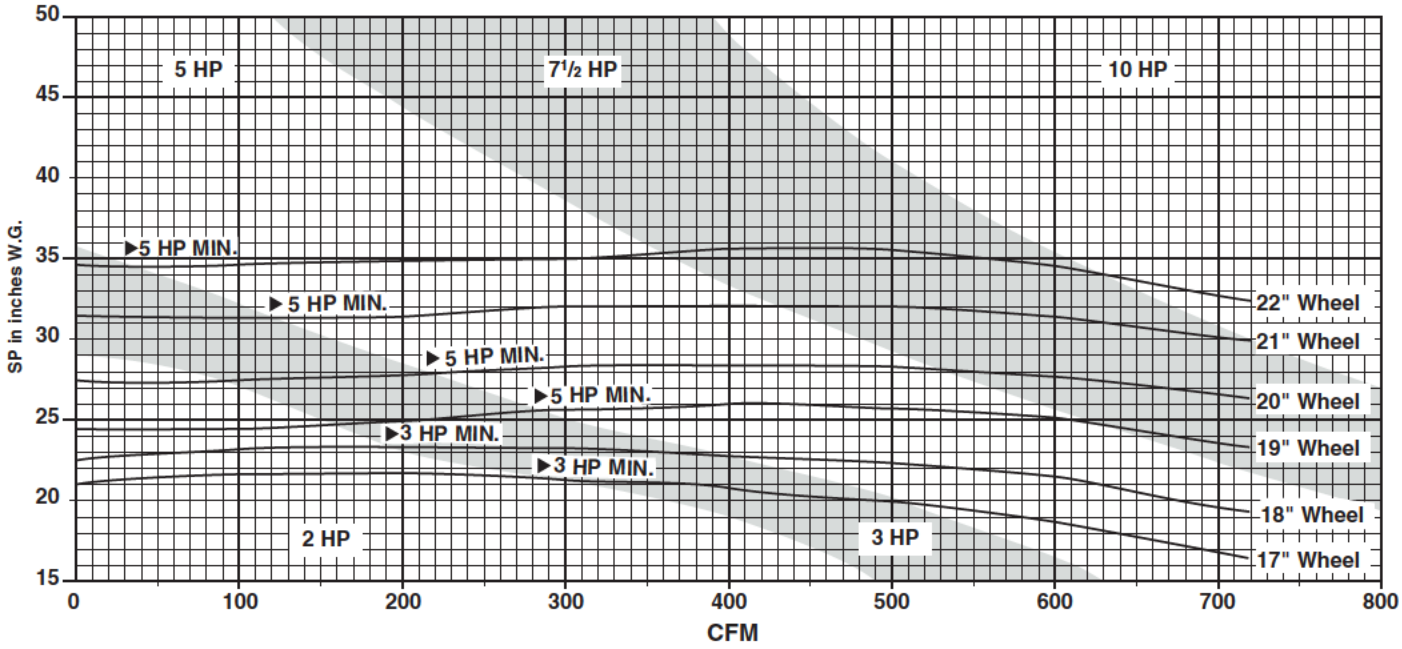

DIRECT DRIVE RATINGS @ 3500 RPM

CFM and BHP at Static Pressure Shown • Ratings at 70°F., .075 Density, Sea Level

Model HP-6B

BHP values are shown. Note "▶" is minimum HP motor needed for required starting torque (WR^2) for steel wheels. See page 14.

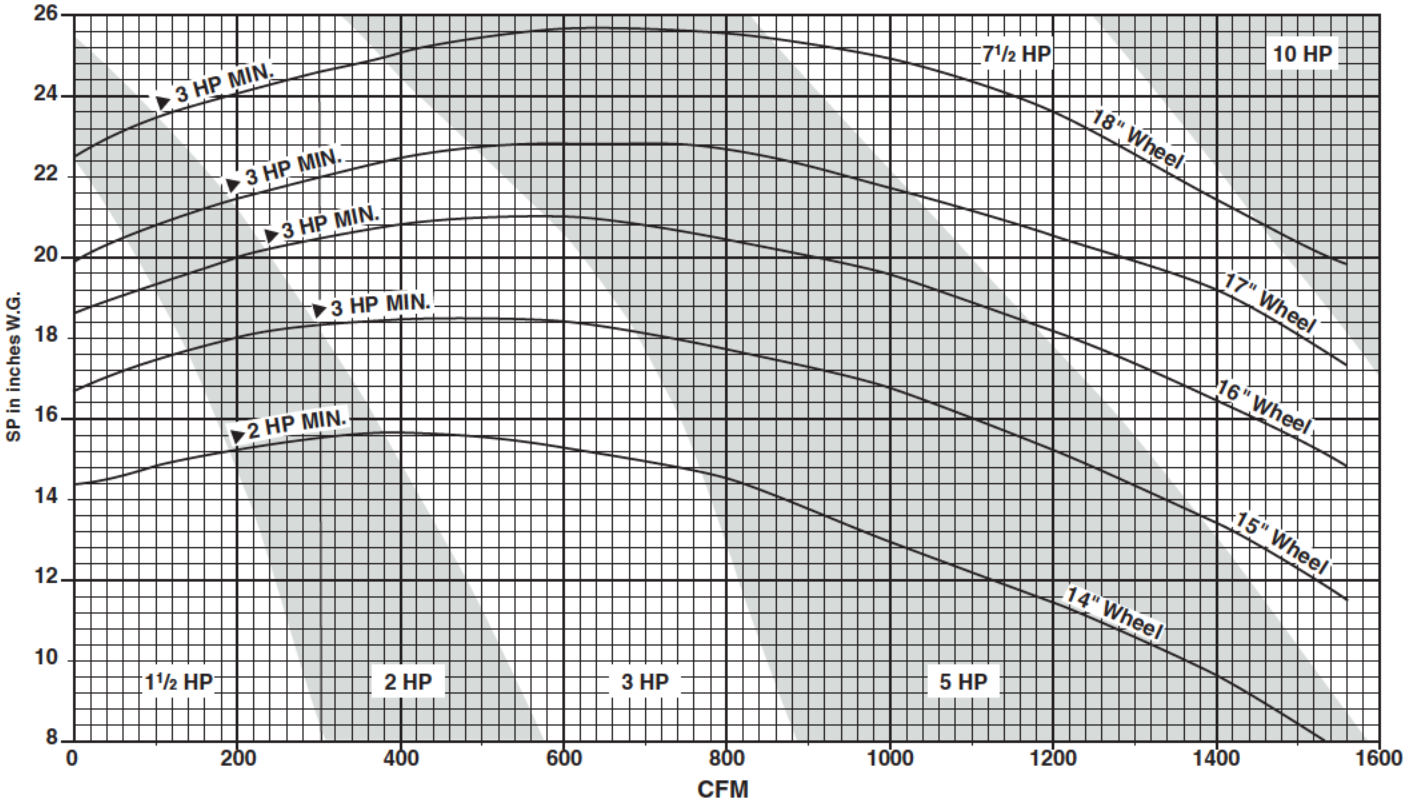

Model HP-6C

BHP values are shown. Note "▶" is minimum HP motor needed for required starting torque (WR^2) for steel wheels. See page 14.

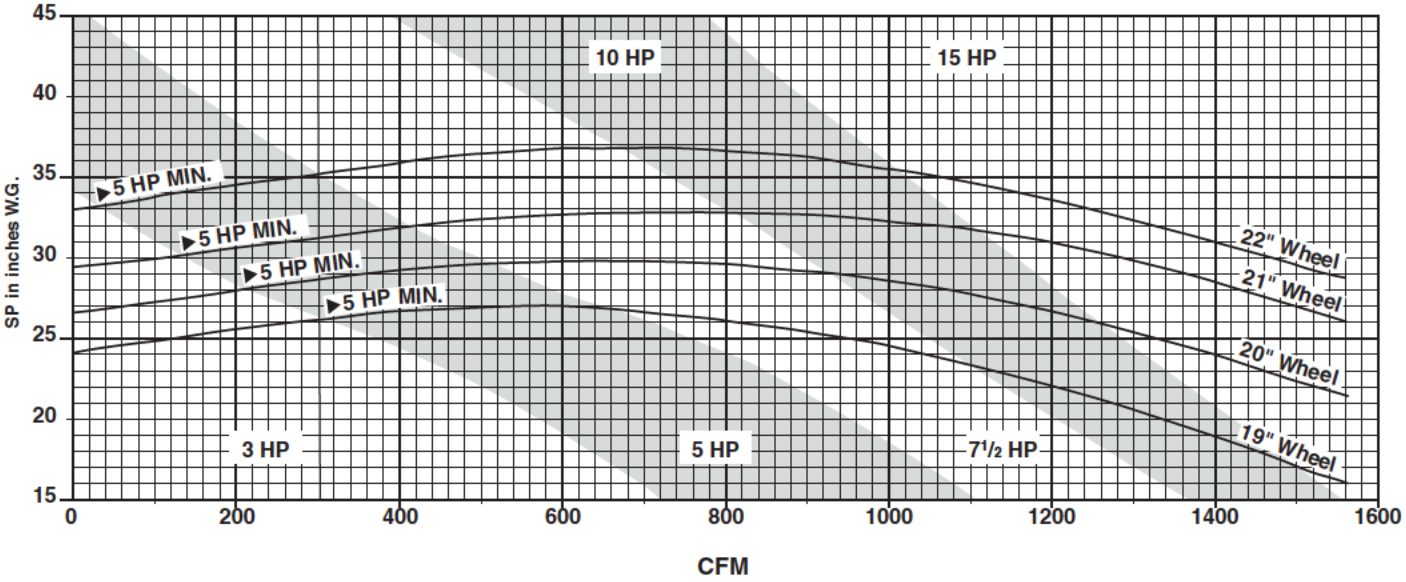

DIRECT DRIVE RATINGS @ 3500 RPM

CFM and BHP at Static Pressure Shown • Ratings at 70°F., .075 Density, Sea Level

Model HP-6E

BHP values are shown. Note "▶" is minimum HP motor needed for required starting torque (WR^2) for steel wheels. See page 14.

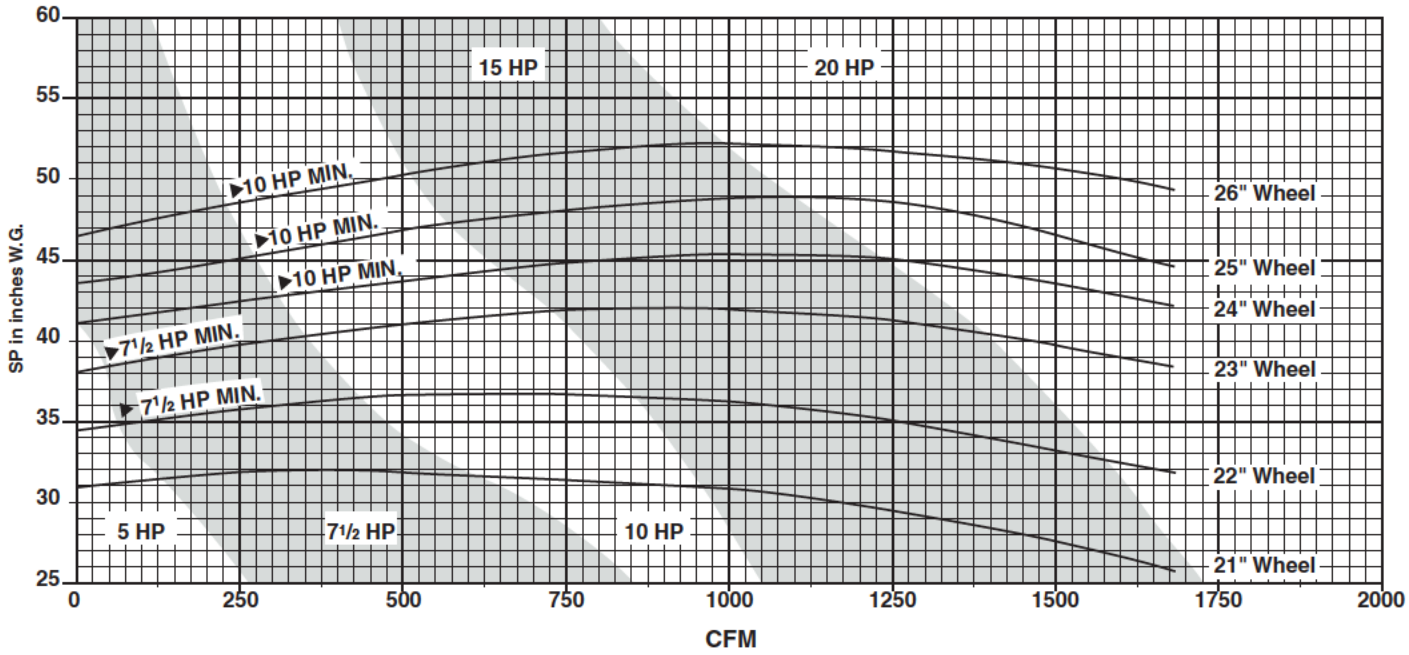

Model HP-8B

BHP values are shown. Note "▶" is minimum HP motor needed for required starting torque (WR^2) for steel wheels. See page 14.

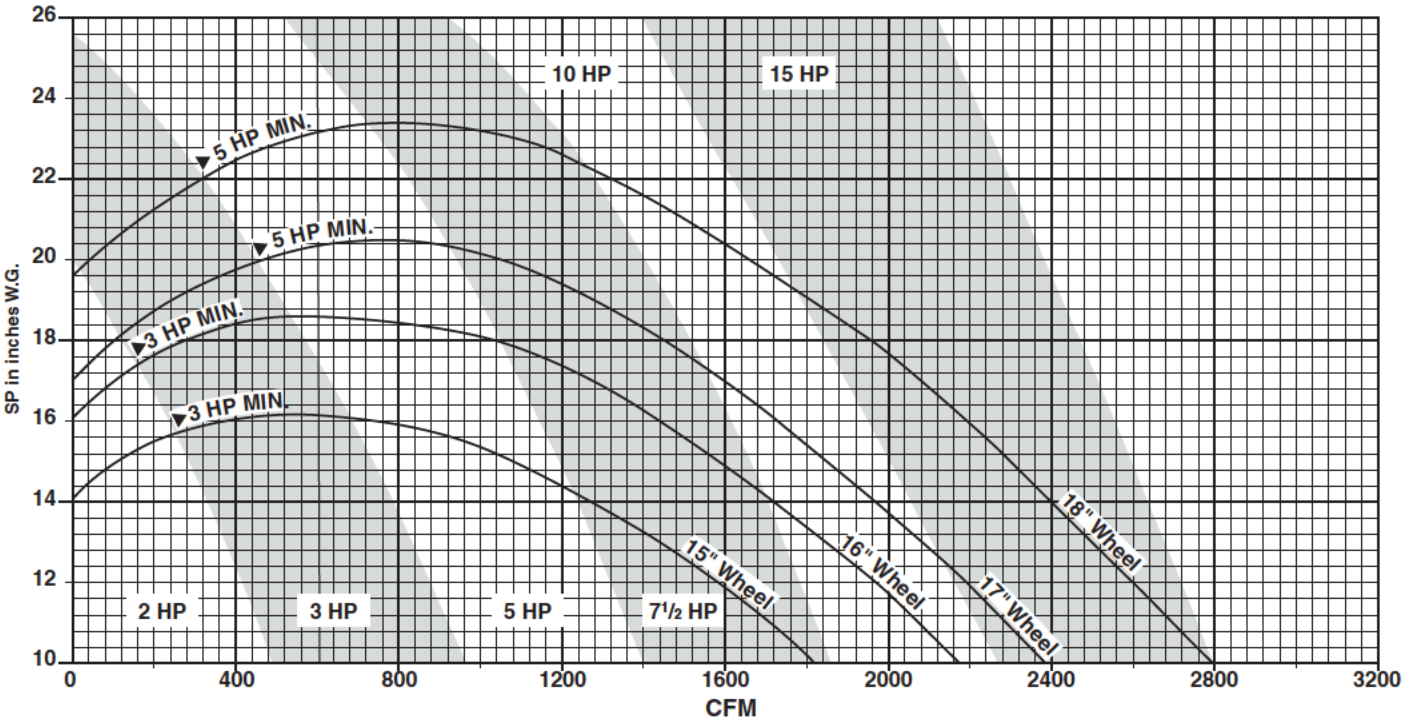

DIRECT DRIVE RATINGS @ 3500 RPM

CFM and BHP at Static Pressure Shown • Ratings at 70°F., .075 Density, Sea Level

Model HP-8D

BHP values are shown. Note "▶" is minimum HP motor needed for required starting torque (WR^2) for steel wheels. See page 14.

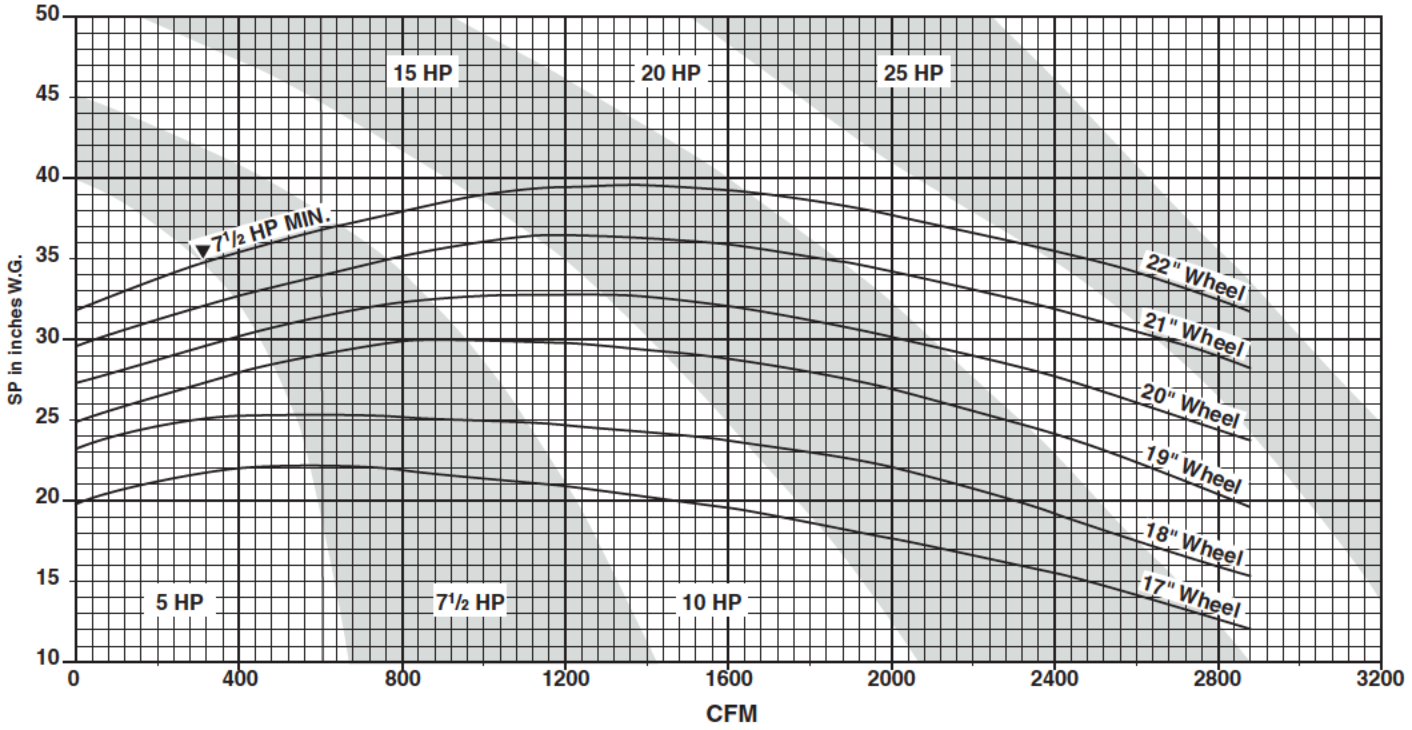

Model HP-8E

BHP values are shown. Note "▶" is minimum HP motor needed for required starting torque (WR^2) for steel wheels. See page 14.

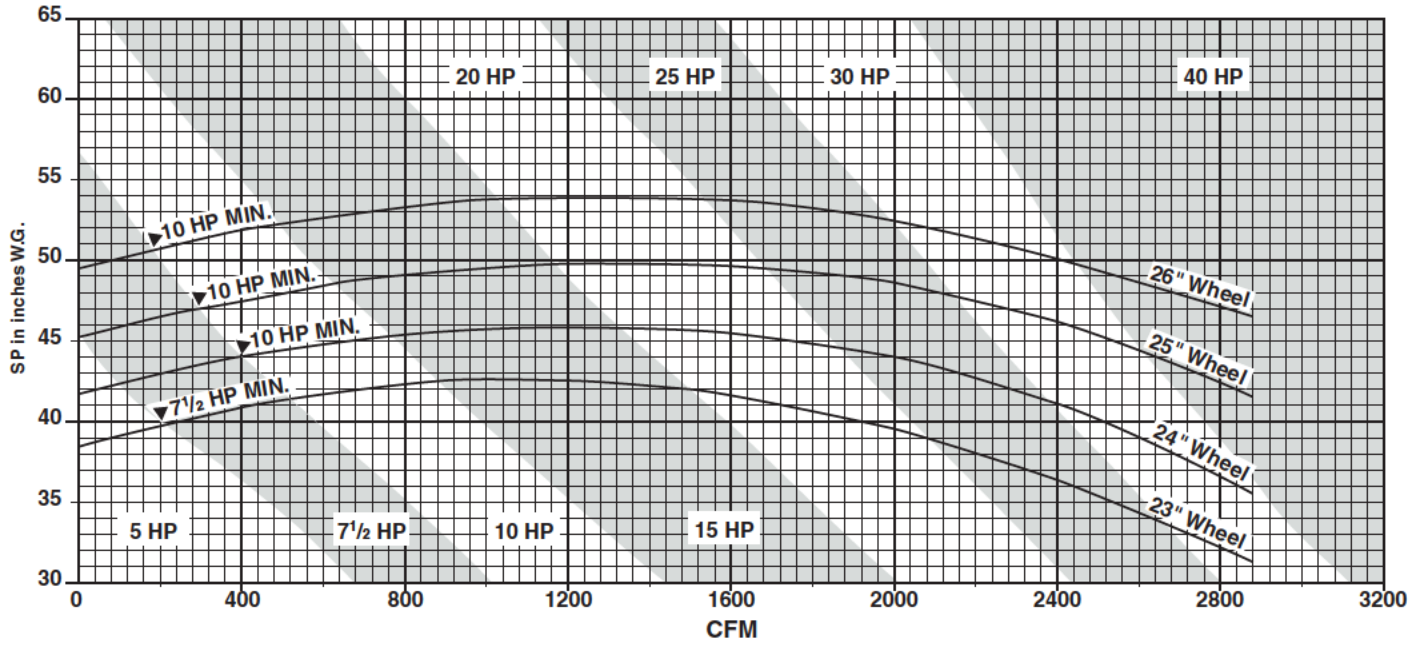

DIRECT DRIVE RATINGS @ 3550 RPM

CFM and BHP at Static Pressure Shown • Ratings at 70°F., .075 Density, Sea Level

Model HP-10D

BHP values are shown. Note "▶" is minimum HP motor needed for required starting torque (WR^2) for steel wheels. See page 14.

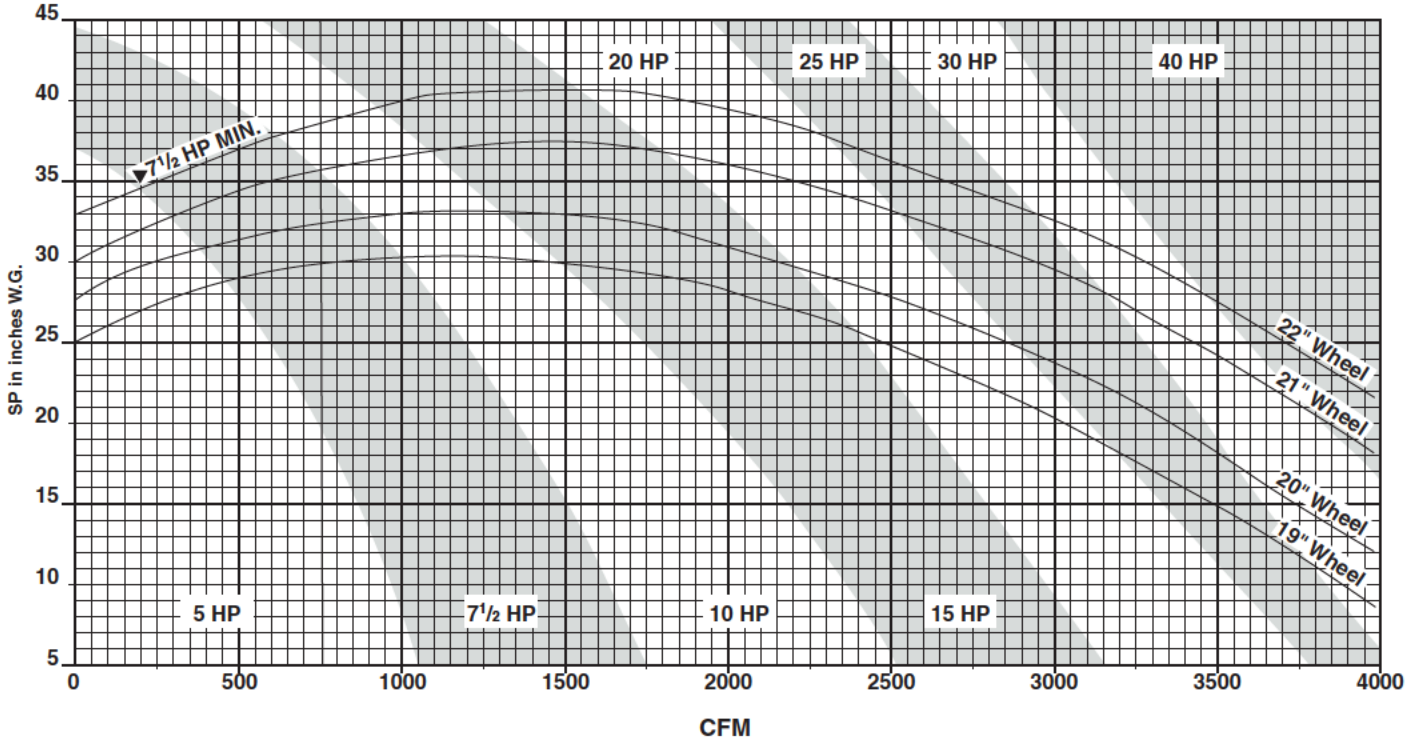

Model HP-10F

BHP values are shown. Note "▶" is minimum HP motor needed for required starting torque (WR^2) for steel wheels. See page 14.

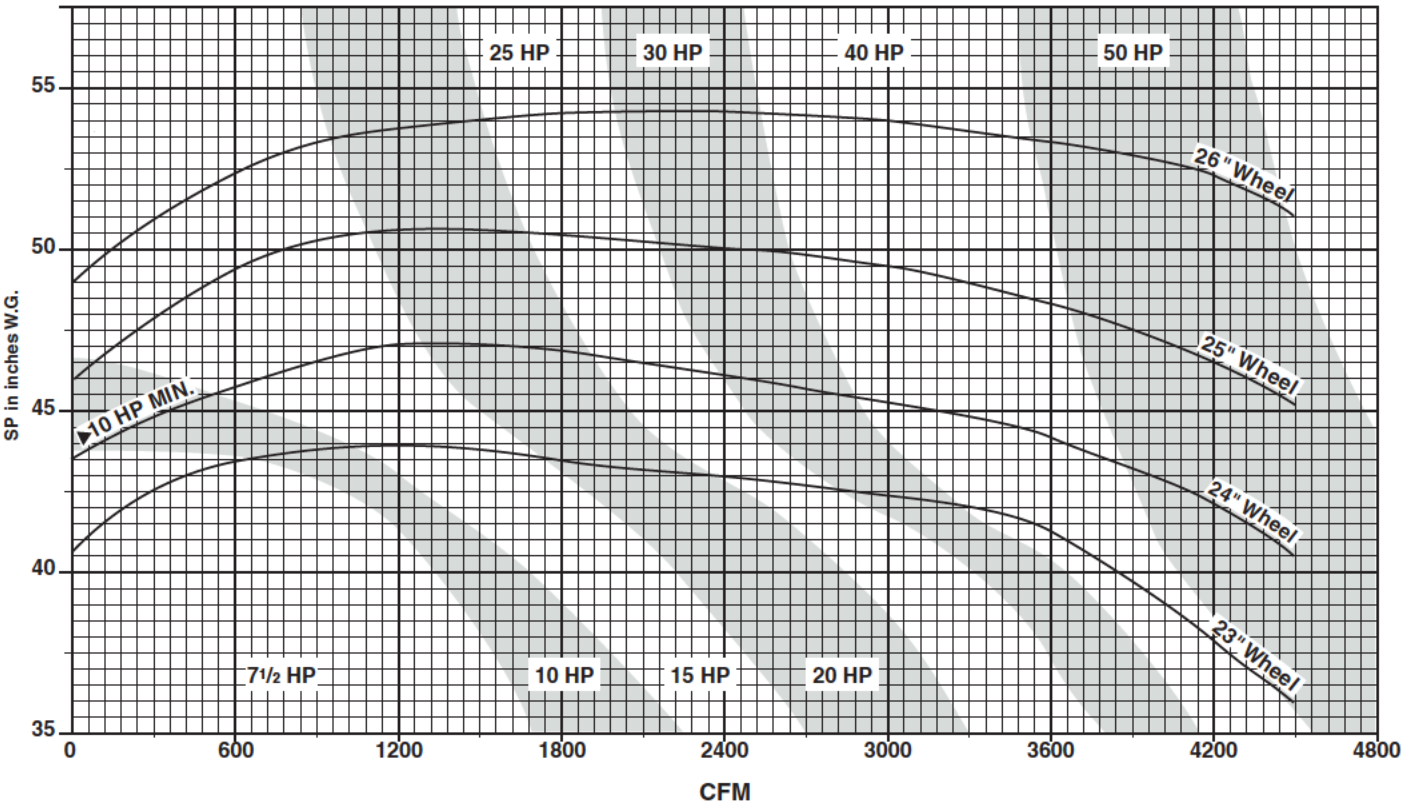

DIRECT DRIVE RATINGS @ 3550 RPM

CFM and BHP at Static Pressure Shown • Ratings at 70°F., .075 Density, Sea Level

Model HP-12F

BHP values are shown. Note "▶" is minimum HP motor needed for required starting torque (WR²) for steel wheels. See page 14.

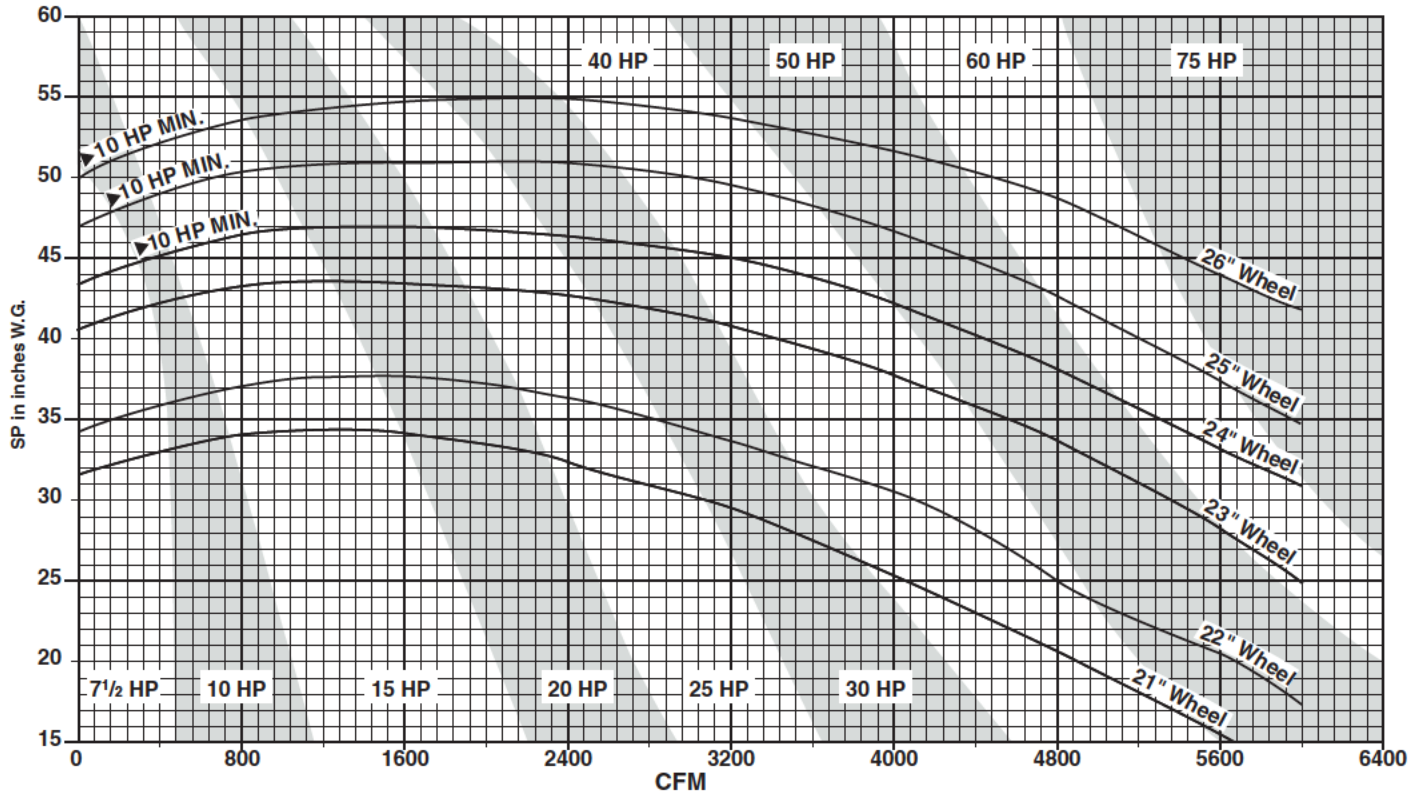

Model HP-12G

BHP values are shown. Note "▶" is minimum HP motor needed for required starting torque (WR²) for steel wheels. See page 14.

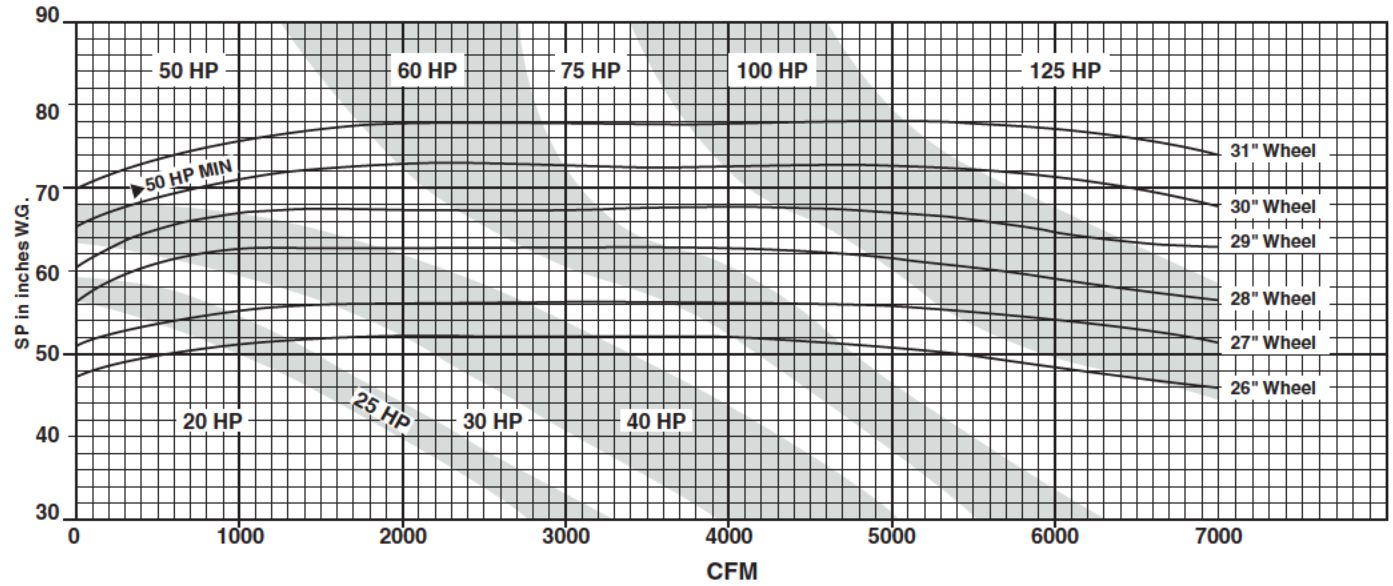

DESIGN SPECIFICATIONS

HP STEEL WHEEL WR² VALUES AND MINIMUM MOTOR HORSEPOWER

Model	WR²(lb.-FT.²)	Min. HP*
HP-4A14	3.4	1 1/2
HP-4A15	4.4	1 1/2
HP-4A16	5.7	1 1/2
HP-4A17	7.2	3
HP-4A18	9.0	3
HP-4C17	7.2	3
HP-4C18	9.0	3
HP-4C19	11.0	5
HP-4C20	13.5	5
HP-4C21	16.2	5
HP-4C22	19.4	5
HP-6B14	3.5	2
HP-6B15	4.6	3
HP-6B16	6.0	3
HP-6B17	7.6	3
HP-6B18	9.6	3
HP-6C19	11.0	5
HP-6C20	13.5	5
HP-6C21	16.2	5
HP-6C22	19.4	5
HP-6E21	19.1	5
HP-6E22	22.2	7 1/2
HP-6E23	23.8	7 1/2
HP-6E24	28.1	10
HP-6E25	32.9	10
HP-6E26	38.3	10
HP-8B15	4.6	3
HP-8B16	6.0	3
HP-8B17	7.6	5
HP-8B18	9.6	5

Model	WR²(lb.-FT.²)	Min. HP*
HP-8D17	7.6	5
HP-8D18	9.6	5
HP-8D19	11.9	5
HP-8D20	14.5	5
HP-8D21	17.6	5
HP-8D22	21.0	7 1/2
HP-8E23	23.8	7 1/2
HP-8E24	28.0	10
HP-8E25	32.9	10
HP-8E26	38.3	10
HP-10D19	11.9	5
HP-10D20	14.5	5
HP-10D21	17.6	5
HP-10D22	21.1	7 1/2
HP-10F23	26.7	7 1/2
HP-10F24	31.5	10
HP-10F25	36.8	10
HP-10F26	42.7	15
HP-12F21	19.0	5
HP-12F22	23.0	7 1/2
HP-12F23	26.7	7 1/2
HP-12F24	31.5	10
HP-12F25	36.8	10
HP-12F26	42.7	15
HP-12G26	72.0	20
HP-12G27	83.0	20
HP-12G28	95.0	20
HP-12G29	108.0	25
HP-12G30	123.0	50
HP-12G31	138.0	50

***Min. HP:** This is the suggested minimum motor horsepower for Arrangement 4 fans with a nominal 3500 RPM motor speed. In a few situations motors suitable for the fan *operating point* BHP may not have sufficient torque to start the fan as *quickly* as desired. Therefore, use a motor horsepower at least as large as those listed in the tables to the left. The suggested motor horsepower values are based on typical Baldor three phase motors. Motor starting torques from other vendors will vary. These tables do not apply to Arrangement 4 fans with 1750 RPM and 2850 RPM motors, and any belt driven fans. A smaller horsepower motor may be acceptable for some of these applications.

DIMENSIONS and SPECIFICATIONS

NOTE: The table below contains blower housing dimensions common to all arrangements on pages 15, 17 and 18.

DIMENSIONS IN INCHES ± 1/8" DIMENSIONS SUBJECT TO CHANGE WITHOUT NOTICE.

MODEL*	D	M	O	P	R	S	AA	DD①
HP-4A	4	11 3/4	18	13 9/16	14 3/8	12 3/4	6	4
HP-4C	4	14 13/16	17 7/8	16 7/16	17 7/16	15 7/16	6	4
HP-6B	6 3/8	11 3/4	18	13 9/16	14 3/8	12 3/4	8	6
HP-6C	4	14 13/16	17 7/8	16 7/16	17 7/16	15 7/16	6	6
HP-6E	5 3/8	17 7/16	19 1/8	19 3/8	20 9/16	18 3/16	8	6
HP-8B	6 3/8	11 3/4	19 13/16	13 9/16	14 3/8	12 3/4	8	8
HP-8D	6 3/8	14 13/16	19 3/4	16 7/16	17 7/16	15 7/16	8	8
HP-8E	5 3/8	17 7/16	21	19 3/8	20 9/16	18 3/16	8	8
HP-10D	6 3/8	14 13/16	21 3/4	16 7/16	17 7/16	15 7/16	8	10
HP-10F	7 3/8	17 7/16	23	19 3/8	20 9/16	18 3/16	10	10
HP-12F	7 3/8	17 7/16	23	19 3/8	20 9/16	18 3/16	10	12
HP-12G	9	20 3/4	24 15/16	23 1/16	24 7/16	21 5/8	14	12

*COMPLETE MODEL NUMBER INCLUDES WHEEL DIAMETER.

① Discharge flange not available with downblast discharge on models HP-8B, HP-10D, HP-12F and HP-12G.

DIMENSIONS and SPECIFICATIONS

Arrangement #4, Direct Drive

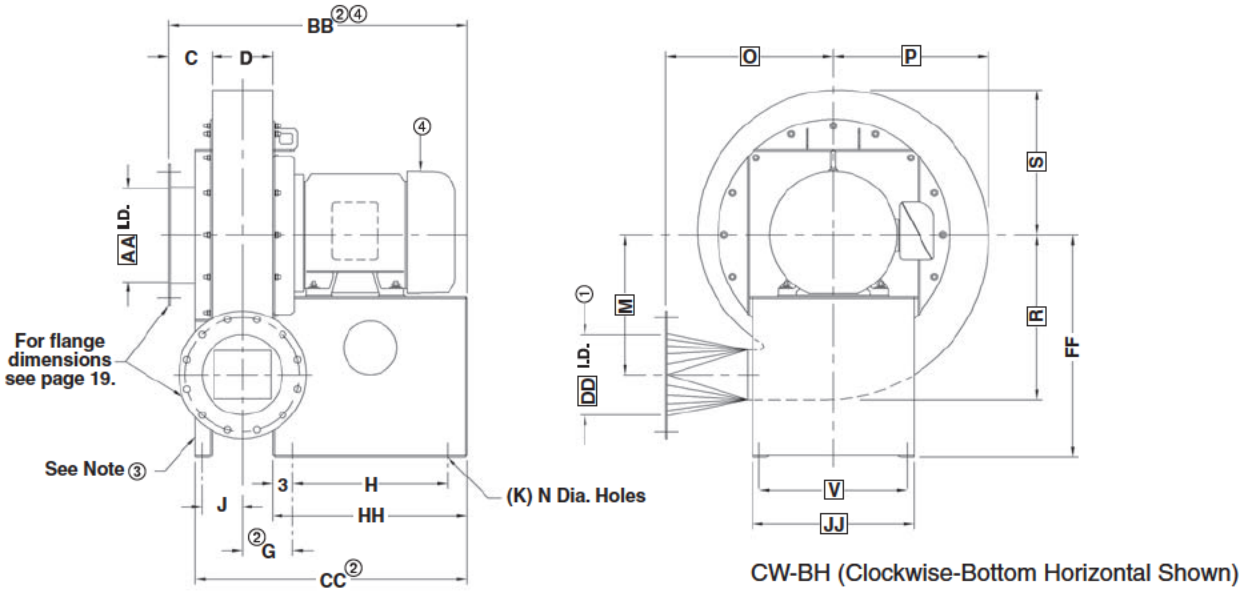

CW-BH (Clockwise-Bottom Horizontal Shown)

Note: For common boxed blower housing dimensions, see bottom of Page 14.

DIMENSIONS IN INCHES ± 1/8" DIMENSIONS SUBJECT TO CHANGE WITHOUT NOTICE.

MODEL*	MOTOR FRAME	C	② G	H	③ J	K	N	V	②④ BB	②④ CC	FF	HH	JJ
HP-4A	143T-184T	4 1/2	5	6 3/4	—	9/16	4	14 3/4	21 1/4	—	21	12 3/4	16 3/4
HP-4C	143T-215T	4 1/2	5	9	—	9/16	4	17	23 1/2	—	25	15	19
	254T-256T			14					28 1/2			20	
HP-6B	143T-184T	4 1/2	6 3/16	6 3/4	—	9/16	4	14 3/4	23 5/8	—	21	12 3/4	16 3/4
	213T-215T			12 1/2					29 5/8			18 1/2	
HP-6C	143T-215T	4 1/2	5	9	—	9/16	4	17	23 1/2	—	25	15	19
	254T-256T			14					28 1/2			20	
HP-6E	184T-256T	4 1/2	5 11/16	13	—	9/16	4	19	28 7/8	—	29	19	21
HP-8B	143T- 184T	4 1/2	6 3/16	6 3/4	—	9/16	4	14 3/4	23 5/8	—	21	12 3/4	16 3/4
	213T-256T			12 1/2					29 3/8			18 1/2	
HP-8D	182T-215T	4 1/2	6 3/16	9	—	9/16	4	17	25 7/8	—	25	15	19
	254T-286TS			14					30 7/8			20	
HP-8E	184T-256T	4 1/2	5 11/16	13	—	9/16	4	19	28 7/8	—	29	19	21
	284TS-286TS			15 1/2					31 3/8			21 1/2	
HP-10D	184T-215T	4 1/2	6 3/16	9	—	9/16	4	17	25 7/8	—	25	15	19
	254T-286TS			14					30 7/8			20	
HP-10F	215T-256T	4 1/2	6 11/16	13	—	9/16	4	19	30 7/8	—	29	19	21
	284TS-326TS			15 1/2					33 3/8			21 1/2	
	364TS-365TS			22					39 7/8			28	
HP-12F	184T-256T	4 1/2	6 11/16	13	—	9/16	4	19	30 7/8	—	29	19	21
	284TS-326TS			15 1/2					33 3/8			21 1/2	
	364TS-365TS			22					39 7/8			28	
HP-12G	254T-256T	6 1/2	7 1/2	13	6	3/4	6	22	34 1/2	30 1/2	33	19	24
	284T-326T			21					42 1/2	38 1/2		27	
	364T-365T			23					44 1/2	40 1/2		29	
	404T-405T			26					47 1/2	43 1/2		32	
	444TS			30					51 1/2	47 1/2		36	

* COMPLETE MODEL NUMBER INCLUDES WHEEL DIAMETER. Fan housings are reversible and rotatable in 45° increments.

① Discharge flange not available with Downblast (DB) discharge position on models HP-8B, HP-10D, HP-12F and HP-12G.

② For AMCA Type "C" spark resistant construction, add 1/8 inch to dimensions "G", "BB" and "CC".

③ Inlet side support plate is only included on model HP-12G.

④ On some models, motor may extend past end of motor base.

DIMENSIONS and SPECIFICATIONS

Arrangement #4HM, Direct Connected

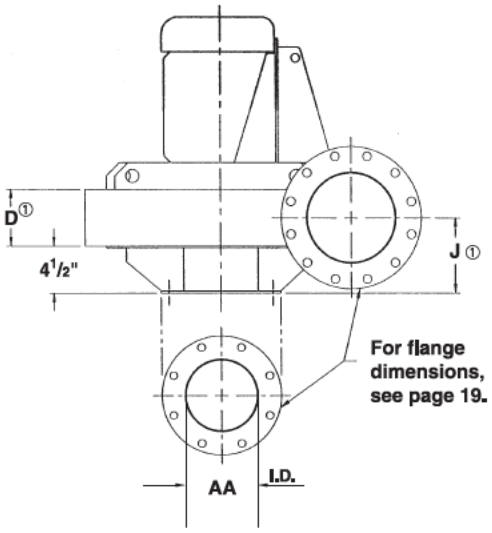

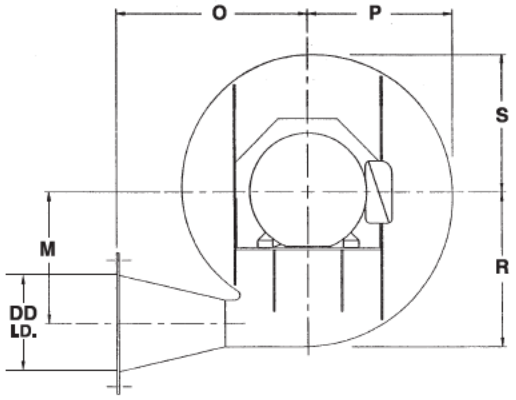

CW-BH (Clockwise-Bottom Horizontal Shown)

DIMENSIONS IN INCHES ± 1/8"

DIMENSIONS SUBJECT TO CHANGE WITHOUT NOTICE.

MODEL*	MOTOR FRAME	① D	① J	M	O	P	R	S	AA	DD
HP-4A	143T-184T	4	6 1/2	11 3/4	18	13 9/16	14 3/8	12 3/4	6	4
HP-4C	143T-256T	4	6 1/2	14 13/16	17 15/16	16 7/16	17 7/16	15 7/16	6	4
HP-6B	143T-215T	6 3/8	7 11/16	11 3/4	18	13 9/16	14 3/8	12 3/4	8	6
HP-6C	143-256T	4	6 1/2	14 13/16	17 15/16	16 7/16	17 7/16	15 7/16	6	6
HP-6E	184T-256T	5 3/8	7 3/16	17 7/16	19 3/16	19 3/8	20 9/16	18 3/16	8	6
HP-8B	143T-254T	6 3/8	7 11/16	11 3/4	19 13/16	13 9/16	14 3/8	12 3/4	8	8
HP-8D	182T-286TS	6 3/8	7 11/16	14 13/16	19 3/4	16 7/16	17 7/16	15 7/16	8	8
HP-8E	213T-286TS	5 3/8	7 3/16	17 7/16	21	19 3/8	20 9/16	18 3/16	8	8
HP-10D	184T-286TS	6 3/8	7 11/16	14 13/16	21 3/4	16 7/16	17 7/16	15 7/16	8	10
HP-10F	215T-326TS	7 3/8	8 3/16	17 7/16	23	19 3/8	20 9/16	18 3/16	10	10
HP-12F	184T-326TS	7 3/8	8 3/16	17 7/16	23	19 3/8	20 9/16	18 3/16	10	12

*COMPLETE MODEL NUMBER INCLUDES WHEEL DIAMETER.

① For AMCA "C", add: 1/8 inch to dimension "J" and 1/4 inch to dimension "D".

FAN HOUSINGS ARE REVERSIBLE AND ROTATABLE IN 45° INCREMENTS.

CONSTRUCTION GAUGES

MODEL	Inlet			Outlet Flange	Housing			Wheel			All Bases
	Side Plate	Inlet Collar	Inlet Flange		Side Plates	Scroll	Transition	Back Plate	Shroud	Blades	
HP-4A & HP-4C	7	10	10	10	7	10	14	7	7	10	7
HP-6B & HP-6E	7	10	7	10	7	10	14	7	7	10	7
HP-6C	7	10	10	10	7	10	14	7	7	10	7
HP-6E	7	10	7	10	7	10	14	7	7	10	7
HP-8B through HP-12F	7	10	7	10	7	10	14	7	7	10	7
HP-12G	1/4"	10	7	7	1/4"	10	14	1/4"	1/4"	10	7

DIMENSIONS and SPECIFICATIONS

Arrangement #1 and #9, Belt Drive (specify 9R or 9L)

For channel base dimensions, see page 18.

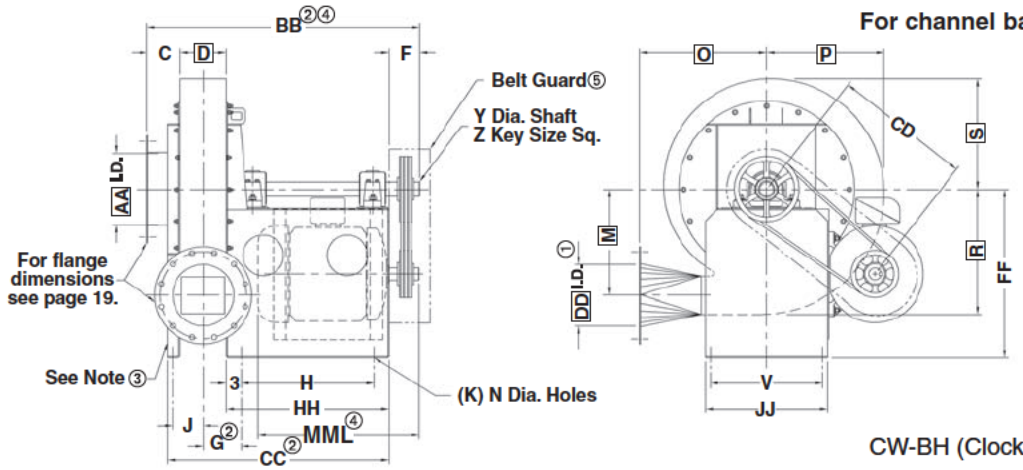

Unit shown is Arrangement 9R (motor on right side.) For motor on left side, specify Arrangement 9L.

CW-BH (Clockwise-Bottom Horizontal Shown)

Note: For common boxed blower housing dimensions, see bottom of Page 14.

DIMENSIONS IN INCHES ± 1/8"

DIMENSIONS SUBJECT TO CHANGE WITHOUT NOTICE.

MODEL*	MOTOR FRAME	C	F	② G	H	②③ J	K	N	V	Y	Z	② BB	② CC	FF	HH	JJ	④ MML
HP-4A	143T-215T	4 1/2	4	5	12 13/16	—	4	9/16	14 3/4	1 7/16	3/8	31 5/16	—	21	18 13/16	16 3/4	21 1/2
HP-4C	143T-256T	4 1/2	5	5	17 1/16	—	4	9/16	17	1 7/16	3/8	36 9/16	—	25	23 1/16	19	26 1/4
HP-6B	143T-215T	4 1/2	4	6 3/16	12 13/16	—	4	9/16	14 3/4	1 7/16	3/8	33 11/16	—	21	18 13/16	16 3/4	21 1/2
HP-6C	143T-256T	4 1/2	5	5	17 1/16	—	4	9/16	17	1 11/16	3/8	36 9/16	—	25	23 1/16	19	26 1/4
HP-6E	184T-286T	4 1/2	5	5 11/16	21	—	4	9/16	19	1 15/16	1/2	41 7/8	—	29	27	21	30 1/4
HP-8B	143T-215T	4 1/2	4	6 3/16	12 13/16	—	4	9/16	14 3/4	1 7/16	3/8	33 11/16	—	21	18 13/16	16 3/4	21 1/2
	254T-256T		5		17 1/16					1 11/16	3/8	38 15/16			23 1/16		26 1/4
HP-8D	184T-256T	4 1/2	5	6 3/16	17 1/16	—	4	9/16	17	1 11/16	3/8	38 15/16	—	25	23 1/16	19	26 1/4
HP-8E	182T- 286T	4 1/2	5	5 11/16	21	—	4	9/16	19	1 15/16	1/2	41 7/8	—	29	27	21	30 1/4
HP-10D	184T-256T	4 1/2	5	6 3/16	17 1/16	—	4	9/16	17	1 11/16	3/8	38 15/16	—	25	23 1/16	19	26 1/4
HP-10F	215T-324T	4 1/2	6	6 11/16	21	—	4	9/16	19	2 3/16	1/2	44 7/8	—	29	27	21	30 1/4
HP-12F	215T-324T	4 1/2	6	6 11/16	21	—	4	9/16	19	2 3/16	1/2	44 7/8	—	29	27	21	30 1/4
HP-12G	213T-365T	6 1/2	6	7 1/2	26	6	6	3/4	22	2 11/16	5/8	53 1/2	43 1/2	33	32	24	32 1/8

*COMPLETE MODEL NUMBER INCLUDES WHEEL DIAMETER.

FAN HOUSINGS ARE REVERSIBLE AND ROTATABLE IN 45° INCREMENTS.

① Discharge flange not available with Downblast (DB) discharge position on models HP-8B, HP-10D, HP-12F and HP-12G.

② For "AMCA Type "C" spark resistant construction, add 1/8 inch to dimensions "G", "BB" and "CC".

③ Inlet side support plate is only included on model HP-12G.

④ "MML" is the Maximum Motor Length (for maximum motor frame size listed) on customer supplied motor. Motor manufacturers "C" dimension cannot exceed "MML" without a special base.

⑤ Belt guard is standard on Arrangement 9 blowers. Arrangement 1 blowers do not include motor, motor slide base, belt guard, sheaves or belts.

C.D. BELT CENTER DISTANCE

DIMENSIONS IN INCHES

MODEL	MOTOR FRAME SIZE													
	143T-145T		182T-184T		213T-215T		254T-256T		284T-286T		324T-326T		364T-365T	
	Min.	Max.	Min.	Max.	Min.	Max.	Min.	Max.	Min.	Max.	Min.	Max.	Min.	Max.
HP-4A & HP-6B	12 5/8	14 1/16	14 3/8	15 7/8	15 11/16	17 3/8	—	—	—	—	—	—	—	—
HP-4C & HP-6C	13 11/16	15	15 7/16	16 7/8	16 3/4	18 7/16	18 7/8	20 3/4	—	—	—	—	—	—
HP-6E & HP-8E	—	—	15	16 1/2	16 3/8	18 3/8	18	20 7/16	18 15/16	21 15/16	—	—	—	—
HP-8B	12 5/8	14 1/16	14 3/8	15 7/8	15 11/16	17 1/2	17 3/8	19 1/4	—	—	—	—	—	—
HP-8D & HP-10D	—	—	15 7/16	16 7/8	16 3/4	18 7/16	18 7/8	20 3/4	—	—	—	—	—	—
HP-10F & HP-12F	—	—	—	—	16 3/8	18 3/8	18	20 7/16	18 15/16	21 15/16	19 5/8	23 1/4	—	—
HP-12G	—	—	—	—	19 3/4	21	21 1/2	23	22 1/2	24 3/8	24 3/8	26 3/4	25 3/4	27 1/2

DIMENSIONS and SPECIFICATIONS

Arrangement #9RCB or #9LCB Channel Base, Belt Drive

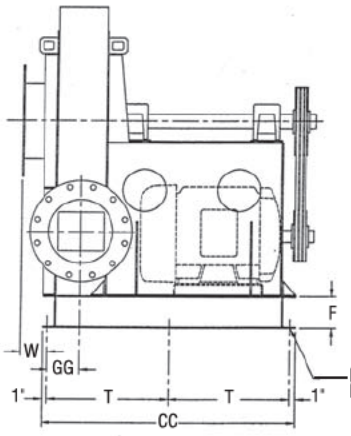

Model HP-12G

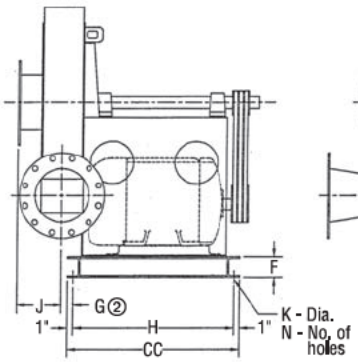

Models HP-4A thru HP-12F

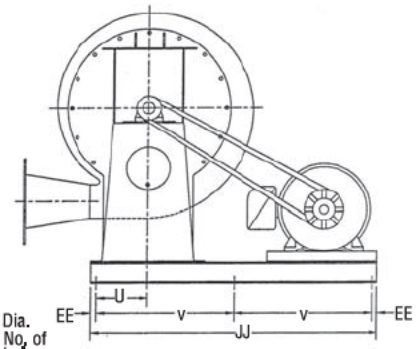

All Models
Clockwise Bottom Horizontal Discharge
and arrangement 9RCB shown.

Note: For common boxed blower housing dimensions, see bottom of Page 14.

DIMENSIONS IN INCHES ± 1/8"

DIMENSIONS SUBJECT TO CHANGE WITHOUT NOTICE.

MODEL*	MOTOR FRAME	F	② G	H	J	K	N	T	U	V	W	CC	EE	GG	JJ
HP-4A	182T - 215T	4	3	16 13/16	6 1/2	9/16	6	--	7 3/8	21 1/2	—	18 13/16	1	—	45
HP-4C	182T - 256T	4	3	21 1/16	6 1/2	9/16	6	—	8 1/2	22 1/2	—	23 1/16	1	—	47
HP-6B	182T - 215T	4	4 3/16	16 13/16	7 11/16	9/16	6	—	7 3/8	21 1/2	—	18 13/16	1	—	45
HP-6C	213T - 256T	4	3	21 1/16	6 1/2	9/16	6	—	8 1/2	22 1/2	—	23 1/16	1	—	47
HP-6E	213T - 286T	4	1 3/16	30	7 3/16	9/16	6	—	9 1/2	25 1/2	—	32	1	—	53
HP-8B	213T - 256T	4	4 3/16	21 1/16	7 11/16	9/16	6	—	7 3/8	21 1/2	—	23 1/16	1	—	45
HP-8D	213T - 286T	4	4 3/16	21 1/16	7 11/16	9/16	6	—	8 1/2	22 1/2	—	23 1/16	1	—	47
HP-8E	213T - 326T	4	1 3/16	30	7 3/16	9/16	6	—	9 1/2	25 1/2	—	32	1	—	53
HP-10D	213T - 326T	4	4 3/16	21 1/16	7 11/16	9/16	6	—	8 1/2	22 1/2	—	23 1/16	1	—	47
HP-10F	213T - 364T	4	2 3/16	30	8 3/16	9/16	6	—	9 1/2	25 1/2	—	32	1	—	53
HP-12F	213T - 364T	4	2 3/16	30	8 3/16	9/16	6	—	9 1/2	25 1/2	—	32	1	—	53
HP-12G	284T- 444T	6	—	—	—	3/4	8	22 1/2	7	28 3/16	5	47	5	6	66 3/8

② For AMCA "C", add: 1/8 inch to dimensions "G".

*COMPLETE MODEL NUMBER INCLUDES WHEEL DIAMETER.

16 DISCHARGE POSITIONS AVAILABLE. 45° DISCHARGE POSITIONS NOT SHOWN.
Discharges shown are determined by viewing fan from motor or drive side.



CW-TH
Clockwise Top Horizontal Discharge ★



CW-DB
Clockwise Down-Blast Discharge



CW-BH
Clockwise Bottom Horizontal Discharge



CW-UB
Clockwise Up-Blast Discharge



CCW-TH
Counter-Clockwise Top Horizontal Discharge



CCW-DB
Counter-Clockwise Down-Blast Discharge ★



CCW-BH
Counter-Clockwise Bottom Horizontal Discharge



CCW-UB
Counter-Clockwise Up-Blast Discharge

★ Discharge flange not available with downblast discharge on models HP-8B, HP-10D, HP-12F and HP-12G.

⚠ DANGER

All fans & blowers shown have rotating parts and pinch points. Severe personal injury can result if operated without guards. Stay away from rotating equipment unless it is disconnected or locked out from its power source.

Read operating instructions.

DIMENSIONS and SPECIFICATIONS

INLET AND DISCHARGE FLANGES

INLET FLANGE

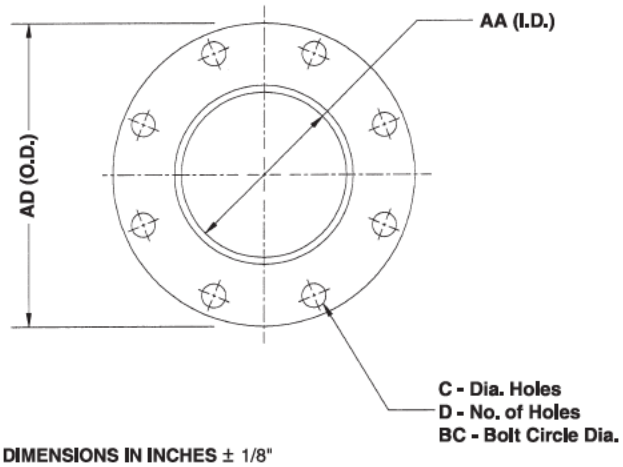

DIMENSIONS IN INCHES ± 1/8"

MODEL	AA I.D.	AD O.D.	BC B.C.	C Dia.	D
HP-4A, 4C and 6C	6	11	9 1/2	7/8	8
HP-6B, 6E, 8B, 8D, 8E and 10D	8	13 1/2	11 3/4	7/8	8
HP-10F and 12F	10	16	14 1/4	1	12
HP-12G	14	21	18 3/4	1 1/8	12

DISCHARGE FLANGE ★

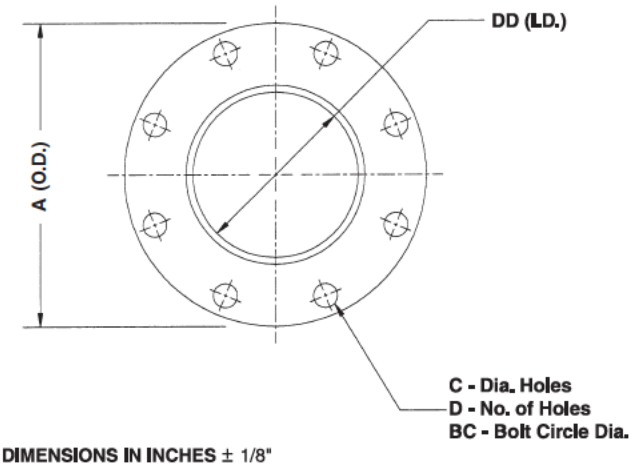

DIMENSIONS IN INCHES ± 1/8"

MODEL	DD I.D.	A O.D.	BD B.C.	C Dia.	D
HP-4A and 4C	4	9	7 1/2	3/4	8
HP-6B, 6C and 6E	6	11	9 1/2	7/8	8
HP-8B, 8D and 8E★	8	13 1/2	11 3/4	7/8	8
HP-10D and 10F★	10	16	14 1/4	1	12
HP-12F and 12G★	12	19	17	1	12

★See note under discharge positions available on page 18

All dimensions except flange thickness meet ANSI-125 lb. and ASA-150 lb. specifications. Standard orientation is holes straddling major center lines. Holes may be specified to be on center lines at no additional cost.

APPROXIMATE SHIPPING WEIGHTS LESS MOTOR

MODEL	MOTOR FRAME	Fan Arrangement			
		4	8	1 & 9	9CB
HP-4A	143T - 184T	190	265	—	—
	143T - 215T	—	—	220	—
	182T - 213T	—	—	—	315
HP-4C	143T - 215T	250	335	—	—
	254T	260	350	—	—
	143T - 256T	—	—	280	—
	182T - 254T	—	—	—	380
HP-6B	143T - 184T	210	285	—	—
	213T - 215T	240	315	—	—
	143T - 215T	—	—	270	—
	182T - 215T	—	—	—	365
HP-6C	143T - 215T	270	355	—	—
	254T	300	385	—	—
	143T - 256T	—	—	310	—
	213T - 256T	—	—	—	410
HP-6E	184T - 256T	350	445	—	—
	184T - 286T	—	—	400	—
	213T - 286T	—	—	—	510
HP-8B	143T - 184T	215	—	—	—
	213T - 254T	245	—	—	—
	143T - 215T	—	290	275	—
	254T - 256T	—	320	300	—
	213T - 256T	—	—	—	395
HP-8D	182T - 215T	280	365	—	—
	254T - 286TS	300	—	—	—
	254T - 256T	—	385	—	—
	184T - 256T	—	—	340	—
	213T - 286T	—	—	—	440

MODEL	MOTOR FRAME	Fan Arrangement			
		4	8	1 & 9	9CB
HP-8E	213T - 256T	360	455	—	—
	284T - 324T	380	—	—	—
	284TS - 326TS	—	475	—	—
	182T - 286T	—	—	430	—
	213T - 326T	—	—	—	540
HP-10D	184T - 215T	290	375	—	—
	184T - 256T	—	—	350	—
	254T - 286TS	310	395	370	—
	213T - 326T	—	—	—	470
HP-10F	215T - 256T	380	475	—	—
	284TS - 326TS	395	490	—	—
	215T - 324T	—	—	445	—
	213T - 364T	—	—	—	565
HP-12F	184T - 256T	380	—	—	—
	215T - 256T	—	475	—	—
	284TS - 364TS	400	495	—	—
	215T - 324T	—	—	465	—
	213T - 364T	—	—	—	595
HP-12G	254T - 256T	712	—	—	—
	284T - 326T	766	—	—	—
	364T - 365T	787	—	—	—
	404T - 405T	802	—	—	—
	444TS	856	—	—	—
	213T - 365T	—	—	1080	—
	284T - 444T	—	—	—	1400

Inclined Plate Clarifiers

LP & LP-Q MODELS

- Lower installed cost
- Easily installed indoors
- Minimal start-up/restart time
- Lower maintenance costs
- Occupies less floor space
- Minimal field labor required to install



The Hydro Quip Inclined Plate Clarifiers are designed and manufactured to provide for the precipitation and separation of suspended solids. Our design employs the use of a series of plates inclined at an angle of 45° or 55°. This specialized design allows the unit to perform all of the functions of a conventional solids contact clarifier at a fraction of the space and cost.

LP Model: separation of suspended solids from water
LP-Q Model: separation of suspended solids and trace amounts of oil in water

INLET COMPARTMENT

The inlet compartment receives the raw water from the process. After entering through the non-clogging inlet nozzle, the water in the LP model is dispersed evenly through the chamber.

In the LP-Q model, the water enters the quiescent zone. This area disperses the energy and evenly distributes the flow. A skimmer is provided to decant the oil to a separate tank.

SEPARATION CHAMBER

The raw water from the inlet chamber passes down under the plate pack skirt and moves upwards toward the plate pack. As the water moves upwards, the suspended particles have their upward velocity interrupted by the inclined plates. These particles drop down and slide down the inclined plate and join larger previously settled particles in the sludge hopper. Individual plates are easily installed and removed.

SLUDGE CHAMBER

The sludge chamber collects the solids as they fall. The sludge hopper is sloped at a minimum 45° angle to concentrate the sludge and avoid bridging.

CLEAN WATER CHAMBER

The clarified water exits the top of the plates and flows into the effluent trough. From this point the clarified effluent flows by gravity and exits the unit through the effluent nozzle.

PERFORMANCE

- Excellent separation of suspended solids
- Up to 1200 sq ft of projected plate surface area
- Effective separation of hard to settle solids
- Ability to produce up to 3% – 5% concentrated sludge

TECHNICAL FEATURES

- Individual removable polypropylene or stainless steel plates
- Stainless steel or coated carbon steel tanks
- Complete shop assembly
- Adjustable effluent weir
- Oil skimming connections
- Inspection hatch/ window
- Sample ports

OPTIONAL EQUIPMENT/ FEATURES

The inclined plate clarifier is available with a number of different options such as:

- Access Platform and Ladder (or Stairs)
- Cover
- Flash Mixer Chamber with Mixer
- Flocculation Tank with Slow Speed Mixer
- Instrumentation / Controls
- Chemical Feed Equipment
- Sludge Handling and Dewatering
- Concrete Tank Designs

LP MODEL

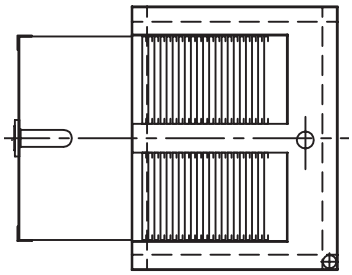

PLAN

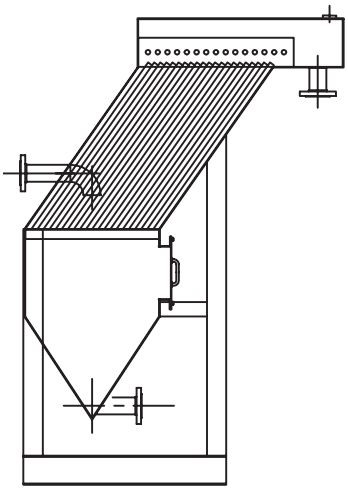

RIGHT SIDE VIEW

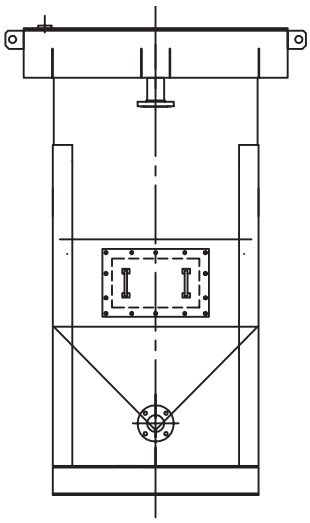

ELEVATION

SPECIFICATIONS

*Dimensions are approximate and may vary depending on your application.

** Flow rates are based on 0.25 GPM per square foot of projected plate surface area.

LP Model	Number of Plates	Length	Width	Height	Flow Rate (GPM)
HQI-CLA-20LP	11	3’-0”	2’-8”	5’-0”	5
HQI-CLA-40LP	18	3’-10”	3’-0”	5’-4”	10
HQI-CLA-60LP	18	3’-10”	4’-0”	5’-9”	15
HQI-CLA-84LP	19	5'-6"	4'-6"	7'-7"	20
HQI-CLA-125LP	21	5'-6"	4'-6"	8'-0"	32
HQI-CLA-200LP	29	6'-8"	4'-6"	9'-0"	50
HQI-CLA-266LP	29	7'-0"	5'-6"	9'-4"	65
HQI-CLA-333LP	39	7'-8"	5'-6"	9'-4"	83
HQI-CLA-400LP	44	8'-6"	5'-6"	9'-4"	100
HQI-CLA-500LP	44	8'-6"	6'-6"	9'-4"	125
HQI-CLA-600LP	42	9'-0"	6'-6"	10'-10"	150
HQI-CLA-700LP	39	8'-10"	7'-6"	12'-0"	175
HQI-CLA-800LP	45	9'-4"	7'-6"	12'-0"	200
HQI-CLA-1000LP	50	10'-8"	7'-6"	13'-0"	250
HQI-CLA-1200LP	59	11'-6"	8'-6"	13'-6"	300

LP-Q MODEL

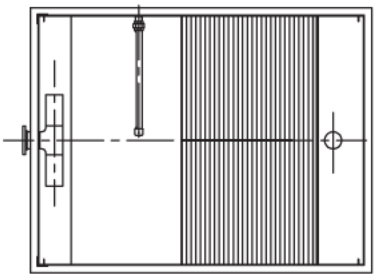

PLAN

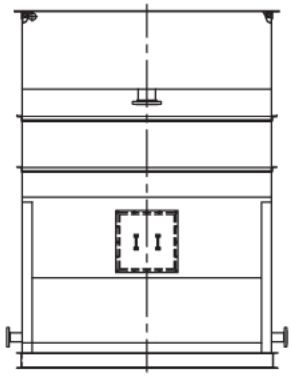

RIGHT SIDE VIEW

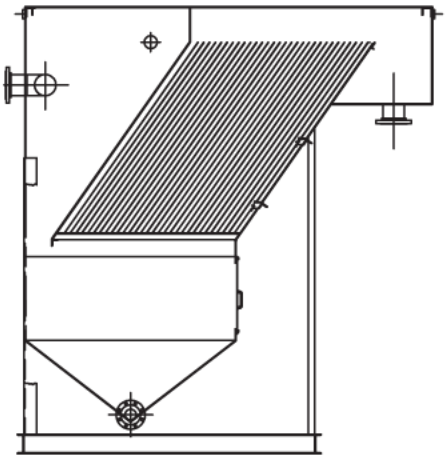

ELEVATION

SPECIFICATIONS

*Dimensions are approximate and may vary depending on your application.

** Flow rates are based on 0.25 GPM per square foot of projected plate surface area.

LP-Q Model	Number of Plates	Length	Width	Height	Flow Rate (GPM)
HQI-CLA-20LP-Q	16	5' 0"	2' 4"	6' 0"	5
HQI-CLA-40LP-Q	16	5' 0"	3' 4"	6' 0"	10
HQI-CLA-60LP-Q	16	5' 0"	3' 6"	6' 0"	15
HQI-CLA-84LP-Q	17	6' 0"	3' 6"	7' 0"	20
HQI-CLA-125LP-Q	25	7' 0"	3' 6"	7' 0"	32
HQI-CLA-200LP-Q	29	7' 0"	3' 6"	8' 0"	50
HQI-CLA-266LP-Q	29	7' 0"	4' 6"	8' 0"	65
HQI-CLA-333LP-Q	29	7' 0"	5' 6"	8' 0"	83
HQI-CLA-400LP-Q	28	7' 0"	5' 6"	10' 0"	100
HQI-CLA-500LP-Q	29	7' 0"	6' 6"	10' 0"	125
HQI-CLA-600LP-Q	29	7' 0"	6' 6"	11' 6"	150
HQI-CLA-700LP-Q	29	7' 0"	7' 6"	11' 6"	175
HQI-CLA-800LP-Q	29	7' 0"	8' 6"	11' 6"	200
HQI-CLA-1000LP-Q	32	10' 6"	8' 6"	13' 6"	250
HQI-CLA-1200LP-Q	38	12' 2"	8' 6"	13' 6"	300

HYDRO QUIP

Whether an off-the-shelf unit or customized equipment, we'll help you determine the best solution for your application and site-specific needs.

TEL: 508-399-5771
FAX: 508-399-5352
108 Pond St, Seekonk, MA 02703
hqisales@hydroquipinc.com
www.hydroquipinc.com

PRODUCT DATA

HPAF SERIES FILTERS

HPAF series filters are designed to treat liquid streams in a wide variety of adsorption applications. The modular design enables the units to easily fit into a wide variety of installations. Standard features include steel construction with epoxy internal coating, efficient internal collector array, forklift skid and lifting eyes.

A wide variety of options and contact medias are available, con-

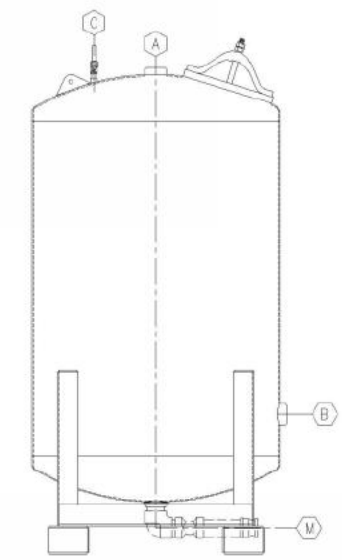

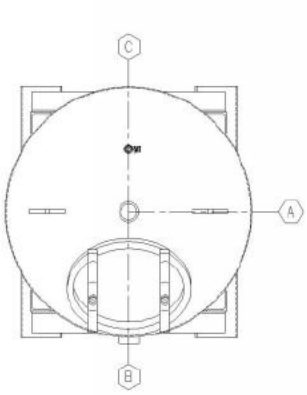

A - Process Inlet
B - Process Outlet
C - Vent
M - Carbon Discharge (Not standard on all mod-



Standard Model Shown - Detailed Submittal Drawings Available

HPAF SERIES STANDARD SPECIFICATIONS

Model Number	HPAF-500	HPAF-1000	HPAF-2000	HPAF-3000	HPAF-5000	HPAF-10,000	L10
Overall Height	5'11"	7'2"	8'6"	8'11"	9'11"	10'9"	15'10"
Diameter	30"	36"	48"	60"	72"	96"	120"
Process Connection	2" FNPT	2" FNPT	3" FNPT	3" FNPT	4" FNPT	6" FLNG	8" FLNG
Typical GAC Fill (28#/FT³)	500 Lbs	1,000 Lbs	2,000 Lbs	3,000 Lbs	5,000 Lbs	10,000 Lbs	20,000 Lbs
Shipping Weight (empty)	350 Lbs	535 Lbs	1,020 Lbs	1,525 Lbs	2,490 Lbs	3,800 Lbs	7,250 Lbs
Operational Weight	1,700 Lbs	3,300 Lbs	6,800 Lbs	10,700 Lbs	17,900 Lbs	31,200 Lbs	68,400 Lbs
Optimal Water Flows at standard conditions	8-25 GPM	10 to 35 gpm	15 to 70 gpm	25 to 120 gpm	35 to 165 gpm	60 to 300 gpm	100 to 480 gpm
Available Bed Volume	20 FT³	35 FT³	75 FT³	117 FT³	196 FT³	400 FT³	780 FT³
Maximum Pressure	75 PSIG	75 PSIG	75 PSIG	75 PSIG	75 PSIG	75 PSIG	75 PSIG
Maximum Vacuum	28" Hg	28" Hg	28" Hg	28" Hg	28" Hg	28" Hg	28" Hg

Series DS-300 Flow Sensors

Installation and Operating Instructions Flow Calculations



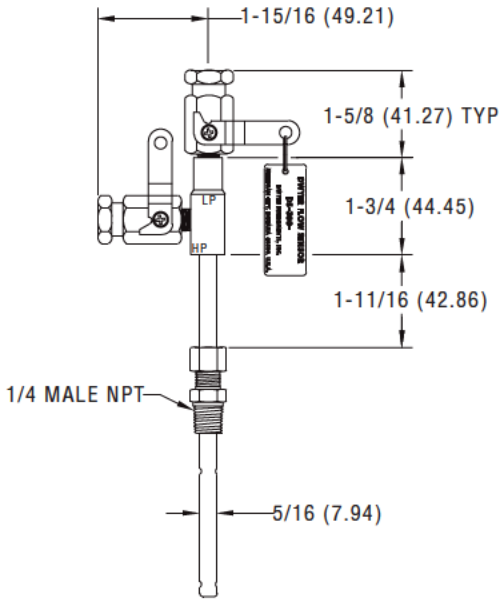

Series DS-300 Flow Sensors are averaging pitot tubes that provide accurate, convenient flow rate sensing. When purchased with a Dwyer Capsuhelic® for liquid flow or Magnehelic® for air flow, differential pressure gage of appropriate range, the result is a flow-indicating system delivered off the shelf at an economical price. Series DS-300 Flow Sensors are designed to be inserted in the pipeline through a compression fitting and are furnished with instrument shut-off valves on both pressure connections. Valves are fitted with 1/8″ female NPT connections. Accessories include adapters with 1/4″ SAE 45° flared ends compatible with hoses supplied with the Model A-471 Portable Capsuhelic® kit. Standard valves are rated at 200°F (93.3°C). Where valves are not required, they can be omitted at reduced cost. Series DS-300 Flow Sensors are available for pipe sizes from 1″ to 10″.

INSPECTION

Inspect sensor upon receipt of shipment to be certain it is as ordered and not damaged. If damaged, contact carrier.

INSTALLATION

General - The sensing ports of the flow sensor must be correctly positioned for measurement accuracy. The instrument connections on the sensor indicate correct positioning. The side connection is for total or high pressure and should be pointed upstream. The top connection is for static or low pressure.

Location - The sensor should be installed in the flowing line with as much straight run of pipe upstream as possible. A rule of thumb is to allow 10 - 15 pipe diameters upstream and 5 downstream. The table below lists recommended up and down piping.

PRESSURE AND TEMPERATURE

Maximum: 200 psig (13.78 bar) at 200°F (93.3°C).

Upstream and Downstream Dimensions in Terms of Internal Diameter of Pipe*

Upstream Condition	Minimum Diameter of Straight Pipe		
	Upstream		Downstream
	In-Plane	Out of Plane	
One Elbow or Tee	7	9	5
Two 90° Bends in Same Plane	8	12	5
Two 90° Bends in Different Plane	18	24	5
Reducers or Expanders	8	8	5
All Valves**	24	24	5

* Values shown are recommended spacing, in terms of internal diameter for normal industrial metering requirements. For laboratory or high accuracy work, add 25% to values.

** Includes gate, globe, plug and other throttling valves that are only partially opened. If valve is to be fully open, use values for pipe size change. **CONTROL VALVES SHOULD BE LOCATED AFTER THE FLOW SENSOR.**

DWYER INSTRUMENTS, INC.
P.O. BOX 373 • MICHIGAN CITY, INDIANA 46361, U.S.A.
Phone: 219/879-8000 www.dwyer-inst.com
Fax: 219/872-9057 e-mail: info@dwyer-inst.com

POSITION

Be certain there is sufficient clearance between the mounting position and other pipes, walls, structures, etc, so that the sensor can be inserted through the mounting unit once the mounting unit has been installed onto the pipe.

Flow sensors should be positioned to keep air out of the instrument connecting lines on liquid flows and condensate out of the lines on gas flows. The easiest way to assure this is to install the sensor into the pipe so that air will bleed into, or condensate will drain back to, the pipe.

For Air or Gas Flow

Install in upper quadrant of pipe

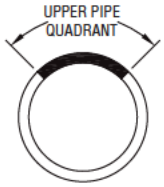

Condensate drains back to pipe

For Liquid or Steam Flow

Install in lower quadrant of pipe

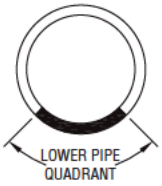

Air bleeds back to pipe

INSTALLATION

1. When using an A-160 thred-o-let, weld it to the pipe wall. If replacing a DS-200 unit, an A-161 bushing (1/4˝ x 3/8˝) will be needed.

2. Drill through center of the thred-o-let into the pipe with a drill that is slightly larger than the flow sensor diameter.

3. Install the packing gland using proper pipe sealant. If the packing gland is disassembled, note that the tapered end of the ferrule goes into the fitting body.

4. Insert sensor until it bottoms against opposite wall of the pipe, then withdraw 1/16˝ to allow for thermal expansion.

5. Tighten packing gland nut finger tight. Then tighten nut with a wrench an additional 1-1/4 turns. Be sure to hold the sensor body with a second wrench to prevent the sensor from turning.

INSTRUMENT CONNECTION

Connect the slide pressure tap to the high pressure port of the Magnehelic® (air only) or Capsuhelic® gage or transmitting instrument and the top connection to the low pressure port.

See the connection schematics below.

Bleed air from instrument piping on liquid flows. Drain any condensate from the instrument piping on air and gas flows.

Open valves to instrument to place flow meter into service. For permanent installations, a 3-valve manifold is recommended to allow the gage to be zero checked without interrupting the flow. The Dwyer A-471 Portable Test Kit includes such a device.

Water Flow

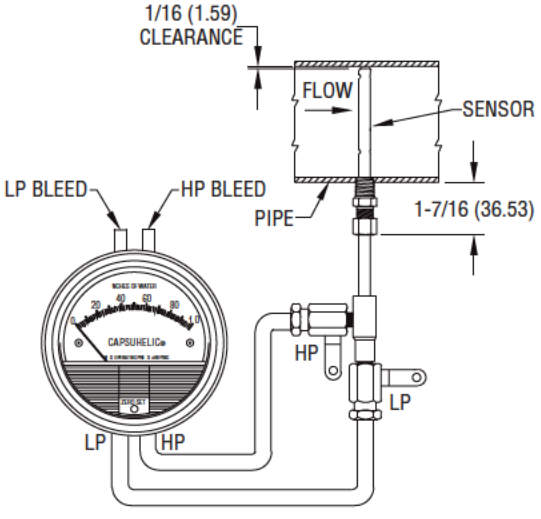

Air or Gas Flow

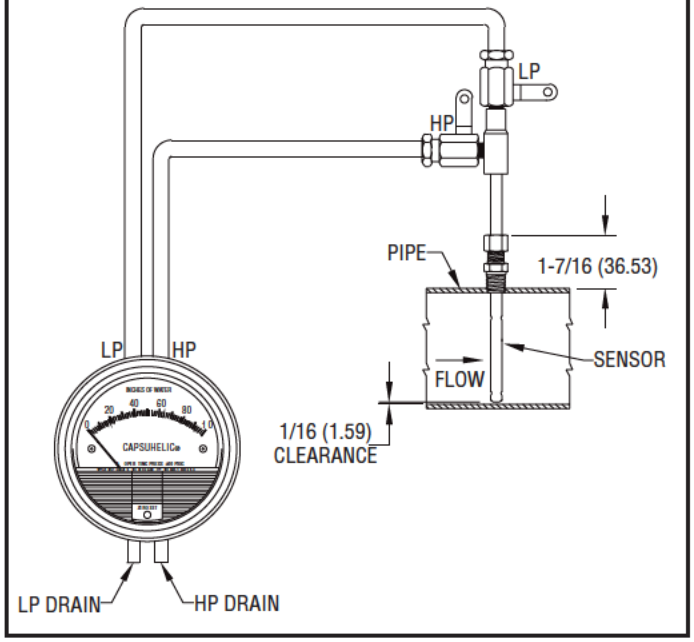

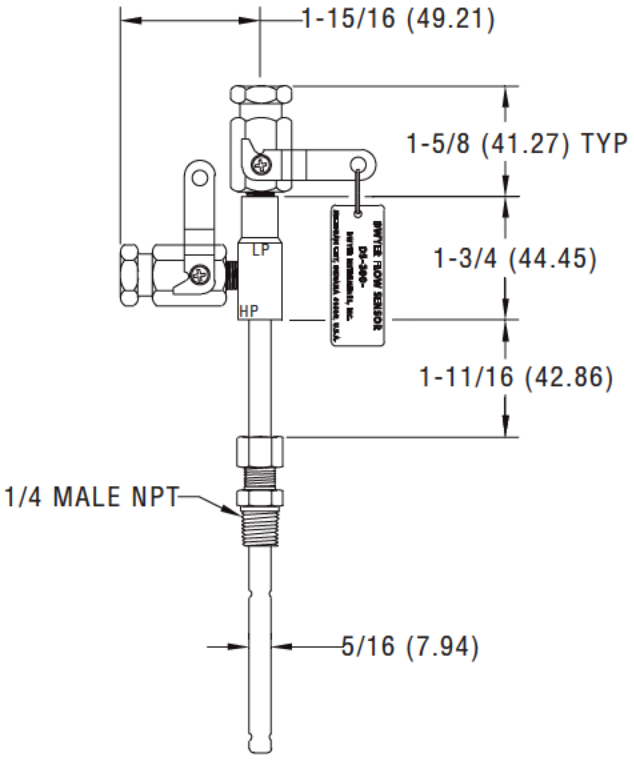

Flow Calculations and Charts

The following information contains tables and equations for determining the differential pressure developed by the DS-300 Flow Sensor for various flow rates of water, steam, air or other gases in different pipe sizes.

This information can be used to prepare conversion charts to translate the differential pressure readings being sensed into the equivalent flow rate. When direct readout of flow is required, use this information to calculate the full flow differential pressure in order to specify the exact range of Dwyer Magnehelic® or Capsuhelic® gage required. Special ranges and calculations are available for these gages at minimal extra cost. See bulletins A-30 and F-41 for additional information on Magnehelic® and Capsuhelic® gages and DS-300 flow sensors.

For additional useful information on making flow calculations, the following service is recommended: Crane Valve Co. Technical Paper No. 410 "Flow of Fluids Through Valves, Fittings and Pipe." It is available from Crane Valve Company, www.cranevalve.com.

Using the appropriate differential pressure equation from Page 4 of this bulletin,calculate the differential pressure generated by the sensor under normal operating conditions of the system. Check the chart below to determine if this value is within the recommended operating range for the sensor. Note that the data in this chart is limited to standard conditions of air at 60°F (15.6°C) and 14.7 psia static line pressure or water at 70°F (21.1°C). To determine recommended operating ranges of other gases, liquids an/or operating conditions, consult factory.

Note: the column on the right side of the chart which defines velocity ranges to avoid. Continuous operation within these ranges can result in damage to the flow sensor caused by excess vibration.

Pipe Size (Schedule 40)	Flow Coefficient "K"	Operating Ranges Air @ 60°F & 14.7 psia (D/P in. W.C.)	Operating Ranges Water @ 70°F (D/P in. W.C.)	Velocity Ranges Not Recommended (Feet per Second)
1	0.52	1.10 to 186	4.00 to 675	146 to 220
1-1/4	0.58	1.15 to 157	4.18 to 568	113 to 170
1-1/2	0.58	0.38 to 115	1.36 to 417	96 to 144
2	0.64	0.75 to 75	2.72 to 271	71 to 108
2-1/2	0.62	1.72 to 53	6.22 to 193	56 to 85
3	0.67	0.39 to 35	1.43 to 127	42 to 64
4	0.67	0.28 to 34	1.02 to 123	28 to 43
6	0.71	0.64 to 11	2.31 to 40	15 to 23
8	0.67	0.10 to 10	0.37 to 37	9.5 to 15
10	0.70	0.17 to 22	0.60 to 79	6.4 to 10

FLOW EQUATIONS

1. Any Liquid

$$Q\ (GPM) = 5.668 \times K \times D^2 \times \sqrt{\Delta P / S_f}$$

2. Steam or Any Gas

$$Q\ (lb/Hr) = 359.1 \times K \times D^2 \times \sqrt{p \times \Delta P}$$

3. Any Gas

$$Q\ (SCFM) = 128.8 \times K \times D^2 \times \sqrt{\frac{P \times \Delta P}{(T + 460) \times S_s}}$$

DIFFERENTIAL PRESSURE EQUATIONS

1. Any Liquid

$$\Delta P\ (in.\ WC) = \frac{Q^2 \times S_f}{K^2 \times D^4 \times 32.14}$$

2. Steam or Any Gas

$$\Delta P\ (in.\ WC) = \frac{Q^2}{K^2 \times D^4 \times p \times 128{,}900}$$

3. Any Gas

$$\Delta P\ (in.\ WC) = \frac{Q^2 \times S_s \times (T + 460)}{K^2 \times D^4 \times P \times 16{,}590}$$

Technical Notations

The following notations apply:

ΔP = Differential pressure expressed in inches of water column
Q = Flow expressed in GPM, SCFM, or PPH as shown in equation
K = Flow coefficient— See values tabulated on Pg. 3.
D = Inside diameter of line size expressed in inches.

For square or rectangular ducts, use: $D = \sqrt{\frac{4 \times \text{Height} \times \text{Width}}{\pi}}$

P = Static Line pressure (psia)
T = Temperature in degrees Fahrenheit (plus 460 = °Rankine)
p = Density of medium in pounds per square foot
S_f = Sp Gr at flowing conditions
S_s = Sp Gr at 60°F (15.6°C)

SCFM TO ACFM EQUATION

$$SCFM = ACFM \times \left(\frac{14.7 + PSIG}{14.7}\right) \left(\frac{520^*}{460 + °F}\right)$$

$$ACFM = SCFM \times \left(\frac{14.7}{14.7 + PSIG}\right) \left(\frac{460 + °F}{520}\right)$$

$$\text{POUNDS PER CUBIC FOOT STD.} = \text{POUNDS PER CUBIC FOOT ACT.} \times \left(\frac{14.7}{14.7 + PSIG}\right) \left(\frac{460 + °F}{520^*}\right)$$

$$\text{POUNDS PER CUBIC FOOT ACT.} = \text{POUNDS PER CUBIC FOOT STD.} \times \left(\frac{14.7 + PSIG}{14.7}\right) \left(\frac{520^*}{460 + °F}\right)$$

1 Cubic foot of air = 0.076 pounds per cubic foot at 60° F (15.6°C) and 14.7 psia.
* (520°= 460 + 60°) Std. Temp. Rankine

©Copyright 2004 Dwyer Instruments, Inc.
Printed in U.S.A. 7/04 FR# 72-440451-01 Rev. 2

DWYER INSTRUMENTS, INC.
P.O. BOX 373 • MICHIGAN CITY, INDIANA 46361, U.S.A.
Phone: 219/879-8000 www.dwyer-inst.com
Fax: 219/872-9057 e-mail: info@dwyer-inst.com

ET-DSP™ EQUIPMENT SPECIFICATIONS







ET-DSP™ Power Distribution Panel		
Electrical Performance	Amperage	3000 A Main Breaker, 4-1000A Breakers, 2–400A Breakers for PDS and Process Equipment
	Voltage	690, 600, 480, 400 vac 50 or 60hz
	Utility Panel	5kVA Step down transformer supplies control power for PDP and two weatherproof convenience outlets.
Breaker Control	Breakers are all equipped with shunt trips that can be connected to a remote pushbutton for Emergency Shutdown.	
Power Monitoring	PDP is equipped with a Modbus communication module which can send Main Breaker data to site server.	

MCMILLAN-MCMGEE CORP.
4895 35B. ST. SE. CALGARY, AB. T2B 3M9. 403.569.5100.
www.mcmillan-mcgee.com

KAESER COMPRESSORS®



Rotary Screw Compressors

SM Series

With the world-renowned SIGMA PROFILE

Flow rate 0.39 to 1.64 m³/min, Pressure 5.5 to 15 bar

www.kaeser.com

SM Series

Design is in the details



SIGMA PROFILE airend

At the heart of every SM system lies a new, premium-quality airend featuring Kaeser's energy-saving SIGMA PROFILE rotors. With optimised flow characteristics, these rotors play a key role in setting new standards in specific power performance.



SIGMA CONTROL 2

The SIGMA CONTROL 2 ensures efficient control and system monitoring. The large display and RFID reader provide effective communication and maximum security. Multiple interfaces offer exceptional flexibility, whilst the SD card slot makes updates quick and easy.



Tomorrow's technology, available today: IE4 motors

KAESER remains the only compressed air systems provider to equip compressors with Super Premium Efficiency IE4 drive motors as standard (SM 13 models), thereby delivering maximum performance and energy efficiency. SM 10 and SM 16 model compressors are equipped with Premium Efficiency IE3 motors.

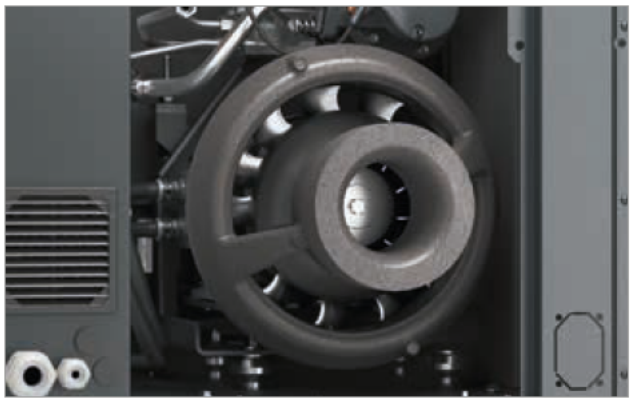

Efficient cooling

KAESER's innovative cooling system uses a highly efficient, dual-flow fan and separate airflow channels for cooling the motor, fluid / compressed air aftercooler and control cabinet. This not only achieves optimum cooling performance, low compressed air discharge temperatures and minimal operating sound levels, but also more efficient compression.

AIRCENTER

The compact and efficient complete compressed air station

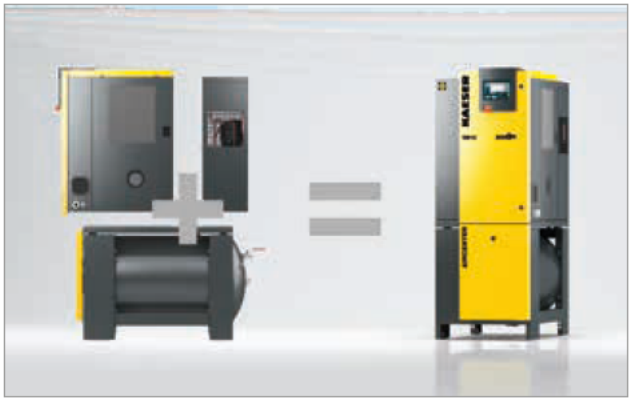

Connect and go

Simply connect the power supply and air distribution network to this compact complete compressed air station and it is ready to operate. No further installation work is necessary.



Durable air receiver

The 270-litre air receiver is specially designed for installation in AIRCENTER systems. All inner and outer surfaces are coated to provide excellent corrosion protection and to ensure long service life.



Service-friendly design

The left-hand housing cover is easily removed to allow excellent accessibility to all service points. Inspection glasses allow convenient inspection of fluid levels, condensate drain and drive belt tension whilst the unit is in operation.



KAESER FILTER for pure air

Thanks to lowest possible differential pressure, original KAESER FILTER products (optional) efficiently ensure compressed air of all purity classes as per ISO 8573-1, whilst allowing rapid and clean replacement of the filter elements. They are available in four different filter grades.

Equipment

Complete system

Ready-to-run, fully automatic, super-silenced, vibration damped, all panels powder coated. Suitable for use in ambient temperatures up to +45 °C.

Airend

Genuine KAESER single-stage airend with SIGMA PROFILE rotors and cooling fluid injection for optimised rotor cooling.

Electric motor

Super Premium Efficiency IE4 (Premium Efficiency IE3 in SM 10 / SM 16) motor, quality German manufacture, IP 55.

Fluid and air flow

“Honeycomb” structure air intake filter, pneumatic inlet and venting valves, cooling fluid separator tank with triple separation system, pressure relief valve, minimum pressure / check valve, thermostatic valve and fluid filter within the cooling fluid circuit, fluid / compressed air combination cooler.

Refrigeration dryer (with T version)

Pressure dew point measurement via PT 100 sensor and electronic level-controlled condensate drain with alarm contact as standard. Refrigerant compressor with energy-saving, cycling shutdown feature; linked to operational status of the compressor when inactive. Alternatively, continuous operation can be selected on site.

Electrical components

Ventilated IP 54 control cabinet, automatic star-delta starter, overload relay, control transformer.

SIGMA CONTROL 2

"Traffic light" LED indicators show operational status at a glance; plain text display, over 30 selectable languages, soft-touch keys with icons, fully automated monitoring and control. Selection of Dual, Quadro, Vario and Continuous control modes as standard. Interfaces: Ethernet; additional optional communications modules for: Profibus DP, Modbus, Profinet and Devicenet. SD card slot for data-logging and updates. Reader and web server.

SIGMA AIR MANAGER 4.0

The refined adaptive 3-D^{advanced} Control predictively calculates and compares the various operating options and selects the most efficient one to suit the specific needs of the application.

The SIGMA AIR MANAGER 4.0 constantly adjusts flow rates and compressor energy consumption in response to current compressed air demand. This optimisation is made possible by the integrated industrial PC with multi-core processor, in combination with the adaptive 3-D^{advanced} Control. Furthermore, the SIGMA NETWORK bus converter (SBC) provides a host of possibilities for enabling the system to be individually tailored to meet specific user requirements. The SBC can be equipped with digital and analogue input and output modules, as well as with SIGMA NETWORK ports, in order to enable seamless display of flow rate, pressure dew point, performance or alarm message information.

Amongst other key features, the SIGMA AIR MANAGER 4.0 provides long-term data storage capacity for reporting, controlling and audits, as well as for energy management tasks as per ISO 50001.

(See image on right; extract from the SIGMA AIR MANAGER 4.0 brochure)

Technical specifications

Standard versions

Model	Gauge working pressure bar	Flow rate *) complete system at gauge working pressure m³/min	Max. gauge pressure bar	Drive motor rated power kW	Dimensions W x D x H mm	Compressed air connection	Sound pressure level **) dB(A)	Mass kg
SM 10	7.5	0.94	8	5.5	630 x 790 x 1100	G 3/4	62	220
	10	0.78	11					
	13	0.60	15					
SM 13	7.5	1.32	8	7.5	630 x 790 x 1100	G 3/4	65	240
	10	1.08	11					
	13	0.85	15					
SM 16	7.5	1.62	8	9.0	630 x 790 x 1100	G 3/4	66	240
	10	1.36	11					
	13	1.09	15					

T - Versions with integrated refrigeration dryer (refrigerant R-513A)

Model	Gauge working pressure bar	Flow rate *) complete system at gauge working pressure m³/min	Max. gauge pressure bar	Drive motor rated power kW	Refrigeration dryer model	Dimensions W x D x H mm	Compressed air connection	Sound pressure level **) dB(A)	Mass kg
SM 10 T	7.5	0 94	8	5.5	ABT 15	630 x 1090 x 1100	G 3/4	62	295
	10	0.78	11						
	13	0 60	15						
SM 13 T	7.5	1 32	8	7.5	ABT 15	630 x 1090 x 1100	G 3/4	65	315
	10	1 08	11						
	13	0 85	15						
SM 16 T	7.5	1 62	8	9.0	ABT 15	630 x 1090 x 1100	G 3/4	66	315
	10	1 36	11						
	13	1 09	15						

SFC - Version with variable-speed drive

Model	Gauge working pressure bar	Flow rate *) complete system at gauge working pressure m³/min	Max. gauge pressure bar	Drive motor rated power kW	Dimensions W x D x H mm	Compressed air connection	Sound pressure level **) dB(A)	Mass kg
SM 13 SFC	7.5	0 39 - 1.40	8	7.5	630 x 790 x 1100	G 3/4	67	250
	10	0.40 - 1.19	11					
	13	0.42 - 0.95	15					

T SFC - Version with variable-speed drive and integrated refrigeration dryer

Model	Gauge working pressure bar	Flow rate *) complete system at gauge working pressure m³/min	Max. gauge pressure bar	Drive motor rated power kW	Refrigeration dryer model	Dimensions W x D x H mm	Compressed air connection	Sound pressure level **) dB(A)	Mass kg
SM 13 T SFC	7.5	0.39 - 1.40	8	7.5	ABT 15	630 x 1090 x 1100	G 3/4	67	325
	10	0.40 - 1.19	11						
	13	0.42 - 0.95	15						

AIRCENTER - Versions with refrigeration dryer and air receiver

Model	Gauge working pressure bar	Flow rate *) complete system at gauge working pressure m³/min	Max. gauge pressure bar	Drive motor rated power kW	Refrigeration dryer model	Air receiver volume l	Dimensions W x D x H mm	Compressed air connection	Sound pressure level **) dB(A)	Mass kg
	7.5	0.94	8							
AIRCENTER 10	10	0.78	11	5.5	ABT 15	270	630 x 1220 x 1720	G 3/4	62	420
	13	0.60	15							
	7.5	1.32	8							
AIRCENTER 13	10	1.08	11	7.5	ABT 15	270	630 x 1220 x 1720	G 3/4	65	440
	13	0.85	15							
	7.5	1.62	8							
AIRCENTER 16	10	1.36	11	9.0	ABT 15	270	630 x 1220 x 1720	G 3/4	66	440
	13	1.09	15							

AIRCENTER - Versions with variable-speed drive

Model	Gauge working pressure bar	Flow rate *) complete system at gauge working pressure m³/min	Max. gauge pressure bar	Drive motor rated power kW	Refrigeration dryer model	Air receiver volume l	Dimensions W x D x H mm	Compressed air connection	Sound pressure level **) dB(A)	Mass kg
	7.5	0.39 - 1.40	8							
AIRCENTER 13 SFC	10	0.40 - 1.19	11	7.5	ABT 15	270	630 x 1220 x 1720	G 3/4	62	450
	13	0.42 - 0 95	15							

*) Flow rate complete system as per ISO 1217: 2009 Annexe C/E: inlet pressure 1 bar (a), cooling and air inlet temperature +20 °C
**) Sound pressure level as per ISO 2151 and basic standard ISO 9614-2, tolerance: ± 3 dB (A)
***) Power consumption (kW) at ambient temperature +20° and 30 % relative humidity

Technical specifications for add-on refrigeration dryer

Model	Refrigeration dryer power consumption kW	Pressure dew point °C	Refrigerant	Refrigerant charge kg	Greenhouse warming potential GWP	CO_2 equivalent t	Hermetic refrigeration circuit
ABT 15	0.37	3	R-513A	0.35	631	0.22	Yes

The world is our home

As one of the world's largest manufacturers
compressors, blowers and compressed air s
KAESER KOMPRESSOREN is represented
world by a comprehensive network of branch
and authorised distribution partners in over

By offering innovative, efficient and reliable p
services, KAESER KOMPRESSOREN's exp
consultants and engineers work in close par
customers to enhance their competitive edge
progressive system concepts that continuous
boundaries of performance and technology.
decades of knowledge and expertise from th
leading systems provider are made available
every customer via the KAESER group's adv
network.

These advantages, coupled with KAESER's
service organisation, ensure that every prod
peak performance at all times, whilst providi
availability.



KAESER KOMPRESSOREN SE
P.O. Box 2143 – 96410 Coburg – GERMANY – Tel +49 9561 640-0 – Fax +49 9561 640-130
E-mail: productinfo@kaeser.com – www.kaeser.com

LGA InterCert
Certified
QM/EM System
DIN EN ISO 9001:2015/
14001:2015

P-651/24ED Specifications are subject to change without notice. .12/21

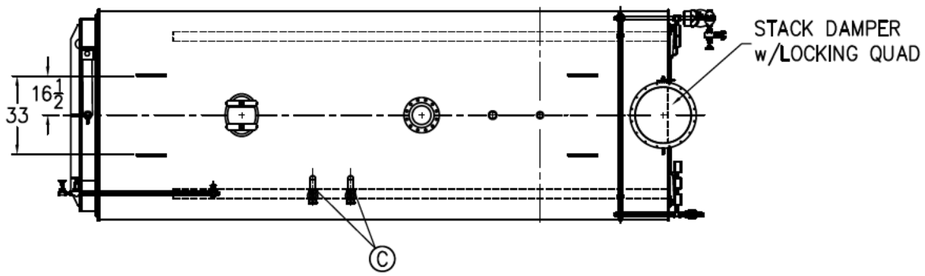

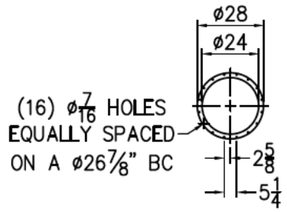

STACK FLANGE DETAIL

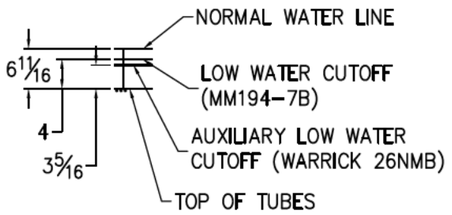

WATER LEVEL SEQUENCE

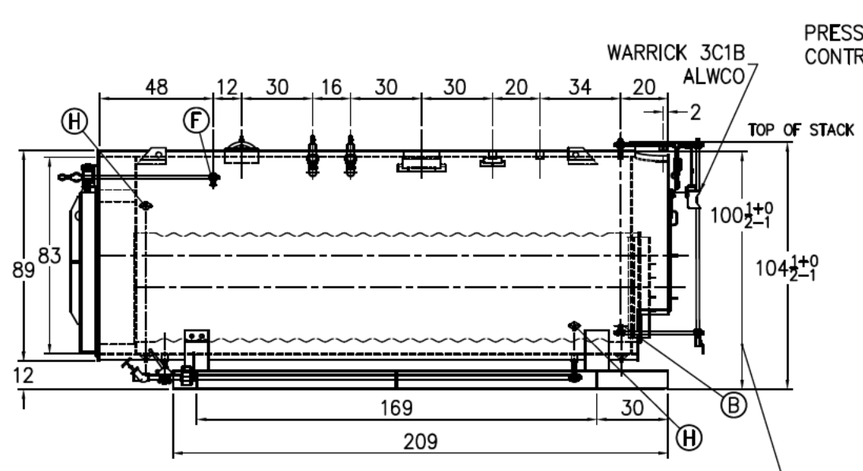

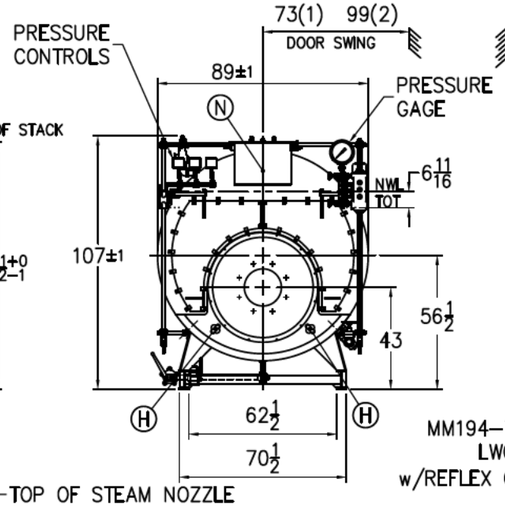

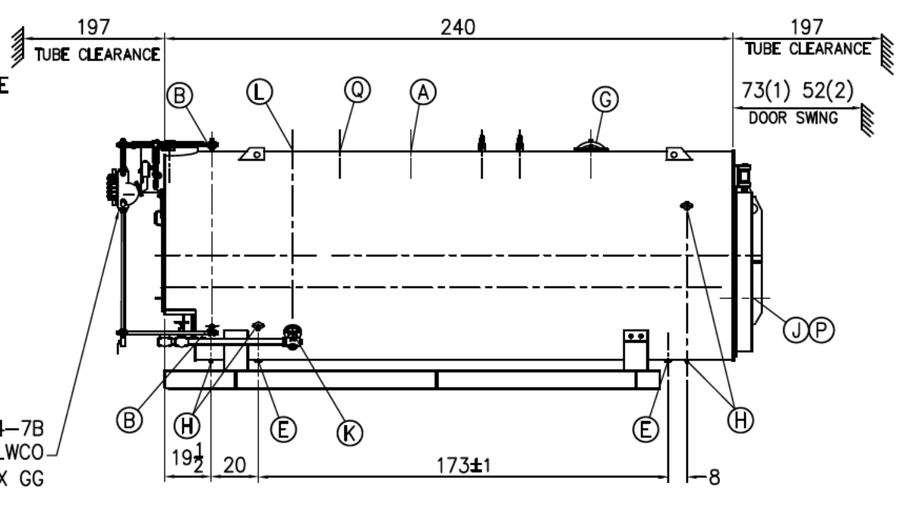

BOILER CONNECTIONS		RATINGS & CAPACITIES	
A.(1) STEAM OUTLET	8" 300# FLG	HORSEPOWER	650*
B.(3) LWCO	1" NPT	DESIGN PRESSURE	200 PSI STEAM
C.(2) SAFETY VALVE	2" NPT	GROSS OUTPUT	20,085 MBH*
D.( ) SAFETY VALVE		STEAM (FROM & AT 212°F)	20,700 LB/HR*
E.(2) BOILER BLOWDOWN	1 1/2" NPT	HEAT RELEASE: (FURNACE ONLY)	150,322 BTU/CuFt*
F.(1) SURFACE BLOWDOWN	1" NPT	RATED INPUT	25,106 MBH*
G.(1) MANWAY	12" x 16"	HEATING SURFACE (ASME)	2046 SqFt
H.(8) HANDHOLE	3" x 4"	FURNACE HEATING SURFACE	218.51 SqFt
J.(1) CLEANOUT	19" ID	FURNACE VOLUME:	
K.(1) FEEDWATER	2" 300# FLG	FURNACE ONLY	180.93 CuFt
L.(1) AUXILIARY	2" NPT	STEAMING VOLUME	77.02 CuFt
M.( ) LOW FIRE HOLD		STEAM RELEASE AREA	91.42 SqFt
N.(1) STACK TEMP	1/2" NPT	WATER CAPACITY:	
P.(1) SIGHT PORT	1" NPT	(FULL) 2,838 Gal	@ 23,608 Lbs
Q.(1) DA STEAM SUPPLY	2" NPT	(NWL) 2,262 Gal	@ 18,816 Lbs
R.( )		SHIPPING WEIGHT:	31,800 Lbs
S.( )			

LTR	DATE	REVISION	BY

NOTES

1. ALL CONTROLS MOUNTED AS PER SPECIFICATION SHEET.
2. SPECIFICATION SHEET TAKES PRIORITY OVER R & D SHEET.
3. REAR DOOR SWING: (1) MIN SIDE, MAX REAR
   (2) MAX SIDE, MIN REAR
4. BOILER DESIGN CODE ASME SECTION I LATEST EDITION.
5. BOILER INSULATED WITH 2"-8# DENSITY MINERAL FIBER INSULATION WITH 22 GAUGE STEEL JACKET.
6. ALL DIMENSIONS ARE ±1/2" UNLESS OTHERWISE NOTED.
*7. HORSEPOWER & RELATED INFO BASED ON 3.3 SqFt FIRING.

SUPERIOR BOILER

CHECKED BY	DATE
DRAWN BY: A. REUSSER	DATE: 10-20-20

BOILER

BOILER MODEL: 11-X-2000-S200-M

SCALE: 1/64

DRAWING No: 21090357

REPRESENTATIVE: KC BOILER EQUIPMENT

PROJECT: RENTAL BOILER

THIS DRAWING IS THE PROPERTY OF SUPERIOR BOILER WORKS & SHALL NOT BE REPRODUCED IN PART OR IN WHOLE, & NONE OF ITS INFORMATION SHALL BE REVEALED WITHOUT PERMISSION OR TO THE DETRIMENT OF THE OWNER. IT MUST BE RETURNED UPON REQUEST.

AS BUILT BURNER SPECIFICATION SHEET

Contact SW/AM **02/01/2021**

JOB DETAILS

Number	J0120197	**Order Number**	B0081346 - 1	**Quantity**	1
Customer	WICHITA BURNER			**Purchase Order**	JTHEQ1-0017730
Name	AMERICAN BOILER				

BURNER DETAILS

Model	CM10B-GO-30	**Serial Number(s)**	122082650	**Label**	B67598597
Mode Of Operation	MODODP			**Code**	UL,CSD-1,NFPA-85

HEAT EXCHANGER AND SITE DETAILS

Make	Superior			**Model**	650hp
Type	SCOTCH MARINE	**Combustion Chamber Press.**	3.0	**Site Altitude**	2000

PRIMARY GAS DETAILS (ALL PRESSURES ARE IN INCHES WC)

High Fire Manif. Press.	17.8	**High Fire Rate**	27300 MBH	**Side Orifice Size**	None		
Gas Reg. Outlet Press.	74.6	**Site Press.**	140.0 - 280.0	**Type**	Natural	**Pilot**	Natural
Min. Supply Press.	123.2	**Max. Design Press.**	280.0	**Gas Group**	4D		

SECONDARY GAS DETAILS (ALL PRESSURES ARE IN INCHES WC)

High Fire Manif. Press.		**High Fire Rate**	MBH	**Side Orifice Size**	
Gas Reg. Outlet Press.		**Site Press.**	-	**Type**	
Min. Supply Press.		**Max. Design Press.**			

OIL DETAILS (ALL PRESSURES ARE IN PSI)

Pump Pressure	62.8	**High Fire Rate**	195.0 GPH	**Oil Group**	4D
Compressor Pressure	52.8	**Type**	#2	**Grade**	#2

DIAGRAMS

Wiring	GO-J120197-1	**General Arrangement**	
Gas Piping	PDG-J120197	**Additional 1**	
Oil Piping	PDO-J120197	**Additional 2**	
Remote Panel		**Additional 3**	

ELECTRICAL CHARACTERISTICS

Control	115V/1PH/60HZ	**FLA**	6.0
Blower Motor	460V/3PH/60HZ	**FLA**	17.5
Remote Pump	460V/3PH/60HZ	**FLA**	1.15
Compressor	460V/3PH/60HZ	**FLA**	9.7
Clipped Circuit Board Part Number		**Min. Circuit Ampacity**	38.2

BURNER SETTINGS AND MISC.

Gas Ignition System	GAS PILOT	**Gas Inlet Location**		**Flame Detection**	SCANNER
Oil Ignition System	GAS PILOT	**Flange Setting**		**Diffuser Blade Setting**	

COMMENTS (MAY CONTINUE ON NEXT PAGE)

[1]Approximate operating pressure at the manifold inlet for initial start-up. Final pressure should be determined after checking actual flow with gas meter. Stack temperature, CO, CO_2, O_2, and furnace pressure will help in determining actual input when gas meter is not available for this unit.

[2]All components are rated for the maximum design pressure specified. That pressure must not be exceeded.

BILL OF MATERIAL

As-Built

Customer: WICHITA BURNER - 101373 **Purchase Order: JTHEQ1-0017730**

Job Number: J000120197 - 0 **Item: CM10B-GO-30** **Qty: 1** **Order Number: B000081346 - 1**

PFI Part No.	U\M	Qty.	Material Description	Ship Loose
004660	FT	1.33	LD-500-1 LOW DENSITY 1/2 INCH 1000 DEGREE FIBERGLASS BRAIDED ROPE P/N 21032	
050163	EA	1.00	3/4 HP 1725RPM 208/230/460/3 ODP 56C FRAME, CAT. .7518OT3E56C-S WEG MOTOR	
056150	EA	1.00	15 HP 3525 RPM 208/230/460/3 ODP 215T FR BM EM3314T HIGH EFFICIENCY MOTOR	
060420	EA	1.00	M9194C-1005 HONEYWELL MODUTROL MOTOR FIXED 90 DEGREE STROKE 300 INCH LB.	
061230	EA	1.00	4074 EDC HONEYWELL RESISTOR PACK FOR M954,M955,M974,M975 MOD MOTORS	
090526	EA	1.00	182 100% CHICAGO DESIGN 62 3500 RPM CW BLOWER AIR FOIL FAN WITH 1-3/8" BORE 62-0-0057	
101030	EA	1.00	59B-R (SG-0514X) NOZZLE RATE 240 GPH @ 300 PSI 1725 RPM WEBSTER PUMP,VITON SEAL	
102350	EA	1.00	ALUMINUM REMOTE FUEL UNIT STAND DWG. 218M-3	
102360	EA	1.00	ALUMINUM CAST REMOTE PUMP MOTOR ADAPTOR DWG. C-235SC-4	
102850	EA	1.00	RV3002 WEBSTER REGULATING VALVE 200 PSI 50-220 RANGE SET @ 100 PSI, 3/4-14 NPTF INLET & OUTLET	
121150	EA	1.00	ALO90 LOVEJOY PUMP COUPLING 5/8 X 1/2 WITH KEYWAY (68514445149)	
140020	EA	1.00	7990K10 4PDT CUTLER HAMMER GAS-OIL FUEL CHANGE-OVER SWITCH POSITIVE CENTER OFF	
140700	EA	1.00	CRTP1A9M9 OSLO SPST ROCKER SWITCH	
140720	EA	1.00	CRTP22A-9M9 OSLO DPDT NO CENTER OFF ROCKER SWITCH	
140740	EA	1.00	SPM1X399M9E OSLO N.O. MOMENTARY PUSHBUTTON SWITCH	
151604	EA	1.00	B428VXFM30IW 30" H2O ASHCROFT HIGH GAS PRESSURE SWITCH, MANUAL RESET	
151613	EA	1.00	B429VXFM-60 ASHCROFT LOW GAS PRESSURE SWITCH, MANUAL RESET	
171101	EA	1.00	RFS-4001-110 CLEVELAND CONTROLS AIR SWITCH W/ COMPRESSION FITTINGS, .17-20", FLANGE MTG.	
195930	EA	1.00	VKG10.100U 4" FULL PORT BUTTERFLY VALVE, 15 PSI, UL APPROVED, NPT THREAD	
197461	EA	2.00	V710LBSV22 3 INCH ASCO VALVE BODY STD. GUIDE & PROOF OF CLOSURE	
199502	EA	2.00	AH2E212S4 ON-OFF 14 SECOND 120/60, 110/50 PROOF OF CLOSURE ASCO ACTUATOR	
202650	EA	2.00	8040H8 3/8 INCH 15 PSI NEMA 4 120 VOLT 50/60 HZ. ASCO PILOT VALVE	
210210	EA	1.00	S302GF02V2AC9 N.O. 3/32 PORT 1/8 PIPE 115V. 150 PSI G.C. VALVE	

BILL OF MATERIAL

As-Built

Customer: WICHITA BURNER - 101373 **Purchase Order: JTHEQ1-0017730**

Job Number: J000120197 - 0 **Item: CM10B-GO-30** **Qty: 1** **Order Number: B000081346 - 1**

PFI Part No.	U\M	Qty.	Material Description	Ship Loose
211550	EA	2.00	VOG15.011U1(10) 2-3 WAY SIEMENS 3/4" OIL SHUT VALVE WITH PROOF OF CLOSURE SWITCH & ADJUSTABLE AUX. SWITCH, WITH 1/2 INCH HARDWARE KIT 120V 50/60 HZ.	
234120	EA	1.00	3/4 INCH 509T MILWAUKEE SWING CHECK VALVE WITH TEFLON DISC	
262200	EA	1.00	B-1/2-24-W HAUCK MODULATING OIL VALVE P/N HK12519	
262511	EA	1.00	HAUCK "B" SERIES METERING VALVE ADAPTER WITH INDICATOR	
284600	EA	1.00	S262SH02N3GJ7 1-1/4 INCH N.O. VENT VALVE 1,710,000 BTU 1 INCH PD 120V 18.5 WATTS	
302600	EA	1.00	220G 3 INCH MAXITROL REGULATOR WITH K 1-3 PSI SPRING	
302801	EA	1.00	325-3 3/8 INCH MAXITROL REGULATOR WITH R325C 10-22 RED SPRING	
320001	EA	1.00	1092-PF-G 6000 VOLT 50/60 HZ. ALLANSON GAS IGNITION TRANSFORMER WITH GROUND WIRE	
333011	EA	1.00	B500-0571-5F 500VA 480/240/208 TO 120 50/60 HZ. MICRON STEPDOWN TRANSFORMER WITH FUSE BLOCK: WILL NOT FIT INTO JUNCTION BOX PN: X09972	
351590	EA	1.00	3/8 INCH T58570SSC NIBCO OR 77C14227A APOLLO FULL PORT BRONZE BALL VALVE WITH LOCKING HANDLE	
351620	EA	1.00	1-1/4 INCH T5857066SSL NIBCO OR APOLLO 77C14627A FULL PORT BRONZE BALL VALVE WITH LOCKING HANDLE	
397522	EA	1.00	RM7840L-2075/U HONEYWELL AUTOMATIC PROGRAMMING CONTROL WITHOUT DISPLAY 50/60 HZ	
400930	EA	1.00	Q7800B-2003/U HONEYWELL UNIVERSAL WIRING	
402901	EA	1.00	136733 H.W. HEAT INSULATOR BLOCK FOR C7027 (1/2" NPT)	L
402901	EA	1.00	136733 H.W. HEAT INSULATOR BLOCK FOR C7027 (1/2" NPT)	
403465	EA	1.00	C7927A-1016 HONEYWELL SOLID STATE UV FLAME DETECTOR, 8' LEADS	
406990	EA	1.00	R7851B-1000 HONEYWELL DYNAMIC AMPLI-CHECK SOLID STATE AMPLIFIER 2-3 SECOND FFRT	
407710	EA	1.00	ST7800A-1039 HONEYWELL 30 SECOND PURGE TIMER	
432880	EA	1.00	L404V-1087 HONEYWELL OIL PRESSURE SWITCH 10-150 PSI SPST	
432892	EA	1.00	L404F-1383 10-150 PSI, AUTO RECYCLE H.W. PRESSURETROL	
463100	EA	1.00	0-20 0Z. 0-35 INCH 2-1/2 INCH DIAL 1/4 INCH LM CONNECTION WINTERS GAUGE PLP301 OR 161972A AMETEK US GAUGE	

BILL OF MATERIAL

As-Built

Customer: WICHITA BURNER - 101373 **Purchase Order: JTHEQ1-0017730**

Job Number: J000120197 - 0 **Item: CM10B-GO-30** **Qty: 1** **Order Number: B000081346 - 1**

PFI Part No.	U\M	Qty.	Material Description	Ship Loose
463100	EA	1.00	0-20 0Z. 0-35 INCH 2-1/2 INCH DIAL 1/4 INCH LM CONNECTION WINTERS GAUGE PLP301 OR 161972A AMETEK US GAUGE	
464250	EA	1.00	0-5 PSI. 2-1/2 INCH DIAL 1/4 INCH LOWER MOUNT WIKA GAUGE 611.10, OR P2LP12L005 PRECISION INSTRUMENTS	
465330	EA	2.00	0-100 PSI 2-1/2 INCH DIAL 1/4 INCH LOWER MOUNT WINTERS LIQUID FILLED GAUGE Q804	
480200	EA	1.00	RV4NAYSD-151A PRECISION ELECTRONIC POTENTIOMETER	
480560	EA	1.00	MPKES90B1/4 APEM POTENTIOMETER KNOB 679-3545-ND	
534610	EA	1.00	O RING, 2" O.D. X 1.875 I.D., BUNA N, 9452K119 (PACKAGED 100 PER PACKAGE)	
538001	EA	1.00	P/F AIR ATOMIZING NOZZLE, 300-80, DWG. 90L352C-7	
555070	EA	1.00	CT-ERD.12 1SVR500100R0000 0.1 SECOND TO 100 HOUR DELAY ON MAKE ADJUSTABLE DIN RAIL MOUNTABLE ABB TIMER	
555500	EA	3.00	55.33.8.120.0000 FINDER OR PT320615 SCHRACK 3PDT RELAY	
555510	EA	3.00	94.73SMA FINDER OR PT78730 SCHRACK SOCKET FOR 3PDT AND 55 SERIES RELAYS	
577041	EA	1.00	STARTER 1.5/2/3/5HP 1.1-1.6A 120V COIL, SIEMENS 3RT2015-1AK61 & 3RU2116-1ABO	
577496	EA	1.00	STARTER 3/5/10/10 HP 9-12.5A 120V COIL,1NO/1NC AUX. SIEMENS 3RT2018-1AK61 & 3RU2116-1KBO	
577553	EA	1.00	STARTER 10/10/25/25HP 6-25A, 120V COIL, SIEMENS 3RT2028-1AK60 & 3RB3026-2QB0	
610400	EA	1.00	SLU-35 ILSCO GROUNDING LUG	
612010	EA	28.00	019904225 ENTRELEC D6/8.ADO 14-16 GAUGE ADO, SCREW TERMINAL,BLOCK	
612130	EA	1.00	0199075.26 ENTRELEC D6/8.ADO 14-16 GAUGE AQO,TERMINAL RED (GAS VALVE)	
612200	EA	5.00	11511811 ENTRELEC M6/8 8MM TERMINAL BLOCK 50 AMP 8-22 GA. SCREW	
612202	EA	1.00	1SNA400186R2100 M6/8 ENTRELEC RED TERMINAL BLOCK	
633400	EA	1.00	SC110N-R PANEL MOUNT MALLORY BUZZER 110 VOLT 50/60 HZ. OR MC-09-201-SR FLOYD BUZZER	
659700	EA	1.00	SIEMENS 22MM AMBER LIGHT, 3SU1103-6AA00-1AA0	
659701	EA	1.00	SIEMENS 22MM GREEN LIGHT, 3SU1103-6AA40-1AA0	
659702	EA	1.00	SIEMENS 22MM RED LIGHT, 3SU1103-6AA20-1AA0	
659703	EA	1.00	SIEMENS 22MM BLUE LIGHT, 3SU1103-6AA50-1AA0	
659704	EA	1.00	SIEMENS 22MM WHITE LIGHT, 3SU1103-6AA60-1AA0	

BILL OF MATERIAL

As-Built

Customer: WICHITA BURNER - 101373 **Purchase Order: JTHEQ1-0017730**

Job Number: J000120197 - 0 **Item: CM10B-GO-30** **Qty: 1** **Order Number: B000081346 - 1**

PFI Part No.	U\M	Qty.	Material Description	Ship Loose
731000	EA	1.00	TYPE YS12-CI 3/8 INCH TITAN OR NO. 11-M MUELLER Y STRAINER WITH 100 MESH S.S. SCREEN	
731200	EA	1.00	TYPE YS12-CI 3/4 INCH TITAN OR NO. 11-M MUELLER OR TYPE B KECKLEY Y STRAINER WITH 100 MESH S.S. SCREEN	
731751	EA	1.00	TYPE B 3 INCH KECKLEY OR NO. 11-M MUELLER Y 3 INCH TYPE B KECKLEY Y STRAINER WITH PLUG	
800045	EA	3.00	CMAX LINKAGE ROD BLOCK, 0.377 HOLE, DWG. 45B258C	
879060	EA	1.00	1/4 INCH STANDARD BLACK SQUARE HEAD PIPE PLUG	
910490	IN	24.00	MCCC39201 BLACK PVC WIDE FLEXIBLE TRIM	
910500	EA	2.00	13ZN-01 SIERRA PACIFIC UNIVERSAL CABINET LATCH	
910770	FT	5.00	3/8 INCH O.D. X .035 3003-0 ALUMINUM TUBE (5 FT. LENGTHS)	L
910850	EA	1.00	1IN. X 15IN. STAINLESS STEEL FLEX HOSE 1IN. MALE PIPE BOTH ENDS	L
912794	EA	1.00	CM9/15 REQ. REFRACTORY DIMENSIONS TAG PER DRAWING M380MC-7	
925020	EA	1.00	ATMR6 6 AMP 600V. CLASS CC NON-MOTOR RATED FERRAZ SHAWMUT FUSE	
926130	EA	2.00	ATDR-2.8 2.8 AMP FERRAZ SHAWMUT LOW PEAK DUAL ELEMENT TIME DELAY FUSE	
980031	EA	3.00	1/4 INCH BALL VALVE WITH TEE HANDLE S95B46	
980031	EA	4.00	1/4 INCH BALL VALVE WITH TEE HANDLE S95B46	
980402	EA	1.00	3/8" S95C41 BALL VALVE LONG HANDLED	
985400	EA	1.00	1 INCH MODEL 70101-300 COMBU FUEL OIL FILTER (Max pressure 30 PSI)	L
A28349	EA	1.00	24" PANEL TOP (4) RECT., (5) 22MM, POT. & C/O "16"	
B12101	EA	14.00	CM10B/C 3/8 X 3-1/2 GAS JET W/ ORF	
B12151	EA	4.00	CM10B-11 ROPE RETENTION BRKT	
B13009	EA	1.00	CM10B/C ACCESS COVER PLATE "2014"	
B14037	EA	1.00	CM9-14 SIGHT GLASS COVER PLATE	
B14300	EA	1.00	CM10 DAMPER BACK PLATE	
B14301	EA	1.00	CM10 DAMPER FRONT PLATE	
B14302	EA	1.00	CM10 DAMPER TOP WRAP	
B14309	EA	1.00	CM10 DAMPER RT SIDE ANGLE	
B14310	EA	1.00	CM10 DAMPER LEFT SIDE ANGLE	
B14311	EA	1.00	CM10 DAMPER FRONT ANGLE	
B14312	EA	2.00	CM10 DAMPER BLADE SEAL	
B14313	EA	1.00	CM10 DAMPER SCREEN	

BILL OF MATERIAL

As-Built

Customer: WICHITA BURNER - 101373 **Purchase Order: JTHEQ1-0017730**

Job Number: J000120197 - 0 **Item: CM10B-GO-30** **Qty: 1** **Order Number: B000081346 - 1**

PFI Part No.	U\M	Qty.	Material Description	Ship Loose
B14314	EA	1.00	CM10 DAMPER BASE BACK ANGLE	
B14315	EA	1.00	CM10 8" IFGR BLANKING FLANGE	
B14335	EA	1.00	CM MOD MOTOR BRACKET	
B14367	EA	2.00	CM10 DAMPER SHORT AXLE "06"	
B14368	EA	1.00	CM10 DAMPER LONG AXLE "06" 1/2"DIA	
B14750	EA	1.00	CM10-10B 182 72% AIR INLET ALTERED	
B14903	EA	1.00	3/8-24 ALL THRD DPR CROSS LINK ROD 2.969	
B14904	EA	1.00	3/8-24 ALL THRD DPR CROSS LINK 2.537"	
B19114	EA	2.00	CM10-CM10C RD TOP DAMPER SIDE "14"	
B20600	EA	1.00	CM10 AIR HOUSING WELD ASSEMBLY	
B20651	EA	1.00	CM10 .734" DISHED MOTOR PLATE 215T FR ASSEMBLY	
B20750	EA	1.00	CM9-CM10C 6.625" DIFF WELD ASSY	
B20751	EA	1.00	CM NOZZLE ADAPTOR WELD ASSEMBLY	
B20818	EA	3.00	CM10 DPR AIR FOIL BLADE ASSY"06"	
B22040	EA	1.00	CM10B/C BLAST TUBE AS EXTERNAL ADJ"2014	
B30000	EA	1.00	CM10B/C OIL GUN ASSEMBLY	

BILL OF MATERIAL

As-Built

Customer: WICHITA BURNER - 101373 **Purchase Order: JTHEQ1-0017730**

Job Number: J000120197 - 0 **Item: CM10B-GO-30** **Qty: 1** **Order Number: B000081346 - 1**

PFI Part No.	U\M	Qty.	Material Description	Ship Loose
B30000 Components		Description		
538100			P/F OIL NOZZLE ADAPTER, 3/8" NPT THREADS	
538101			P/F ATOMIZING NOZZLE TIP CAP	
831000			3/8 X 3/8 TUBING TO MALE PIPE 90DEG.	
862400			3/8 X 1-1/2 SCHEDULE 40 STANDARD BLACK P	
862763			3/8 X 7 SCHEDULE 40 STANDARD BLACK PIPE	
862764			3/8 X 8 SCHEDULE 40 STANDARD BLACK PIPE	
878100			3/8 STANDARD BLACK GROUND JOINT MALLEABL	
B20701			CM10 GUN ADJ PLATE ASSY	
F36050			CM PILOT ASSY	
	F36050 Components		Description	
	800033		C10 ELECTRODE CLAMP PAIR PER DRAWING	
	861800		1/4 X 4 SCHEDULE 40 STANDARD BLACK PIPE	
	F10702		3/8"x3/8" LOCK COLLAR ASSY	
	F10703		CM PILOT ORF 1/8" HEX PLUG DRILLED 5/32	
	F20250		CM PILOT HEAD WELD ASSY	
	X02071		3/8 X 1/4 STD BLK BELL RED COUP	
	X02678		3/8 X 1/4 STRAIGHT COMPRESSION CONNECTOR	
	X04222		90L252C C7/8 IGNITION ELECTRODE	
M12019			3/8 X 8.5 STD BLK PIPE NIPPLE	
M12024			3/8 X 10 PIPE NIPPLE	
X03005			3/8 BLK 90 DEG PIPE ELBOW	
X09196			ALUMINUM WASHER, 1.375 X 1.130 X .063	
B30140	EA	1.00	LE-7 ATLAS COPCO COMPRESSOR ASSY 7.5HP 056030 motor	L

BILL OF MATERIAL

As-Built

Customer: WICHITA BURNER - 101373 **Purchase Order: JTHEQ1-0017730**

Job Number: J000120197 - 0 **Item: CM10B-GO-30** **Qty: 1** **Order Number: B000081346 - 1**

PFI Part No.	U\M	Qty.	Material Description	Ship Loose
B30140 Components		**Description**		
056030		7-1/2 HP 1760 RPM 230/460/3 ODP 213T FR.		
121171		L100 LOVEJOY COUPLING BODY, 1-3/8" BORE,		
121172		L100 LOVEJOY COUPLING BODY, 35MM, 1CXY7		
121181		L099-100H HYTREL COUPLING INSERT		
234605		3/8" BRASS ELBOW NEEDLE VALVE TV45-66		
465300		0-160 PSI LIQUID FILLED 2-1/2 INCH DIAL		
751472		1503234800 CONNECTION FOR LE40-10 ATLAS		
751473		0653909800 FLAT GASKET FOR CONNECTION L		
751474		0686371602 HEXAGON PLUG FOR CONNECTION		
751480		LE7-10 8115-4600-19 ATLAS COPCO		
751680		112C-2-150 1/4"KINGSTON RELIEF VALVE SET		
862400		3/8 X 1-1/2 SCHEDULE 40 STANDARD BLACK P		
863560		1/2 X 6 SCHED. 40 STD. BLK. PIPE NIPPLE		
867160		1 X 1/2 STD. BLACK MALLEABLE IRON BELL		
870350		3/8 STD. BLACK MALLEABLE IRON THREADED		
873150		1/2 STANDARD BLACK MALLEABLE IRON BANDED		
A25954		LE-7 COMPRESSOR MOUNTING BASE		
M10200		LE-7 COMPRESSOR COUPLING GUARD		
X02070		1/2 X 3/8 STD BLK HEX BUSHING		
X02078		3/8 X 1/4 STD BLK HEX BUSHING		
X02172		1/2 X 1-1/2 SCH 40 BLK NIPPLE		
X09020		4450K3 3/8" MUFFLER/FILTER		
X09412		3/8-16 X 1-1/2 HEX HD CAP SCREW		
X09658		3/8 MED. SPLIT LOCK WASHER		
C13180	EA	1.00	REMOTE PUMP STAND	
C13186	EA	1.00	REMOTE PUMP STAND COVER PLATE	
E10664	EA	2.00	CMAX 24" HI PNL BOX BRKT EXT.4.718" "17"	
E21001	EA	1.00	6 X 8 X 4 HOFFMAN WITH 1/2" COUPLING	
E24211	EA	1.00	24 X 24 PANEL BOX ASSEMBLY "16"	
E24621	EA	1.00	24 x 24 DOOR ASSY "17"	
E80414	EA	1.00	24 x 24 CHASSIS "16"	
M10591	EA	2.00	SIEMENS PROOF OF CLOSURE OIL VALVE GUARD	
M10604	EA	2.00	CMAX PROOF OF CLOSURE OIL VALVE BRACKET	
M20050	EA	2.00	2.125 X 1/2 I.D. CROSS STRAP ARM TAPPED	
M20057	EA	1.00	1/2"I.D. DUAL CROSS STRAP DPR ARM TAPPED	
M20112	EA	1.00	LARGE BURNER PED PLATE WELD ASSEMBLY	
M20487	EA	2.00	3 INCH FIGURE 611 UL HOMESTEAD GAS COCK CSD-1	
M29006	EA	1.00	3 X 6 JUNCTION BOX NIPPLE	

BILL OF MATERIAL

As-Built

Customer: WICHITA BURNER - 101373 **Purchase Order: JTHEQ1-0017730**

Job Number: J000120197 - 0 **Item: CM10B-GO-30** **Qty: 1** **Order Number: B000081346 - 1**

PFI Part No.	U\M	Qty.	Material Description	Ship Loose
M30047	EA	1.00	5/8" CM VARICAM STRAIGHT GAS SINGLE FUEL ASSEMBLY	
P22330	EA	1.00	B-1/2 HAUCK MOD OIL VALVE BRACKET	
X02034	EA	2.00	1/4 INCH STD BLACK HALF COUPLING	
X02339	EA	1.00	3 X 3-1/2 STANDARD BLACK PIPE NIPPLE	
X02450	EA	12.00	PFL203 KML FLANGETTE (2 PER BOX)	
X02469	EA	6.00	SA201-8 1/2" BALL BEARING	
X02622	EA	1.00	1/4 BRASS HEX NIPPLE 122-4	
X02677	EA	1.00	3/8 X 1/4 COMP-MP STR 68-64	
X02692	EA	18.00	1/4-20 KEP NUT	
X04289	EA	4.00	3/8-24 ROD END BALL JOINT RIGHT 6072K174	
X04289	EA	8.00	3/8-24 ROD END BALL JOINT RIGHT 6072K174	
X09252	EA	4.00	3/8 X 1 X 25/64 X .050 18-8 S.S. FLAT WASHER	
X09253	EA	4.00	3/8 X 1/2 HEX SOCKET HEAD SHOULDER SCREW	
X09254	EA	6.00	5/16-24 X 1/2 HEX HEAD CAP SCREW(ZINC PLATED)	
X09292	EA	12.00	1/4-20 X 3/4 CARRIAGE BOLT GRADE 2 (ZINC PLATED)	
X09301	EA	1.00	1/4-20 DOUBLE TAB WELD NUT	
X09346	EA	6.00	1/4-20 X 3/4 HEX HEAD CAP SCREW	
X09377	EA	15.00	10-32 X 1-1/2 SOCKET CAP SCRW FT	
X09412	EA	8.00	3/8-16 X 1-1/2 HEX HD CAP SCREW	
X09499	EA	6.00	1/4-20 X 5/8 SQ. HEAD CONE POINT SET SCREW	
X09557	EA	15.00	10-32 NYLON INSET HEX LOCK NUT 90631A411	
X09566	EA	4.00	5/16-18 WHIZ NUT	
X09569	EA	4.00	3/8-24 RIGHT HAND HEX NUT PLATED	
X09569	EA	8.00	3/8-24 RIGHT HAND HEX NUT PLATED	
X09649	EA	30.00	NO. 10 EXT. TOOTH LOCK WASHER	
X09656	EA	6.00	1/2 INCH STD. FLAT CUT WASHER	
X09709	FT	16.00	3/8-24 RIGHT HAND ALL THREAD ROD PLATED	
X09731	EA	1.00	2 INCH DIA. 1/8 INCH THICK BOROSILICATE SIGHT GLASS 8477K48	
X09775	EA	4.00	1/4-20 X 3-1/2 U BOLT	
X09795	IN	40.50	173220.05 PREPUNCHED DIN RAIL, ABB ENTRELEC	

Power Flame Incorporated
2001 S 21st Street
Parsons, Ks 67357
Ph: (620) 421-0480
Fx: (620) 421-0948
csd@powerflame.com

Date Generated: 02/01/2021
Job Number: J000120197-0
Order Number: B000081346-1
Burner Model: CM10B-GO-30
Serial Number:
Sold to: WICHITA BURNER

Spare Parts List and Order Form

Part#	Req'd Qty. Per Burner		Part Description	Is Obsolete	Alternate Part	Net Each	Qty. Ordered
056150	1	EA	15 HP 3525 RPM 208/230/460/3 ODP 215T FR	No			
060420	1	EA	M9194C-1005 HONEYWELL MODUTROL MOTOR	No			
090526	1	EA	182 100% CHICAGO DESIGN 62 3500 RPM CW	No			
101030	1	EA	59B-R (SG-0514X) NOZZLE RATE 240 GPH @	No			
102850	1	EA	RV3002 WEBSTER REGULATING VALVE 200 PSI	No			
121150	1	EA	ALO90 LOVEJOY PUMP COUPLING 5/8 X 1/2	No			
140020	1	EA	7990K10 4PDT CUTLER HAMMER GAS-OIL FUEL	No			
140700	1	EA	CRTP1A9M9 OSLO SPST ROCKER SWITCH	No			
140720	1	EA	CRTP22A-9M9 OSLO DPDT NO CENTER OFF	No			
140740	1	EA	SPM1X399M9E OSLO N.O. MOM PUSHBTN SWITCH	No			
171101	1	EA	RFS-4001-110 CLEVELAND CONTROLS AIR	No			
197461	2	EA	V710LBSV22 3 INCH ASCO VALVE BODY STD.	No			
199502	2	EA	AH2E212S4 ON-OFF 14 SECOND 120/60,	No			
202650	2	EA	8040H8 3/8 INCH 15 PSI NEMA 4 120 VOLT	No			
210210	1	EA	S302GF02V2AC9 N.O. 3/32 PORT 1/8 PIPE	No			
262200	1	EA	B-1/2-24W HAUCK MODULATING OIL VALVE	No			
302600	1	EA	220G 3 INCH MAXITROL REGULATOR WITH	No			
302801	1	EA	325-3 3/8 INCH MAXITROL REGULATOR WITH	No			
320001	1	EA	1092-PF-G 6000 VOLT 50/60 HZ. ALLANSON	No			
403465	1	EA	C7927A-1016 HONEYWELL SOLID STATE UV	No			
406990	1	EA	R7851B-1000 HONEYWELL DYNAMIC	No			
407710	1	EA	ST7800A-1039 HONEYWELL 30 SECOND PURGE	No			
465330	2	EA	0-100 PSI 2-1/2 INCH DIAL 1/4 INCH LOWER	No			
534610	1	EA	O RING, 2" O.D. X 1.875 I.D., BUNA N, 94	No			
538001	1	EA	P/F AIR ATOMIZING NOZZLE, 300-80, DWG.	No			

555500	3	EA	55.33.8.120.0000 FINDER OR PT320615 SCHR	No
555510	3	EA	94.73SMA FINDER OR PT78730 SCHRACK	No
B20750	1	EA	CM9-CM10C 6.625" DIFF WELD ASSY	No
X04289	4	EA	3/8-24 ROD END BALL JOINT RIGHT 6072K174	No
X04289	8	EA	3/8-24 ROD END BALL JOINT RIGHT 6072K174	No

————Send Orders To:————

Please visit www.powerflame.com for your local representative.

————————————Ship To————————————

Please enter my purchase order for the above spare parts on out P.O. # _____

THIS QUOTATION IS VALID FOR 30 DAYS FROM THE DATE GENERATED AND IS SUBJECT TO THE PFI CONDITIONS OF SALE.

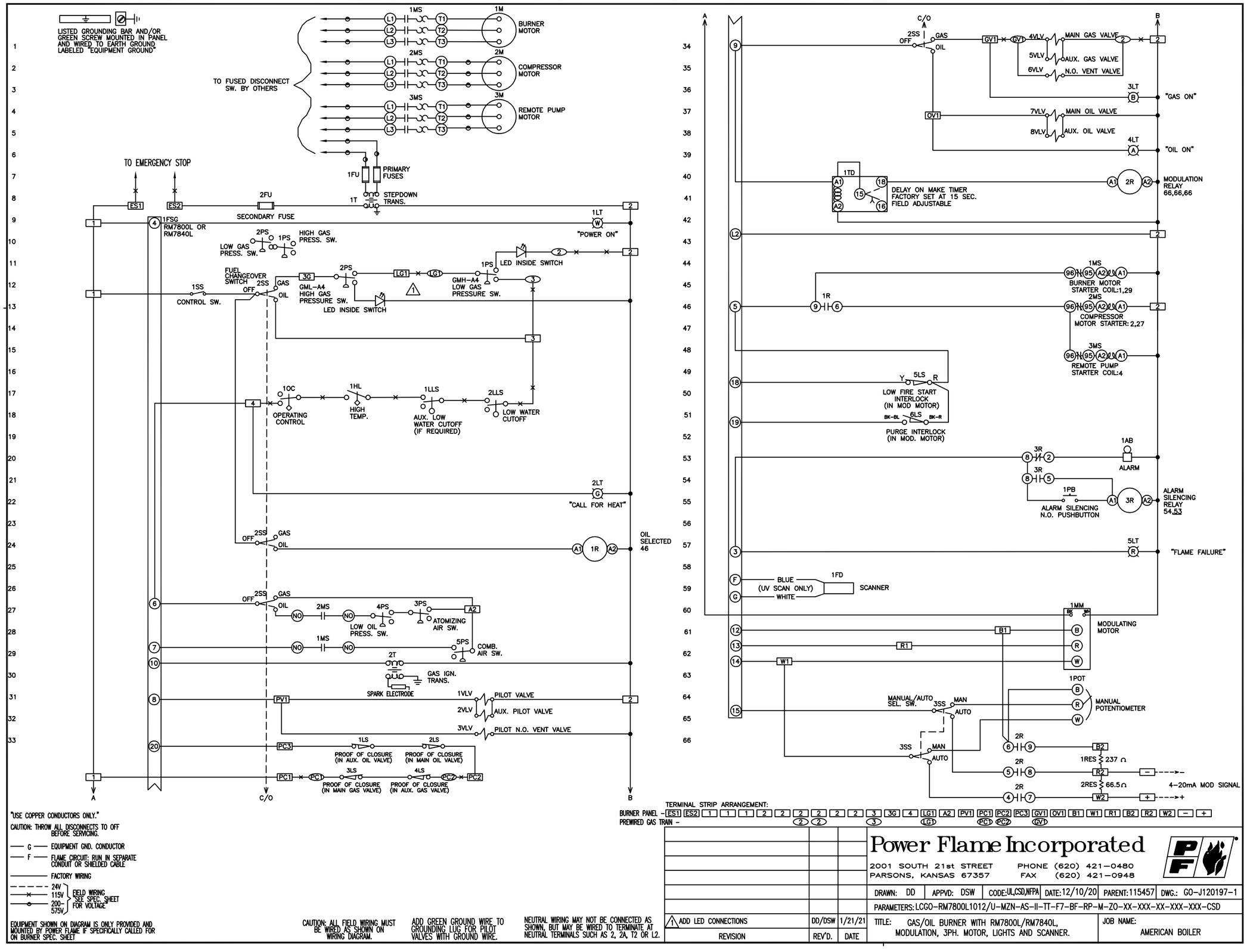

"USE COPPER CONDUCTORS ONLY."

CAUTION: THROW ALL DISCONNECTS TO OFF BEFORE SERVICING.

— G — EQUIPMENT GND. CONDUCTOR

— F — FLAME CIRCUIT: RUN IN SEPARATE CONDUIT OR SHIELDED CABLE

——— FACTORY WIRING

- - - - - 24V
—×— 115V
—o— 200–575V
FIELD WIRING SEE SPEC. SHEET FOR VOLTAGE

EQUIPMENT SHOWN ON DIAGRAM IS ONLY PROVIDED AND MOUNTED BY POWER FLAME IF SPECIFICALLY CALLED FOR ON BURNER SPEC. SHEET

CAUTION: ALL FIELD WIRING MUST BE WIRED AS SHOWN ON WIRING DIAGRAM.

ADD GREEN GROUND WIRE TO GROUNDING LUG FOR PILOT VALVES WITH GROUND WIRE.

NEUTRAL WIRING MAY NOT BE CONNECTED AS SHOWN, BUT MAY BE WIRED TO TERMINATE AT NEUTRAL TERMINALS SUCH AS 2, 2A, T2 OR L2.

TERMINAL STRIP ARRANGEMENT:

BURNER PANEL – ES1 | ES2 | 1 | 1 | 1 | 2 | 2 | 2 | 2 | 2 | 2 | 3 | 3G | 4 | LG1 | A2 | PV1 | PC1 | PC2 | PC3 | GV1 | OV1 | B1 | W1 | R1 | B2 | R2 | W2 | – | +

PREWIRED GAS TRAIN – (2) (2) (3) (LG1) (PC1) (PC2) (GV1)

REVISION	REV'D.	DATE
1 ADD LED CONNECTIONS	DD/DSW	1/21/21

Power Flame Incorporated

2001 SOUTH 21st STREET
PARSONS, KANSAS 67357
PHONE (620) 421–0480
FAX (620) 421–0948

DRAWN:	APPVD:	CODE:	DATE:	PARENT:	DWG.:
DD	DSW	UL,CSD,NFPA	12/10/20	115457	G0–J120197–1

PARAMETERS: LCGO–RM7800L1012/U–MZN–AS–II–TT–F7–BF–RP–M–ZO–XX–XXX–XX–XXX–XXX–CSD

TITLE: GAS/OIL BURNER WITH RM7800L/RM7840L, MODULATION, 3PH. MOTOR, LIGHTS AND SCANNER.

JOB NAME: AMERICAN BOILER

PROPRIETARY AND CONFIDENTIAL INFORMATION OWNED BY POWER FLAME INCORPORATED. IT SHALL NOT BE REPRODUCED, IN WHOLE OR IN PART, AND SHALL NOT BE DISCLOSED TO ANYONE OUTSIDE POWER FLAME WITHOUT THE PRIOR EXPRESS APPROVAL OF POWER FLAME.

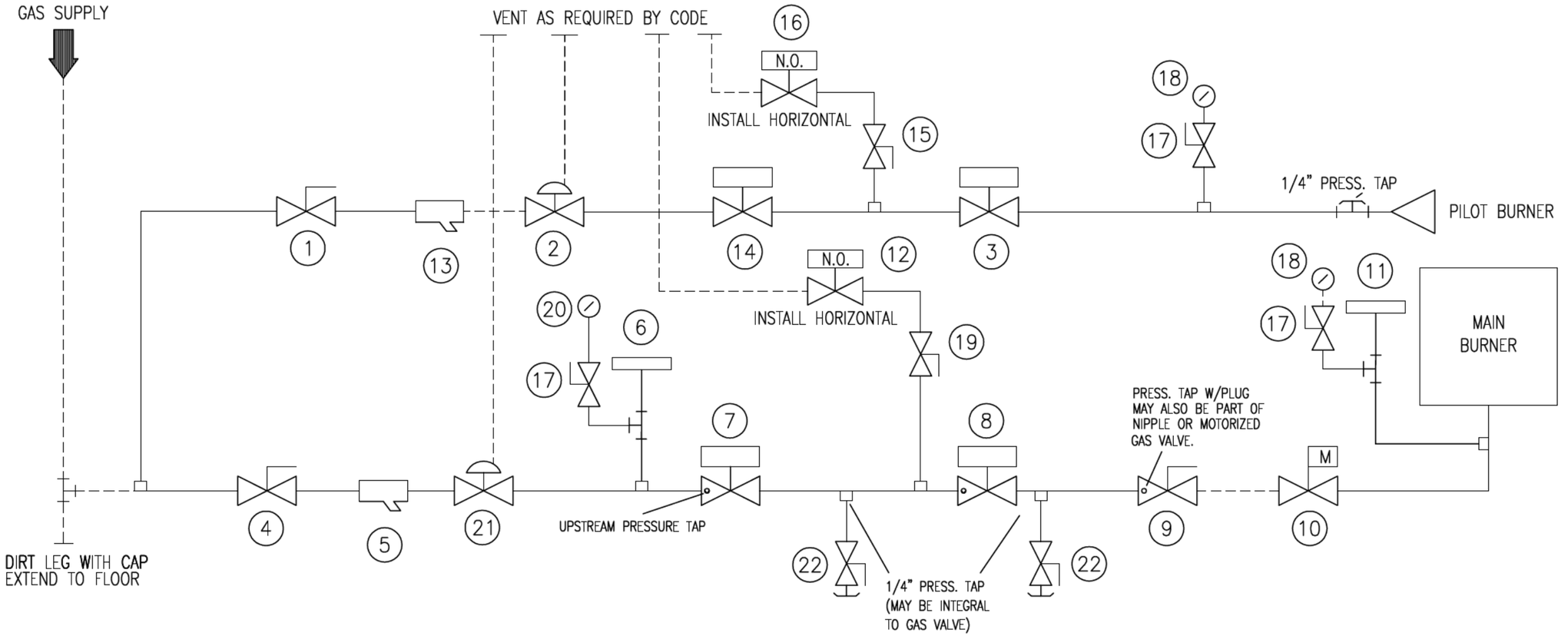

ITEM	PART NUMBER	DESCRIPTION
1	980402	PILOT SHUTOFF COCK
2	302801	PILOT REGULATOR
3	202650	PILOT VALVE
4	M20487	MAIN GAS SHUTOFF COCK
5	731751	MAIN GAS 'Y' STRAINER
6	151613	LOW GAS PRESS. SW.
7	199502 & 197461	AUX. GAS VALVE W/ P.O.C.
8	199502 & 197461	MAIN GAS VALVE W/ P.O.C.
9	M20487	MAIN GAS LEAK TEST COCK
10	195930	BUTTERFLY VALVE
11	151604	HIGH GAS PRESS. SW.
12	284600	N.O. VENT VALVE
13	731000	PILOT 'Y' STRAINER
14	202650	AUX. PILOT VALVE
15	351590	PILOT N.O. VENT VALVE LOCKING COCK
16	210210	PILOT N.O. VENT VALVE
17	980031	GAUGE COCK
18	463100	PRESSURE GAUGE
19	351620	N.O. VENT VALVE LOCKING COCK
20	464250	PRESSURE GAUGE
21	302600	MAIN GAS REGULATOR
22	980031	LEAK TEST COCK

NOTE: WHEN PILOT GAS PRESS. REG. IS AGA CERTIFIED DEVICE WITH INTEGRAL LEAK LIMITING ORIFICE; SUCH AS RV-20, RV-10 AND RV-12, VENT LINE FOR PILOT GAS PRESS. REG. MAY NOT BE REQ'D. UNLESS SPEC'D. BY OTHER CODES. (NO PROVISION FOR EXTERNAL VENTING ON RV-10 & 12) (RV-20 HAS OPTIONAL VENTING WITH P/N. 30912)

REFER TO SPECIFIC REGULATOR LITERATURE FOR RECOMMENDED STRAIGHT RUN OF PIPING BEFORE/AFTER REGULATOR AND SENSING LINE (IF APPLIC.)

——— FACTORY PIPED
- - - - - - - FIELD PIPED

CAUTION: ALL FIELD PIPED COMPONENTS MUST BE MOUNTED IN THE PROPER LOCATION AND PROPER DIRECTION OF GAS FLOW.

REVISION	REV'D.	DATE

Power Flame Incorporated
2001 SOUTH 21st STREET
PARSONS, KANSAS 67357
PHONE (620) 421-0480
FAX (620) 421-0948

DRAWN:	APPVD:	DATE:	PARENT:	DWG.:
DD	DSW	12/10/20	117702	PDG-J120197

DRAWING PARAMETERS: N/A
CODE: UL, CSD-1, NFPA

TITLE: GAS PIPING FOR MODULATION BURNER WITH INPUTS 12,500,000 AND ABOVE BTU'S.

JOB NAME: AMERICAN BOILER

PROPRIETARY AND CONFIDENTIALITY NOTICE: THE CONTENTS OF THIS TEMPLATE CONSTITUTE PROPRIETARY AND CONFIDENTIAL INFORMATION OWNED BY POWER FLAME INCORPORATED. IT SHALL NOT BE REPRODUCED, IN WHOLE OR IN PART, AND SHALL NOT BE DISCLOSED TO ANYONE OUTSIDE POWER FLAME WITHOUT THE PRIOR EXPRESS APPROVAL OF POWER FLAME.

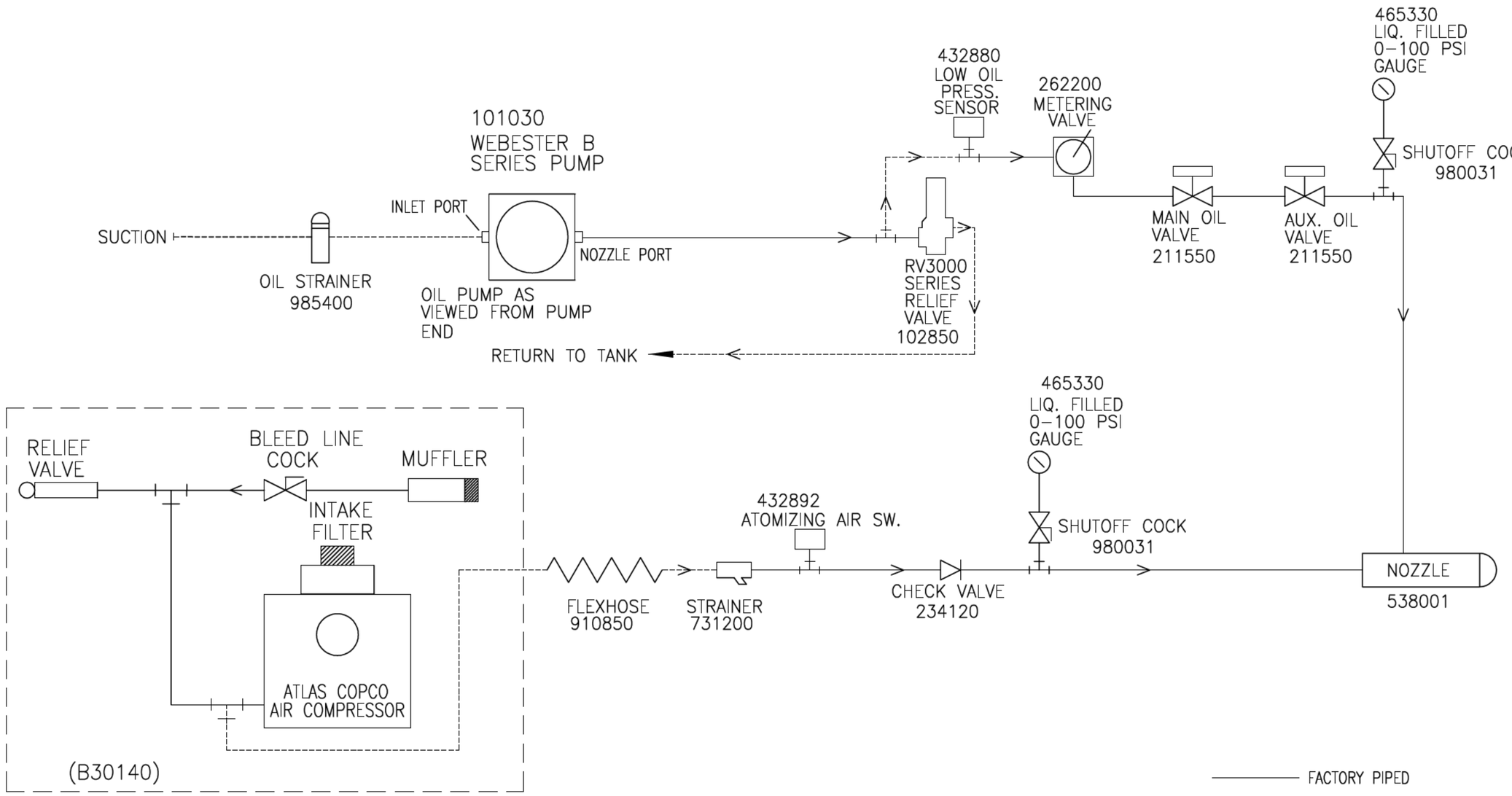

CAUTION: ALL FIELD PIPING MUST BE MOUNTED IN THE PROPER LOCATION AND IN PROPER DIRECTION OF OIL FLOW.

DO NOT USE TEFLON TAPE

EQUIPMENT SHOWN ON DIAGRAM IS ONLY PROVIDED AND MOUNTED BY POWER FLAME IF SPECIFICALLY CALLED FOR ON BURNER SPEC. SHEET.

REVISION	REV'D.	DATE

Power Flame Incorporated
2001 SOUTH 21st STREET
PARSONS, KANSAS 67357
PHONE (620) 421–0480
FAX (620) 421–0948

DRAWN: DD	APPVD: DSW	DATE: 12/10/20	PARENT:115457	DWG.: PDO–J120197	
DRAWING PARAMETERS: N/A	CODE: UL, CSD–1, NFPA–85				
TITLE: CM #2 OIL PIPING SCHEMATIC FULL MOD. WITH REMOTE PUMP & AIR COMPRESSOR.			JOB NAME: AMERICAN BOILER		

PROPRIETARY AND CONFIDENTIALITY NOTICE: THE CONTENTS OF THIS TEMPLATE CONSTITUTE PROPRIETARY AND CONFIDENTIAL INFORMATION OWNED BY POWER FLAME INCORPORATED. IT SHALL NOT BE REPRODUCED, IN WHOLE OR IN PART, AND SHALL NOT BE DISCLOSED TO ANYONE OUTSIDE POWER FLAME WITHOUT THE PRIOR EXPRESS APPROVAL OF POWER FLAME.

STEAM HOSE

Note: *All steam hoses will last longer if they are drained after each use. Water that is left in steam hose tends to be absorbed into the tube compound. When the hose is rapidly reheated, the condensed moisture vaporizes in the rubber compound causing blistering of the tube. In general, steam hoses are not a substitute for steel piping and should not be used in manifold systems or any other permanent installation.*

G571... EPDM STEAM

G571 features a braided steel wire reinforcement which allows better retention to crimped fittings as opposed to clamped fittings when assembled. It is suitable for conveying saturated steam to 250 psi.

Tube: Smooth, black, electrically conductive EPDM rubber.

Reinforcement: Braided layers of high-tensile steel wire.

Cover: Wrapped finish, red, abrasion, weather, and heat resistant EPDM rubber.

Temperature Range: -40°C (40°F) to 210°C (410°F) for steam, 95°C (205°F) for hot water.

Couplings: Only G29 series crimpable ground joint stems should be used. Always use G29CR crimp ferrules to prevent stem blowout. For pipe thread, please use Pulsar 4400 Series Crimp Fittings.



Clamp Selection Chart:	
Hose Part No.	**Clamp Part No.**
G571-075	G29CR-075
G571-100	G29CR-100
G571-200	G29CR-200

I.D.	Part Number	O.D.	Working Pressure	Weight per ft	Standard Length	
¾"	G571-075	1.22"	250 psi	0.44 lb	50 or 100 ft	See Prices Online
1	G571-100	1.50	250	0.67	50 or 100	
2	G571-200	2.64	250	1.44	50 or 100	

G572... RED DEVIL

Red Devil is manufactured using layers of high-tensile spiral wire for extra flexibility and with a heavy, wrapped cover for durability. It is rated for saturated steam to 250 psi and is our most popular steam hose for heavy industrial applications.

Tube: Black EPDM rubber compounded for high resistance to heat aging.

Reinforcement: Spiral layers of brass-plated, high-tensile, steel wire.

Cover: Wrapped finish, red, abrasion, weather, and heat resistant EPDM rubber, pin-pricked to prevent blistering.

Temperature Range: -40°C (-40°F) to 208°C (406°F) ...short peaks to 232°C (450°F).

Couplings: Only G29 series ground joint or G23 series male NPT stems should be used. Always use G29C series interlocking clamps to prevent stem blowout.



Clamp Selection Chart:	
Hose Part No.	**Clamp Part No.**
G572-050	G29C-050A
G572-075	G29C-075A
G572-100	G29C-100AA
G572-125	G29C-100B
G572-150	G29C-150AA
G572-200	G29C-200AA
G572-300	G29C-300AA

I.D.	Part Number	O.D.	Working Pressure	Weight per ft	Length	
½"	G572-050	0.98"	250 psi	0.34 lb	50 or 100 ft	
¾	G572-075	1.22	250	0.45	50 or 100	See Prices Online
1	G572-100	1.46	250	0.61	50 or 100	
1¼	G572-125	1.75	250	0.77	50 or 100	
1½	G572-150	2.05	250	1.00	50 or 100	
2	G572-200	2.58	250	1.45	50 or 100	
3	G572-300	3.78	250	2.89	50 or 100	

For popular steam hose assemblies see page 58.

STEAM HOSE

Note: *All steam hoses will last longer if they are drained after each use. Water that is left in steam hose tends to be absorbed into the tube compound. When the hose is rapidly reheated, the condensed moisture vaporizes in the rubber compound causing blistering of the tube. In general, steam hoses are not a substitute for steel piping and should not be used in manifold systems or any other permanent installation.*

G573... CHLOROBUTYL STEAM

Chlorobutyl rubber has excellent heat resistance and is less permeable to gases than other synthetic rubbers. These characteristics provide for a steam hose with improved life expectancy. Not only does the tube compound not age so quickly, but it absorbs much less steam. When steam hoses cycle from hot to cold, the steam that has been absorbed into the steam hose tube condenses. When it is suddenly re-heated, the water can vaporize and cause tiny "explosions" into the tube. The result is an effect called "popcorning" where the hose bore appears to have bubbled. Chlorobutyl rubber has improved resistance to this effect.

Tube: Black Chlorobutyl rubber compounded for high resistance to heat aging.

Reinforcement: Spiral layers of brass-plated, high-tensile, steel wire.

Cover: Wrapped finish, red, abrasion, weather, and heat resistant EPDM rubber, pin-pricked to prevent blistering.

Temperature Range: -40°C (-40°F) to 208°C (406°F) ...short peaks to 232°C (450°F).

Couplings: Only G29 series ground joint or G23 series male NPT stems should be used. Always use G29C series interlocking clamps to prevent stem blowout.

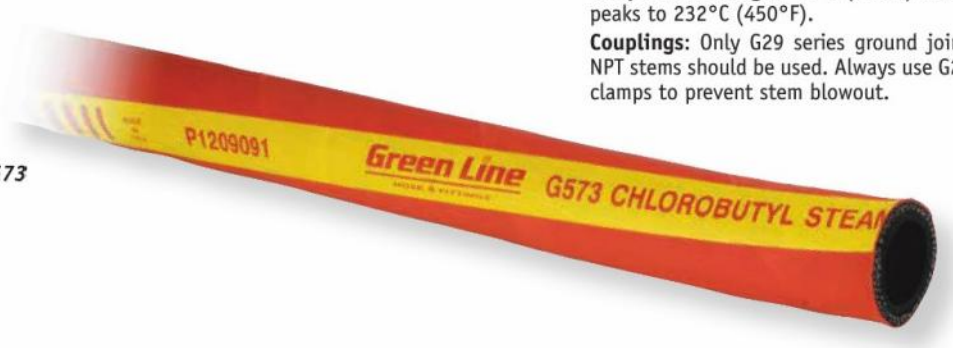

G573

I.D.	Part Number	O.D.	Working Pressure	Weight per ft	Standard Length	
¾"	G573-075	1.22"	250 psi	0.45 lb	50 or 100 ft	See Prices Online
1	G573-100	1.46	250	0.61	50 or 100	
2	G573-200	2.56	250	1.44	50 or 100	

Clamp Selection Chart:	
Hose Part No.	**Clamp Part No.**
G573-075	G29C-075A
G573-100	G29C-100AA
G573-200	G29C-200A

For popular steam hose assemblies see page 58.

STEAM HOSE

Weld



G571MM



G571FF

STEAM HOSE ASSEMBLIES

Steam hoses are supplied with G29C interlocking clamps for secure fitting retention. Fittings are generally G29 ground joint style stems with wing nuts or G23S male pipe stems. These fittings all have collars on the barb to interlock with the G29C clamp. For crimped steam hose assemblies, Green Line offers our G571 product line complete with NPT or G29 Crimpable Ground Joint fittings.

Hose size	Thread size	Length (ft)	Part Number	Weight Each (lb)	
G571 Assemblies with Crimped Fittings					
3/4"	3/4" NPT	50	G571-075MM50	23	
3/4	1 NPT	50	G571-075M16M50	24	
1	1 NPT	50	G571-100MM50	27	
2	2 NPT	50	G571-200MM50	79	See Prices Online
3/4	G29 Ground Joint	50	G571-075FF50	24	
1	G29 Ground Joint	50	G571-100FF50	28	
2	G29 Ground Joint	50	G571-200FF50	86	



G572MM



G572FF

G572 Assemblies with Clamped Fittings					
3/4	3/4 NPT	50	G572-075MM50	25	
3/4	1 NPT	50	G572-075M16M50	25	
1	1 NPT	50	G572-100MM50	35	
2	2 NPT	50	G572-200MM50	85	See Prices Online
3/4	G29 Ground Joint	50	G572-075FF50	26	
1	G29 Ground Joint	50	G572-100FF50	36	
2	G29 Ground Joint	50	G572-200FF50	88	



G573MM



G573FF

G573 Assemblies with Clamped Fittings					
3/4	3/4 NPT	50	G573-075MM50	25	
3/4	1 NPT	50	G573-075M16M50	25	
1	1 NPT	50	G573-100MM50	35	
2	2 NPT	50	G573-200MM50	85	See Prices Online
3/4	G29 Ground Joint	50	G573-075FF50	26	
1	G29 Ground Joint	50	G573-100FF50	36	
2	G29 Ground Joint	50	G573-200FF50	88	

Legend® DSL Series
Dual Splash Lubrication

Positive Displacement Blowers
& Vacuum Pumps



GARDNER DENVER
1859 2009
SESQUICENTENNIAL

GD
GARDNER DENVER
Experience Proven Results

Sutorbilt® Legend® DSL Series

Gardner Denver

– Tradition

– Quality

– Innovation

– Results



Sutorbilt Legend DSL

Improving a great, trusted and proven product was the challenge. The Legend DSL integrates proven experience with world-class blower design and manufacturing to create a product worthy of the name “Legend.”

Quality + Tradition = Trust

- Tradition: 150 years of quality manufacturing with proven results
- Every Legend DSL is manufactured in our ISO 9001 certified facility in Sedalia, Missouri
- Each Legend DSL is individually tested to meet rigorous performance specifications
- Superior and consistent quality can be found in each Legend DSL as a result of:
  - Continual investment in the training of world-class manufacturing personnel
  - Quality inspections throughout the entire manufacturing process
- Requested by leading Original Equipment Manufacturers (OEMs) worldwide for a wide range of applications
- A Legend is at the heart of an ever-expanding variety of air solutions working every minute of every day
- Supported by a worldwide network of experienced and trusted sales and service professionals
- Quiet Series available with reduced noise up to 5 dBA
- The Legend DSL Warranty
  - **30 months** from the date of shipment or
  - **24 months** from the date of installation, whichever occurs first

Experience Proven Results
with the Legend DSL

Legend DSL Provides

– Pressure to 15 psig

– Vacuum to 16" Hg

– Airflow to 950 cfm

– 24/30 Warranty

Innovation

- Refined timing and locking device incorporates frictional keyless shaft gear locking rings
  - Improves blower life with more resistance to slipped timing
  - Allows for easier maintenance
- Spherical roller bearing on drive shaft (4–6" gear diameters only)
  - Provides greater allowance for misaligned drives, and improves longevity

Results

- Drop-in replacement for current Legend products
- Operating temperatures which can be up to 15°F cooler compared to leading competitive brands
- Greater durability with an increased capacity for overhung load by as much as 30%
- Unmatched strength and rigidity from increased mass, which can be up to 37% more than leading competitive brands
- Universal mounting feet allows for easy field conversion

Advanced Engineering Capabilities

Finite Element Analysis (FEA) – thermal analysis

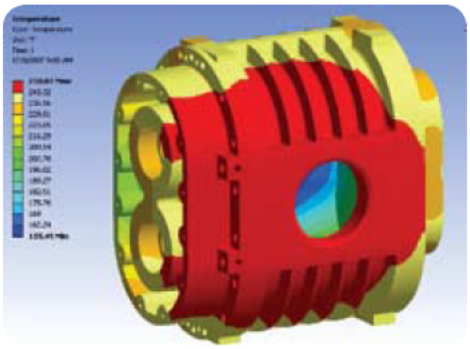

Figure 1 – Previous design was developed without the benefit of FEA thermal analysis.

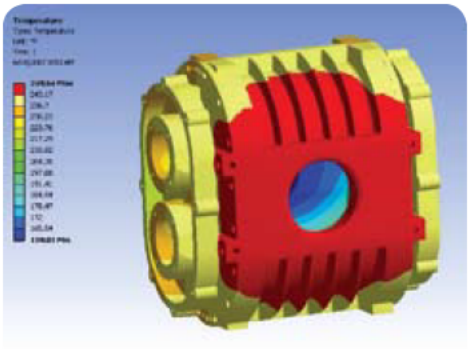

Figure 2 – With FEA thermal analysis, a good design was made great.

- Innovative bearing housing design with air gaps reduce drive end sump temperatures which can be up to 15°F, extending lubricant, bearing, and blower life

Legendary DSL Design Features & Benefits



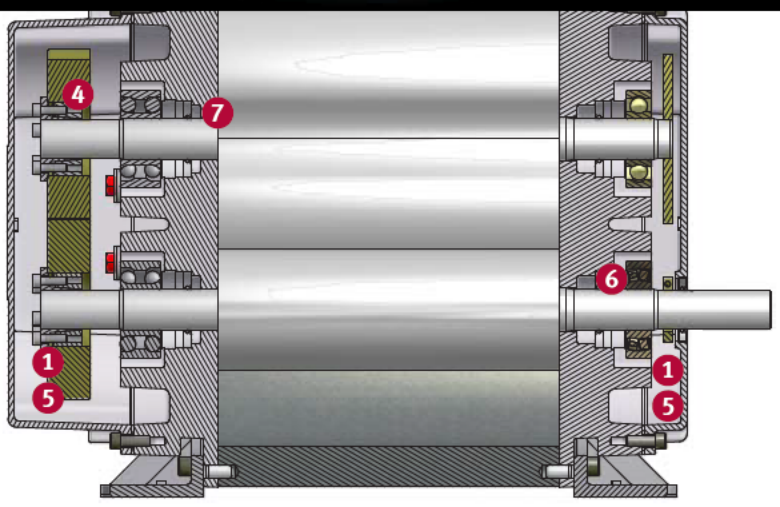

1. Dual Splash Lubrication

- Reliable splash lubrication on both gear and drive ends for longer product life
- One-piece slingers are securely clamped on both shafts to ensure efficient lubrication, and allow installation flexibility



2. Single Piece Cylinder Provides Greater Strength & Rigidity

- Heavy-duty reinforced cast iron cylinder retains internal clearance
- DSL design utilizes the existing Legend cylinder and rotors with proven results

3. Universal Feet

- Drop-in replacement for current Legend design
- Reduce inventory and provide installation flexibility
- One set of feet for vertical and horizontal configurations

4. Improved Timing= Improved Reliability



- Grip rings expand against the bore and compress on the shaft for a secure, mechanical shrink fit
- Replaces pinning of timing gears
- Easier and more cost effective to teardown and rebuild

5. Larger Sump Capacities = Cooler Running Bearings

- Sump capacity is increased as much as 30% on drive end and 62% on gear end over leading competition

6. Greater Overhung Load Capacity Increases Blower Life

- Improving overhung load capabilities by as much as 30%
- Belt drive capabilities are independent of blower/motor orientation for improved packaging options
- Spherical roller drive bearing provides better misalignment capabilities (4–6" gear diameter)
- Cylindrical drive bearing on 3" gear diameter

7. High Temperature Viton® Oil Seals

- Maximize the seal life in continuous, severe-duty applications to provide leak-free operation

8. Site Glasses

- Installed on side of unit and can be readily converted in the field

9–10. Cooler Operating Temperatures Increases Blower Life



- Integral ribs (9) improve heat dissipation and performance
- Engineered air gap (10) to isolate the oil sumps from hot air
- Engineered lubrication channels ensure ample lubrication reaches critical components

Robust Design Improves Performance & Efficiency

- Additional weight provides more rigidity to the blower allowing greater efficiency and tighter clearances
- The Legend DSL weights are greater than leading competitive brands which can be up to 37% heavier

Mechanical Gas Seals

- The Legend DSL design accommodates mechanical gas seals for critical gas applications

LOW PRESSURE

SIZE	DIA. INLET & OUTLET	DISPL. CU. FT./ REV.	RPM	2 PSIG		3 PSIG		4 PSIG		5 PSIG		6 PSIG		7 PSIG	
				CFM	BHP	CFM	BHP	CFM	BHP	CFM	BHP	CFM	BHP	CFM	BHP
3L 3LV	2½"-S	0.104	1,760	149	1.9	142	2.8	135	3.7	130	4.5	124	5.2	120	6.1
			2,265	202	2.4	194	3.5	188	4.7	182	5.6	177	6.7	172	7.8
			2,770	254	2.9	247	4.3	240	5.5	235	6.8	230	8.2	225	9.6
			3,600	341	3.7	333	5.3	327	7.1	321	8.9	316	10.6	311	12.4
4L 4LV	3"-S	.170	1,760	253	3.0	243	4.5	234	5.7	227	7.1	220	8.5	213	9.9
			2,190	326	3.7	316	5.3	307	7.1	300	8.8	293	10.6	286	12.4
			2,620	400	4.4	389	6.3	381	8.4	373	10.6	366	12.7	360	14.8
			3,600	566	5.8	556	8.7	547	11.6	539	14.5	533	17.4	526	20.3
5L 5LV	4"-S	.350	1,500	463	5.2	449	7.5	438	10.0	427	12.4	418	14.9	409	17.4
			1,760	554	5.8	540	8.8	529	11.7	518	14.6	509	17.5	500	20.4
			2,100	673	7.0	659	10.5	648	13.9	637	17.4	628	20.9	619	24.4
			2,850	936	9.5	922	14.2	910	18.9	900	23.6	890	28.4	882	33.1
6L 6LV	6"-F	.718	1,170	739	8.0	716	11.9	697	15.9	680	19.9	664	23.9	650	27.9
			1,760	1,162	12.0	1,139	18.0	1,120	24.0	1,103	29.9	1,088	35.9	1,074	41.9
			1,930	1,284	13.1	1,261	19.7	1,242	26.3	1,225	32.8	1,210	39.4	1,196	46.0
			2,350	1,586	16.0	1,563	24.0	1,544	32.0	1,527	40.0	1,512	48.0	1,497	56.0

MEDIUM PRESSURE

SIZE	DIA.INLET & OUTLET	DISPL.CU. FT./REV.	RPM	7 PSIG		9 PSIG		10 PSIG		12 PSIG		13 PSIG		14 PSIG	
				CFM	BHP	CFM	BHP	CFM	BHP	CFM	BHP	CFM	BHP	CFM	BHP
3M 3MV	2"-S	0.060	1,760	64	3.6	59	4.6								
			2,265	95	4.6	89	5.8	87	6.4						
			2,770	125	5.5	119	7.1	117	7.9	112	9.5				
			3,600	175	7.2	169	9.2	167	10.2	162	12.3				
4M 4MV	2½"-S	.117	1,760	144	6.8	136	8.8	132	9.8						
			2,190	194	8.5	186	10.9	182	12.1						
			2,620	245	10.2	236	13.1	233	14.5						
			3,600	359	14.0	351	18.0	347	20.0						
5M 5MV	4"-S	.210	1,500	237	10.5	227	13.4	222	14.9	213	17.9	209	19.4		
			1,760	292	12.3	281	15.8	277	17.5	268	21.0	263	22.8		
			2,100	363	14.6	353	18.8	348	20.9	339	25.1	335	27.2		
			2,850	521	19.9	510	25.5	506	28.4	497	34.0	493	36.9		
6M 6MV	5"-S	.383	1,170	332	14.9	316	19.1	309	21.2	296	25.5	289	27.6	283	29.7
			1,760	558	22.4	542	28.8	535	32.0	522	38.3	515	41.5	509	44.7
			1,930	622	24.5	607	31.5	600	35.0	587	42.0	580	45.5	574	49.1
			2,350	784	29.9	768	38.4	761	42.7	748	51.2	741	55.5	735	59.7

HIGH PRESSURE

SIZE	DIA. INLET & OUTLET	DISPL. CU. FT./REV.	RPM	7 PSIG		8 PSIG		9 PSIG		11 PSIG		13 PSIG		15 PSIG	
				CFM	BHP	CFM	BHP	CFM	BHP	CFM	BHP	CFM	BHP	CFM	BHP
3H 3HV	1¼"-S	0.045	1,760	46	2.6	44	3.0	41	3.4						
			2,265	69	3.4	66	3.9	64	4.3	60	5.3				
			2,770	91	4.1	89	4.7	87	5.3	83	6.5				
			3,600	129	5.4	126	6.1	124	6.9	120	8.4	117	10.0	113	11.5
4H 4HV	1½"-S	.069	1,760	80	4.0	77	4.6	74	5.2						
			2,190	110	5.0	107	5.7	104	6.4	99	7.9				
			2,620	139	6.0	137	6.9	134	7.7	129	9.4	124	11.1		
			3,600	207	8.2	204	9.4	201	10.6	196	13.0	192	15.3	188	17.7
5H 5HV	2½"-S	.140	1,500	154	7.0	151	8.0	147	9.0	140	10.9				
			1,760	191	8.2	187	9.3	183	10.5	177	12.8	171	15.2	165	17.5
			2,100	238	9.8	235	11.1	231	12.5	224	15.3	218	18.1	213	20.9
			2,850	343	13.2	340	15.1	336	17.0	329	20.8	323	24.6	318	28.4
6H 6HV	3"-S	.227	1,170	188	8.8	182	10.1	177	11.3	168	13.8	159	16.4		
			1,760	321	13.3	316	15.1	311	17.0	302	20.8	293	24.6	285	28.4
			1,930	360	14.5	355	16.6	350	18.7	340	22.8	332	27.0	324	31.1
			2,350	455	17.7	450	20.2	445	22.8	436	27.8	427	32.9	419	37.9

LOW VACUUM

SIZE	DIA. INLET & OUTLET	DISPL. CU. FT./REV.	RPM	2 "Hg		4 "Hg		8 "Hg		10 "Hg		12 "Hg		14 "Hg	
				CFM	BHP	CFM	BHP	CFM	BHP	CFM	BHP	CFM	BHP	CFM	BHP
3L 3LV	2½"-S	0.104	1,760	158	1.1	147	1.9	128	3.6	118	4.5	108	5.1		
			2,265	211	1.3	200	2.4	180	4.6	171	5.5	160	6.6		
			2,770	264	1.5	252	2.9	233	5.4	223	6.7	213	8.1		
			3,600	350	1.9	338	3.7	319	7.0	309	8.7	299	10.5	288	12.2
4L 4LV	3"-S	.170	1,760	266	1.6	250	3.0	224	5.6	211	7.0	197	8.4		
			2,190	339	1.9	323	3.7	297	6.9	284	8.7	270	10.4		
			2,620	412	2.3	396	4.3	370	8.3	357	10.4	343	12.4	329	14.5
			3,600	579	3.1	563	5.7	537	11.4	524	14.3	510	17.1	495	20.0
5L 5LV	4"-S	.350	1,500	480	2.6	459	5.1	424	9.8	406	12.2	388	14.7		
			1,760	571	3.1	550	5.7	515	11.5	497	14.3	479	17.2	459	20.1
			2,100	690	3.6	669	6.8	634	13.7	616	17.1	598	20.5	578	24.0
			2,850	953	4.8	932	9.3	896	18.6	879	23.2	860	27.9	840	32.5
6L 6LV	6"-F	.718	1,170	766	4.1	732	7.8	674	15.7	645	19.6	615	23.5		
			1,760	1,190	5.9	1,115	11.8	1,097	23.5	1,068	29.4	1,038	35.3	1,005	41.2
			1,930	1,312	6.5	1,278	12.9	1,219	25.8	1,191	32.3	1,160	38.7	1,127	45.2
			2,350	1,614	7.9	1,579	15.7	1,521	31.4	1,492	39.3	1,462	47.2	1,429	55.0

MEDIUM VACUUM

SIZE	DIA. INLET &OUTLET	DISPL. CU. FT./REV.	RPM	6 "Hg		10 "Hg		12 "Hg		14 "Hg		15 "Hg		16 "Hg	
				CFM	BHP	CFM	BHP	CFM	BHP	CFM	BHP	CFM	BHP	CFM	BHP
3M 3MV	2"-S	0.060	1,760	76	1.6	63	2.6	57	3.1						
			2,265	106	2.0	93	3.3	87	3.9						
			2,770	136	2.4	124	4.0	117	4.7	110	5.4				
			3,600	186	3.1	174	5.0	167	6.0	160	7.0	156	7.5		
4M 4MV	2½"-S	.117	1,760	161	3.0	142	4.9	132	5.8						
			2,190	211	3.7	193	6.0	183	7.2						
			2,620	262	4.4	243	7.1	233	8.6	222	10.0				
			3,600	376	5.9	358	9.8	348	11.8	337	13.7	331	14.7	325	15.7
5M 5MV	4"-S	.210	1,500	258	4.5	235	7.3	223	8.8	209	10.3				
			1,760	313	5.2	290	8.6	277	10.3	264	12.1				
			2,100	384	6.2	361	10.3	349	12.3	335	14.4	328	15.4		
			2,850	542	8.4	519	13.9	506	16.7	493	19.5	485	20.9	477	22.3
6M 6MV	5"-S	.383	1,170	363	6.3	328	10.4	310	12.5	290	14.6	279	15.7	267	16.7
			1,760	589	9.4	554	15.7	536	18.8	516	22.0	505	23.5	493	25.1
			1,930	655	10.3	619	17.2	601	20.7	581	24.1	570	25.8	558	27.5
			2,350	815	12.6	780	21.0	762	25.2	741	29.3	731	31.4	719	33.5

HIGH VACUUM

SIZE	DIA. INLET & OUTLET	DISPL. CU. FT./REV.	RPM	6 "Hg		8 "Hg		12 "Hg		14 "Hg		15 "Hg		16 "Hg	
				CFM	BHP	CFM	BHP	CFM	BHP	CFM	BHP	CFM	BHP	CFM	BHP
3H 3HV	1¼"-S	0.045	1,760	55	1.1	50	1.5	40	2.2						
			2,265	78	1.4	73	1.9	62	2.8						
			2,770	100	1.7	95	2.3	85	3.5	79	4.1	76	4.4		
			3,600	138	2.3	133	3.0	122	4.5	117	5.3	113	5.7	110	6.0
4H 4HV	1½"-S	.069	1,760	91	1.7	85	2.3	72	3.4						
			2,190	121	2.1	115	2.8	102	4.2	95	4.9	105	5.8		
			2,620	151	2.5	144	3.4	132	5.1	124	5.9	120	6.3		
			3,600	218	3.5	212	4.6	199	6.9	192	8.1	188	8.7	184	9.3
5H 5HV	2½"-S	.140	1,500	170	2.9	161	3.9	144	5.9	134	6.8				
			1,760	206	3.4	198	4.6	180	6.9	171	8.0	165	8.6		
			2,100	254	4.1	245	5.5	228	8.2	218	9.6	213	10.3		
			2,850	359	5.6	350	7.4	333	11.2	323	13.0	318	14.0	312	14.9
6H 6HV	3"-S	.227	1,170	209	3.7	197	4.8	173	7.4	159	8.7	152	9.3		
			1,760	343	5.6	331	7.4	307	11.2	293	13.0	286	14.0	278	14.9
			1,930	381	6.1	370	8.2	345	12.2	332	14.3	325	15.3	317	16.3
			2,350	477	7.5	165	9.9	441	14.9	427	17.4	420	18.6	412	19.9

Performance based on inlet air at standard temperature of 68˚F, an ambient pressure of 14.7 psia and 36% relative humidity.
For performance at non-standard conditions, contact your authorized Gardner Denver representative.

Dimensional Data — Horizontal Configurations

SIZE	WT.	CONN.	A	B	C	D	E	F	G	H	J	K	L	M	N	O	P	R	S	T	U
3H	71	S	6.75	2.69	2.69	7.75	3.88	5.00	3.50	8.88	11.26	1.25	5.86	12.05	3.50	1.78	1.63	0.19	0.75	0.25	.62 x 1.12
3M	79	S	7.62	3.13	2.69	7.75	3.88	5.00	3.50	8.88	11.26	2.00	6.30	12.92	4.36	1.78	1.63	0.19	0.75	0.25	.62 x 1.12
3L	95	S	10.24	4.44	2.69	7.75	3.88	5.00	3.50	8.88	11.26	2.5	7.61	15.55	7.00	1.78	1.63	0.19	0.75	0.25	.62 x 1.12
4H	98	S	7.25	3	3	8.25	4.19	6.25	4	10.44	12.38	1.5	6.88	13.75	4	2.38	1.81	.19	.875	.38	.5 x .75
4M	117	S	9.5	4.13	3	8.25	4.19	6.25	4	10.44	12.38	2.5	8	16	6.25	2.38	1.81	.19	.875	.38	.5 x .75
4L	142	S	12	5.38	3	8.25	4.19	6.25	4	10.44	12.38	3	9.25	18.5	8.75	2.38	1.81	.19	.875	.38	.5 x .75
5H	196	S	10.88	3.5	3.5	9	5.19	7	5	12.19	15.38	2.5	8.19	16.38	4.88	2.5	2	.25	1.125	.38	.5625 x .75
5M	215	S	12.88	4.5	3.5	9	5.19	7	5	12.19	15.38	4	9.19	18.38	6.88	2.5	2	.25	1.125	.38	.5625 x .75
5L	255	S	16.88	6.5	3.5	9	5.19	7	5	12.19	15.38	4	11.19	22.38	10.88	2.5	2	.25	1.125	.38	.5625 x .75
6H	329	S	9.75	3.94	4	16.5	6	8.75	6	14.75	18	3	9.19	18.63	5.75	2.94	2	.31	1.375	.5	.75 x 1
6M	377	S	13	5.56	4	16.5	6.19	8.75	6	14.94	18	5	10.81	21.88	9	2.94	2	.31	1.375	.5	.75 x 1
6L	549	F	20	9.06	4	16.5	7.5	8.75	6	16.25	18	6	14.31	28.88	16	2.94	2	.31	1.375	.5	.75 x 1

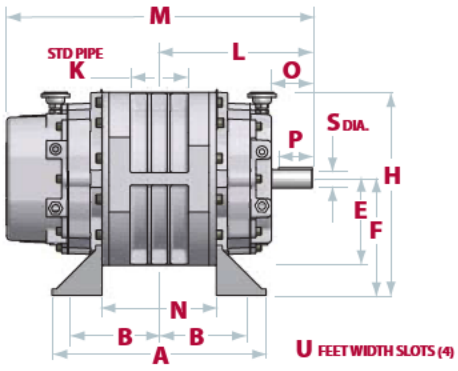

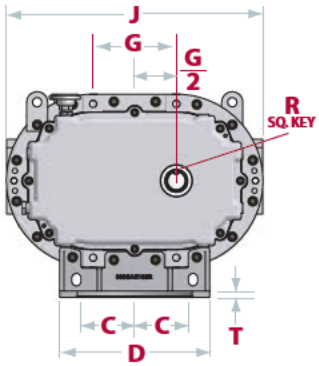



LHC
LEFT HAND
(OPTIONAL ASSEMBLY)



RHC
RIGHT HAND
(STANDARD ASSEMBLY)
CENTER TIMED FOR ROTATION
IN EITHER DIRECTION

Dimensional Data — Vertical Configurations

SIZE	WT.	CONN.	A	B	C	D	E	F	G	H	J	K	L	M	N	O	P	R	S	T	U
3H	71	S	6.75	2.69	2.69	7.75	4.50	6.25	8.00	11.88	7.75	1.25	5.86	12.05	3.5	1.78	1.63	0.19	.75	0.25	.62 x 1.12
3M	79	S	7.62	3.13	2.69	7.75	4.50	6.25	8.00	11.88	7.75	2.00	6.30	12.92	4.36	1.78	1.63	0.19	.75	0.25	.62 x 1.12
3L	95	S	10.24	4.44	2.69	7.75	4.50	6.25	8.00	11.88	7.75	2.50	7.61	15.55	7.00	1.78	1.63	0.19	.75	0.25	.62 x 1.12
4H	98	S	7.25	3	3	8.25	4.5	6.5	8.5	12.69	8.38	1.5	6.88	13.75	4	2.38	1.81	.19	.875	.38	.5 x .75
4M	117	S	9.5	4.13	3	8.25	4.5	6.5	8.5	12.69	8.38	2.5	8	16	6.25	2.38	1.81	.19	.875	.38	.5 x .75
4L	142	S	12	5.38	3	8.25	4.5	6.5	8.5	12.69	8.38	3	9.25	18.5	8.75	2.38	1.81	.19	.875	.38	.5 x .75
5H	196	S	10.88	3.5	3.5	9	5.5	8	10.5	15.88	10.38	2.5	8.19	16.38	4.88	2.5	2	.25	1.125	.38	.5625 x .75
5M	215	S	12.88	4.5	3.5	9	5.5	8	10.5	15.88	10.38	4	9.19	18.38	6.88	2.5	2	.25	1.125	.38	.5625 x .75
5L	255	S	16.88	6.5	3.5	9	5.5	8	10.5	15.88	10.38	4	11.19	22.38	10.88	2.5	2	.25	1.125	.38	.5625 x .75
6H	329	S	9.75	3.94	4	10.5	8.75	11.75	14.75	20.75	12	3	9.19	18.63	5.75	2.94	2	.31	1.375	.5	.75 x 1
6M	377	S	13	5.56	4	10.5	8.75	11.75	14.75	20.75	12.38	5	10.81	21.88	9	2.94	2	.31	1.375	.31	.75 x 1
6L	549	F	20	9.06	4	10.5	8.75	11.75	14.75	20.75	15	6	14.31	28.88	16	2.94	2	.31	1.375	.31	.75 x 1

S = Threaded connections standard NPT. F = flange connections. Inlet and outlet connections are the same type and size.
Dimensions are in inches. Weights are in pounds and are approximate.

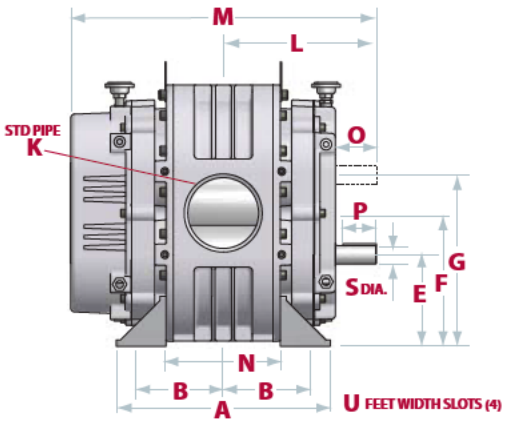

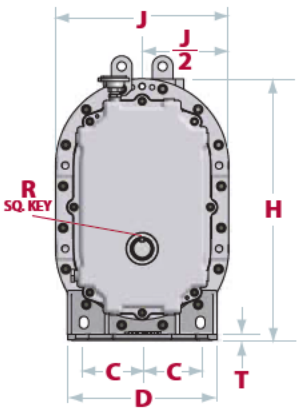

THC
TOP HAND
(OPTIONAL ASSEMBLY)



BHC
BOTTOM HAND
(STANDARD ASSEMBLY)
CENTER TIMED FOR ROTATION
IN EITHER DIRECTION



Genuine Gardner Denver Parts & Lubricants



- Maintain the Gardner Denver performance advantage and reliability with Genuine GD Replacement Parts available through authorized sales and service representatives
- Protect your Gardner Denver investment with AEON® PD, the only lubricant specially formulated for all blowers in any environment
  - **Now available:**
    - **›› AEON® PD-XD (eXtreme Duty)**
    - **›› Designed specifically for high ambient and high discharge temperature applications**
  - Also available:
    - ›› AEON® PD (standard applications)
    - ›› AEON® PD-FG (Food Grade)

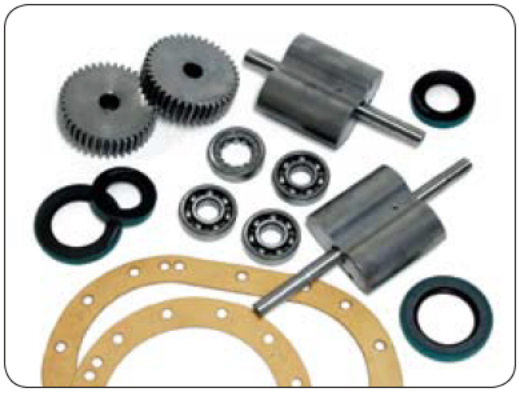

Quality Promise

- Gardner Denver industrial blowers are manufactured under rigid ISO 9001 quality standards
- All models are thoroughly tested to meet the highest performance standards for unequaled service life under the most severe operating conditions



Gardner Denver®

ENERGY STAR PARTNER

GARDNER DENVER ISO 9001 CERTIFIED QUALITY SYSTEM

Member CAGI

Please recycle after use.

www.GardnerDenverProducts.com pd.blowers@gardnerdenver.com

Gardner Denver, Inc. 1800 Gardner Expressway, Quincy, IL 62305
Customer Service Department Telephone: (800) 682-9868 FAX: (217) 221-8780

©2009 Gardner Denver, Inc. Litho in U.S.A. PD-SBL-DSL 3rd Ed. 5/09

PRODUCT DATA

VFV SERIES FILTERS

VGACs (Vapor Granular Activated Carbon)

VFV series filters are designed to treat vapor streams in a wide variety of adsorption applications. The modular design enables the units to easily fit into a wide variety of installations. Standard features include steel construction with epoxy internal coating, efficient internal distributor array, forklift skid and lifting eyes.

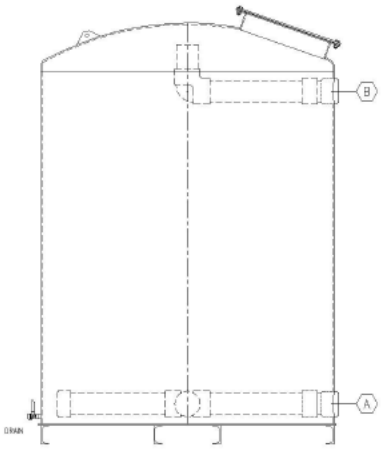

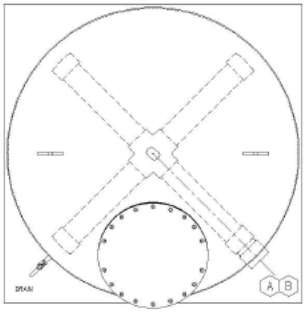

A - Process Inlet
B - Process Outlet
C - Drain
Manway standard size 18" Round



Standard Model Shown - Detailed Submittal Drawings Available

VFV SERIES STANDARD SPECIFICATIONS

Model Number	VFV-250	VFV-500	VFV-1000	VFV-2000	VFV-3000	VFV-5000	VFV-10000
Overall Height	3'11"	5'3"	6'5"	7'7"	7'10"	9'0"	9'4"
Diameter	24"	30"	36"	48"	60"	72"	96"
Process Connection	2" FNPT	2" FNPT	3" FNPT	4" FNPT	4" FNPT	6" FNPT	6" FNPT
Typical GAC Fill (28#/FT³)	250 Lbs	500 Lbs	1,000 Lbs	2,000 Lbs	3,000 Lbs	5,000 Lbs	10,000 Lbs
Shipping Weight (empty)	165 Lbs	375 Lbs	500 Lbs	925 Lbs	1,375 Lbs	2,300 Lbs	3,150 Lbs
Operational Weight	500 Lbs	1,050 Lbs	1,800 Lbs	3,500 Lbs	5,250 Lbs	8,750 Lbs	15,800 Lbs
Air flows for standard conditions	30 to 180 CFM	50 to 300 CFM	70 to 420 CFM	125 to 750 CFM	200 to 1200 CFM	280 to 1680 CFM	500 to 3000 CFM
Available Bed Volume	9 FT³	19.5 FT³	35 FT³	75 FT³	117 FT³	196 FT³	400 FT³
Maximum Pressure	10 PSIG	10 PSIG	10 PSIG	10 PSIG	10 PSIG	10 PSIG	10 PSIG
Maximum Vacuum	28" Hg	28" Hg	28" Hg	28" Hg	28" Hg	28" Hg	28" Hg

Revised March 2015

Victaulic OGS-200 Roll Groove Specifications for IPS and Metric Steel Pipe

1.0 DIMENSIONS

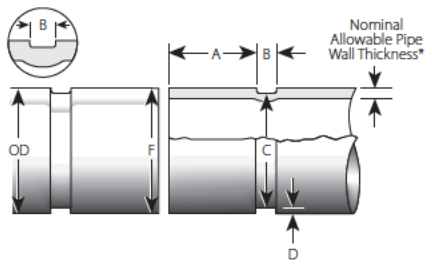

Nominal Size	Pipe Outside Diameter[1]			Gasket Seat "A"[2]	Groove Width "B"[3]	Groove Diameter "C"[4]		Groove Depth "D"[5] (ref.)	Max. Allow. Flare Diameter "F"[6]
		Tolerance			±0.010				
inches DN	Actual inches mm	Max inches mm	Min inches mm	inches mm	inches ±0.25 mm	Max inches mm	Min inches mm	inches mm	inches mm
2 DN50	2.375 60.3	2.399 60.9	2.351 59.7	1.000 ±0.031 25.40 ±0.79	0.344 ±0.010 8.74 ±0.25	2.250 57.2	2.235 56.8	0.063 1.6	2.404 61.1
2½	2.875 73.0	2.904 73.8	2.846 72.3			2.720 69.1	2.702 68.6	0.078 2.0	2.909 73.9
DN65	3.000 76.1	3.030 77.0	2.970 75.4			2.845 72.3	2.827 81.8	0.078 2.0	3.035 77.1
3 DN80	3.500 88.9	3.535 89.8	3.469 88.1			3.344 84.9	3.326 84.5	0.078 2.0	3.540 89.9
4 DN100	4.500 114.3	4.545 115.4	4.469 113.5	1.125 ±0.031/-0.063 28.58 ±0.79/-1.60		4.334 110.1	4.314 109.6	0.083 2.1	4.575 116.2
DN125	5.500 139.7	5.556 141.1	5.469 138.9			5.334 135.5	5.314 135.0	0.083 2.1	5.586 141.9
	6.500 165.1	6.563 166.7	6.469 164.3			6.330 160.8	6.308 160.2	0.085 2.2	6.593 167.5
6 DN150	6.625 168.3	6.688 169.9	6.594 167.5			6.455 164.0	6.433 163.4	0.085 2.2	6.718 170.6
8 DN200	8.625 219.1	8.688 220.7	8.594 218.3	1.250 +.031/-.063 31.75 +0.79/-1.60	0.469 11.9	8.441 214.4	8.416 213.8	0.092 2.3	8.698 220.8

1 **Outside diameter**: The outside diameter of roll grooved pipe shall not vary more than the tolerance listed. For IPS pipe, the maximum allowable tolerance from square cut ends is 0.032"/0.81 mm for 2 – 3"/DN50 – DN80; and 0.063"/1.60 mm for 4 – 8"/DN100 – DN200, measured from true square line.

2 **Gasket seat "A"**: The pipe surface shall be free from indentations, roll marks and projections from the end of the pipe to the groove to provide a leak-tight seal for the gasket. All loose paint, scale, dirt, chips, grease and rust must be removed. It continues to be Victaulic's first recommendation that pipe be square cut. When using beveled end pipe, the gasket seat "A" is measured from the end of the pipe. IMPORTANT: Roll grooving of beveled end pipe may result in unacceptable pipe end flare. See Maximum Allowable Flare Diameter column.

3 **Groove width "B"**: Bottom of groove to be free of loose dirt, chips, rust and scale that may interfere with proper coupling assembling.

4 **Groove diameter "C"**: The groove must be of uniform depth for the entire pipe circumference. Groove must be maintained within the "C" diameter tolerance listed.

5 **Groove depth "D"**: For reference only. Groove must conform to the groove diameter "C" listed.

6 **Maximum allowable pipe end flare diameter "F"**: Measured at the most extreme pipe end diameter square cut or beveled.

NOTES

- Do not apply coatings to the gasket seat "A" nor within the groove width "B" on the pipe exterior.
- Any corrective action to gasket seat "A" to provide a good sealing surface as required in footnote #2 (listed above) must not result in file, grind or sand marks going across gasket seat "A."
- Roll grooving removes no metal, cold forming a groove by the action of an outer grooving roll being forced into pipe as it is rotated by an inner support roll.
- For use on Schedules 40 and 80 carbon steel pipe; metric carbon steel pipe of equivalent thickness per EN 10216-2 P265GH and EN 10217-1 P265TR1/P265TR2; thin wall metric carbon steel pipe per EN 10216-1 P235TR1; and Schedule 40S stainless steel pipe per ASTM A312 Grade TP316 as specified in publication 100.02: Victaulic High Performance Rigid Coupling: Style 870.

ALWAYS REFER TO ANY NOTIFICATIONS AT THE END OF THIS DOCUMENT REGARDING PRODUCT INSTALLATION, MAINTENANCE OR SUPPORT.

System No.		Location	
Submitted By		Date	

Spec Section		Paragraph	
Approved		Date	

© 2020 Victaulic Company. All rights reserved.

2.0 GROOVING

Tools Recommended for OGS-200 Roll Sets

Carbon Steel Pipe: Schedules 40 & 80 and Metric Pipe of Equivalent Thickness, and Thin Wall Metric Pipe[7]

Pipe Material		VE272SFS VE270FSD VE268 inches DN	Part Number	VE416FSD inches DN	Part Number	VE460 inches DN	Part Number
Carbon Steel	Schedule 40	2 – 3 DN50 – DN80	R9S2268003	4 – 6 DN100 – DN150	R9S4416006	8 DN200	R9QS460008
		4 – 6 DN100 – DN150	R9S4268006				
	Schedule 80	2 – 3 DN50 – DN80	R9S2268003	4 – 6 DN100 – DN150	R9S4416006	8 DN200	R9QS460008

Stainless Steel Pipe: Schedule 40

Pipe Material		VE272SFS VE270FSD VE268 inches DN	Part Number	VE416FSD inches DN	Part Number	VE460 inches DN	Part Number
Stainless Steel	Schedule 40	2 – 3 DN50 – DN80	RXS2268003	4 – 6 DN100 – DN150	RXS4416006	8 DN200	RXS8460008
		4 – 6 DN100 – DN150	RXS4268006				

[7] As specified in publication 100.02: Victaulic High Performance Rigid Coupling: Style 870

NOTES

- Victaulic R9S roll sets must be used when grooving Schedules 40 and 80 carbon steel pipe; metric carbon steel pipe of equivalent thickness and thin wall metric carbon steel pipe to Victaulic OGS-200 groove specifications. Victaulic R9S roll sets must be ordered separately. They are identified by the designation "R9S" on the front of the roll set, as well as a red color stripe on both the upper and lower roll.
- Victaulic RXS roll sets must be used when grooving schedule 40 stainless steel pipe to Victaulic OGS-200 groove specifications. Victaulic RXS roll sets must be ordered separately. They are identified by the designation "RXS" on the front of the roll set, as well as a red color stripe on both the upper and lower roll.

Model RG1200 Maximum Pipe Size and Wall Thickness Capacity

Model	Pipe Material	Pipe Size inches DN				
		2 DN50	2½	3 DN80	4 DN100	6 DN150
RG1200	Carbon Steel	Schedule 40 - 80 3.91 - 7.62 mm			Schedule 40 6.02 - 7.11 mm	

Model RG1210 Maximum Pipe Size and Wall Thickness Capacity

Model	Pipe Material	Pipe Size inches DN								
		2 50	2½	76.1 mm	3 80	4 100	139.7 mm	6 150	165.1 mm	8 200
RG1210	Carbon steel	Sch. 40 – 80 3.9 – 8.6 mm					Sch. 40 6.0 – 8.2 mm			

 © 2020 Victaulic Company. All rights reserved.

3.0 REFERENCE MATERIALS

05.10: Victaulic Chemical Compatibility Guide for the Style 870 High Performance Rigid Coupling Seal Assembly
24.01: Victaulic Pipe Preparation Tools
24.11: Victaulic In-Place OGS-200 Roll Grooving Tool Model RG1200
24.14: Victaulic OGS-200 Roll Grooving Tool Model RG1210
100.01: Victaulic OGS-200 Grooved End Fittings
100.02: Victaulic Rigid Coupling Style 870
100.12: Victaulic Gate Valve Series 871
100.13: Victaulic Flexible Loop for Steam Series 159
I-870 Installation Instructions Style 870 Rigid Coupling
TM-RG1200: Victaulic Operating and Maintenance Instructions Manual RG1200 Roll Grooving Tool
TM-RG1210: Victaulic Operating and Maintenance Instructions Manual RG1210 Roll Grooving Tool

User Responsibility for Product Selection and Suitability
Each user bears final responsibility for making a determination as to the suitability of Victaulic products for a particular end-use application, in accordance with industry standards and project specifications, as well as Victaulic performance, maintenance, safety, and warning instructions. Nothing in this or any other document, nor any verbal recommendation, advice, or opinion from any Victaulic employee, shall be deemed to alter, vary, supersede, or waive any provision of Victaulic Company's standard conditions of sale, installation guide, or this disclaimer.

Intellectual Property Rights
No statement contained herein concerning a possible or suggested use of any material, product, service, or design is intended, or should be constructed, to grant any license under any patent or other intellectual property right of Victaulic or any of its subsidiaries or affiliates covering such use or design, or as a recommendation for the use of such material, product, service, or design in the infringement of any patent or other intellectual property right. The terms "Patented" or "Patent Pending" refer to design or utility patents or patent applications for articles and/or methods of use in the United States and/or other countries.

Note
This product shall be manufactured by Victaulic or to Victaulic specifications. All products to be installed in accordance with current Victaulic installation/assembly instructions. Victaulic reserves the right to change product specifications, designs and standard equipment without notice and without incurring obligations.

Installation
Reference should always be made to the Victaulic installation handbook or installation instructions of the product you are installing. Handbooks are included with each shipment of Victaulic products, providing complete installation and assembly data, and are available in PDF format on our website at www.victaulic.com.

Warranty
Refer to the Warranty section of the current Price List or contact Victaulic for details.

Trademarks
Victaulic and all other Victaulic marks are the trademarks or registered trademarks of Victaulic Company, and/or its affiliated entities, in the U.S. and/or other countries.

 © 2020 Victaulic Company. All rights reserved.

Attachment D

PWY SEE System Construction Air Permit and FESOP

ILLINOIS ENVIRONMENTAL PROTECTION AGENCY
1021 NORTH GRAND AVENUE EAST, P.O. BOX 19276, SPRINGFIELD, ILLINOIS 62794-9276 · (217) 782-3397
JB PRITZKER, GOVERNOR
JOHN J. KIM, DIRECTOR

217/785-1705

CONSTRUCTION PERMIT

PERMITTEE

Shell Oil Products US
Attn: Leroy Bealer
128 East Center Street
Nazareth, Pennsylvania 18064

Application No.: 22020023
Applicant's Designation: Roxana Site
Subject: Steam Enhanced Extraction System
Date Issued: May 3, 2022
Location: WRB Refinery Near Intersection of Chaffer Street and 8th Street, Roxana, Madison County

I.D. No.: 119090AAO
Date Received: February 22, 2022
Expiration Date:

This permit is hereby granted to the above-designated Permittee to CONSTRUCT emission unit(s) and/or air pollution control equipment consisting of

Modification to the existing Soil Vapor Extraction (SVE) System controlled by existing Regenerative Thermal Oxidizer (RTO) to include the use of a Steam Enhanced Extraction (SEE) system with one (1) 25.1 mmBtu/hr Natural Gas Fired Steam Boiler and back-up control by use of a Vapor Granular Activated Carbon (VGAC) system (comprised of two (2) in series VGAC).

pursuant to the above-referenced application. This permit is subject to standard conditions attached hereto and the following special condition(s):

1a. This permit is issued based on the emission of Hazardous Air Pollutants (HAP) as listed in Section 112(g) of the Clean Air Act from the steam Enhanced Extraction with one (1) 25.1 mmBtu/hr Natural Gas Fired Steam Boiler being less than 10 tons/year of any single HAP and 25 tons/year of any combination of such HAPs. As a result, this permit is issued based on the emissions of all HAPs from this source not triggering the requirements of Section 112(g) of the Clean Air Act.

b. This permit is issued based on the construction of Steam Enhanced Extraction (SEE) system one (1) 25.1 mmBtu/hr Natural Gas Fired Steam Boiler not constituting a new major source or major modification pursuant to Title I of the Clean Air Act, specifically 40 CFR 52.21 Prevention of Significant Deterioration of Air Quality. The source has requested that the Illinois EPA establish emission limitations and other appropriate terms and conditions in this permit that limit the 100 tons/year for Volatile Organic Material (VOM), 10 tons/year for any single Hazardous Air Pollutant (HAP) and 25 tons/year for any combination of such HAPs) from the above-listed equipment below the levels that would trigger the applicability of these rules.

c. The Steam Enhanced Extraction (SEE) system with Boiler and associated Vapor Granular Activated Carbon (VGAC) system shall not begin operation under this construction permit until construction of SEE system, Boiler and associated VGAC, is complete and reasonable measures short of actual operation have been taken to verify proper operation.

2a. The Boiler and RTO associated with the SVE/SEE system are subject to 35 Ill. Adm. Code Part 212 Subpart B (Visible Emissions). Pursuant to 35 Ill. Adm. Code 212.123(a), no person shall cause or allow the emission of smoke or other particulate matter, with an opacity greater than 30 percent, into the atmosphere from any emission unit other than those emission units subject to 35 Ill. Adm. Code 212.122.

b. Pursuant to 35 Ill. Adm. Code 212.123(b), the emission of smoke or other particulate matter from any such emission unit may have an opacity greater than 30 percent but not greater than 60 percent for a period or periods aggregating 8 minutes in any 60 minute period provided that such opaque emissions permitted during any 60 minute period shall occur from only one such emission unit located within a 305 m (1000 ft) radius from the center point of any other such emission unit owned or operated by such person, and provided further that such opaque emissions permitted from each such emission unit shall be limited to 3 times in any 24 hour period.

c. This source is subject to 35 Ill. Adm. Code Part 212 Subpart K (Fugitive Particulate Matter). Pursuant to 35 Ill. Adm. Code 212.301, no person shall cause or allow the emission of fugitive particulate matter from any process, including any material handling or storage activity, that is visible by an observer looking generally toward the zenith at a point beyond the property line of the source.

3. The RTO associated with the SVE/SEE system is subject to 35 Ill. Adm. Code Part 214 Subpart K (Process Emission Sources). Pursuant to 35 Ill. Adm. Code 214.301, except as further provided by 35 Ill. Adm. Code Part 214, no person shall cause or allow the emission of sulfur dioxide into the atmosphere from any process emission source to exceed 2000 ppm.

4a. The SVE/SEE system is subject to 35 Ill. Adm. Code Part 219 Subpart G (Use of Organic Material). Pursuant to 35 Ill. Adm. Code 219.301, no person shall cause or allow the discharge of more than 3.6 kg/hr (8 lbs/hr) of organic material into the atmosphere from any emission unit, except as provided in 35 Ill. Adm. Code 219.302, 219.303, 219.304 and the following exception: If no odor nuisance exists the limitation of 35 Ill. Adm. Code Part 219 Subpart G shall apply only to photochemically reactive material.

b. Pursuant to 35 Ill. Adm. Code 219.302(a), emissions of organic material in excess of those permitted by 35 Ill. Adm. Code 219.301 are allowable if such emissions are controlled by one of the following methods:

Flame, thermal or catalytic incineration so as either to reduce such emissions to 10 ppm equivalent methane (molecular weight 16) or less,

or to convert 85 percent of the hydrocarbons to carbon dioxide and water.

c. The SVE/SEE system with RTO is subject to 35 Ill. Adm. Code Part 219 Subpart TT (Other Emission Units). Pursuant to 35 Ill. Adm. Code 219.980(a), the requirements of 35 Ill. Adm. Code Part 219 Subpart TT shall apply to a source's VOM emission units, which are not included within any of the categories specified in 35 Ill. Adm. Code Part 219 Subparts B, E, F, H, Q, R, S, T, V, X, Y, Z, AA, BB, PP, QQ, or RR, or are not exempted from permitting requirements pursuant to 35 Ill. Adm. Code 201.146, if the source is subject to 35 Ill. Adm. Code Part 219 Subpart TT. A source is subject to 35 Ill. Adm. Code Part 219 Subpart TT if it contains process emission units, not regulated by 35 Ill. Adm. Code Part 219 Subparts B, E, F (excluding 35 Ill. Adm. Code 219.204(l)), H (excluding 35 Ill. Adm. Code 219.405), Q, R, S, T, (excluding 35 Ill. Adm. Code 219.486 of this Part), V, X, Y, Z or BB, which as a group both:

i. Have maximum theoretical emissions of 91 Mg (100 tons) or more per calendar year of VOM if no air pollution control equipment were used, and

ii. Are not limited to less than 91 Mg (100 tons) of VOM emissions per calendar year in the absence of air pollution control equipment, through production or capacity limitations contained in a federally enforceable permit or a SIP revision.

d. Pursuant to 35 Ill. Adm. Code 219.986(a), every owner or operator of an emission unit subject to 35 Ill. Adm. Code Part 219 Subpart TT shall comply with the requirements of 35 Ill. Adm. Code 219.986(a), (b), (c), (d) or (e).

Emission capture and control equipment which achieve an overall reduction in uncontrolled VOM emissions of at least 81 percent from each emission unit.

5. This permit is issued based on the SVE/SEE system at this source not being subject to the National Emission Standards for Hazardous Air Pollutants (NESHAP) for Site Remediation, 40 CFR 63 Subpart GGGGG because this source is not a major source of HAP as defined in 40 CFR 63.2. This is a result of the federally enforceable production and operating limitations, which were established in this permit to restrict the potential to emit to less than 10 tons/year for any individual Hazardous Air Pollutant (HAP), and 25 tons/year of any combination of such HAPs.

6a. In the event that the operation of this source results in an odor nuisance, the Permittee shall take appropriate and necessary actions to minimize odors, including but not limited to, changes in raw material or installation of controls, in order to eliminate the odor nuisance.

b. The RTO shall be in operation at all times when the associated SVE/SEE system is in operation and emitting air contaminants.

c. The backup VGAC system shall be in operation when the RTO is shut down and SEE system is in operation and emitting air contaminants.

d. The Permittee shall, in accordance with the manufacturer(s) and/or vendor(s) recommendations, perform periodic inspections and maintenance on the RTO and VGAC associated with the SVE/SEE system such that the RTO and VGAC are kept in proper working condition and not cause a violation of the Environmental Protection Act or regulations promulgated therein.

e. The boiler shall only be operated with natural gas as the fuel. The use of any other fuel in the RTO and boiler may require that the Permittee first obtain a construction permit from the Illinois EPA and perform stack testing to verify compliance with all applicable requirements.

7a. The Permittee shall operate the SEE system such that the emissions and operation of the SEE system not exceed the following limits:

Maximum VOM/HAP Emissions (Lbs/Hour)	(Tons/Month)	(Tons/Year)
1.42	0.53	3.43

These limits are based on 35 Ill. Adm. Code 219.301 and emissions shall be calculated using the following equation:

b. Combustion emissions of the SEE System shall not exceed the following limits:

Total Maximum firing rate = 25.106 mmBtu/hr

Maximum Natural gas usage = 215.6 mmscf

Pollutant	Emission Factor (Lb/mmBtu)	Emissions (Tons/Mo)	(Tons/Yr)
Carbon Monoxide (CO)	0.084	0.91	9.06
Nitrogen Oxides (NO_x)	0.10	1.08	10.78
Particulate Matter (PM)	0.0076	0.08	0.82
Sulfur Dioxide (SO_2)	0.0006	0.006	0.06

These limits are based on maximum firing rate, operating hours (8,760 hr/yr), standard AP-42 - Tables 3.1-1 and 3.1-2a emission factors and information in the application.

c. Compliance with annual limits shall be determined on a monthly basis from the sum of the data for the current month plus the preceding 11 months.

8. The issuance of this permit does not relieve the Permittee of the responsibility of complying with the applicable provisions of the State of Illinois Rules and Regulations, Title 35: Subtitle C, Water

Pollution Control, Chapter 1. The Permittee may need to obtain a permit from the Division of Water Pollution Control for operation of the system.

9a. Pursuant to 35 Ill. Adm. Code 201.282, every emission source or air pollution control equipment shall be subject to the following testing requirements for the purpose of determining the nature and quantities of specified air contaminant emissions and for the purpose of determining ground level and ambient air concentrations of such air contaminants:

i. Testing by Owner or Operator. The Illinois EPA may require the owner or operator of the emission source or air pollution control equipment to conduct such tests in accordance with procedures adopted by the Illinois EPA, at such reasonable times as may be specified by the Illinois EPA and at the expense of the owner or operator of the emission source or air pollution control equipment. The Illinois EPA may adopt procedures detailing methods of testing and formats for reporting results of testing. Such procedures and revisions thereto, shall not become effective until filed with the Secretary of State, as required by the APA Act. All such tests shall be made by or under the direction of a person qualified by training and/or experience in the field of air pollution testing. The Illinois EPA shall have the right to observe all aspects of such tests.

ii. Testing by the Illinois EPA. The Illinois EPA shall have the right to conduct such tests at any time at its own expense. Upon request of the Illinois EPA, the owner or operator of the emission source or air pollution control equipment shall provide, without charge to the Illinois EPA, necessary holes in stacks or ducts and other safe and proper testing facilities, including scaffolding, but excluding instruments and sensing devices, as may be necessary.

b. Testing required by Conditions 11 and 12 shall be performed upon a written request from the Illinois EPA by a qualified independent testing service.

10. Pursuant to 35 Ill. Adm. Code 212.110(c), upon a written notification by the Illinois EPA, the owner or operator of a particulate matter emission unit subject to 35 Ill. Adm. Code Part 212 shall conduct the applicable testing for particulate matter emissions, opacity, or visible emissions at such person's own expense, to demonstrate compliance. Such test results shall be submitted to the Illinois EPA within thirty (30) days after conducting the test unless an alternative time for submittal is agreed to by the Illinois EPA.

11. Pursuant to 35 Ill. Adm. Code 219.988(a), when in the opinion of the Illinois EPA it is necessary to conduct testing to demonstrate compliance with 35 Ill. Adm. Code 219.986, the owner or operator of a VOM emission unit subject to the requirements of 35 Ill. Adm. Code Part 219 Subpart TT shall, at his own expense, conduct such tests in accordance with the applicable test methods and procedures specified in

35 Ill. Adm. Code 219.105.

12a. Pursuant to 35 Ill. Adm. Code 219.105(d)(2)(A)(i), an owner or operator: That uses an afterburner or carbon adsorber to comply with any Section of 35 Ill. Adm. Code Part 219 must use Illinois EPA and USEPA approved continuous monitoring equipment which is installed, calibrated, maintained, and operated according to vendor specifications at all times the control device is in use except as provided in 35 Ill. Adm. Code 219.105(d)(3). The continuous monitoring equipment must monitor the following parameters:

For each afterburner which does not have a catalyst bed, the combustion chamber temperature of each afterburner.

b. Pursuant to 35 Ill. Adm. Code 219.105(d)(2)(B), an owner or operator: Must install, calibrate, operate and maintain, in accordance with manufacturer's specifications, a continuous recorder on the temperature monitoring device, such as a strip chart, recorder or computer, having an accuracy of ± 1 percent of the temperature measured, expressed in degrees Celsius or ± 0.5° C, whichever is greater.

13. Pursuant to 40 CFR 63.10(b)(3), if an owner or operator determines that his or her stationary source that emits (or has the potential to emit, without considering controls) one or more hazardous air pollutants regulated by any standard established pursuant to Section 112(d) or (f) of the Clean Air Act, and that stationary source is in the source category regulated by the relevant standard, but that source is not subject to the relevant standard (or other requirement established under 40 CFR Part 63) because of limitations on the source's potential to emit or an exclusion, the owner or operator must keep a record of the applicability determination on site at the source for a period of 5 years after the determination, or until the source changes its operations to become an affected source, whichever comes first. The record of the applicability determination must be signed by the person making the determination and include an analysis (or other information) that demonstrates why the owner or operator believes the source is unaffected (e.g., because the source is an area source). The analysis (or other information) must be sufficiently detailed to allow the USEPA and/or Illinois EPA to make a finding about the source's applicability status with regard to the relevant standard or other requirement. If relevant, the analysis must be performed in accordance with requirements established in relevant subparts of 40 CFR Part 63 for this purpose for particular categories of stationary sources. If relevant, the analysis should be performed in accordance with USEPA guidance materials published to assist sources in making applicability determinations under Section 112 of the Clean Air Act, if any. The requirements to determine applicability of a standard under 40 CFR 63.1(b)(3) and to record the results of that determination under 40 CFR 63.10(b)(3) shall not by themselves create an obligation for the owner or operator to obtain a Title V permit.

14. Pursuant to 35 Ill. Adm. Code 212.110(e), the owner or operator of an emission unit subject to 35 Ill. Adm. Code Part 212 shall retain records of all tests which are performed. These records shall be

retained for at least three (3) years after the date a test is performed.

15a. Pursuant to 35 Ill. Adm. Code 219.991(a)(2), any owner or operator of a VOM emission unit which is subject to the requirements of 35 Ill. Adm. Code Part 219 Subpart PP, QQ, RR or TT and complying by the use of emission capture and control equipment shall comply with the following:

On and after a date consistent with Section 219.106 of this Part, or on and after the initial start-up date, the owner or operator of a subject VOM source shall collect and record all of the following information each day and maintain the information at the source for a period of three years:

i. Control device monitoring data.

ii. A log of operating time for the capture system, control device, monitoring equipment and the associated emission source.

iii. A maintenance log for the capture system, control device and monitoring equipment detailing all routine and non-routine maintenance performed including dates and duration of any outages.

16a. The Permittee shall maintain monthly records of the following items:

i. Records addressing use of good operating practices for the RTO and VGAC system (when in operation) associated with the SVE/SEE system:

A. Records for periodic inspection of the RTO and VGAC system (when in operation) with date, individual performing the inspection, and nature of inspection;

B. Records for prompt repair of defects, with identification and description of defect, effect on emissions, date identified, date repaired, and nature of repair; and

C. Records for monthly photoionization detector (PID) measurements between first and second VGAC vessel.

ii. Measured exhaust total VOM and HAP contaminant concentration (ppmv) in exhaust air flow samples exhausting the SVE and for the SEE system before and after the VGAC system (when in operation). These samples and measurements shall be taken at start-up, once/day for first 3 days, 2 times/week for first 2 weeks and once every other month thereafter. Air samples from the first two weeks shall be sent to a certified lab and analyzed by USEPA method TO-14A using gas chromatography. After the first 2 weeks of operation, the Permittee may measure exhaust total VOM and HAP contaminant concentration (ppmv) in exhaust air using an appropriately calibrated photo or flame ionization detector on a once/every other month basis.

iii. Exhaust air flow rate (dscfm) from the SVE/SEE system at start-up, once per week for first 2 weeks, and once every other month thereafter;

iv. Hours of operation of the system (hours/month, hours/year

v. Natural gas usage (mmscf/month, mmscf/year); and

vi. Monthly and annual emissions of CO, NOx, PM, SO2, VOM, and HAPs from the SEE with boiler with supporting calculations (tons/month and tons/year).

b. All records and logs required by this Condition 17(a) of permit shall be retained at a readily accessible location at the source for at least five (5) years from the date of entry and shall be made available for inspection and copying by the Illinois EPA or USEPA upon request. Any records retained in an electronic format (e.g., computer storage device) shall be capable of being retrieved and printed on paper during normal source office hours so as to be able to respond to an Illinois EPA or USEPA request for records during the course of a source inspection.

17a. If there is an exceedance of or a deviation from the requirements of this permit as determined by the records required by this permit or otherwise, the Permittee shall submit a report to the Illinois EPA's Bureau of Air Compliance Section in Springfield, Illinois within thirty (30) days after the exceedance or deviation. The report shall identify the duration and the emissions impact of the exceedance or deviation, a copy of the relevant records and information to resolve the exceedance or deviation, and a description of the efforts to reduce emissions from, and the duration of exceedance or deviation, and to prevent future occurrences of any such exceedance or deviation.

b. One (1) copy of required reports and notifications shall be sent to:

Illinois Environmental Protection Agency
Bureau of Air
Compliance Section (#40)
P.O. Box 19276
Springfield, Illinois 62794-9276

If you have any questions on this permit, please contact Jocelyn Stakely at 217/785-1705.

William D. Marr
Manager, Permit Section
Bureau of Air

WDM:JRS:tan

STATE OF ILLINOIS
ENVIRONMENTAL PROTECTION AGENCY
DIVISION OF AIR POLLUTION CONTROL
P. O. BOX 19506
SPRINGFIELD, ILLINOIS 62794-9506

STANDARD CONDITIONS FOR CONSTRUCTION/DEVELOPMENT PERMITS ISSUED BY THE ILLINOIS ENVIRONMENTAL PROTECTION AGENCY

July 1, 1985

The Illinois Environmental Protection Act (Illinois Revised Statutes, Chapter 111-1/2, Section 1039) authorizes the Environmental Protection Agency to impose conditions on permits which it issues.

The following conditions are applicable unless superseded by special condition(s).

1. Unless this permit has been extended or it has been voided by a newly issued permit, this permit will expire one year from the date of issuance, unless a continuous program of construction or development on this project has started by such time.

2. The construction or development covered by this permit shall be done in compliance with applicable provisions of the Illinois Environmental Protection Act, and Regulations adopted by the Illinois Pollution Control Board.

3. There shall be no deviations from the approved plans and specifications unless a written request for modification, along with plans and specifications as required, shall have been submitted to the Agency and a supplemental written permit issued.

4. The Permittee shall allow any duly authorized agent of the Agency upon the presentation of credentials, at reasonable times:

   a. to enter the Permittee's property where actual or potential effluent, emission or noise sources are located or where any activity is to be conducted pursuant to this permit,

   b. to have access to and copy any records required to be kept under the terms and conditions of this permit,

   c. to inspect, including during any hours of operation of equipment constructed or operated under this permit, such equipment and any equipment required to be kept, used, operated, calibrated and maintained under this permit,

   d. to obtain and remove samples of any discharge or emission of pollutants, and

   e. to enter and utilize any photographic, recording, testing, monitoring or other equipment for the purpose of preserving, testing, monitoring, or recording any activity, discharge, or emission authorized by this permit.

5. The issuance of this permit:

   a. shall not be considered as in any manner affecting the title of the premises upon which the permitted facilities are to be located,

   b. does not release the Permittee from any liability for damage to person or property caused by or resulting from the construction, maintenance, or operation of the proposed facilities,

   c. does not release the Permittee from compliance with the other applicable statues and regulations of the United States, of the State of Illinois, or with applicable local laws, ordinances and regulations,

   d. does not take into consideration or attest to the structural stability of any units or parts of the project, and

e. in no manner implies or suggests that the Agency (or its officers, agents or employees) assumes any liability, directly or indirectly, for any loss due to damage, installation, maintenance, or operation of the proposed equipment or facility.

6. a. Unless a joint construction/operation permit has been issued, a permit for operation shall be obtained from the Agency before the equipment covered by this permit is placed into operation.

b. For purposes of shakedown and testing, unless otherwise specified by a special permit condition, the equipment covered under this permit may be operated for a period not to exceed thirty (30) days.

7. The Agency may file a complaint with the Board for modification, suspension or revocation of a permit:

a. upon discovery that the permit application contained misrepresentations, misinformation or false statements or that all relevant facts were not disclosed, or

b. upon finding that any standard or special conditions have been violated, or

c. upon any violations of the Environmental Protection Act or any regulation effective thereunder as a result of the construction or development authorized by this permit.

ILLINOIS ENVIRONMENTAL PROTECTION AGENCY
1021 NORTH GRAND AVENUE EAST, P.O. BOX 19276, SPRINGFIELD, ILLINOIS 62794-9276 · (217) 782-3397
JB PRITZKER, GOVERNOR JOHN J. KIM, DIRECTOR

217/785-1705

FEDERALLY ENFORCEABLE STATE OPERATING PERMIT - REVISED

PERMITTEE

Shell Oil Products US
Attn: Leroy Bealer
128 East Center Street
Nazareth, Pennsylvania 18064

Application No.: 12040025 I.D. No.: 119090AAO
Applicant's Designation: Roxana Site Date Received: February 22, 2022
Subject: SVE/SEE System with RTO Control
Date Issued: May 3, 2022 Expiration Date: October 5, 2031
Location: WRB Refinery Near Intersection of Chaffer Street and 8th Street, Roxana, Madison County

This permit is hereby granted to the above-designated Permittee to OPERATE emission unit(s) and/or air pollution control equipment consisting of a soil vapor extraction (SVE) system, including steam enhanced extraction (SEE) with boiler, with regenerative thermal oxidizer (RTO) control and back-up control by use of a Vapor Granular Activated Carbon (VGAC) system (comprised of two (2) in series VGAC) pursuant to the above-referenced application. This permit is subject to standard conditions attached hereto and the following special condition(s):

1a. This Federally Enforceable State Operating Permit (FESOP) is issued:

i. To limit the emissions of air pollutants from the source to less than major source thresholds (i.e., 100 tons/year for Volatile Organic Material (VOM), 10 tons/year for any single Hazardous Air Pollutant (HAP) and 25 tons/year for any combination of such HAPs). As a result, the source is excluded from the requirements to obtain a Clean Air Act Permit Program (CAAPP) permit. The maximum emissions of this source, as limited by the conditions of this permit, are described in Attachment A.

ii. To establish federally enforceable production and operating limitations, which restrict the potential to emit to less than 10 tons/year for any individual Hazardous Air Pollutant (HAP) and 25 tons/year of any combination of such HAPs so that the source is not subject to the requirements of the National Emission Standards for Hazardous Air Pollutants (NESHAP) for Site Remediation, 40 CFR 63 Subpart GGGGG.

b. Prior to initial issuance, a draft of this permit has undergone a public notice and comment period.

c. This permit supersedes all operating permit(s) for this location.

2a. The RTO associated with the SVE and boiler associated with the SEE

system are subject to 35 Ill. Adm. Code Part 212 Subpart B (Visible Emissions). Pursuant to 35 Ill. Adm. Code 212.123(a), no person shall cause or allow the emission of smoke or other particulate matter, with an opacity greater than 30 percent, into the atmosphere from any emission unit other than those emission units subject to 35 Ill. Adm. Code 212.122.

b. Pursuant to 35 Ill. Adm. Code 212.123(b), the emission of smoke or other particulate matter from any such emission unit may have an opacity greater than 30 percent but not greater than 60 percent for a period or periods aggregating 8 minutes in any 60 minute period provided that such opaque emissions permitted during any 60 minute period shall occur from only one such emission unit located within a 305 m (1000 ft) radius from the center point of any other such emission unit owned or operated by such person, and provided further that such opaque emissions permitted from each such emission unit shall be limited to 3 times in any 24 hour period.

c. This source is subject to 35 Ill. Adm. Code Part 212 Subpart K (Fugitive Particulate Matter). Pursuant to 35 Ill. Adm. Code 212.301, no person shall cause or allow the emission of fugitive particulate matter from any process, including any material handling or storage activity, that is visible by an observer looking generally toward the zenith at a point beyond the property line of the source.

3. The RTO associated with the SVE and boiler associated with the SEE system are subject to 35 Ill. Adm. Code Part 214 Subpart K (Process Emission Sources). Pursuant to 35 Ill. Adm. Code 214.301, except as further provided by 35 Ill. Adm. Code Part 214, no person shall cause or allow the emission of sulfur dioxide into the atmosphere from any process emission source to exceed 2000 ppm.

4a. The SVE/SEE system is subject to 35 Ill. Adm. Code Part 219 Subpart G (Use of Organic Material). Pursuant to 35 Ill. Adm. Code 219.301, no person shall cause or allow the discharge of more than 3.6 kg/hr (8 lbs/hr) of organic material into the atmosphere from any emission unit, except as provided in 35 Ill. Adm. Code 219.302, 219.303, 219.304 and the following exception: If no odor nuisance exists the limitation of 35 Ill. Adm. Code Part 219 Subpart G shall apply only to photochemically reactive material.

b. Pursuant to 35 Ill. Adm. Code 219.302(a), emissions of organic material in excess of those permitted by 35 Ill. Adm. Code 219.301 are allowable if such emissions are controlled by one of the following methods:

Flame, thermal or catalytic incineration so as either to reduce such emissions to 10 ppm equivalent methane (molecular weight 16) or less, or to convert 85 percent of the hydrocarbons to carbon dioxide and water.

c. The SVE/SEE system is subject to 35 Ill. Adm. Code Part 219 Subpart TT (Other Emission Units). Pursuant to 35 Ill. Adm. Code 219.980(a), the requirements of 35 Ill. Adm. Code Part 219 Subpart TT shall apply to a source's VOM emission units, which are not included within any of the

categories specified in 35 Ill. Adm. Code Part 219 Subparts B, E, F, H, Q, R, S, T, V, X, Y, Z, AA, BB, PP, QQ, or RR, or are not exempted from permitting requirements pursuant to 35 Ill. Adm. Code 201.146, if the source is subject to 35 Ill. Adm. Code Part 219 Subpart TT. A source is subject to 35 Ill. Adm. Code Part 219 Subpart TT if it contains process emission units, not regulated by 35 Ill. Adm. Code Part 219 Subparts B, E, F (excluding 35 Ill. Adm. Code 219.204(l)), H (excluding 35 Ill. Adm. Code 219.405), Q, R, S, T, (excluding 35 Ill. Adm. Code 219.486 of this Part), V, X, Y, Z or BB, which as a group both:

i. Have maximum theoretical emissions of 91 Mg (100 tons) or more per calendar year of VOM if no air pollution control equipment were used, and

ii. Are not limited to less than 91 Mg (100 tons) of VOM emissions per calendar year in the absence of air pollution control equipment, through production or capacity limitations contained in a federally enforceable permit or a SIP revision.

d. Pursuant to 35 Ill. Adm. Code 219.986(a), every owner or operator of an emission unit subject to 35 Ill. Adm. Code Part 219 Subpart TT shall comply with the requirements of 35 Ill. Adm. Code 219.986(a), (b), (c), (d) or (e).

Emission capture and control equipment which achieve an overall reduction in uncontrolled VOM emissions of at least 81 percent from each emission unit.

5. This permit is issued based on the SVE/SEE system at this source not being subject to the National Emission Standards for Hazardous Air Pollutants (NESHAP) for Site Remediation, 40 CFR 63 Subpart GGGGG because this source is not a major source of HAP as defined in 40 CFR 63.2. This is a result of the federally enforceable production and operating limitations, which were established in this permit to restrict the potential to emit to less than 10 tons/year for any individual Hazardous Air Pollutant (HAP), and 25 tons/year of any combination of such HAPs.

6. Pursuant to 35 Ill. Adm. Code 212.314, 35 Ill. Adm. Code 212.301 shall not apply and spraying pursuant to 35 Ill. Adm. Code 212.304 through 212.310 and 35 Ill. Adm. Code 212.312 shall not be required when the wind speed is greater than 40.2 km/hr (25 mph). Determination of wind speed for the purposes of 35 Ill. Adm. Code 212.314 shall be by a one-hour average or hourly recorded value at the nearest official station of the U.S. Weather Bureau or by wind speed instruments operated on the site. In cases where the duration of operations subject to 35 Ill. Adm. Code 212.314 is less than one hour, wind speed may be averaged over the duration of the operations on the basis of on-site wind speed instrument measurements.

7a. In the event that the operation of this source results in an odor nuisance, the Permittee shall take appropriate and necessary actions to minimize odors, including but not limited to, changes in raw material or installation of controls, in order to eliminate the odor nuisance.

b. The RTO shall be in operation at all times when the associated SVE/SEE system is in operation and emitting air contaminants.

c. The backup VGAC system shall be in operation when the RTO is shut down and SEE system is in operation and emitting air contaminants.

d. The Permittee shall, in accordance with the manufacturer(s) and/or vendor(s) recommendations, perform periodic inspections and maintenance on the RTO and VGAC associated with the SVE/SEE system such that the RTO and VGAC are kept in proper working condition and not cause a violation of the Environmental Protection Act or regulations promulgated therein.

e. The RTO's combustion chamber shall be preheated to at least the manufacturer's recommended temperature but no less than the temperature at which compliance was demonstrated in the most recent compliance test, or 1,400°F in the absence of a compliance test. This temperature shall be maintained during operation.

f. The RTO and boiler shall only be operated with natural gas as the fuel. The use of any other fuel in the RTO and boiler may require that the Permittee first obtain a construction permit from the Illinois EPA and perform stack testing to verify compliance with all applicable requirements.

8a. Emissions from and operation of the SVE/SEE system with RTO not exceed the following limits:

i. VOM emissions:

Maximum VOM Emissions		
(lbs/Hour)	(Tons/Month)	(Tons/Year)
8.00	2.49	24.90

ii. HAP emissions:

Single HAP Emissions		Combined HAP Emissions	
(Tons/Month)	(Tons/Year)	(Tons/Month)	(Tons/Year)
0.79	7.90	1.99	19.90

These limits are based on compliance with 35 Ill. Adm. Code 219.301, the maximum hours of operation, and emissions shall be calculated using the following equation:

$$\text{Emissions (tons)} = \left[\frac{\begin{array}{c}\text{Total SVE/SEE/RTO System Exhaust} \\ \text{Contaminant Concentration (ppmv)} \\ \text{x SVE/SEE/RTO } \rightleftarrows \text{ System } \rightleftarrows \text{ Exhaust Flowrate (scfm)} \\ \text{x 100 lb/lb-Mole} \\ \text{x 60 min/hour}\end{array}}{10^6 \text{ x 387 cu ft/lb - Mole}} \right] x \text{ Hours Operated} \div \frac{2000\ \#}{\text{Ton}}$$

b. Combined Combustion emissions of the SVE/SEE/RTO shall not exceed the following limits:

Maximum Natural gas usage = 241.4 mmscf/yr

Pollutant	Emission Factor (lbs/mmBtu)	Emissions (Tons/Mo)	Emissions (Tons/Yr)
Carbon Monoxide (CO)	0.084	1.05	10.5
Nitrogen Oxides (NO_x)	0.10	1.25	12.5
Particulate Matter (PM)	0.0076	0.1	1.0
Sulfur Dioxide (SO_2)	0.0006	0.01	0.1

These limits are based on maximum firing rate (3.0 mmBtu/hour for the RTO and 25.106 mmBtu/hr for the SEE system steam boiler), 8,760 hours/year of operation, and standard emission factors (Tables 1.4-1 and 1.4-2, AP-42, Fifth Edition, Volume I, Supplement D, July 1998).

c. Compliance with annual limits shall be determined on a monthly basis from the sum of the data for the current month plus the preceding 11 months.

9a. Pursuant to 35 Ill. Adm. Code 201.282, every emission source or air pollution control equipment shall be subject to the following testing requirements for the purpose of determining the nature and quantities of specified air contaminant emissions and for the purpose of determining ground level and ambient air concentrations of such air contaminants:

i. Testing by Owner or Operator. The Illinois EPA may require the owner or operator of the emission source or air pollution control equipment to conduct such tests in accordance with procedures adopted by the Illinois EPA, at such reasonable times as may be specified by the Illinois EPA and at the expense of the owner or operator of the emission source or air pollution control equipment. The Illinois EPA may adopt procedures detailing methods of testing and formats for reporting results of testing. Such procedures and revisions thereto, shall not become effective until filed with the Secretary of State, as required by the APA Act. All such tests shall be made by or under the direction of a person qualified by training and/or experience in the field of air pollution testing. The Illinois EPA shall have the right to observe all aspects of such tests.

ii. Testing by the Illinois EPA. The Illinois EPA shall have the

right to conduct such tests at any time at its own expense. Upon request of the Illinois EPA, the owner or operator of the emission source or air pollution control equipment shall provide, without charge to the Illinois EPA, necessary holes in stacks or ducts and other safe and proper testing facilities, including scaffolding, but excluding instruments and sensing devices, as may be necessary.

b. Testing required by Conditions 10 and 11 shall be performed upon a written request from the Illinois EPA by a qualified independent testing service.

10. Pursuant to 35 Ill. Adm. Code 212.110(c), upon a written notification by the Illinois EPA, the owner or operator of a particulate matter emission unit subject to 35 Ill. Adm. Code Part 212 shall conduct the applicable testing for particulate matter emissions, opacity, or visible emissions at such person's own expense, to demonstrate compliance. Such test results shall be submitted to the Illinois EPA within thirty (30) days after conducting the test unless an alternative time for submittal is agreed to by the Illinois EPA.

11. Pursuant to 35 Ill. Adm. Code 219.988(a), when in the opinion of the Illinois EPA it is necessary to conduct testing to demonstrate compliance with 35 Ill. Adm. Code 219.986, the owner or operator of a VOM emission unit subject to the requirements of 35 Ill. Adm. Code Part 219 Subpart TT shall, at his own expense, conduct such tests in accordance with the applicable test methods and procedures specified in 35 Ill. Adm. Code 219.105.

12a. Pursuant to 35 Ill. Adm. Code 219.105(d)(2)(A)(i), an owner or operator: That uses an afterburner or carbon adsorber to comply with any Section of 35 Ill. Adm. Code Part 219 must use Illinois EPA and USEPA approved continuous monitoring equipment which is installed, calibrated, maintained, and operated according to vendor specifications at all times the control device is in use except as provided in 35 Ill. Adm. Code 219.105(d)(3). The continuous monitoring equipment must monitor the following parameters:

For each afterburner which does not have a catalyst bed, the combustion chamber temperature of each afterburner.

b. Pursuant to 35 Ill. Adm. Code 219.105(d)(2)(B), an owner or operator: Must install, calibrate, operate and maintain, in accordance with manufacturer's specifications, a continuous recorder on the temperature monitoring device, such as a strip chart, recorder or computer, having an accuracy of ± 1 percent of the temperature measured, expressed in degrees Celsius or ± 0.5° C, whichever is greater.

13. Pursuant to 40 CFR 63.10(b)(3), if an owner or operator determines that his or her stationary source that emits (or has the potential to emit, without considering controls) one or more hazardous air pollutants regulated by any standard established pursuant to Section 112(d) or (f) of the Clean Air Act, and that stationary source is in the source category regulated by the relevant standard, but that source is not

subject to the relevant standard (or other requirement established under 40 CFR Part 63) because of limitations on the source's potential to emit or an exclusion, the owner or operator must keep a record of the applicability determination on site at the source for a period of 5 years after the determination, or until the source changes its operations to become an affected source, whichever comes first. The record of the applicability determination must be signed by the person making the determination and include an analysis (or other information) that demonstrates why the owner or operator believes the source is unaffected (e.g., because the source is an area source). The analysis (or other information) must be sufficiently detailed to allow the USEPA and/or Illinois EPA to make a finding about the source's applicability status with regard to the relevant standard or other requirement. If relevant, the analysis must be performed in accordance with requirements established in relevant subparts of 40 CFR Part 63 for this purpose for particular categories of stationary sources. If relevant, the analysis should be performed in accordance with USEPA guidance materials published to assist sources in making applicability determinations under Section 112 of the Clean Air Act, if any. The requirements to determine applicability of a standard under 40 CFR 63.1(b)(3) and to record the results of that determination under 40 CFR 63.10(b)(3) shall not by themselves create an obligation for the owner or operator to obtain a Title V permit.

14. Pursuant to 35 Ill. Adm. Code 212.110(e), the owner or operator of an emission unit subject to 35 Ill. Adm. Code Part 212 shall retain records of all tests which are performed. These records shall be retained for at least three (3) years after the date a test is performed.

15a. Pursuant to 35 Ill. Adm. Code 219.991(a)(2), any owner or operator of a VOM emission unit which is subject to the requirements of 35 Ill. Adm. Code Part 219 Subpart PP, QQ, RR or TT and complying by the use of emission capture and control equipment shall comply with the following:

On and after a date consistent with Section 219.106 of this Part, or on and after the initial start-up date, the owner or operator of a subject VOM source shall collect and record all of the following information each day and maintain the information at the source for a period of three years:

i. Control device monitoring data.

ii. A log of operating time for the capture system, control device, monitoring equipment and the associated emission source.

iii. A maintenance log for the capture system, control device and monitoring equipment detailing all routine and non-routine maintenance performed including dates and duration of any outages.

16a. The Permittee shall maintain records of the following items so as to demonstrate compliance with the conditions of this permit:

i. Records addressing use of good operating practices for the RTO

and VGAC system (when in operation) associated with the SVE/SEE system:

A. Records for periodic inspection of the RTO and VGAC system (when in operation) with date, individual performing the inspection, and nature of inspection; and

B. Records for prompt repair of defects, with identification and description of defect, effect on emissions, date identified, date repaired, and nature of repair.

ii. Measured exhaust total VOM and HAP (single and combined) contaminant concentration (ppmv) in exhaust air flow samples exhausting the SVE/SEE system. These samples and measurements shall be taken at start-up once every month. The Permittee may measure exhaust total VOM and HAP contaminant concentration (ppmv) in exhaust air using an appropriately calibrated photo or flame ionization detector on a once/month basis.

iii. Exhaust air flow rate (dscfm) from the SVE/SEE with RTO and VGAC (when in operation) system at start-up once every month;

iv. Hours of operation of the system (hours/month, hours/year);

v. Natural gas usage (mmscf/month, mmscf/year); and

vi. Monthly and annual emissions of CO, NO_x, PM, SO_2, VOM, and HAPs from the source with supporting calculations (tons/month and tons/year).

b. All records and logs required by this Condition 16(a) of permit shall be retained at a readily accessible location at the source for at least five (5) years from the date of entry and shall be made available for inspection and copying by the Illinois EPA or USEPA upon request. Any records retained in an electronic format (e.g., computer storage device) shall be capable of being retrieved and printed on paper during normal source office hours so as to be able to respond to an Illinois EPA or USEPA request for records during the course of a source inspection.

17. Pursuant to 35 Ill. Adm. Code 212.110(d), a person planning to conduct testing for particulate matter emissions to demonstrate compliance shall give written notice to the Illinois EPA of that intent. Such notification shall be given at least thirty (30) days prior to the initiation of the test unless a shorter period is agreed to by the Illinois EPA. Such notification shall state the specific test methods from 35 Ill. Adm. Code 212.110 that will be used.

18a. Pursuant to 35 Ill. Adm. Code 219.991(a)(3), any owner or operator of a VOM emission unit which is subject to the requirements of 35 Ill. Adm. Code Part 219 Subpart PP, QQ, RR or TT and complying by the use of emission capture and control equipment shall comply with the following:

On and after a date consistent with 35 Ill. Adm. Code 219.106, the owner or operator of a subject VOM source shall notify the Illinois EPA in the following instances:

i. Any record showing a violation of the requirements of 35 Ill. Adm. Code Part 219 Subpart PP, QQ, RR or TT shall be reported by sending a copy of such record to the Illinois EPA within 30 days following the occurrence of the violation.

ii. At least 30 calendar days before changing the method of compliance with 35 Ill. Adm. Code Part 219 Subpart PP or TT from the use of capture systems and control devices to the use of complying coatings, the owner or operator shall comply with all requirements of 35 Ill. Adm. Code 219.991(b)(1). Upon changing the method of compliance with of 35 Ill. Adm. Code Part 219 Subpart PP or TT from the use of capture systems and control devices to the use of complying coatings, the owner or operator shall comply with all requirements of 35 Ill. Adm. Code 219.991(b).

19a. If there is an exceedance of or a deviation from the requirements of this permit as determined by the records required by this permit or otherwise, the Permittee shall submit a report to the Illinois EPA's Bureau of Air Compliance Section in Springfield, Illinois within thirty (30) days after the exceedance or deviation. The report shall identify the duration and the emissions impact of the exceedance or deviation, a copy of the relevant records and information to resolve the exceedance or deviation, and a description of the efforts to reduce emissions from, and the duration of exceedance or deviation, and to prevent future occurrences of any such exceedance or deviation.

b. One (1) copy of required reports and notifications shall be sent to:

Illinois Environmental Protection Agency
Bureau of Air
Compliance Section (#40)
P.O. Box 19276
Springfield, Illinois 62794-9276

It should be noted that the two (2) 629 gallon water storage tanks are exempt from permitting, pursuant to 35 Ill. Adm. Code 201.146(n).

If you have any questions on this permit, please contact Jocelyn Stakely at 217/785-1705.

William D. Marr
Manager, Permit Section
Bureau of Air

WDM:JRS:tan

Attachment A - Emission Summary

This attachment provides a summary of the maximum emissions from the SVE system operating in compliance with the requirements of this federally enforceable permit. In preparing this summary, the Illinois EPA used the annual operating scenario which results in maximum emissions from such a plant. The resulting maximum emissions are below the levels, (e.g., 100 tons/year for VOM, 10 tons/year for any single HAP, and 25 tons/year for any combination of such HAP) at which this source would be considered a major source for purposes of the Clean Air Act Permit Program. Actual emissions from this source will be less than predicted in this summary to the extent that less material is handled, and control measures are more effective than required in this permit.

	E M I S S I O N S (Tons/Year)						
Emission Unit	CO	NO_x	PM	SO_2	VOM	Single HAP	Combined HAPs
SVE/SEE System with RTO	10.5	12.5	1.0	0.1	24.90	7.90	19.90

JRS:tan

STATE OF ILLINOIS
ENVIRONMENTAL PROTECTION AGENCY
DIVISION OF AIR POLLUTION CONTROL
P. O. BOX 19506
SPRINGFIELD, ILLINOIS 62794-9506

STANDARD CONDITIONS FOR OPERATING PERMITS

May, 1993

The Illinois Environmental Protection Act (Illinois Revised Statutes, Chapter 111-1/2, Section 1039) grants the Environmental Protection Agency authority to impose conditions on permits which it issues.

The following conditions are applicable unless superseded by special condition(s).

1. The issuance of this permit does not release the Permittee from compliance with state and federal regulations which are part of the Illinois State Implementation Plan, as well as with other applicable statutes and regulations of the Unites States or the State of Illinois or with applicable local laws, ordinances and regulations.

2. The Illinois EPA has issued this permit based upon the information submitted by the Permittee in the permit application. Any misinformation, false statement or misrepresentation in the application shall be grounds for revocation under 35 Ill. Adm. Code 201.166.

3. a. The Permittee shall not authorize, cause, direct or allow any modification, as defined in 35 Ill. Adm. Code 201.102, of equipment, operations or practices which are reflected in the permit application as submitted unless a new application or request for revision of the existing permit is filed with the Illinois EPA and unless a new permit or revision of the existing permit(s) is issued for such modification.

   b. This permit only covers emission sources and control equipment while physically present at the indicated plant location(s). Unless the permit specifically provides for equipment relocation, this permit is void for an item of equipment on the day it is removed from the permitted location(s) or if all equipment is removed, notwithstanding the expiration date specified on the permit.

4. The Permittee shall allow any duly authorized agent of the Illinois EPA, upon the presentation of credentials, at reasonable times:

   a. To enter the Permittee's property where actual or potential effluent, emission or noise sources are located or where any activity is to be conducted pursuant to this permit;

   b. To have access to and to copy any records required to be kept under the terms and conditions of this permit;

   c. To inspect, including during any hours of operation of equipment constructed or operated under this permit, such equipment and any equipment required to be kept, used, operated, calibrated and maintained under this permit;

   d. To obtain and remove samples of any discharge or emission of pollutants; and

   e. To enter and utilize any photographic, recording, testing, monitoring or other equipment for the purpose of preserving, testing, monitoring or recording any activity, discharge or emission authorized by this permit.

5. The issuance of this permit:

   a. Shall not be considered as in any manner affecting the title of the premises upon which the permitted facilities are located;

b. Does not release the Permittee from any liability for damage to person or property caused by or resulting from the construction, maintenance, or operation of the facilities;

c. Does not take into consideration or attest to the structural stability of any unit or part of the project; and

d. In no manner implies or suggests that the Illinois EPA (or its officers, agents, or employees) assumes any liability, directly or indirectly, for any loss due to damage, installation, maintenance, or operation of the proposed equipment or facility.

6. The facilities covered by this permit shall be operated in such a manner that the disposal of air contaminants collected by the equipment shall not cause a violation of the Environmental Protection Act or regulations promulgated thereunder.

7. The Permittee shall maintain all equipment covered under this permit in such a manner that the performance of such equipment shall not cause a violation of the Environmental Protection Act or regulations promulgated thereunder.

8. The Permittee shall maintain a maintenance record on the premises for each item of air pollution control equipment. These records shall be made available to any agent of the Environmental Protection Agency at any time during normal working hours and/or operating hours. At a minimum, this record shall show the dates of performance and nature of preventative maintenance activities.

9. No person shall cause or allow continued operation during malfunction, breakdown or startup of any emission source or related air pollution control equipment if such operation would cause a violation of an applicable emission standard or permit limitation. Should a malfunction, breakdown or startup occur, which results in emissions in excess of any applicable standard or permit limitation, the Permittee shall:

   a. Immediately report the incident to the Illinois EPA's Regional Field Operations Section Office by telephone, telegraph or other method as constitutes the fastest available alternative, and shall comply with all reasonable directives of the Illinois EPA with respect to the incident;

   b. Maintain the following records for a period of no less than two (2) years:

      i. Date and duration of malfunction, breakdown, or startup,

      ii. Full and detailed explanation of the cause,

      iii. Contaminants emitted and an estimate of quantity of emissions,

      iv. Measures taken to minimize the amount of emissions during the malfunction, breakdown or startup, and

      v. Measures taken to reduce future occurrences and frequency of incidents.

10. If the permit application contains a compliance program and project completion schedule, the Permittee shall submit a project completion status report within thirty (30) days of any date specified in the compliance program and project completion schedule or at six month intervals, whichever is more frequent.

11. The Permittee shall submit an Annual Emission Report as required by 35 Ill. Adm. Code 201.302 and 35 Ill. Adm. Code Part 254.

Attachment E

Water Pollution Control Permit Application

AECOM

Application for Water Pollution Control Permit

Wastewater Pretreatment System
Roxana, IL Public Works Yard

Equilon Enterprises LLC d/b/a Shell Oil Products US

Project reference: Roxana PWY Steam Enhanced Extraction
Project number: 60674381 – October 2022

Delivering a better world

Quality information

Prepared by	Verified by	Approved by
		
Brett Howell, PG Geologist	Samuel Fisher, CHMM Environmental Scientist	Wendy Pennington, PE Project Manager

Revision History

Revision	Revision date	Details	Authorized	Name	Position

Distribution List

# Hard Copies	PDF Required	Association / Company Name

Prepared for:

Equilon Enterprises LLC d/b/a Shell Oil Products US

Prepared by:

Brett Howell, PG
Geologist
M: 309/530-5666
E: brett.howell@aecom.com

AECOM
100 N. Broadway, 20th Floor
St. Louis, MO 63102
aecom.com

Wendy Pennington, PE
Project Manager
M: 314-452-8929
E: wendy.pennington@aecom.com

AECOM
100 North Broadway
20th Floor
St. Louis, MO 63102
aecom.com

Copyright © 2022 by AECOM

All rights reserved. No part of this copyrighted work may be reproduced, distributed, or transmitted in any form or by any means without the prior written permission of AECOM.

Table of Contents

1. Project Description 1
2. Treatment Units 3
3. Wastewater Analysis..... 4

Appendices

Appendix A – Process Flow Diagrams
Appendix B – Oil Water Separator Specification Sheets
Appendix C – Air-Stripper Specification Sheets
Appendix D – Bag Filter Specification Sheets
Appendix E – Liquid Phase Activated Carbon Specification Sheets
Appendix F – Contained-In Determination Request and IEPA Approval Response
Appendix G - Construction & Operation Permit Forms

1. Project Description

Equilon Enterprises LLC d/b/a Shell Oil Products US (Shell) manages work at the Roxana, Illinois project Site (Site). The work is primarily being conducted under the conditions of the RCRA Post-Closure Hazardous Waste Permit (RCRA Permit), issued September 23, 2010 and most recently modified March 28, 2022. Shell retained AECOM Technical Services, Inc. (AECOM) to develop a *Public Works Yard Steam Enhanced Extraction Workplan* (Workplan) outlining the design and remediation activities for subsurface impacts at the Village of Roxana old Public Works Yard (PWY) located in Roxana, Illinois (Village) (**Figure 1**). This Workplan was submitted to Illinois Environmental Protection Agency (IEPA) on January 31, 2022 and was approved with conditions and modifications by IEPA in a letter dated August 22, 2022.



Figure 1. Village of Roxana Public Works Yard

The PWY is bounded on the west and north by Illinois Route 111/Old Edwardsville Road and East 8th Street, respectively. There is a Norfolk Southern railroad corridor along the southern boundary and the Phillips 66 Wood River Refinery (WRR) forms the eastern boundary. Residential properties are directly north of the PWY. The property occupies approximately 2.4 acres, where approximately 0.4 acres is covered or obstructed by buildings and/or structures. Topographically, the western and southern portions of the PWY are at a lower elevation relative to the northeastern portion of the PWY, with a relief of approximately 13 feet. The PWY is

infrequently used by the Village for vehicle maintenance and storage. The PWY is also the location of the Village's former wastewater treatment plant (WWTP). In-ground concrete tanks associated with the former WWTP continue to be used to help manage stormwater overflow in the Village. Ost of the PWY is enclosed by a chain link fence.

The WRR, adjacent to the eastern PWY boundary, currently maintains hydraulic control of the area through the use of a groundwater production system consisting of several water production wells which operate at a minimum combined flow of 3,000 gallons per minute (gpm). The pumped groundwater is used by Phillips 66 (P66), the refinery operator, as process and cooling water. Groundwater pumping is conducted to maintain hydraulic control within WRR property boundaries. Groundwater pumping has altered the natural flow direction of groundwater in the PWY to flow northeast toward WRR property.

The subsurface stratigraphy at the PWY generally consists of the following materials from the ground surface down.

- Fill – (mainly clay, some gravel and cinders, etc.) Extends from the surface to approximately six feet below ground surface (bgs).
- Clay/Silt – (primarily silty clay) Where present, the clay generally extends from the base of the fill to approximately 12 feet bgs.
- Sand – (consisting primarily of fine to medium grained sand, which coarsens with depth, with some silt and clay especially at the shallower depths) The sand begins at the base of the clay (or base of the fill if the clay is not present) and extends the total depth of the borings.

Shell currently operates a Soil Vapor Extraction (SVE) system along the WRR west fenceline and within the Roxana PWY. The SVE wells are connected via 4-inch piping to vapor/liquid separators (VLSs) and a rotary lobe positive displacement blower housed within a customized intermodal freight container (conex). Piping from the SVE wells feeds into the conex, where vapor moves through the VLSs, before traveling through the blower and a baffle connected to a regenerative thermal oxidizer (RTO). A system fan located on the RTO side of the baffle pushes the vapor into the RTO and adds fresh air to dilute the vapor stream as necessary.

A new Steam Enhanced Extraction (SEE) system will be installed at the PWY and tied into the existing SVE system. SEE is an in-situ thermal remediation technology where steam is generated at the surface via a boiler and then injected through wells within a designated treatment interval. With the increase in temperature, vaporization, volatilization, dissolution, and desorption are enhanced, such that conditions are more favorable for the removal of volatile organic compounds (VOCs). In addition, liquid viscosities, non-aqueous phase liquid (NAPL)-water interfacial tensions and densities decrease at elevated temperatures, which enhances NAPL mobility and extraction potential. In conjunction with steam injection, liquid and vapor will be extracted through the use of multi-phase extraction (MPE) wells for treatment. Liquids will be separated from vapors through a series of knockouts before being treated on site via an oil-water separator, air stripper, bag filters, and liquid-phase activated carbon vessels. After successful treatment, liquids will be discharged to the local Publicly Owned Treatment Works (POTW) via the public stormwater system connection on site. The separated vapor stream will be drawn through two vacuum blowers, then will connect to the existing SVE system located on WRR property where it will pass through a final VLS before entering the RTO for destruction. Process flow diagrams of the SEE condensate/groundwater treatment system are included in **Appendix A**.

2. Treatment Units

2.1 Oil-Water Separator (OWS)

Shell proposes to install a HydroQuip LP-Q Model, or equivalent, oil/water separator (OWS). The OWS will remove LNAPL, if present, from the soil vapor condensate and extracted groundwater. Pumps will transfer the condensate and groundwater mixture from an initial knockout tank to the OWS at a maximum flow rate of 50 gallons per minute (gpm). OWS effluent will be pumped at a maximum flow rate of 50 gpm to an air stripper unit for further treatment. LNAPL separated from the condensate/groundwater stream will flow by gravity from the OWS to a 250-gallon aboveground storage tank, where it will then be transported and disposed of according to applicable regulations. Vendor specifications for the OWS are included in **Appendix B.**

2.2 Air-Stripper (AS)

Shell proposes to install a QED Environmental Systems. Inc. EZ-12.6HF Model, or equivalent, air stripper. The air stripper will remove hydrocarbons from the condensate/groundwater mixture. Water will be pumped at a maximum flow rate of 50 gpm from the OWS to the air stripper. Inside the air stripper, the potentially hydrocarbon-impacted water will contact ambient air, which will volatilize the hydrocarbons. Vapor emissions from the air stripper containing the volatilized hydrocarbons will flow to another knockout tank before flowing to the existing RTO, which treats the hydrocarbons via thermal oxidation. Treated effluent from the air stripper will be pumped at a maximum flow rate of 50 gpm to a series of bag filters for further treatment. Vendor specifications for the air stripper and accessories are included in **Appendix C.**

2.3 Bag Filters

Shell proposes to install three pairs of Rosedale Products Incorporated Model 8, or equivalent, bag filters. The bag filters will remove solids that make it through the OWS and air stripper units. Water will be pumped through the bag filters at a maximum flow rate of 50 gpm from the air stripper. The bag filter sets will be designed so that the full process flow can go through one bag filter housing while the other is being changed. Treated effluent from the bag filters will be pumped at a maximum flow rate of 50 gpm to two 2,000-pound liquid phase activated carbon vessels. Vendor specifications for the bag filters are included in **Appendix D.**

2.4 Liquid Phase Activated Carbon

Shell proposes to install two TetraSolv HPAF Series, or equivalent, 2,000-pound liquid phase activated carbon vessels. Liquid discharge from the bag filters flow to carbon vessels operated in series. Dissolved phase organic contaminants that pass through the carbon will be adsorbed. The treated water will be pumped into a final 5,000-gallon equalization tank from which the water can be sampled to determine if discharge to the POTW can occur or if recirculation is needed. Vendor specifications for the carbon vessels are included in **Appendix E.**

3. Wastewater Analysis

3.1 Raw Wastewater

Per the 100% Remedial Design Report for the proposed SEE System, provided by McMillan McGee Corp. and IEPA Condition 13 provided in their August 22, 2022, approval letter, liquid samples will be collected periodically at the following locations/frequencies at a minimum.

- Immediately upstream of the air stripper, at the outlet of the OWS unit – every other week
- Downstream of the air stripper – every other week
- Immediately downstream of the first carbon vessel – every other week
- Immediately downstream of the second carbon vessel – every week

These samples to be collected every other week will be used to calculate dissolved phase contaminant mass removal from the subsurface as well as to evaluate individual treatment vessel efficiency and media consumption or breakthrough. The samples to be collected every week are to monitor the effluent water that will be discharged to the Roxana POTW.

3.2 Treated Effluent

Raw wastewater is environmental media that may contain a listed hazardous waste, benzene (RCRA hazardous waste code U019), which must be regulated under Illinois RCRA regulations. However, the condensate/groundwater mixture treatment system will remove the hazardous waste from the environmental media such that it no longer contains a listed hazardous waste. A RCRA "contained-in" determination was submitted to Illinois Environmental Protection Agency (IEPA) Bureau of Land and was approved on July 11, 2022. **Appendix F** contains a copy of the Contained-In Determination request and IEPA's concurrence letter.

After treatment, the effluent groundwater will be analyzed for benzene (constituent of primary concern) on a weekly basis. If the benzene concentration in the treated effluent meets the criterion listed in the table below, it will be considered to no longer contain hazardous waste.

Constituent	Criterion	Source/Logic
Benzene	0.14 mg/L	35 IAC 728 Table U; also satisfies 0.5 mg/L hazardous waste characterization toxicity threshold

The treated effluent water will be sampled initially prior to any discharge to the Roxana POTW and weekly thereafter during the proposed SEE System operation to verify that the required criterion above is being met. Once discharge to the Roxana POTW begins, it is planned to be continuous.

The Roxana POTW operates under NPDES Permit IL-0077356. Both the proposed PWY SEE System average and peak rates (40 and 50 gpm, respectively) will account for less than 3.5% of the maximum design flow for the Roxana POTW (1,443.52 gpm). If the proposed PWY SEE System hits a period of peak discharge (POTW input), it would account for about 11% of the Roxana POTW daily average flow (451.1 gpm).

Appendix G contains the permit application forms for this request.

Appendix A – Process Flow Diagrams

LEGEND:

- WASTE WATER AND GROUND WATER
- TREATED WATER
- CHILLER LIQUID
- COOLING TOWER WATER
- AIR
- VAPOURS
- NAPL
- SLUDGE

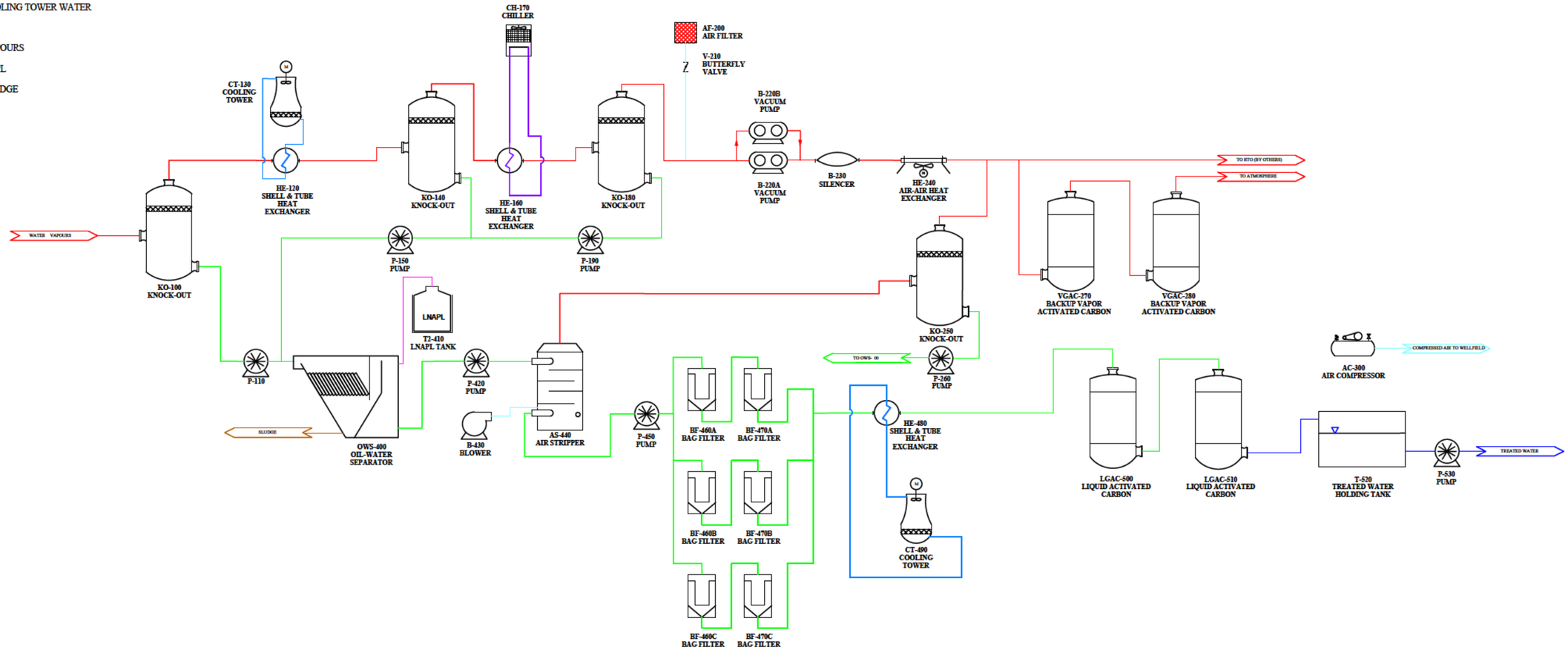

KO-100 KNOCK-OUT 3 5 FT DIA 200 gal BTWN HIGH AND LOW LEVEL	P-110 50 gpm AT 50 FT HEAD	HE-120 SHELL & TUBE HEAT EXCHANGER 2E6 BTU/HR ~975 FT^2 SA 111 gpm CW	CT-130 COOLING TOWER 111 gpm CW INLET: 113°F OUTLET: 77°F	KO-140 KNOCK-OUT 2 5 FT DIA 100 gal BTWN HIGH AND LOW LEVEL	P-150 PUMP 10 gpm AT 50 FT HEAD	HE-160 SHELL & TUBE HEAT EXCHANGER 1 8E5 BTU/HR ~822 FT^2 SA 19 7 gpm COOLANT
CH-170 CHILLER 1 8E6 BTU/HR COOLANT IS 50% PROPYLENE GLYCOL/50% WATER	KO-180 KNOCK-OUT 2 5 FT DIA 100 gal BTWN HIGH AND LOW LEVEL	P-190 PUMP 5 gpm AT 50 FT HEAD	AF-200 AIR FILTER FOR 4 IN VAPOUR LINE 500 SCFM	V-210 BUTTERFLY VALVE 4 IN	B-220A/B VACUUM PUMP Sutorbilt Legend DSL 6LV 891 SCFM 21 5 LB/H WATER VAPOUR	B-230 SILENCER 891 SCFM 80 dB AT 5 FT HEAD
HE-240 FIN-FAN HEAT EXCHANGER 7 2E5 BTU/HR ~1250 FT^2 SA	KO-250 KNOCK-OUT 2 5 FT DIA 100 gal BTWN HIGH AND LOW LEVEL	P-260 PUMP 5 gpm AT 50 FT HEAD	VGAC-270 BACKUP VAPOR ACTIVATED CARBON 5 0 FT DIA 2500 LB	VGAC-280 BACKUP VAPOR ACTIVATED CARBON 5 0 FT DIA 2500 LB		
AC-300 AIR COMPRESSOR 32 SCFM AT 150 psig	OWS-400 OIL-WATER SEPARATOR 20 µm OIL DROPLET SEPARATION AT 50 gpm	T2-410 LNAPL TANK 250 gal	P-420 PUMP 50 gpm AT 100 FT HEAD	B-430 BLOWER 600 SCFM	AS-440 AIR STRIPPER A:W RATIO OF 74 8	P-450 PUMP 50 gpm AT 50 FT HEAD
BF-460A/B BAG FILTER TRADE SIZE 2	BF-470A/B BAG FILTER TRADE SIZE 2	HE-480 SHELL & TUBE HEAT EXCHANGER 2 02E6 BTU/HR ~1000 FT^2 SA	CT-490 COOLING TOWER 113 gpm CW INLET: 113°F OUTLET: 77°F	LGAC-500 LIQUID ACTIVATED CARBON 3 6 FT DIA 2000 LB	LGAC-510 LIQUID ACTIVATED CARBON 3 6 FT DIA 2000 LB	T-520 TREATED WATER HOLDING TANK 5000 gal
P-530 PUMP 50 gpm AT 50 FT HEAD						

FOR REVIEW AND COMMENT

McMILLAN-McGEE CORP.

ELECTROMAGNETIC SYSTEMS AND SERVICES FOR THE ENERGY AND ENVIRONMENTAL INDUSTRIES

4895 - 35B STREET SE
CALGARY, AB T2B 3M9 CANADA

WWW.MCMILLAN-MCGEE.COM
PH: 403.569.5100, FX: 403.272.7201

LPE

REV.	DATE (D/M/Y)	DESCRIPTION	DRAWN BY	ORG/ ENGR	Aproved Dist
B3	2021/09/30	90% DESIGN	JS	JS	DAR
B2	2021/09/27	REVISE EQUIPMENT AND ADD SPECS	JS	JS	DAR
B1	2021/08/27	60% DESIGN	JS	JS	CC
A1	2020/03/09	FOR REVIEW AND COMMENT	TL	TL	DAR

DATE

APEGA PERMIT NUMBER: P09178

SCALE: NOT TO SCALE

TITLE: **Process Flow Diagram**

CLIENT: **AECOM**

PROJECT: **Roxana Public Works Yard**
Roxana, Illinois

SHEET: **PFD-01**

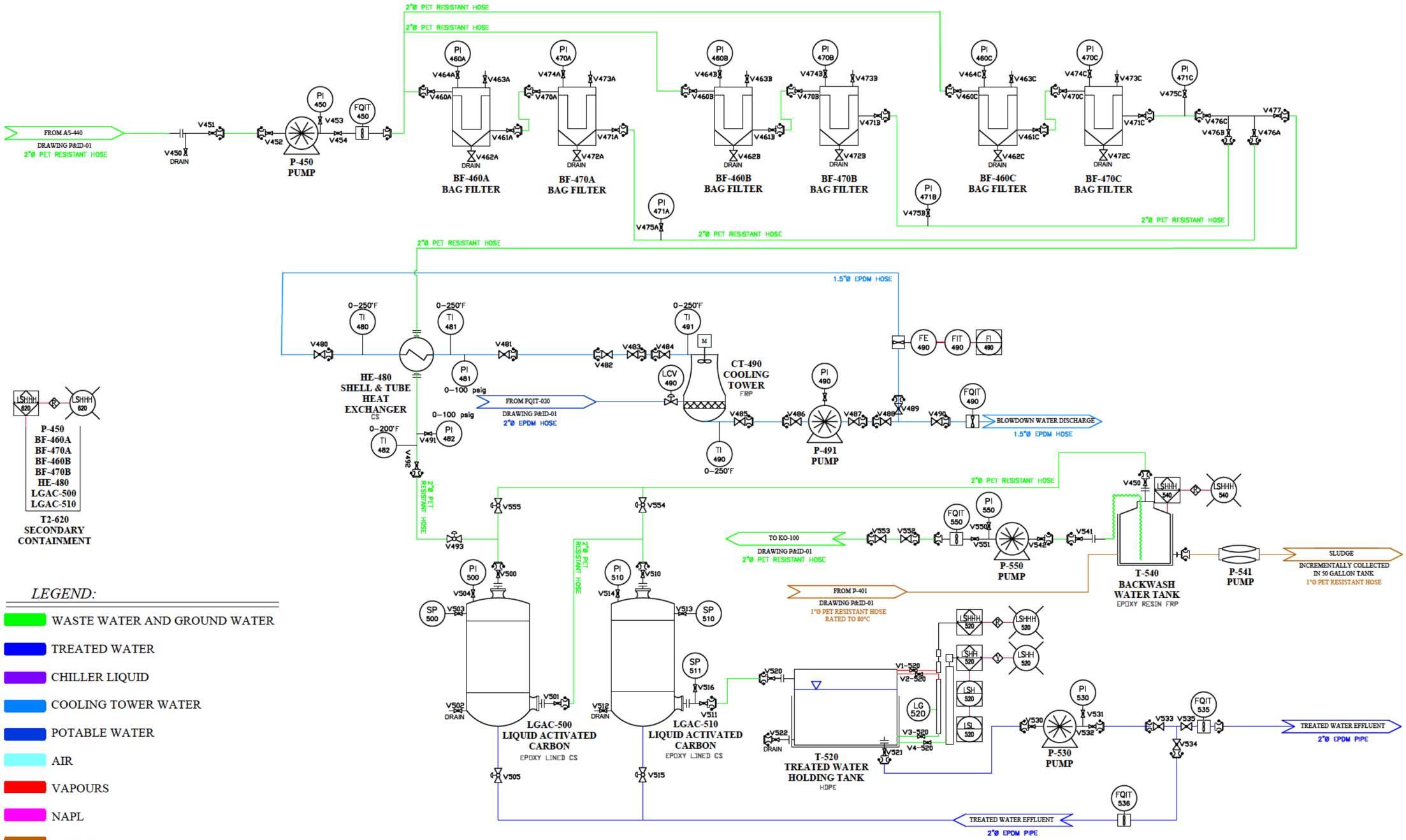

FOR REVIEW AND COMMENT

McMillan-McGee Corp.

Electromagnetic Systems and Services
For the Energy and Environmental Industries

4895 - 35B Street SE
Calgary, AB T2B 3M9 Canada

www.mcmillan-mcgee.com
Ph: 403.569.5100, Fx: 403.272.7201

REV.	DATE (D/M/YY)	DESCRIPTION	DRAWN SY	ORG/ ENGR	Aproved Dist
B1	2021/09/30	90% DESIGN	JS	JS	DAR
A1	2021/09/22	FOR REVIEW AND COMMENT	JS	JS	DAR

APEGA PERMIT NUMBER: P09178 — SCALE: NOT TO SCALE

LPE

DATE

TITLE: **Process and Instrumentation Diagram**

CLIENT: **AECOM**

PROJECT: **Roxana Public Works Yard**
Roxana, Illinois

SHEET: **P&ID-04**

Appendix B – Oil Water Separator Specification Sheets

Inclined Plate Clarifiers

LP & LP-Q MODELS

- Lower installed cost
- Easily installed indoors
- Minimal start-up/restart time
- Lower maintenance costs
- Occupies less floor space
- Minimal field labor required to install



The Hydro Quip Inclined Plate Clarifiers are designed and manufactured to provide for the precipitation and separation of suspended solids. Our design employs the use of a series of plates inclined at an angle of 45° or 55°. This specialized design allows the unit to perform all of the functions of a conventional solids contact clarifier at a fraction of the space and cost.

LP Model: separation of suspended solids from water
LP-Q Model: separation of suspended solids and trace amounts of oil in water

INLET COMPARTMENT

The inlet compartment receives the raw water from the process. After entering through the non-clogging inlet nozzle, the water in the LP model is dispersed evenly through the chamber.

In the LP-Q model, the water enters the quiescent zone. This area disperses the energy and evenly distributes the flow. A skimmer is provided to decant the oil to a separate tank.

SEPARATION CHAMBER

The raw water from the inlet chamber passes down under the plate pack skirt and moves upwards toward the plate pack. As the water moves upwards, the suspended particles have their upward velocity interrupted by the inclined plates. These particles drop down and slide down the inclined plate and join larger previously settled particles in the sludge hopper. Individual plates are easily installed and removed.

SLUDGE CHAMBER

The sludge chamber collects the solids as they fall. The sludge hopper is sloped at a minimum 45° angle to concentrate the sludge and avoid bridging.

CLEAN WATER CHAMBER

The clarified water exits the top of the plates and flows into the effluent trough. From this point the clarified effluent flows by gravity and exits the unit through the effluent nozzle.

PERFORMANCE

- Excellent separation of suspended solids
- Up to 1200 sq ft of projected plate surface area
- Effective separation of hard to settle solids
- Ability to produce up to 3% – 5% concentrated sludge

TECHNICAL FEATURES

- Individual removable polypropylene or stainless steel plates
- Stainless steel or coated carbon steel tanks
- Complete shop assembly
- Adjustable effluent weir
- Oil skimming connections
- Inspection hatch/ window
- Sample ports

OPTIONAL EQUIPMENT/ FEATURES

The inclined plate clarifier is available with a number of different options such as:

- Access Platform and Ladder (or Stairs)
- Cover
- Flash Mixer Chamber with Mixer
- Flocculation Tank with Slow Speed Mixer
- Instrumentation / Controls
- Chemical Feed Equipment
- Sludge Handling and Dewatering
- Concrete Tank Designs

LP MODEL

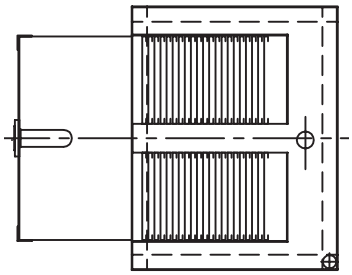

PLAN

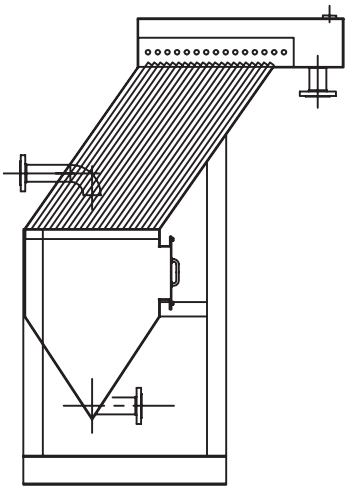

RIGHT SIDE VIEW

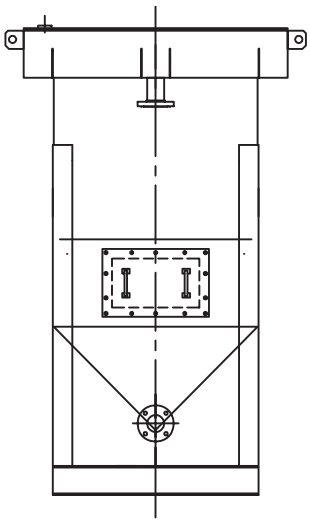

ELEVATION

SPECIFICATIONS

*Dimensions are approximate and may vary depending on your application.

** Flow rates are based on 0.25 GPM per square foot of projected plate surface area.

LP Model	Number of Plates	Length	Width	Height	Flow Rate (GPM)
HQI-CLA-20LP	11	3’-0”	2’-8”	5’-0”	5
HQI-CLA-40LP	18	3’-10”	3’-0”	5’-4”	10
HQI-CLA-60LP	18	3’-10”	4’-0”	5’-9”	15
HQI-CLA-84LP	19	5'-6"	4'-6"	7'-7"	20
HQI-CLA-125LP	21	5'-6"	4'-6"	8'-0"	32
HQI-CLA-200LP	29	6'-8"	4'-6"	9'-0"	50
HQI-CLA-266LP	29	7'-0"	5'-6"	9'-4"	65
HQI-CLA-333LP	39	7'-8"	5'-6"	9'-4"	83
HQI-CLA-400LP	44	8'-6"	5'-6"	9'-4"	100
HQI-CLA-500LP	44	8'-6"	6'-6"	9'-4"	125
HQI-CLA-600LP	42	9'-0"	6'-6"	10'-10"	150
HQI-CLA-700LP	39	8'-10"	7'-6"	12'-0"	175
HQI-CLA-800LP	45	9'-4"	7'-6"	12'-0"	200
HQI-CLA-1000LP	50	10'-8"	7'-6"	13'-0"	250
HQI-CLA-1200LP	59	11'-6"	8'-6"	13'-6"	300

LP-Q MODEL

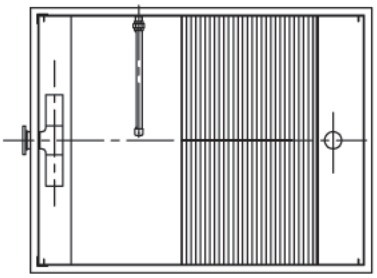

PLAN

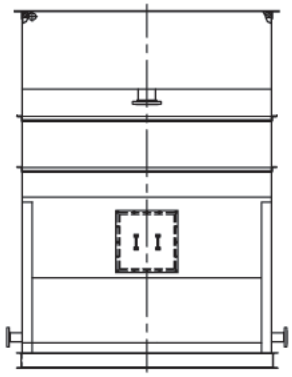

RIGHT SIDE VIEW

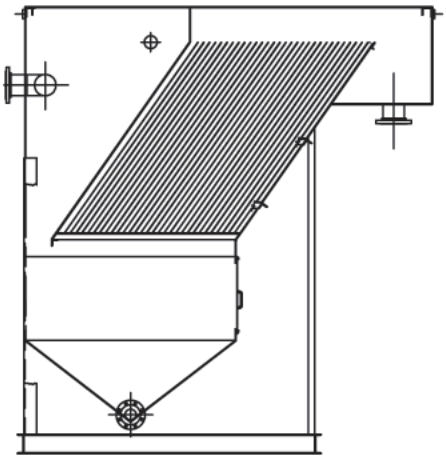

ELEVATION

SPECIFICATIONS

*Dimensions are approximate and may vary depending on your application.

** Flow rates are based on 0.25 GPM per square foot of projected plate surface area.

LP-Q Model	Number of Plates	Length	Width	Height	Flow Rate (GPM)
HQI-CLA-20LP-Q	16	5' 0"	2' 4"	6' 0"	5
HQI-CLA-40LP-Q	16	5' 0"	3' 4"	6' 0"	10
HQI-CLA-60LP-Q	16	5' 0"	3' 6"	6' 0"	15
HQI-CLA-84LP-Q	17	6' 0"	3' 6"	7' 0"	20
HQI-CLA-125LP-Q	25	7' 0"	3' 6"	7' 0"	32
HQI-CLA-200LP-Q	29	7' 0"	3' 6"	8' 0"	50
HQI-CLA-266LP-Q	29	7' 0"	4' 6"	8' 0"	65
HQI-CLA-333LP-Q	29	7' 0"	5' 6"	8' 0"	83
HQI-CLA-400LP-Q	28	7' 0"	5' 6"	10' 0"	100
HQI-CLA-500LP-Q	29	7' 0"	6' 6"	10' 0"	125
HQI-CLA-600LP-Q	29	7' 0"	6' 6"	11' 6"	150
HQI-CLA-700LP-Q	29	7' 0"	7' 6"	11' 6"	175
HQI-CLA-800LP-Q	29	7' 0"	8' 6"	11' 6"	200
HQI-CLA-1000LP-Q	32	10' 6"	8' 6"	13' 6"	250
HQI-CLA-1200LP-Q	38	12' 2"	8' 6"	13' 6"	300

HYDRO QUIP

Whether an off-the-shelf unit or customized equipment, we'll help you determine the best solution for your application and site-specific needs.

TEL: 508-399-5771
FAX: 508-399-5352
108 Pond St, Seekonk, MA 02703
hqisales@hydroquipinc.com
www.hydroquipinc.com

Appendix C – Air-Stripper Specification Sheets

SECTION 7200
ENGINEERING SPECIFICATION: AIR STRIPPER BLOWER

PART 1— GENERAL

1.1 SCOPE

1.1.1 The manufacturer shall furnish a blower for use with a low profile, multi-tray Air Stripper.

1.2 PROCESS DESCRIPTION

1.2.1 The blower impeller, driven by the direct-coupled motor, pressurizes air and supplies it to the stripper with sufficient flow and pressure to generate a froth of bubbles in the water contained by up to six stripper trays.

1.3 SUBMITTALS

1.3.1 Manufacturer shall submit the following with the bid:

1.3.1.1 Product data for selected model, including rated output capacity, electrical specifications, and warranty coverage. See attached Data Sheet for full specification.

PART 2 — PRODUCTS

2.1 GENERAL

2.1.1 The blower shall be a direct drive pressure blower (scroll type or a direct drive regenerative type blower. See Data Sheet for model number. Equipment shall be supplied by QED Environmental Systems, Inc. and represented by _____ or pre-approved equivalent.

2.1.2 Blower design and performance shall meet requirements specified on the Data Sheet attached to this specification.

2.2 EQUIPMENT DESIGN REQUIREMENTS-DIRECT DRIVE BLOWER

2.2.1 Standard product design shall include one pressure blower with all-welded steel housing and aluminum wheel, with the following specifications:

REV 010122 Copyright 2001 QED

2.2.1.1 Blower shall be an industrial quality model rated for continuous duty, certified and licensed to bear the AMCA (Air Movement and Control Association, Inc.) Seal, in accordance with AMCA Publication 211.

2.2.1.2 Blower shall be factory balanced and motor-coupled.

2.2.1.3 Blower shall be supplied with an air flow throttle, factory installed preset to match stripper system requirements, and labeled to indicate settings for clean operation, turn-up range, and overload conditions.

2.2.1.4 Blower inlet shall be equipped with a 90° elbow serving as an inlet safety guard, ready for connection to an air inlet duct if desired.

2.2.1.5 Blower shall include a built-in water drain.

2.2.2 Standard product design shall include one industrial quality (such as Baldor, GE or preapproved equal) electric motor, with the following specifications:

2.2.2.1 Blower-motor unit shall be a compact, direct-drive arrangement with the blower wheel mounted directly on motorshaft, to minimize the number of moving parts and for ease of maintenance.

2.2.2.2 Motor must meet the system's electrical voltage/phase and explosion-proof requirements (if applicable). See attached Data Sheet for specifications.

2.2.3 Standard product design shall include outlet ducting to connect the blower outlet flange to the stripper inlet ducting. Duct size and design shall be sufficient to allow the blower to operate at full capacity. Duct design shall include a section routed high to prevent water from reaching the blower in the event of a system shutdown.

2.2.4 Blower/motor unit shall be primed and painted.

2.3 EQUIPMENT DESIGN REQUIREMENTS-REGENERATIVE BLOWER

2.3.1 Standard product design shall include one regenerative blower with cast rather than fabricated aluminum impeller (for ruggedness), housing and cover, meeting the following specifications:

REV 010122 Copyright 2001 QED

2.3.1.1 Blower shall be an industrial quality model rated for continuous duty at the required workload.

2.3.1.2 Blower shall be factory balanced and motor-coupled. Blower shall be equipped with a Teflon shaft seal, final assembly leak tested to less than 1cc/sec @ 3 psi.

2.3.1.3 Blower shall be supplied with an air flow throttle, factory installed preset to match stripper system requirements, and labeled to indicate settings for clean operation, turn-up range, and overload conditions.

2.3.1.4 Blower shall be equipped with an inlet filter and integral intake and exhaust mufflers, held in place with a screen (spring or wire hold-down is not acceptable), to minimize operating noise levels.

2.3.1.5 Inlet and outlet flanges shall be of cast iron; soft metals, such as aluminum are not allowed.

2.3.2 Standard product design shall include one industrial quality UL and CSA approved electric motor, with the following specification:

2.3.2.1 Blower-motor unit shall be a maintenance-free, compact direct-drive arrangement.

2.3.2.2 Motor must meet the system's electrical voltage/phase and explosion-proof requirements (if applicable). See attached Data Sheet for specifications.

2.3.2.3 Motor must be rated for continuous duty and carry full rated load at temperatures below insulation limits; motor ball bearings shall be double sealed with a rated life of not less than 20,000 hours continuous duty at the maximum rated blower load.

2.3.3 Standard product design shall include outlet ducting to connect the blower outlet flange to the stripper inlet ducting. Duct size and design shall be sufficient to allow the blower to operate at full capacity. Duct design shall include a section routed high to prevent water from reaching the blower in the event of a system shutdown.

2.3.4 Blower/motor unit shall be primed and painted.

2.4 OPERATION AND PERFORMANCE PARAMETERS

2.4.1 Blower shall be sized to allow turn-up to overcome fouling of the stripper, extending the time between cleanings. See Data Sheet for output curves.

REV 010122 Copyright 2001 QED

ENGINEERING DATA SHEET
BLOWERS: ALL MODELS FOR AIR STRIPPERS

REF — ITEMS and SPECIFICATIONS

2.1.1, 2.2.2.2 2.3.2.2 — EZ-STACKER STRIPPER BLOWERS

Model No.	Type*	Used on Stripper	Electrical Specifications	Max CFM	Motor HP
805188	R	2.4P	115-230V/1PH/TEFC	145	2.0
805189	R	2.4P	115-230V/1PH/EXP	145	2.0
805190	R	2.4P	230/460V/3PH/TEFC	145	2.0
805191	R	2.4P	230/460V/3PH/EXP	145	2.0
805192	R	2.6P	115-230V/1PH/TEFC	180	3.0
805193	R	2.6P	115-230V/1PH/EXP	180	3.0
805194	R	2.6P	230/460V/3PH/TEFC	180	3.0
805195	R	2.6P	230/460V/3PH/EXP	180	3.0
807034	P	4.4P,4.6P	230/460V/3PH/TEFC	600	5.0
807035	P	4.4P,4.6P	230/1PH/TEFC	600	5.0
807036	P	4.4P,4.6P	230/460V/3PH/EXP	600	5.0

* R-Regenerative type, P-Pressure type

2.1.1, 2.2.2.2 2.3.2.2 — EZ-TRAY STRIPPER BLOWERS

Model No.	Type*	Used on Stripper	Electrical Specifications	Max CFM	Motor HP
807034	P	4.4,6.4,8.4	230/460V/3PH/TEFC	600	5.0
807035	P	4.4,6.4,8.4	115-230V/1PH/TEFC	600	5.0
807036	P	4.4,6.4,8.4	230/460V/3PH/EXP	600	5.0
807037	P	12.4,16.4	230/460V/3PH/TEFC	1100	7.5
807038	P	12.4,16.4	230V/1PH/TEFC	1100	7.5
807039	P	12.4,16.4	230/460V/3PH/EXP	1100	7.5
807040	P	24.4	230/460V/3PH/TEFC	2200	15.0
807041	P	24.4	230/460V/3PH/EXP	2200	15.0
807139	P	4.6,6.6,8.6	230/460V/3PH/TEFC	500	5.0
807140	P	4.6,6.6,8.6	115-230V/1PH/TEFC	500	5.0
807141	P	4.6,6.6,8.6	230/460V/3PH/EXP	500	5.0
807142	P	12.6,16.6	230/460V/3PH/TEFC	1000	7.5
807143	P	12.6,16.6	230V/1PH/TEFC	1000	7.5
807144	P	12.6,16.6	230/460V/3PH/EXP	1000	7.5
807145	P	24.6	230/460V/3PH/TEFC	1700	15.0
807146	P	24.6	230/460V/3PH/EXP	1700	15.0

* P-Pressure type

(Note: To use this Data Sheet in a specification, either reproduce the whole table above and indicate which model number is being specified, or include only the data for the model selected.)

REV 010122 Copyright 2001 QED

2.4.1 BLOWER OUTPUT CURVES

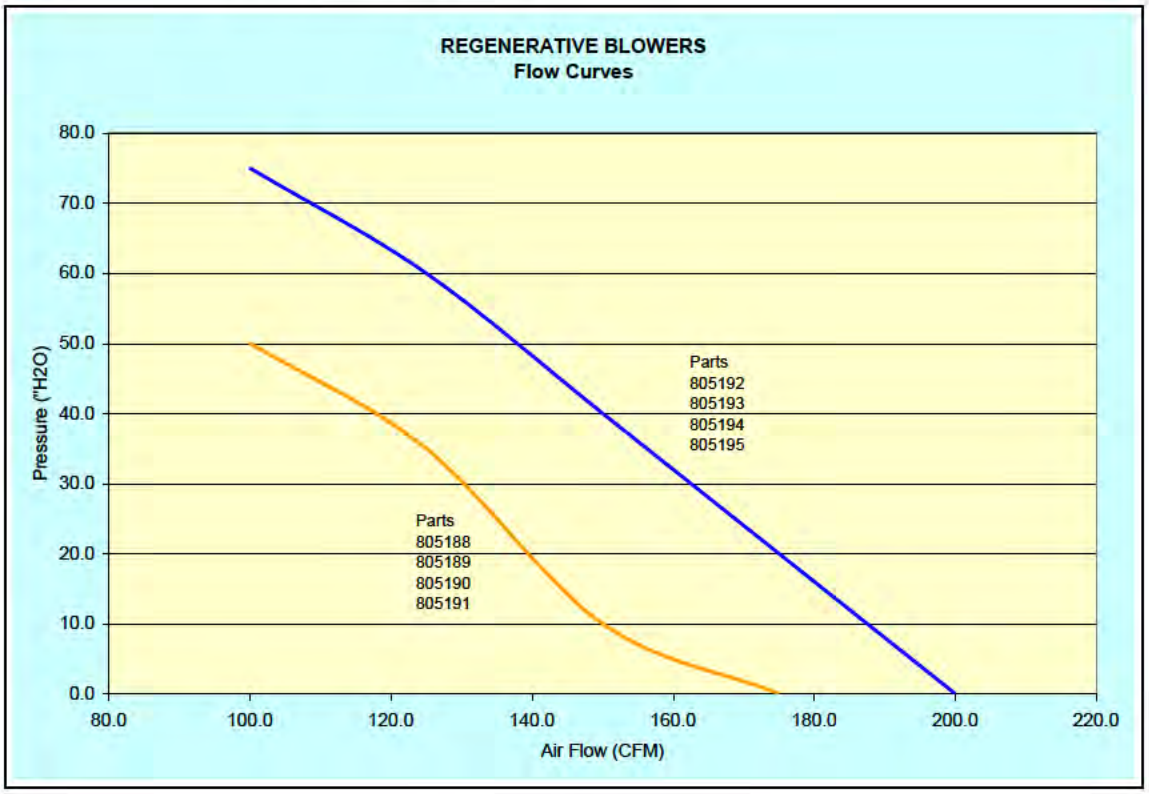

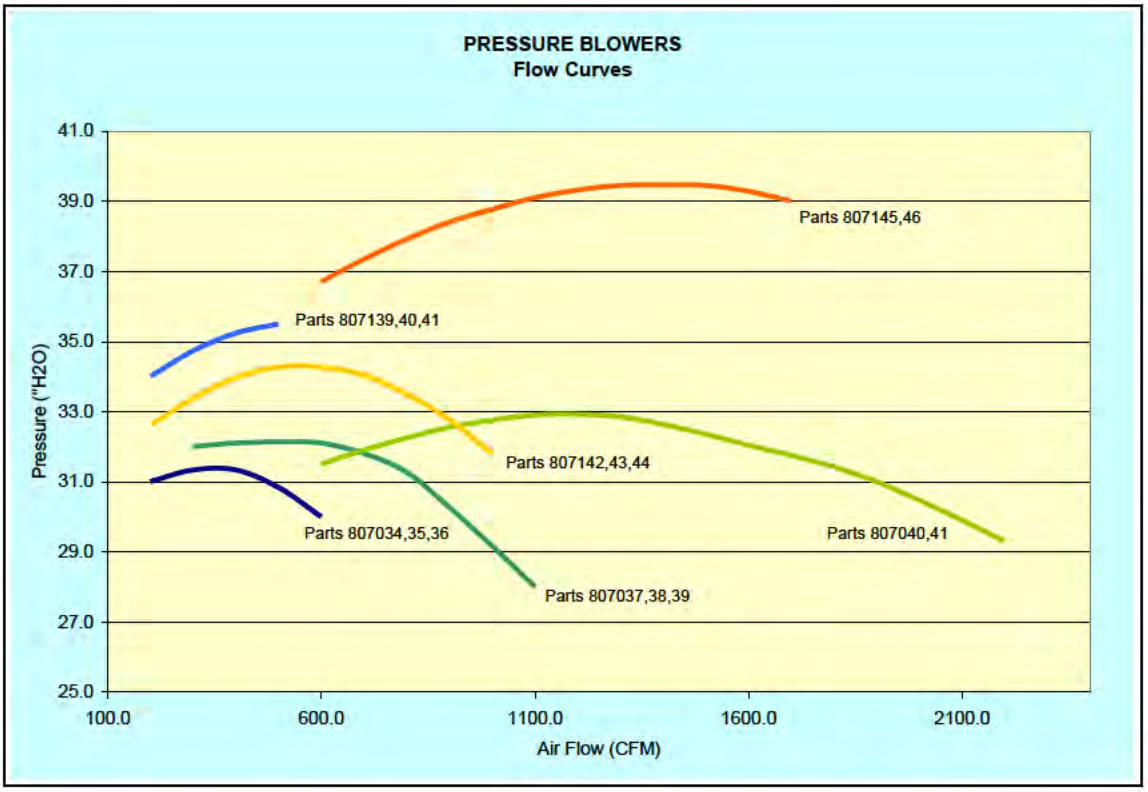

REV 010122 Copyright 2001 QED

SECTION 0200
ENGINEERING SPECIFICATION: CONTROL PANEL

PART 1— GENERAL

1.1 SCOPE

1.1.1 Manufacturer shall furnish an industrial control panel for use with a ground water treatment system.

1.2 DESCRIPTION

1.2.1 The control panel controls all motor-driven and other electrically operated equipment comprising the remediation system. The various components are fully interlocked for fail-safe operation. The operation of all driven components can be manually overridden for equipment startup or troubleshooting. The status of all components and alarms is indicated via illuminated devices located on the door of the enclosure, or on the swing-out panel of dead-front panels.

1.3 SUBMITTALS

1.3.1 Manufacturer shall submit the following with the bid:

1.3.1.1 Product data for selected model, including standard features, options, and warranty coverage. See attached Data Sheet for full specification.

PART 2 — PRODUCTS

2.1 GENERAL

2.1.1 System shall be manufactured by QED Environmental Systems, Inc. and represented by _____ or pre-approved equivalent.

2.1.2 Control panel design and performance shall meet requirements specified on the attached Data Sheet.

2.2 EQUIPMENT DESIGN REQUIREMENTS

2.2.1 Control panel shall be designed and built to UL508 Industrial Control Panel requirements.

REV 3/13/15 COPYRIGHT 2015 QED

2.2.2 Control panel shall be manufactured in a listed Industrial Control Panel Manufacturing Facility.

2.2.3 Control panel enclosure shall be a Type 4 as required for the application.

2.2.4 Control panel components shall be industrial quality
- IEC style motor starters
- fuses
- transformers
- timing relays
- intrinsically safe components (as required)

2.2.5 Control panel shall include the following list of features as standard equipment:
Control panel transformer (if required)
Green illuminated selector switch for control and run indicator for each motor
Red pilot light for each alarm condition
Main disconnect switch, externally accessible
IEC-style motor starters
Mounting kit
Alarm interlock dry contacts
Intrinsically safe components and circuits if site conditions require

2.2.6 The following options shall be available (see Data Sheet for specifications):
Alarm beacon and/or horn
Blank front panel
Control interlocks for other on-site equipment
Lightning/surge protection
Motor elapsed-time meters
Panel heater

2.3 INSTALLATION

2.3.1 Control panel shall be installed in accordance with manufacturer's recommendations, including but not limited to the following:

2.3.1.1 The control panel shall be installed by a licensed electrician. The National Electrical Code and all applicable state and local codes shall be followed when installing this equipment. This includes but is not limited to any provisions for intrinsically safe or explosion-proof wiring. The installation shall be executed in a neat and workmanlike manner.

REV 3/13/15 COPYRIGHT 2015 QED

2.3.1.2 At no time shall any individual tamper with or change any of the wiring in the control panel without the knowledge and consent of QED personnel. The installer shall only land wires on the field terminals provided and install or remove any jumpers as shown and indicated on the control schematics to achieve proper operation. Any changes made to the panel wiring other than those just mentioned or those approved by QED personnel, in writing, will result in the voiding of any warranty associated with the control panel or any of the connected equipment.

 COPYRIGHT 2015 QED

ENGINEERING DATA SHEET
CONTROL PANELS

REF	ITEM	SPECIFICATION(S)
1.3.1.1	GENERAL PRODUCT DATA	
	Model No.	None (each panel is custom manufactured)
	Panel size:	24"H x 24"W x 12"D to 48"H x 36"W x 12"D (approximate size of typical panel for stripper; panels for larger multi-pump systems can be larger)
	Site classification:	❒ Class I, Division 1 ❒ Class I, Division 2 ❒ Unclassified
	Site power:	_____ V _____ Hz _____ Ph
	Motors in system:	

Qty	HP	Voltage	Phase	Where used (i.e. pump, blower)

Interlock w/other equipment: (i.e., catalytic oxidizer, SVE, etc.)	❒ Yes ❒ No _____ Equipment type
Remote mount:	❒ Yes ❒ No
2.2.6 Options:	Alarm beacon Check if included ❒ Alarm horn Check if included ❒ Blank front panel Check if included ❒ Lightning/surge protection Check if included ❒ Motor elapsed-time meter (_____ hours x _____) Check if included ❒ Panel heater (_____ watts, w/thermostat) Check if included ❒

 COPYRIGHT 2015 QED

SECTION 0401
ENGINEERING SPECIFICATION: PROCESS SENSORS (AIR STRIPPER SYSTEM)

PART 1— GENERAL

1.1 SCOPE

1.1.1 The manufacturer shall furnish process sensors for use in an air stripper system.

1.2 PROCESS DESCRIPTION

1.2.1 Differential pressure switches, gauges, liquid level sensors, liquid flow sensors, and air flow sensors are installed at appropriate points in the air stripper process and linked to a control panel to provide system monitoring capabilities and input for automatic control.

1.3 SUBMITTALS

1.3.1 Manufacturer shall submit the following with the bid:

1.3.1.1 Product data for selected models, including operating ranges, materials, electrical specifications, and warranty coverage. See attached Data Sheet for full specifications.

PART 2 — PRODUCTS

2.1 GENERAL

2.1.1 Equipment shall be supplied by QED Environmental Systems, Inc. and represented by _____ or pre-approved equivalent.

2.1.2 Design and performance of all process sensors shall meet requirements listed in this specification and on the attached Data Sheet.

2.2 EQUIPMENT DESIGN REQUIREMENTS

2.2.1 A sump differential pressure gauge shall be provided as standard equipment to monitor air stripper performance and indicate when cleaning is necessary due to fouling of stripper tray orifices. It shall meet the following specifications:

REV 010122 Copyright 2001 QED

2.2.1.1 Gauge shall be diaphragm-actuated dial type, 4 3/4” O.D., with white dial, black graduations, and pointer zero adjustment. Case shall be die cut aluminum with anti-corrosion coating and break-resistant, clear plastic face. Gauge shall operate with an accuracy of plus or minus 2% of full scale over a temperature range of 20° to 140° F. See Data Sheet for working pressure range and other specifications

2.2.2 A sump sight gauge shall be provided as standard equipment, to meet the following specifications:

2.2.2.1 Gauge shall be constructed of clear plastic tube connected to the sump water drain to allow continuous visual sump water level monitoring. See Data Sheet for specifications.

2.2.3 Sump high level switch and discharge pump on/off switch shall be available separately or together as an air stripper system option. (Note: sump high level switch is highly recommended to prevent stripper overflow and blower damage in the event of a drain or discharge pump malfunction.) They shall meet the following specifications:

2.2.3.1 These switches shall be UL and CSA listed, capable of operating with an adjustable liquid level differential, from a minimum of plus or minus 12” or greater. Design shall prevent false tripping due to turbulence. PVC jacketing shall provide a resistance to chemical attack. Mercury switches shall not be used. See Data Sheet for full specifications.

2.2.4 Sump low pressure and high pressure switches shall be available as air stripper system options. (Note: low pressure switch is highly recommended to provide process system shutdown in the event of blower or gasket failure.) They shall meet the following specifications:

2.2.4.1 These switches shall be diaphragm operated, explosion-proof differential pressure switches, UL and CSA listed, approved for use in Class I Groups C and D, Class II Groups E, F and G, and Class III hazardous atmospheres. See Data Sheet for full specifications.

2.2.5 An air flow indicator shall be available as a system option, to meet the following specifications:

2.2.5.1 Air flow sensor shall be a Pitot Tube type. Design shall meet AMCA and ASHRAE codes and require no calibration. Construction shall be of type 304 stainless steel.

 Copyright 2001 QED

2.2.5.2 Air flow gauge shall be a differential pressure gauge, diaphragm-actuated dial type, 4-3/4” O.D., with white dial, black graduations, and pointer zero adjustment. Case shall be die cut aluminum with anti-corrosion coating and break-resistant, clear plastic face. Gauge shall operate with an accuracy of plus or minus 2% of full range over a temperature range of 20° to 140° F. See Data Sheet for working pressure range and other specifications.

2.2.6 A liquid flow meter shall be available as a system option. Liquid flow meter shall be either an in-line electronic meter with digital readout or a mechanical nutating disc meter, to meet the following specifications:

2.2.6.1 Electronic meter shall sense the rotation of an internal turbine and convert it into flow measurements via an on-board microprocessor. It must be capable of accuracy to within plus or minus 1.5%. Flow shall be displayed on a 6-digit LCD panel, with operation accessed via two buttons. See Data Sheet for specifications.

2.2.6.2 A nutating disc meter shall measure flow via positive displacement; it must be accurate to within plus or minus 1.5% over full range, with an extended 50:1 flow range. Housing shall be of bronze, with only three moving parts to simplify maintenance. See Data Sheet for full specifications.

REV 010122 Copyright 2001 QED

ENGINEERING DATA SHEET
PROCESS SENSORS (AIR STRIPPER SYSTEM)

REF	ITEM	SPECIFICATION(S)
2.2.1.1	Pressure gauge	
	Model No.:	EZPGAUGE
	Operating pressure range:	0-50" H_2O
	Minor divisions:	1.0" H_2O
	Pressure connections:	1/8" NPT female
2.2.2.1	Sump site gauge:	
	Water drain connection:	1" NPT
2.2.3.1	Sump high level switch, pump on/off switch	
	Model No.:	800065
	Electrical contact capacity:	15A, 120/250 VAC, 50/60 Hz
	Wetted materials:	Body — polypropylene
		Electric power cable — PVC
2.2.4.1	Sump low pressure switch, sump high pressure switch	
	Model Nos.:	EZPLOW, EZPHIGH
	Operating pressure ranges:	Low = 0.4-1.6" H_2O
		High = 0.5-2.0 PSI
	Electrical rating:	15A, 125/250/480 VAC, 60 Hz
	Wiring connections:	3 screw type; common, norm. open, norm. closed
	Pressure connections:	1/8" NPT female
2.2.5.1	Air flow sensor	
	Model No.:	EZ-AIRFLOW; Pitot-type
	Tube diameter:	1/8"
	Insertion length:	variable

2.2.5.2 Air flow gauge

Model Number	Used On Stripper	Nominal Air Flow (cfm)	Stack Diam. (in)	Nominal Air Velocity (fpm)	Range (" H_2O)
2000-00AV	2.XP	140	4	1604	0-0.25
2001AV	4.XP	260	4	2979	0-1
2000-0AV	4.X	210	4	2406	0-0.5
2000-00AV	6.X	320	6	1630	0-0.25
2000-0AV	8.X	420	6	2139	0-0.5
2001AV	12.X	600	6	3056	0-1
2002AV	16.X	850	6	4329	0-2
2001AV	24.X	1300	8	3724	0-1

(Note: indicate stripper model number for this specification.)

REV 010122 Copyright 2001 QED

2.2.6.1 Electronic liquid flow meter:

Meter Model No.	Stripper GPM	Meter I.D.(in)	Meter connections	Power supply
CPFLOW50	3-50	1	NPT female	2 internal Lithium batteries*
CPFLOW300	30-300	2	NPT female	2 internal Lithium batteries*

*Minimum actual run time = 4,000 hours

2.2.6.2 Mechanical liquid flow meter

Meter Model No.	Meter Size (in)	Flow Range (GPM)	End Connections	Max. pressure Loss (PSI)
805011	5/8	1/2-25	1/2” NPT-male	15
805012	3/4	1/2-30	3/4” NPT-male	15

REV 010122 Copyright 2001 QED

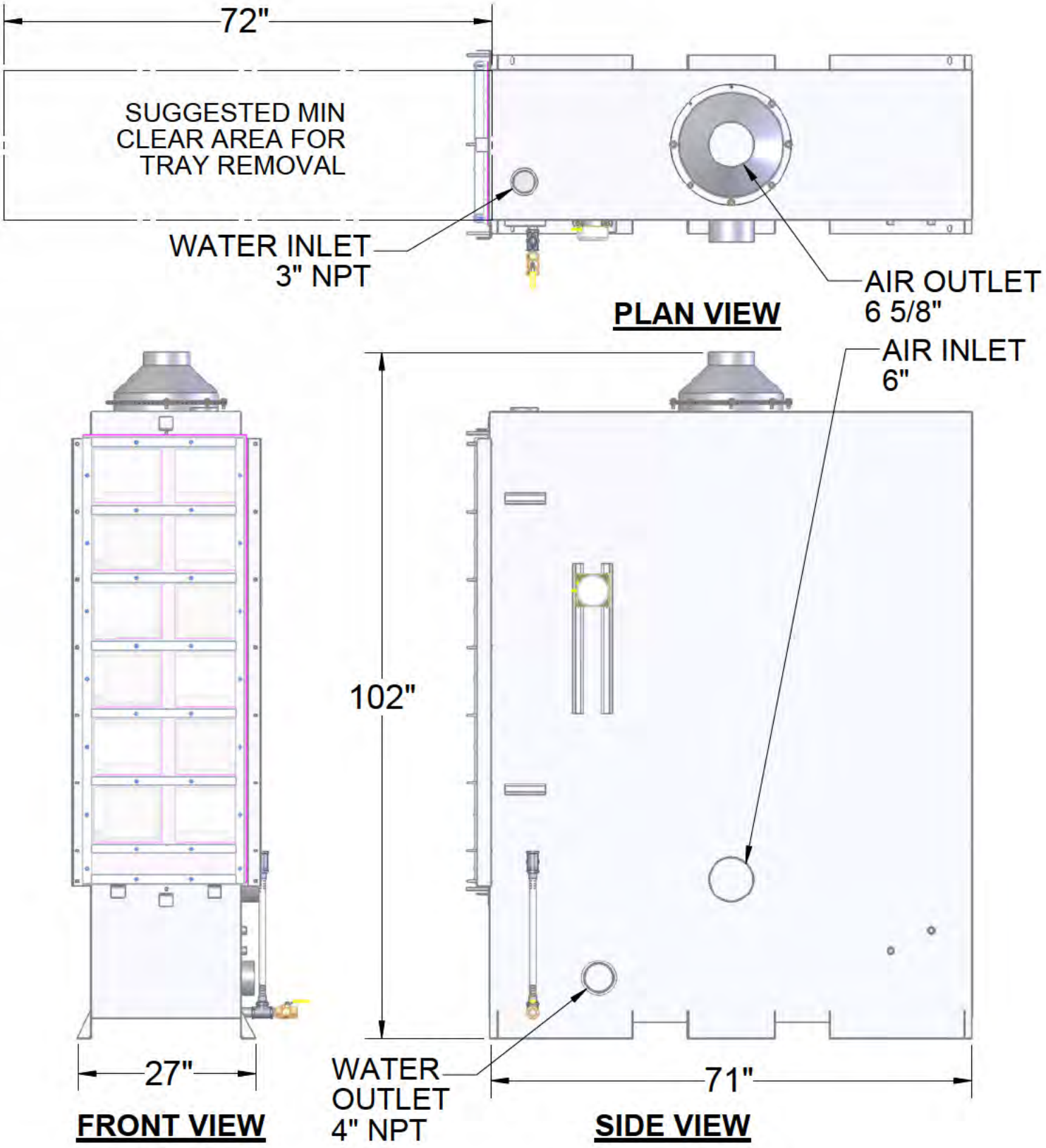

EZ-12.6SS (AIR STRIPPER ONLY)

FOR MORE SPECIFICATIONS CLICK ON:

http://www.qedenv.com/Products/Airstrippers_VOC_Removal/Air_Stripper_Specifications/

NOT TO SCALE

NOT FOR CONSTRUCTION, FOR REFERENCE ONLY

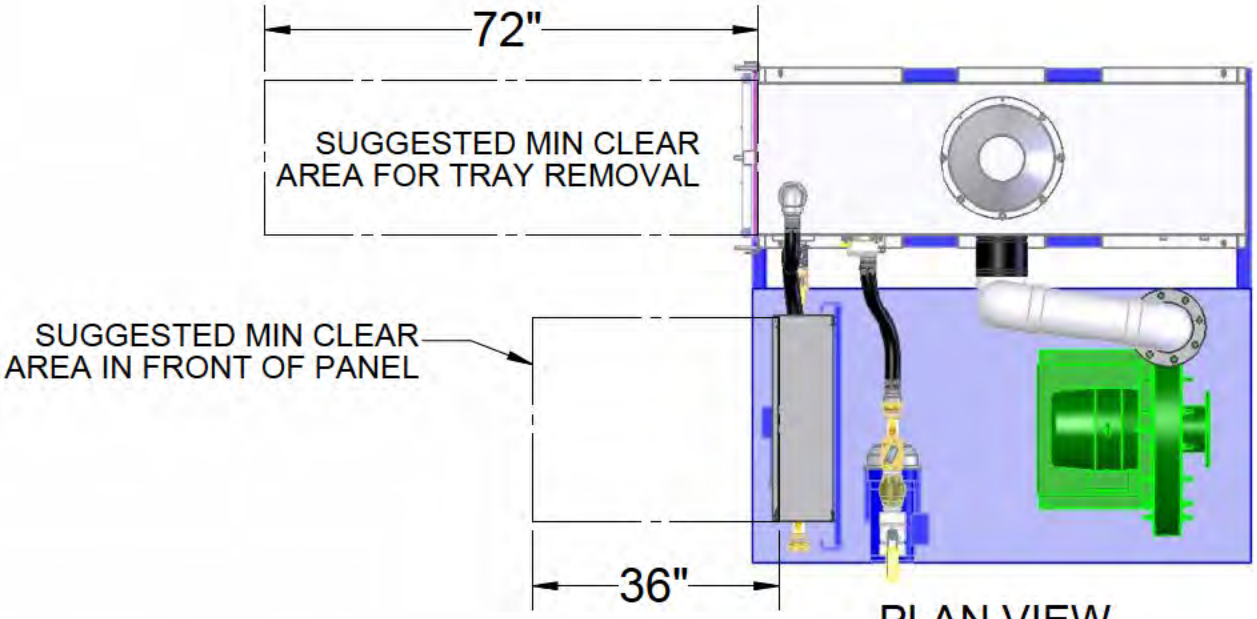

PLAN VIEW

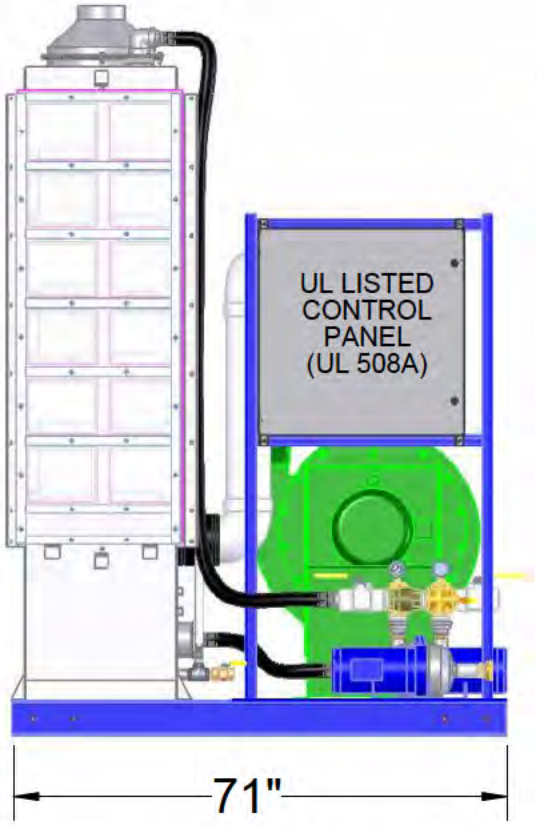

FRONT VIEW

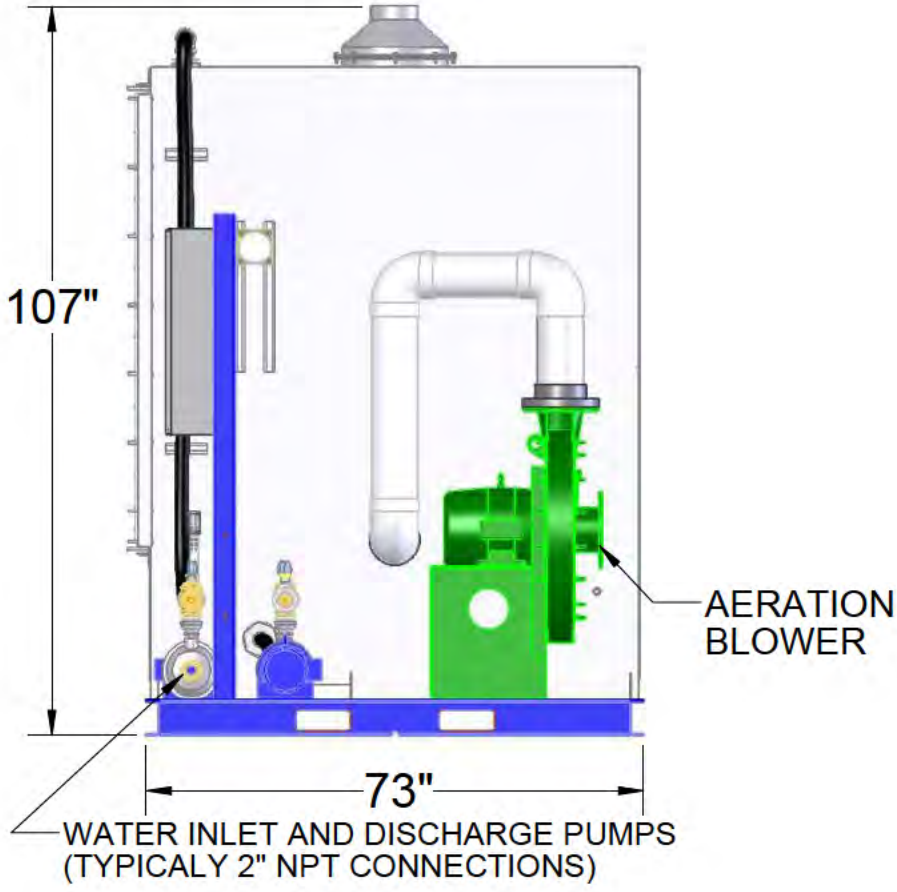

SIDE VIEW

EZ-12.6SS

EXAMPLE OF A SKID SYSTEM WITH CONTROL PANEL, PUMPS, AND BLOWER
CONTACT QED FOR INFORMATION ON ALL OPTIONS.
NOT TO SCALE

NOT FOR CONSTRUCTION, FOR REFERENCE ONLY

Appendix D – Bag Filter Specification Sheets

FILTRATION SPECIFICATIONS

Filter: Model 8 Basket Strainers and Bag Filters

Model 8 strainer/filter housings are made in 2 sizes and 2 pressure ratings, and can serve as basket strainers (for particle retention down to 74 micron size) or as bag filters (for particle retention down to 1 micron size).



FEATURES

- Low pressure drops
- Permanently piped housings
- Covers are o-ring sealed
- Carbon steel, 304 or 316 stainless steel construction
- All housings are electropolished to resist adhesion of dirt and scale
- Adjustable-height legs
- Large-area, heavy-duty baskets
- O-ring seals: Buna N, EPR, Fluoroelastomer, PTFE
- Two pressure ratings: 150 and 300
- Pipe sizes 2-inch to 4-inch, NPT or flanged
- Two basket depths: 15 or 30 inches (nominal)
- ASME code stamp available

OPTIONS

- Duplex Units Available
- Special Alloys
- Sanitary Construction
- Different Outlet Connections
- Higher Pressure Ratings
- Extra-Length Legs
- Heat Jacketing
- Liquid Displacers for Easier Servicing
- NSF 61 Certified

OPERATION

Unfiltered liquid enters the housing above the bag or basket and flows through. Solids are contained inside the bag or basket, where they are easily removed when the unit is serviced. A basket bail is pushed down by the closed cover to hold the basket against a positive stop in the housing. A radial seal prevents bypass of unfiltered liquid.

©2019 Rosedale Products Inc. • 3730 West Liberty Road - Ann Arbor, MI 48103 • Phone: 734.665.8201 • Fax: 734.665.2214 • RosedaleProducts.com

FILTRATION SPECIFICATIONS

Filter: Model 8 Basket Strainers and Bag Filters

PRESSURE DROP DATA

Basket strainers and bag filters are usually selected so that the pressure drop does not exceed 2 psi when they are clean. Higher pressure drops may be tolerated when contaminant loading is low. Bag change-out should occur at 15 psid.

The pressure drop data is determined by the steps below:

FOLLOW THESE EASY STEPS:

1. Using the desired pipe size and approximate flow rate, determine the pressure drop from the appropriate graph.
2. Multiply the pressure drop obtained in step 1 by the viscosity correction factor found in the accompanying table. This is the adjusted pressure drop for all baskets, without filter bags.
3. Add the pressure drop for the bag filter housing.

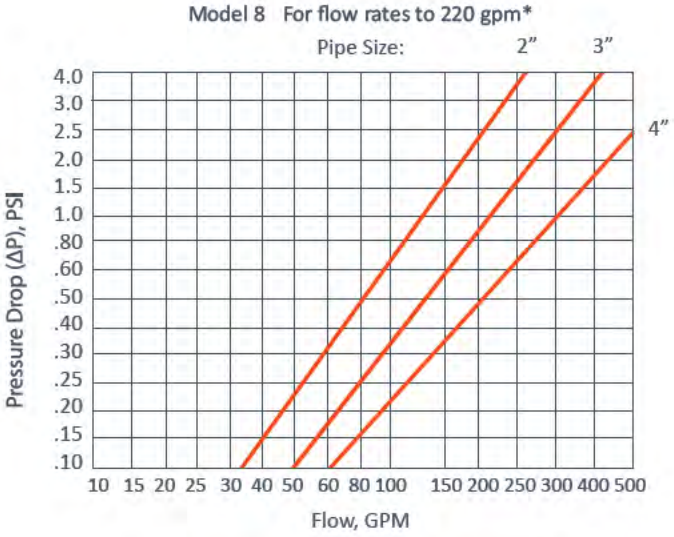

*Based on housing only. Fluid viscosity, bag filter used, and expected dirt loading should be considered when sizing a filter.



Eyenut covers with filter bag or basket.

Filter bags are specified and sold separately.

	VISCOSITY, CPS								
BAG STYLE	1 (H_2O)	50	100	200	400	600	800	1000	2000
ALL UNLINED BASKETS	.65	.85	1.00	1.10	1.20	1.40	1.50	1.60	1.80
40-MESH LINED	.73	.95	1.20	1.40	1.50	1.80	1.90	2.00	2.30
60-MESH LINED	.77	1.00	1.30	1.60	1.70	2.10	2.20	2.30	2.80
80-MESH LINED	.93	1.20	1.50	1.90	2.10	2.40	2.60	2.80	3.50
100-MESH LINED	1.00	1.30	1.60	2.20	2.40	2.70	3.00	3.30	4.40
200-MESH LINED	1.30	1.70	2.10	3.00	3.40	3.80	4.40	5.00	6.80

Model 8 - Dimensions

COVER TYPE

Eyenut Cover
150 PSIG - 3 Bolt Design

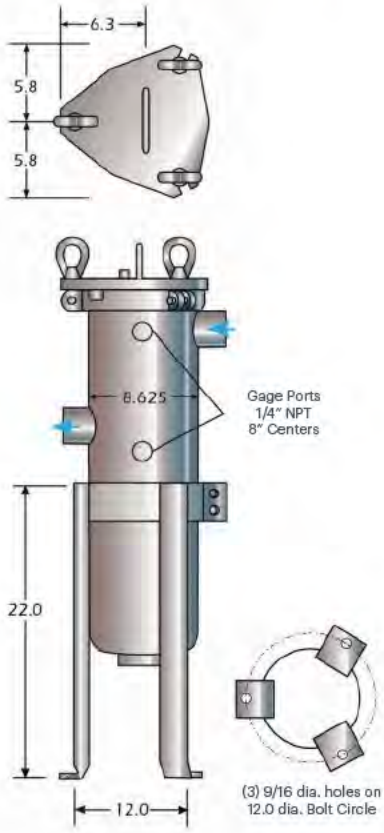

A clearance distance equal to the basket depth must be available above the housing for basket removal.

OUTLET STYLES

Threaded NPT or
Flanged Connections

STYLE 1

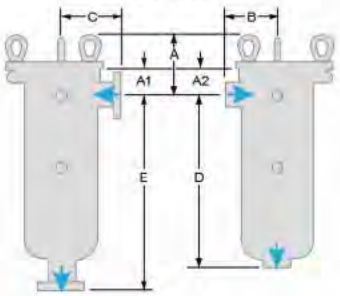

STYLE 2

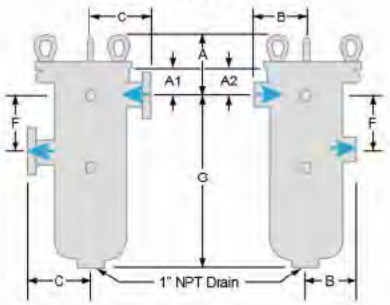

STYLE 3

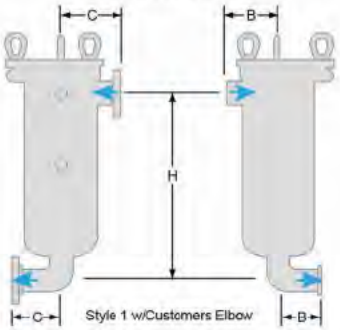

STYLE 4

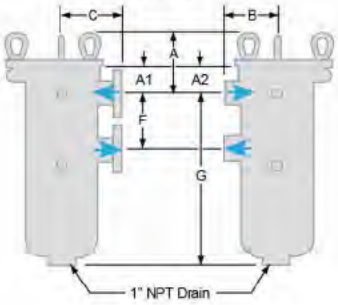

STYLE D

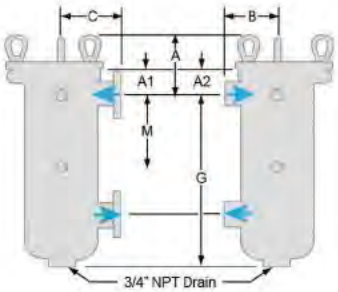

Dimensions (IN) 150 PSIG Design

Model	Pipe Size	A	A1	A2	B	C	D	E	F	G	H	I	J	K	L	M
8-15	2	9.1	5.4	2.9	5.9	7.5	20.6	23.4	8.0	20.9	22.8	3.25	5.0	4.06	4.25	N/A
	3	9.1	5.4	3.7	6.8	7.5	21.3	23.4	8.0	20.9	24.3	3.25	7.25	6.12	4.25	N/A
	4	9.1	5.4	5.0	6.8	8.6	21.3	23.9	8.0	20.9	25.6	3.25	9.0	7.75	4.25	N/A
8-30	2	9.1	5.4	2.9	5.9	7.5	35.6	38.4	8.0	35.9	37.8	3.25	5.0	4.06	4.25	15.0
	3	9.1	5.4	3.7	6.8	7.5	36.3	38.4	8.0	35.9	39.3	3.25	7.25	6.12	4.25	17.0
	4	9.1	5.4	5.0	6.8	8.6	36.3	38.9	8.0	35.9	40.6	3.25	9.0	7.75	4.25	18.0

Dimensions are for reference only and should not be used for hard plumbing. Request a drawing from filters@rosedaleproducts.com

Model 8 - Dimensions

COVER TYPE

Eyenut Cover
300 PSIG - 6 Bolt Design

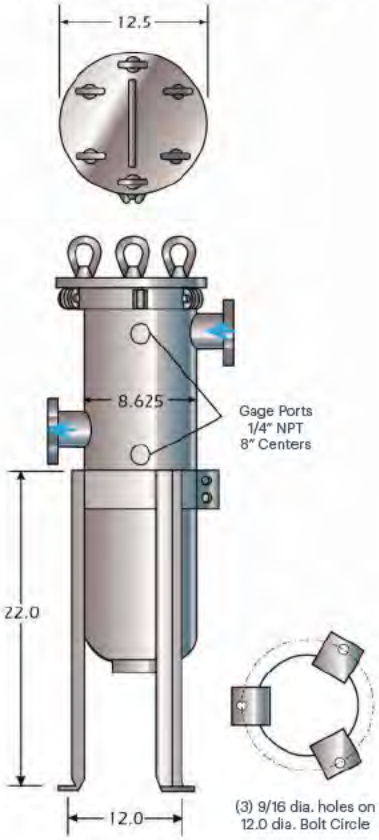

A clearance distance equal to the basket depth must be available above the housing for basket removal.

OUTLET STYLES

Threaded NPT or
Flanged Connections

STYLE 1

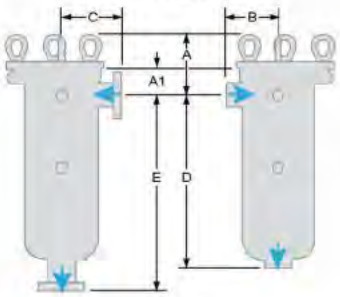

STYLE 2

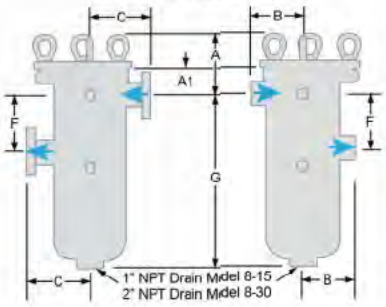

STYLE 3

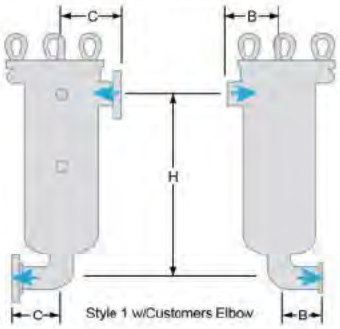

STYLE 4

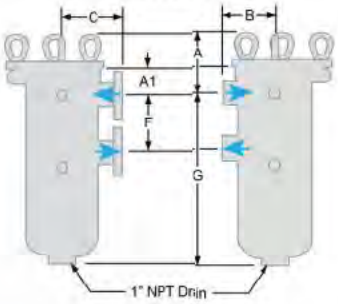

STYLE D

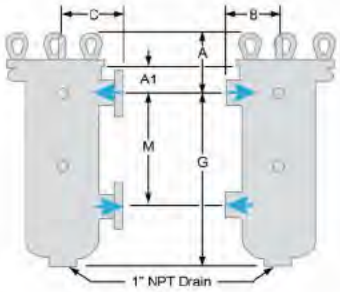

Dimensions (IN) 300 PSIG Design

Model	Pipe Size	A	A1	B	C	D	E	F	G	H	I	J	K	L	M
8-15	2	9.25	5.4	5.9	7.5	20.6	23.4	8.0	20.9	22.8	3.25	5.0	4.06	4.25	N/A
	3	9.25	5.4	6.8	7.5	21.3	23.4	8.0	20.9	24.3	3.25	7.25	6.12	4.25	N/A
	4	9.25	5.4	6.8	8.6	21.3	23.9	8.0	20.9	25.6	3.25	9.0	7.75	4.25	N/A
8-30	2	9.25	5.4	5.9	7.5	35.6	38.4	8.0	35.9	37.8	3.25	5.0	4.06	4.25	15.0
	3	9.25	5.4	6.8	7.5	36.3	38.4	8.0	35.9	39.3	3.25	7.25	6.12	4.25	17.0
	4	9.25	5.4	6.8	8.6	36.3	38.9	8.0	35.9	40.6	3.25	9.0	7.75	4.25	18.0

Dimensions are for reference only and should not be used for hard plumbing. Request a drawing from filters@rosedaleproducts.com

Model 8 Housing Code - How to Order

CONFIGURE YOUR PART NUMBER (EXAMPLE: 8-30-3P-1-300-C-B-S-M20-D-C-NSF)

A	B	C	D	E	F	G	H	I	J	K	L	M
MODEL NUMBER	HOUSING SIZE	PIPE SIZE	OUTLET STYLE	PRESSURE RATING	HOUSING MATERIAL	COVER SEAL	BASKET SEAL	BASKET TYPE	BASKET, MEDIA SIZE	DISPLACER	ASME CODE STAMP	NSF 61 CERTIFIED

A	MODEL NUMBER	CODE
	EYENUT COVER	8

B	HOUSING SIZE	CODE
	15 INCH	15
	30 INCH	30

C	PIPE SIZE, NPT AND FLANGED[1]	CODE
	2-IN NPT OR FLANGE	2P / 2F
	3-IN NPT OR FLANGE	3P / 3F
	4-IN FLANGE	4F

D	OUTLET STYLE	CODE
	BOTTOM	1
	SIDE HIGH	2
	BOTTOM ELBOW	3
	SAME SIDE HIGH	4
	SAME SIDE LOW	D

E	PRESSURE RATING[1]	CODE
	150 PSI	150
	300 PSI	300

F	HOUSING MATERIAL	CODE
	CARBON STEEL	C
	304 STAINLESS STEEL	S
	316 STAINLESS STEEL	S316

G	COVER SEAL	CODE
	BUNA N	B
	ETHYLENE PROPYLENE	E
	FLUOROELASTOMER	V
	FKM/FEP	TEV
	PTFE (SOLID WHITE) (6 BOLT COVER)	TSW

H	BASKET SEAL	CODE
	SEAL REQUIRED	S

I	BASKET TYPE	CODE
	FILTER BAG BASKET, 9/64 PERFORATIONS[2]	PB
	STRAINER BASKET, PERFORATED METAL	P
	FILTER BAG BASKET, PERFORATED, MESH LINED[2]	BM
	STRAINER BASKET, PERFORATED, MESH LINED	M
	FSI/POLYLOC	POLY

J	BASKET, MEDIA SIZE	CODE	
	NO SYMBOL FOR PB BASKET		
	PERFORATION DIAMETERS (P BASKETS)	PERF SIZES	MESH SIZES
		1/4	20
		3/16	40
	MESH SIZES (M AND BM BASKETS)	9/64	60
		3/32	80
		1/16	100

K	DISPLACER	CODE
	DISPLACER	D

L	ASME CODE STAMP	CODE
	CODE STAMP	C

M	NSF 61 CERTIFIED	CODE
	NSF 61	NSF

1. Higher pressure ratings and alternative connections available. Consult factory.
2. Filter bags are specified separately.

Appendix E – Liquid Phase Activated Carbon Specification Sheets

PRODUCT DATA

HPAF SERIES FILTERS

HPAF series filters are designed to treat liquid streams in a wide variety of adsorption applications. The modular design enables the units to easily fit into a wide variety of installations. Standard features include steel construction with epoxy internal coating, efficient internal collector array, forklift skid and lifting eyes.

A wide variety of options and contact medias are available, con-

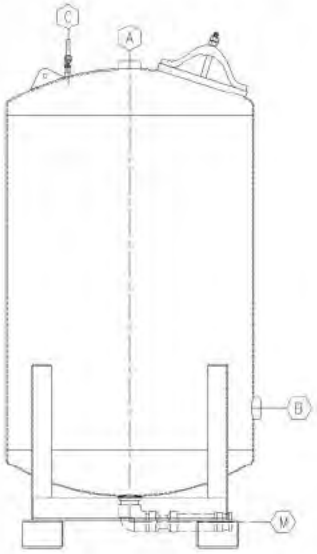

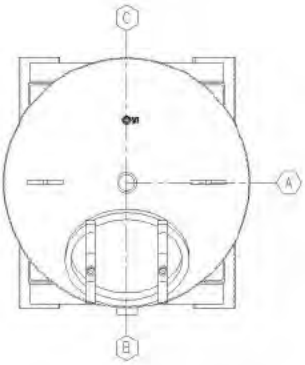

A - Process Inlet
B - Process Outlet
C - Vent
M - Carbon Discharge (Not standard on all mod-



Standard Model Shown - Detailed Submittal Drawings Available

HPAF SERIES STANDARD SPECIFICATIONS

Model Number	HPAF-500	HPAF-1000	HPAF-2000	HPAF-3000	HPAF-5000	HPAF-10,000	L10
Overall Height	5'11"	7'2"	8'6"	8'11"	9'11"	10'9"	15'10"
Diameter	30"	36"	48"	60"	72"	96"	120"
Process Connection	2" FNPT	2" FNPT	3" FNPT	3" FNPT	4" FNPT	6" FLNG	8" FLNG
Typical GAC Fill (28#/FT³)	500 Lbs	1,000 Lbs	2,000 Lbs	3,000 Lbs	5,000 Lbs	10,000 Lbs	20,000 Lbs
Shipping Weight (empty)	350 Lbs	535 Lbs	1,020 Lbs	1,525 Lbs	2,490 Lbs	3,800 Lbs	7,250 Lbs
Operational Weight	1,700 Lbs	3,300 Lbs	6,800 Lbs	10,700 Lbs	17,900 Lbs	31,200 Lbs	68,400 Lbs
Optimal Water Flows at standard conditions	8-25 GPM	10 to 35 gpm	15 to 70 gpm	25 to 120 gpm	35 to 165 gpm	60 to 300 gpm	100 to 480 gpm
Available Bed Volume	20 FT³	35 FT³	75 FT³	117 FT³	196 FT³	400 FT³	780 FT³
Maximum Pressure	75 PSIG	75 PSIG	75 PSIG	75 PSIG	75 PSIG	75 PSIG	75 PSIG
Maximum Vacuum	28" Hg	28" Hg	28" Hg	28" Hg	28" Hg	28" Hg	28" Hg

Appendix F – Contained-In Determination Request and IEPA Approval Response

AECOM
100 Nor h Broadway
20th Floor
St. Louis, MO 63102
aecom.com

March 2, 2022

Mr. Bill Sinnott, PE
Senior Engineer
Illinois EPA
BOL, Permit Section #33
1021 North Grand Ave East
Springfield, IL 62794

Contained-In Determination Request Form
Pretreatment Water Management
Roxana, Illinois
1191150002 - Madison County
Log No. PS22-007

Dear Mr. Sinnott:

AECOM Technical Services, Inc. (AECOM), on behalf of Equilon Enterprises LLC d/b/a Shell Oil Products US (Shell), previously submitted information requesting a contained-in determination for groundwater generated during upcoming proposed remediation activities at the Roxana Public Works Yard. This submittal is submitting the Contained-In Determination Request Form that was inadvertently left out of the previous submittal (Log No. PS22-007). Also enclosed herein is a full copy of the previous submittal for completeness and reference.

If you have additional questions or comments regarding this information, please do not hesitate to contact me at wendy.pennington@aecom.com or (314) 452-8929.

Sincerely,



Wendy Pennington, PE
Project Manager
AECOM
M: 314-452-8929
E: wendy.pennington@aecom.com

Enclosures: Contained-In Determination Request Form
Contained-In Determination for Pretreatment Water Management (Log No. PS22-007) dated 2/21/22

Cc: Leroy (Buddy) Bealer, SOPUS
Repositories (Roxana website, Roxana Public Library)
Project File

CONTAINED-IN DETERMINATION REQUEST FORM

I. Introduction / Purpose

The owner/ operator identified below requests Illinois EPA's concurrence with their contained-in determination that the soil, subject to this request, contaminated with a listed hazardous waste at their site identified below meets all of the following conditions and therefore, would no longer be considered to contain a listed hazardous waste and may be managed as a non-hazardous waste:

a. The contaminated soil does not exhibit any of the characteristics of a hazardous waste as set forth in 35 IAC 721, Subpart C,

b. The contaminated soil meets the land disposal restrictions (LDRs) at 35 IAC 728.149, including the standards for all underlying hazardous constituents (UHCs) that may be present, and

c. The contaminated soil will be disposed of in a nonhazardous waste landfill permitted under 35 IAC 813 which meets the design requirements at 35 IAC 811, or an on-site nonhazardous waste landfill that meets the design requirements of 35 IAC 811.

d. The contaminated soil is manifested to the nonhazardous waste landfill as a special waste.

II. Site Identification (type or print)

IEPA Bureau of Land ID No.:	**1191150002**
Facility Name:	**Roxana Public Works Yard** **Equilon Enterprises LLC d/b/a Shell Oil Products US**
Facility Contact Name:	**Wendy Pennington (AECOM Technical Services, Inc.)**
Street Address:	**100 North Broadway, 20th Floor**
City, State, Zip Code:	**St. Louis, MO 63102**
Latitude: **Longitude:** **(to five decimal places: 90.12345N, 40.67890W)**	**38.84199** **-90.07695**
Facility Contact Phone No:	**314-452-8929**
Facility Contact E-Mail:	**wendy.pennington@aecom.com**

III. Owner and Operator Information (type or print)

Site Owner:	**Village of Roxana**
Owner Contact Name:	**Marty Reynolds**
Street Address:	**310 North Central Ave**
City, State, Zip Code:	**Roxana, IL 62048**
Owner Contact Phone No.:	**618-254-0345**
Owner Contact E-Mail:	**mreynolds@roxana-il.org**

Site Operator (if different from owner):	**Equilon Enterprises LLC d/b/a Shell Oil Products US**
Operator Contact Name:	**Leroy (Buddy) Bealer**
Street Address:	**128 East Center Street**
City, State, Zip Code:	**Nazareth, PA 18064**
Operator Contact Phone No.:	**484-632-7955**
Operator Contact E-Mail:	**leroy.bealer@shell.com**

IV. Information Submitted in Support of the "Contained-In Determination"

The following information must be attached to this form:

a. A brief history of the site and its previous operations, whether it is enrolled in the Site Remediation Program (SRP), and the reason for the Contained-In Determination request. [**See Letter dated February 21, 2022 (PS22-007)**]

b. A description of the remediation activities at the site, and provide an estimate of the amount (cubic yards) of contaminated soil that is the subject of this request. [**See Letter dated February 21, 2022 (PS22-007)**]

c. An identification of the process/source of the listed hazardous waste(s) generated or managed at the facility and all applicable hazardous waste codes. [**See Letter dated February 21, 2022 (PS22-007)**]

d. Analytical results demonstrating that the contaminated soil to be shipped to the non-hazardous waste landfill does not exhibit a characteristic of a hazardous waste, and meets the Land Disposal Restrictions (LDRs) at 35 IAC 728.149, including the standards for all underlying hazardous constituents (UHCs) that may be present.
[**See Letter dated February 21, 2022 (PS22-007)**]

e. A scaled drawing of the facility showing all structures, the extent of the contaminated soil subject to this request, sample locations (and depths) that are representative of the contaminated soil that is subject of this request. [**See Letter dated February 21, 2022 (PS22-007)**]

The above information should be provided in a logical and organized fashion. Please identify the attachment number where the information addressing each item above is presented.

V. Signatures

Certification Statement

I certify under penalty of law that this document and all attachments were prepared under my direction or supervision in accordance with a system designed to assure that qualified personnel properly gather and evaluate the information submitted. Based on my inquiry of the person or persons that manage the system, or those persons directly responsible for gathering the information, the information submitted is, to the best of my knowledge and belief, true, accurate, and complete. I am aware that there are significant penalties for submitting false information, including the possibility of fine and imprisonment for knowing violations.

Any person who knowingly makes a false, fictitious, or fraudulent material statement, orally or in writing to the Illinois EPA commits a Class 4 felony. A second or subsequent offense after conviction is a Class 3 felony. (415 ILCS 5/44(h))

Signature of Owner or Operator of Facility

Signature: _____ Date: 2/25/2022

Print/Type Name: Leroy Bealer

Print/Type Title: Senior Program Manager

___ Owner, or _X_ Operator. (check one)

(*last revised 11-8-2019*)

AECOM
100 Nor h Broadway
20th Floor
St. Louis, MO 63102
aecom.com

February 21, 2021

Mr. Rob Watson, PE
Senior Engineer
Illinois EPA
BOL, Permit Section #33
1021 North Grand Ave East
Springfield, IL 62702

Contained-In Determination
Pretreatment Water Management
Roxana, Illinois
1191150002 - Madison County
Log No. B-34R

Dear Mr. Watson:

AECOM Technical Services, Inc. (AECOM), on behalf of Equilon Enterprises LLC d/b/a Shell Oil Products US (SOPUS), is submitting a determination that environmental media generated during remediation activities at the Roxana Public Works Yard (Site) may not contain hazardous waste.

EPA's "contained-in" policy states that contaminated environmental media is subject to all applicable RCRA requirements until they no longer contain hazardous waste. EPA considers contaminated environmental media to no longer contain hazardous waste when:

- It no longer exhibits a characteristic of hazardous waste, or
- Concentrations of listed hazardous waste are below health-based levels.

Once these requirements are met, the environmental media is not subject to RCRA requirements. The groundwater generated at the Site during operation of the proposed Steam Enhanced Extraction (SEE) system is expected to meet these criteria after treatment in the proposed SEE's system groundwater treatment unit. Therefore, AECOM believes the environmental media will no longer contain hazardous waste after treatment.

The following paragraphs provide further information:

Name, address, phone number of property owner

The Site is located south of East 8th Street between Chaffer Avenue and Old Edwardsville Road in Roxana, Illinois. The Site is owned by the Village of Roxana:

Marty Reynolds, Mayor
Village of Roxana
143 East 8th Street
Roxana, IL 62084
618-254-1951

Name, address, phone number of operator (if different than owner)

AECOM, on behalf of SOPUS, will be the operator of the proposed SEE system at the Site. Contact information is presented below:

Mr. Leroy (Buddy) Bealer
Principal Program Manager
Shell Oil Products US
128 East Center St
Nazareth, PA 18064
(484) 632-7955

Mrs. Wendy Pennington
Project Manager
AECOM
100 North Broadway
20th Floor
St. Louis, MO 63102
314-452-8929

Facility name and Bureau of Land ID number for the site

Roxana Public Works Yard

BOL ID# 1191150002

Brief history of the site and its previous operations, whether it is enrolled in the Site Remediation Program (SRP), and the reason for the Contained-In Determination request

The Site is located to the east of a 1986 benzene pipeline release located northwest of the intersection of Rand Avenue and Route 111, and to the west of the Wood River Refinery (WRR) North Property West Fenceline. The Site is managed under the Corrective Action section of the SOPUS RCRA Part B Hazardous Waste Post-Closure Permit at the Wood River Refinery (Permit) most recently modified December 20, 2019. The Site is not enrolled in the SRP.

The Roxana Public Works Yard occupies approximately 2.4 acres, where approximately 0.4 acres is covered or obstructed by buildings and/or structures. Topographically, the western and southern portions of the Site are at a lower elevation relative to the northeastern portion, with a relief of approximately 13 feet. The Site is infrequently used by the Village of Roxana for vehicle maintenance and storage. Most of the Site is enclosed by a chain link fence.

AECOM, on behalf of SOPUS, has conducted several subsurface investigations at the Public Works Yard and began quarterly groundwater monitoring in 2010. These investigations indicated dissolved-phase benzene concentrations ranging from 100 mg/L to 1,900 mg/L. In 2011, a Soil Vapor Extraction (SVE) system compound was constructed on the neighboring WRR North Property, which includes a header-line connecting to six extraction wells at the Site. There are also eight multilevel vapor monitoring points (VMPs) and two groundwater monitoring wells at the Site. The SVE system has operated at the Site since late 2012. Soil vapor data from the Site demonstrates the shallow and intermediate zones have been remediated. Deep (>25 feet below ground surface) soil gas concentrations have also decreased over time but remain elevated in some areas with fluctuating groundwater levels and submerged impacts. The proposed SEE system at the Site is utilizing a more aggressive remedial technology to reduce the highest benzene concentrations observed at the Site.

AECOM is requesting that IEPA concur with this “contained-in” determination so the groundwater generated from the proposed SEE system can be managed as nonhazardous waste and treated at a nearby publicly owned treatment works (POTW).

Description of remediation activities at the site, the units involved, how they are regulated, and an estimate of the amount (gallons) and generation rate of contaminated water that is the subject of this request

The Steam Enhanced Extraction system can be broken down into three parts: a steam injection system, a multiphase extraction system, and a water treatment system.

The steam injection portion of the system will consist of a steam boiler fed by natural gas meant to convert potable water to steam. Steam will be heated to temperatures that exceed the minimum required temperature to volatize the constituent of concern (benzene) and will be injected via a network of wells spaced on 30-foot centers within the treatment areas.

The multiphase extraction system will extract both liquid and vapor from the treatment areas, where the two phases will be separated, managed, and treated separately. Upon initial extraction, the combined vapor and liquid stream will pass through a 5,000-gallon silt/liquid/vapor knockout tank to separate liquids from vapors. Vapors will then pass through two additional knockouts before being directed to the existing regenerative thermal oxidizer (RTO) located on the adjacent Phillips 66 Wood River Refinery property. Should the RTO experience an upset condition (i.e., power outage), the vapor stream will be directed to two 2,500-lbs sacrificial vapor granular-activated carbon vessels. The

liquid stream will pass through an oil-water separator where any NAPL will be segregated and containerized before the liquid phase passes through an air-stripper. All vapors stripped from the liquid phase at this point will pass through another knockout before combining with the vapor stream being directed to the RTO.

The water treatment portion of the system begins with the aforementioned air-stripper where the liquid phase will then pass through six sets of bag filters, ending with two 2,000 lb liquid-phase activated carbon treatment vessels before it is pumped into a 5,000-gallon storage tank that will then discharge to the Roxana POTW.

It is anticipated that a total 6.8 million gallons of water will be extracted and treated over the duration of the SEE project. This equates to an average of 26 gallons per minute of treated water discharge, given the projected 180 day run time of the SEE system.

Identification of the process/source of the listed hazardous waste(s) generated or managed at the facility and all applicable hazardous waste codes

Since the environmental media contains benzene that potentially originated from a commercial product benzene release, the media (groundwater) may be classified with a U019 listed hazardous waste code with a Land Disposal Restriction (LDR) of 0.14 mg/L. Benzene concentrations contained in the media may exceed 0.5 mg/L, which would cause the media to be a characteristically hazardous waste with a D018 characteristically hazardous waste toxicity code.

Analytical results, or a commitment, that demonstrates the wastewater going to the POTW meets the following conditions: (1) does not exhibit a characteristic of a hazardous waste; (2) meets the LDR at 35 IAC 728 including standards for all underlying hazardous constituents (UHCs) that may be present, and (3) meets the pre-treatment standards for the POTW

Extracted groundwater will be separated from the vapor stream via a knockout prior to being pumped to an oil-water separator, where any NAPL will be segregated. Liquids will then be passed through the following in the order listed: an air-stripper, three pairs of bag filters, and then two 2,000 lb liquid-phase activated carbon treatment vessels. Treated water will then be pumped into a 5,000-gallon equalization tank from which the water can be sampled prior to discharge.

After treatment, the collected groundwater will be analyzed for benzene (constituent of primary concern). If the benzene concentrations in the treated groundwater meet the criterion in Table 1 below, the groundwater will be considered to no longer contain hazardous waste. AECOM will regularly analyze treated groundwater to demonstrate continued effectiveness in meeting the criteria outlined in Table 1 below.

Constituent	Criterion	Source/Logic
Benzene	0.14 mg/L	35 IAC 728 LDR; also satisfies 0.5 mg/L hazardous waste characterization threshold

Scaled drawing of the facility showing all structures, extent of contaminated groundwater subject to this request, sample locations (and depths) that are representative of the contaminated groundwater that is subject to this request

The contaminated groundwater will be extracted by the proposed SEE system from wells screened from 24 to 57 feet below ground surface in the permeable Main Sand aquifer. The locations of the wells are shown on the attached *system layout figure*. The primary zone of impact and focus area for the thermal treatment is located from 34 to 54 feet below ground surface. No groundwater samples will be collected from the Site during active remediation due to safety concerns. Extracted groundwater will be sampled regularly from the 5,000-gallon holding tank, to make sure the water treatment is continually efficient. See the attached figures for SEE system well field layout, well completion drawings, well head construction details, process flow diagram, and process and instrumentation diagram.

AECOM

See the attached *Wastewater Treatment Plant Capacity Increase Village of Roxana* for the existing features currently on the Roxana Public Works Yard Site.

Scaled drawing of the POTW showing all structures, units, property line, and location where the wastewater will be discharged to the POTW

Please see the attached *Wastewater Treatment Plant Chemical Feed Improvements Village of Roxana* for a Scaled Drawing of the Roxana, Illinois POTW.

Verification that the POTW currently has a USEPA approved pretreatment program (including when program was approved)

The Roxana POTW does not currently have any influent pretreatment standards. They primarily process leachate from the local landfill. The Roxana POTW operates under NPDES Permit IL-0077356. The Village of Roxana is currently working on passing a wastewater treatment ordinance.

If you have additional questions or comments regarding this information, please do not hesitate to contact me at wendy.pennington@aecom.com or (314) 452-8929.

Sincerely,

Wendy Pennington, PE
Project Manager
AECOM
M: 314-452-8929
E: wendy.pennington@aecom.com

Enclosures: Figures to support above information

Cc: Leroy (Buddy) Bealer, SOPUS
Repositories (Roxana website, Roxana Public Library)
Project File

LEGEND

- PIPE RACK
- TREATMENT SYSTEM PIPING
- MULTIPHASE EXTRACTION PIPING
- THERMAL INFLUENCE BOUNDARY
- NORFOLK SOUTHERN RAILROAD
- STEAM INJECTION POINT
- MULTIPHASE EXTRACTION WELL
- TEMPERATURE SENSOR
- STEAM TRAP

EIGHTH ST

CHAFFER AVE

Approximate Location of Power and Water Utility Connections

PDP

Power Distribution Panel

Area A

Area B

Equipment Staging Area

GEN

Pump Station

SI-AB4 SI-AA3 SI-AA2 SI-AC5 X-AB4 SI-AB3 X-AA2 SI-AA1 SI-AD6 X-AC5 SI-AC4 T-AB3 SI-AB2 SI-AD5 SI-1C3 T-AB2 SI-AB1 T-AD5 SI-AE6 X-AD5 SI-AD4 X-AC3 SI-AC2 X-AB1 SI-AE5 SI-AD3 T-AC2 SI-AC1 SI-AF6 T-AE5 SI-AE4 SI-AD2 SI-AG7 X-AF6 SI-AF5 X-AE4 SI-AE3 X-AD2 SI-AD1 SI-AH5 X-AG7 SI-AG6 SI-AF4 T-AE3 SI-AE2 X-AF4 SI-AE1 SI-AH7 T-AG6 SI-AG5 SI-AF3 X-AF3 SI-AI8 X-AH7 SI-AH6 X-AG5 SI-AG4 T-AF3 SI-AF2 SI-AI7 SI-AH5 SI-AG3 SI-AJ8 T-AI7 SI-1I6 T-AH5 X-AH5 SI-1H4 X-AJ8 SI-AK8 SI-AJ7 X-AI6 SI-AI5 SI-AK7 SI-AJ6

SI-BH1 SI-BH2 SI-BI3 SI-BI4 SI-BG1 SI-BH2 SI-BH3 T-BH3 X-BG1 SI-BG2 X-BH3 SI-BH4 T-BG2 SI-BF1 X-BG2 SI-BG3 X-BF1 SI-BF2 X-BG3 SI-BG4 T-BF2 SI-BE1 X-BF2 SI-BF3 T-BF3 X-BE1 SI-BE2 X-BF3 SI-BF4 SI-BD1 X-BE2 SI-BE3 T-BE3 X-BD1 SI-BD2 X-BE3 SI-BE4 SI-BC1 X-BD2 SI-BD3 X-BC1 SI-BC2 X-BB3 SI-BD4 SI-BB1 X-BC2 SI-BC3 SI-BB2 X-BC3 SI-BC4 X-BB2 SI-BB3 SI-BA1 T-BB2 X-BB3 SI-BA2 SI-BB4 SI-BA3

0 40

SCALE FEET

N

PUBLIC WORKS YARD
STEAM ENHANCED EXTRACTION WORKPLAN
ROXANA, ILLINOIS

PROJECT NO. 60648474

AECOM

DRN. BY: bah Dec 2021
DSGN. BY: djd
CHKD. BY: wmp

Steam Enhanced Extraction System Layout

FIG. NO. 2

AREA A

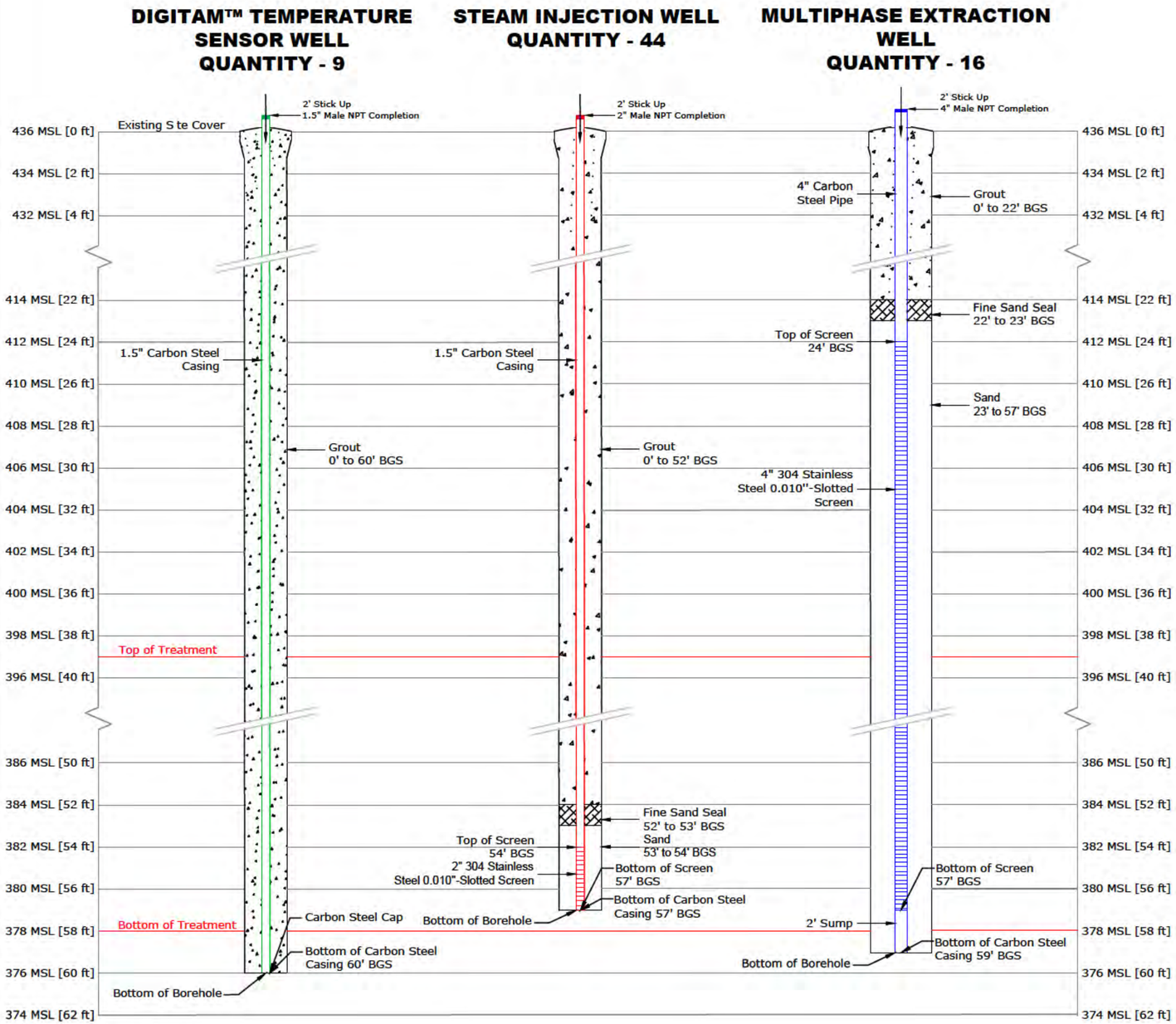

GENERAL NOTES:

1. MATERIAL TYPES
   - A. GROUT
     - HIGH TEMPERATURE PORTLAND TYPE 1 OR EQUIVALENT (NO BENTONITE)
   - B. SAND
     - FINE SAND SEAL: 40/60 SILICA SAND
     - STEAM INJECTION/EXTRACTION WELLS: 20/40 SILICA SAND
2. STEAM INJECTION WELLS
   - A. MINIMUM 4" DIAMETER BOREHOLE
   - B. 2" SCHEDULE 40 CARBON STEEL CASING
   - C. NOMINAL 2" DIAMETER WIRE-WRAPPED 304 STAINLESS STEEL 0.010"-SLOTTED SCREEN
3. TEMPERATURE WELLS
   - A. MINIMUM 4" DIAMETER BOREHOLE
   - B. 1.5" SCHEDULE 40 CARBON STEEL CASING
   - C. THREADS CAN BE NPT OR FLUSH JOINT
   - D. STICKUP MUST BE MALE NPT
   - E. ALL JOINTS TO BE TIGHTENED WITH PIPE WRENCH USING PIPE THREAD COMPOUND AND PTFE TAPE
4. MULTIPHASE EXTRACTION WELLS
   - A. MINIMUM 8" DIAMETER BOREHOLE
   - B. 4" SCHEDULE 40 CASING
   - C. NOMINAL 4" DIAMETER WIRE-WRAPPED 304 STAINLESS STEEL 0.010''-SLOTTED SCREEN
   - D. FITTINGS BETWEEN PIPE SECTIONS ARE 4 THREAD PER INCH (TPI) FLUSH THREADED UNLESS SPECIFIED OTHERWISE (IE M NPT OR PLUG)
   - E. 4" NPT FEMALE X WELD PLATE ENDS

McMillan-McGee Corp.
Electromagnetic Systems and Services
For the Energy and Environmental Industries
4895 - 35B Street SE
Calgary, AB T2B 3M9 Canada
www.mcmillan-mcgee.com
Ph: 403.569.5100, Fx: 403.272.7201

LPE

DATE

REV.	DATE (YR/MM/DD)	DESCRIPTION	DRAWN BY	ORG/ ENGR	Aprovac Dist
B2	2021/09/28	90% DESIGN	JS	CC	CC
B1	2021/08/27	60% DESIGN	JS	CC	CC
A1	2021/08/20	NOT FOR CONSTRUCTION	CC	CC	–

APEGA PERMIT NUMBER: P09178 SCALE: NOT TO SCALE

TITLE: **ET-DSP™ Well Completion Drawing**

CLIENT: **AECOM**

PROJECT: **Roxana Public Works Yard Roxana, Illinois**

SHEET: **WCD-01**

AREA B

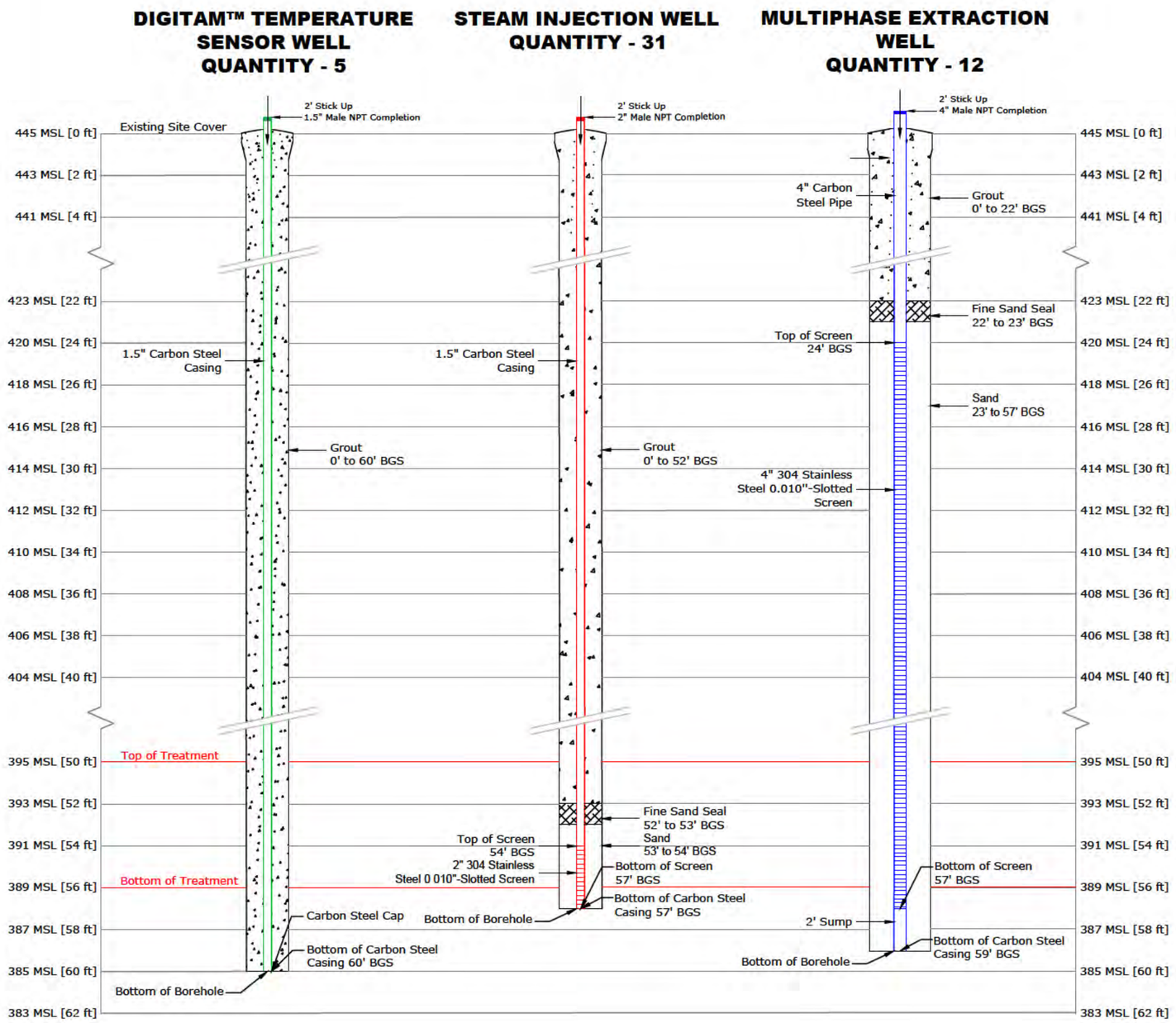

GENERAL NOTES:

1. MATERIAL TYPES
   - A. GROUT
     - HIGH TEMPERATURE PORTLAND TYPE 1 OR EQUIVALENT (NO BENTONITE)
   - B. SAND
     - FINE SAND SEAL: 40/60 SILICA SAND
     - STEAM INJECTION/EXTRACTION WELLS: 20/40 SILICA SAND
2. STEAM INJECTION WELLS
   - A. MINIMUM 4" DIAMETER BOREHOLE
   - B. 2" SCHEDULE 40 CARBON STEEL CASING
   - C. NOMINAL 2" DIAMETER WIRE-WRAPPED 304 STAINLESS STEEL 0.010"-SLOTTED SCREEN
3. TEMPERATURE WELLS
   - A. MINIMUM 4" DIAMETER BOREHOLE
   - B. 1.5" SCHEDULE 40 CARBON STEEL CASING
   - C. THREADS CAN BE NPT OR FLUSH JOINT
   - D. STICKUP MUST BE MALE NPT
   - E. ALL JOINTS TO BE TIGHTENED WITH PIPE WRENCH USING PIPE THREAD COMPOUND AND PTFE TAPE
4. MULTIPHASE EXTRACTION WELLS
   - A. MINIMUM 8" DIAMETER BOREHOLE
   - B. 4" SCHEDULE 40 CASING
   - C. NOMINAL 4" DIAMETER WIRE-WRAPPED 304 STAINLESS STEEL 0.010''-SLOTTED SCREEN
   - D. FITTINGS BETWEEN PIPE SECTIONS ARE 4 THREAD PER INCH (TPI) FLUSH THREADED UNLESS SPECIFIED OTHERWISE (IE M NPT OR PLUG)
   - E. 4" NPT FEMALE X WELD PLATE ENDS

McMillan-McGee Corp.
Electromagnetic Systems and Services For the Energy and Environmental Industries
4895 - 35B Street SE
Calgary, AB T2B 3M9 Canada
www.mcmillan-mcgee.com
Ph: 403.569.5100, Fx: 403.272.7201

LPE

DATE

REV.	DATE (YR/MM/DD)	DESCRIPTION	DRAWN BY	ORIG ENGR	Approved Dist
B2	2021/09/28	90% DESIGN	JS	CC	CC
B1	2021/08/27	60% DESIGN	JS	CC	CC
A1	2014/05/13	NOT FOR CONSTRUCTION	CC	CC	—

APEGA PERMIT NUMBER: P09178 — SCALE: NOT TO SCALE

TITLE: **ET-DSP™ Well Completion Drawing**

CLIENT: **AECOM**

PROJECT: **Roxana Public Works Yard, Roxana, Illinois**

SHEET: **WCD-02**

ANGLED
STEAM INJECTION WELL
QUANTITY - 4

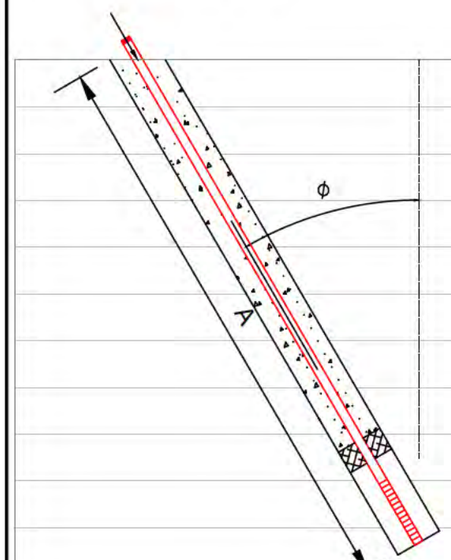

ANGLED DIGITAM™
TEMPERATURE SENSOR
WELL
QUANTITY - 2

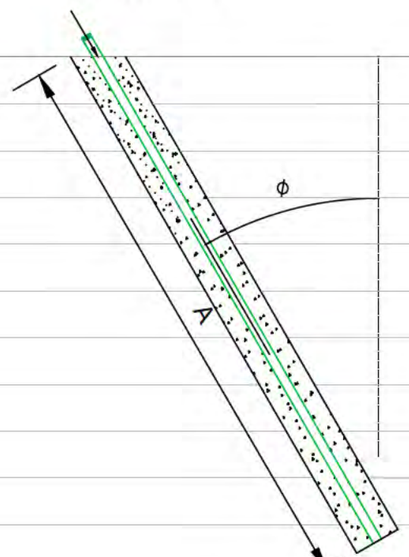

ANGLED MULTIPHASE
EXTRACTION WELL
QUANTITY - 6

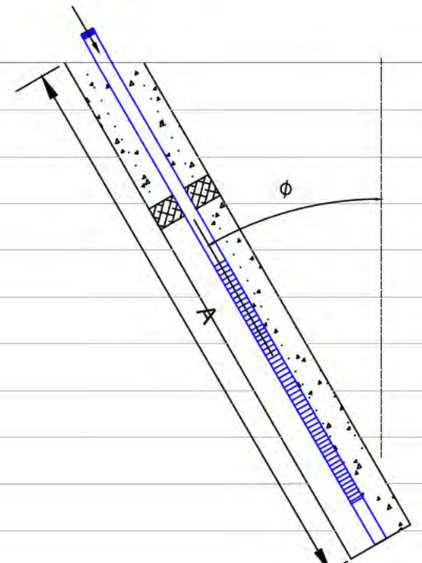

GENERAL NOTES:

1. MATERIAL TYPES
   - A. GROUT
     - HIGH TEMPERATURE PORTLAND TYPE 1 OR EQUIVALENT (NO BENTONITE)
   - B. SAND
     - FINE SAND SEAL: 40/60 SILICA SAND
     - STEAM INJECTION/EXTRACTION WELLS: 20/40 SILICA SAND
2. STEAM INJECTION WELLS
   - A. MINIMUM 4" DIAMETER BOREHOLE
   - B. 2" SCHEDULE 40 CARBON STEEL CASING
   - C. NOMINAL 2" DIAMETER WIRE-WRAPPED 304 STAINLESS STEEL 0.010"-SLOTTED SCREEN
3. TEMPERATURE WELLS
   - A. MINIMUM 4" DIAMETER BOREHOLE
   - B. 1.5" SCHEDULE 40 CARBON STEEL CASING
   - C. THREADS CAN BE NPT OR FLUSH JOINT
   - D. STICKUP MUST BE MALE NPT
   - E. ALL JOINTS TO BE TIGHTENED WITH PIPE WRENCH USING PIPE THREAD COMPOUND AND PTFE TAPE
4. MULTIPHASE EXTRACTION WELLS
   - A. MINIMUM 8" DIAMETER BOREHOLE
   - B. 4" SCHEDULE 40 CASING
   - C. NOMINAL 4" DIAMETER WIRE-WRAPPED 304 STAINLESS STEEL 0.010''-SLOTTED SCREEN
   - D. FITTINGS BETWEEN PIPE SECTIONS ARE 4 THREAD PER INCH (TPI) FLUSH THREADED UNLESS SPECIFIED OTHERWISE (IE M NPT OR PLUG)
   - E. 4" NPT FEMALE X WELD PLATE ENDS

ANGLED WELL DETAILS

Well	ø	A	Well	ø	A
SI-AH5	18.83	60.22	X-BD1	17.63	61.90
SI-AH7	15.73	59.21	X-BE1	17.63	61.90
SI-AG6	12.56	58.39	X-BF1	17.63	61.90
SI-AG5	13.30	58.57	X-BG1	17.63	61.90
X-AG7	12.15	60.35	T-AG6	15.34	62.21
X-BC1	17.63	61.90	T-BF2	20.24	63.00

McMillan-McGee Corp.
Electromagnetic Systems and Services
For the Energy and Environmental Industries
4895 - 35B Street SE
Calgary, AB T2B 3M9 Canada
www.mcmillan-mcgee.com
Ph: 403.569.5100, Fx: 403.272.7201

LPE

DATE

REV.	DATE (YR/MM/DD)	DESCRIPTION	DRAWN BY	ORG/ ENGR	Aprovad Dist
B2	2021/09/28	90% DESIGN	JS	CC	CC
B1	2021/08/20	60% DESIGN	JS	CC	CC

APEGA PERMIT NUMBER: P09178
SCALE: NOT TO SCALE

TITLE: **ET-DSP™ Well Completion Drawing**

CLIENT: **AECOM**

PROJECT: **Roxana Public Works Yard**
Roxana, Illinois

SHEET: **WCD-03**

MULTIPHASE EXTRACTION WELL WITH DOWNHOLE PUMP

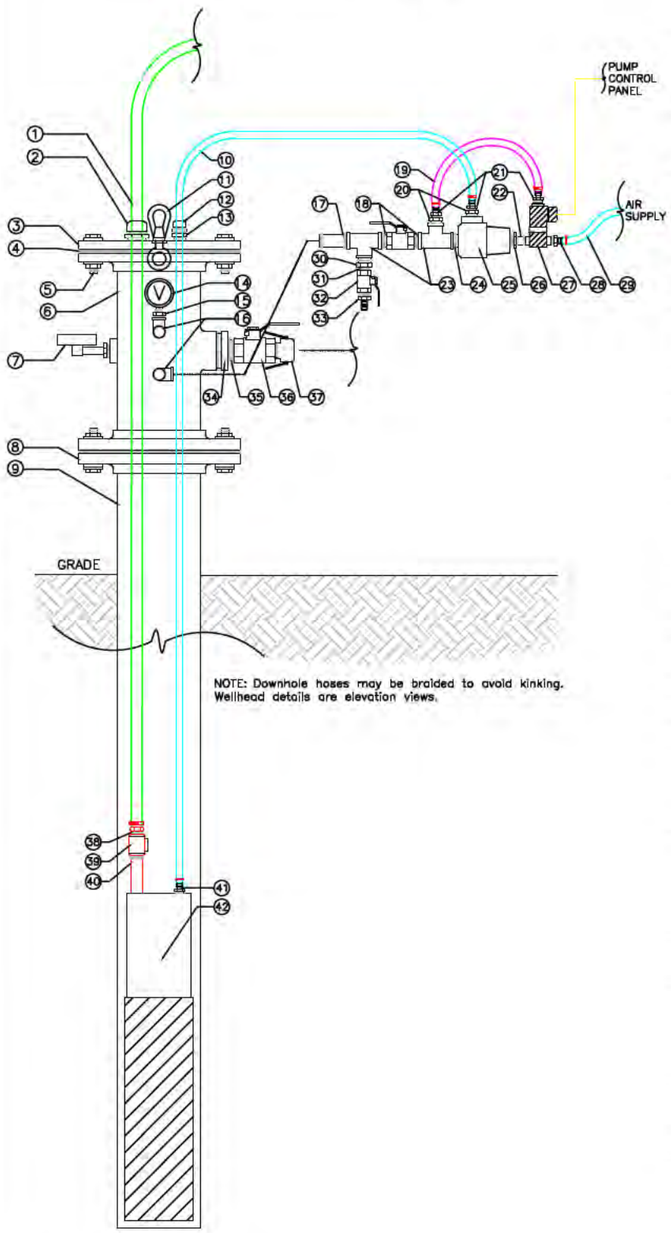

NOTE: Downhole hoses may be braided to avoid kinking. Wellhead details are elevation views.

WELLHEAD COMPONENTS

1. 1/2" ID PTFE GROUNDWATER EXTRACTION LINE
2. 1/2" X 3/4" M NPT CORD GRIP, PVDF
3. 4" ø 150# WELL COVER PLATE, STEEL
4. 4" ø 150# X 1/8" GASKET, VITON (TYP.)
5. 5/8" BOLT, LOCK WASHER & HEX NUT, ZINC (TYP.)
6. 4" ø Mc² WELLHEAD X 150# FLANGE ENDS, STEEL
7. TEMPERATURE GAUGE 0–250°F X 1/2" M NPT
8. 4" ø 150# FLANGE X 4" F NPT, STEEL
9. 4" ø M NPT RISER STICKUP, CARBON STEEL
10. 1/4" ID PTFE COMPRESSED AIR HOSE
11. 1/2" LIFTING EYE ASSEMBLY, WITH GASKET
12. 3/8" X 1/2" M NPT CORD GRIP, PVDF
13. 3/4" M NPT X 1/2" F NPT BUSHING, GALV.
14. VACUUM GAUGE, 0–30" HG X 1/4" M NPT
15. 1/2" M NPT X 1/4" F NPT BUSHING, BRASS
16. 1/2" NPT STREET ELBOW, BRASS
17. 1/2" X 3" NIPPLE, GALV.
18. 1/2" NPT CLOSE NIPPLE, GALV.
19. 1/4" ID ORTAC VENT HOSE
20. 1/2" M NPT X 1/4" F NPT BUSHING, BRASS
21. 1/4" M NPT X 1/4" HOSE BARB, BRASS
22. 1/4" X 3" NIPPLE, GALV.
23. 1/2" NPT PIPE TEE, GALV.
24. 1/2" NPT CLOSE NIPPLE, GALV.
25. 1/2" SUPER QUICK EXHAUST VALVE
26. 1/2" M NPT X 1/4" F NPT BUSHING, BRASS
27. 1/4" 3-WAY SOLENOID VALVE
28. 1/4" M NPT X 1/4" HOSE BARB, BRASS
29. 1/4" ID ORTAC COMPRESSED AIR HOSE
30. 1/2" M NPT X 3/8" F NPT BUSHING, GALV.
31. 3/8" NPT CLOSE NIPPLE, BRASS
32. 3/8" NPT BALL VALVE, BRASS
33. 3/8" M NPT X 1/4" HOSE BARB, BRASS
34. 2" M NPT X 1–1/2" F NPT REDUCER BUSHING, GALV.
35. 1–1/2" NPT CLOSE NIPPLE, GALV.
36. 1–1/2" NPT BALL VALVE, BRASS
37. 1–1/2" M NPT X 1–1/2" FEMALE CAMLOCK (PART B), ALUM. ALLOY
38. 1/2" M NPT X 3/4" HOSE BARB, BRASS
39. 3/4" SWING CHECK VALVE, BRASS
40. 3/4" X 6" NIPPLE, GALV.
41. 1/4" M NPT X 1/4" HOSE BARB, BRASS
42. PNEUMATIC PUMP WITH TOP–LOADING CUP ADAPTER

MULTIPHASE EXTRACTION WELL CONNECTION TO CONVEYANCE PIPING NETWORK

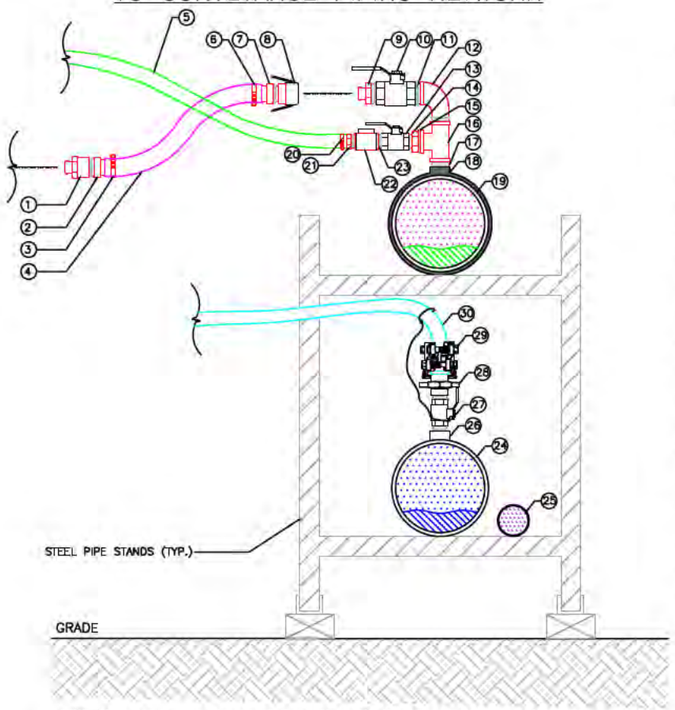

NOTE: Main conveyance pipe is interconnected with dresser couplings and sloped at approximately 1 degree from horizontal towards the inlet of the treatment system. Multiphase flow regime may not be as illustrated. Details are elevation views.

PIPING CONNECTION COMPONENTS

1. 1–1/2" M CAMLOCK TO 1–1/2" F NPT (PART A), ALUM. ALLOY
2. 1–1/2" M NPT TO X 1–1/2" PEX BARB
3. 1–1/2" HOSE CLAMP
4. 1–1/2" ID PEX VAPOR EXTRACTION HOSE
5. 1/2 " ID PTFE GROUNDWATER EXTRACTION HOSE
6. 1–1/2" HOSE CLAMP
7. 1–1/2" PEX BARB X 1–1/2" M NPT
8. 1–1/2" F NPT X 1–1/2" F CAMLOCK (PART D), ALUM. ALLOY
9. 1–1/2" M CAMLOCK X 1–1/2" M NPT (PART F), ALUM. ALLOY
10. 1–1/2" NPT BALL VALVE, BRASS
11. 1–1/2" NPT CLOSE NIPPLE, GALV.
12. 1–1/2" NPT STREET ELBOW, GALV.
13. 1/2" NPT BALL VALVE, BRASS
14. 1/2" NPT CLOSE NIPPLE, GALV.
15. 1–1/2" M NPT X 1/2" F NPT REDUCER BUSHING, GALV.
16. 1–1/2" F NPT X 1–1/2" F NPT X 1–1/2" F NPT TEE, GALV.
17. 1–1/2" NPT CLOSE NIPPLE, GALV.
18. 1–1/2" F NPT PIPE SADDLE, CARBON STEEL
19. 2" TO 12" ø PIPE HEADER, CARBON STEEL
20. 1/2" HOSE CLAMP
21. 1/2" M NPT TO X 1/2" HOSE BARB
22. 1/2" SWING CHECK VALVE, BRASS
23. 1/2" NPT CLOSE NIPPLE, GALV.
24. 2" to 6" ø STEAM HEADER, CARBON STEEL
25. 1" ø AIR SUPPLY LINE, CARBON STEEL
26. 1" F NPT WELDOLET, CARBON STEEL
27. 1" NPT BALL VALVE, SS
28. 1" HAMMER LOCK ASSEMBLY, ZINC PLATED DUCTILE IRON
29. 1" COLLAR LOCK BOLT CLAMP, PLATED DUCTILE IRON
30. 1" STEAM HOSE

TEMPERATURE MONITORING POINT

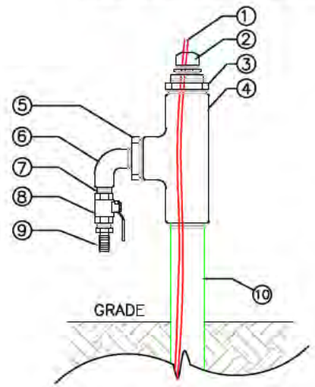

TEMPERATURE COMPONENTS

1. TEMPERATURE SENSOR STRING, 3/8" STRING DIA.
2. 3/8" X 3/4" M NPT CORD GRIP, NYLON
3. 1–1/2" M NPT X 3/4" F NPT BUSHING, GALV.
4. 1–1/2" NPT PIPE TEE, GALV.
5. 1–1/2" M NPT X 3/8" F NPT BUSHING, GALV.
6. 3/8" NPT STREET ELBOW, GALV.
7. 3/8" NPT CLOSE NIPPLE, GALV.
8. 3/8" NPT BALL VALVE, BRASS
9. 3/8" M NPT X 1/4" HOSE BARB, BRASS
10. 1–1/2" M NPT CARBON STEEL RISER STICKUP

NOTE: Wellhead details are elevation views.

McMILLAN-McGEE CORP.

ELECTROMAGNETIC SYSTEMS AND SERVICES FOR THE ENERGY AND ENVIRONMENTAL INDUSTRIES

4895 - 35B STREET SE
CALGARY, AB T2E 3M9 CANADA

WWW.MCMILLAN-MCGEE.COM
PH: 403.569.5100, FX: 403.272.7201

REV.	DATE (D/M/Y)	DESCRIPTION	DRAWN BY	ORD/ ENGR	Approved Dist.
B2	2021/09/28	99% DESIGN	JS	CC	CC
B1	2021/08/27	60% DESIGN	JS	CC	CC
A3	2021/08/27	UPDATE PEX LINE	JS	CC	CC
A2	2021/08/24	UPDATE NUMBERING	JS	CC	CC
A1	2021/08/18	NOT FOR CONSTRUCTION	JS	CC	CC

LPE

DATE

APEGA PERMIT NUMBER: P09178

SCALE: NOT TO SCALE

TITLE: **ET-DSP™ Well Head Details**

CLIENT: **AECOM**

PROJECT: **Roxana Public Works Yard**
Roxana, Illinois

SHEET: **WHD-01**

LEGEND:

- WASTE WATER AND GROUND WATER
- TREATED WATER
- CHILLER LIQUID
- COOLING TOWER WATER
- AIR
- VAPOURS
- NAPL
- SLUDGE

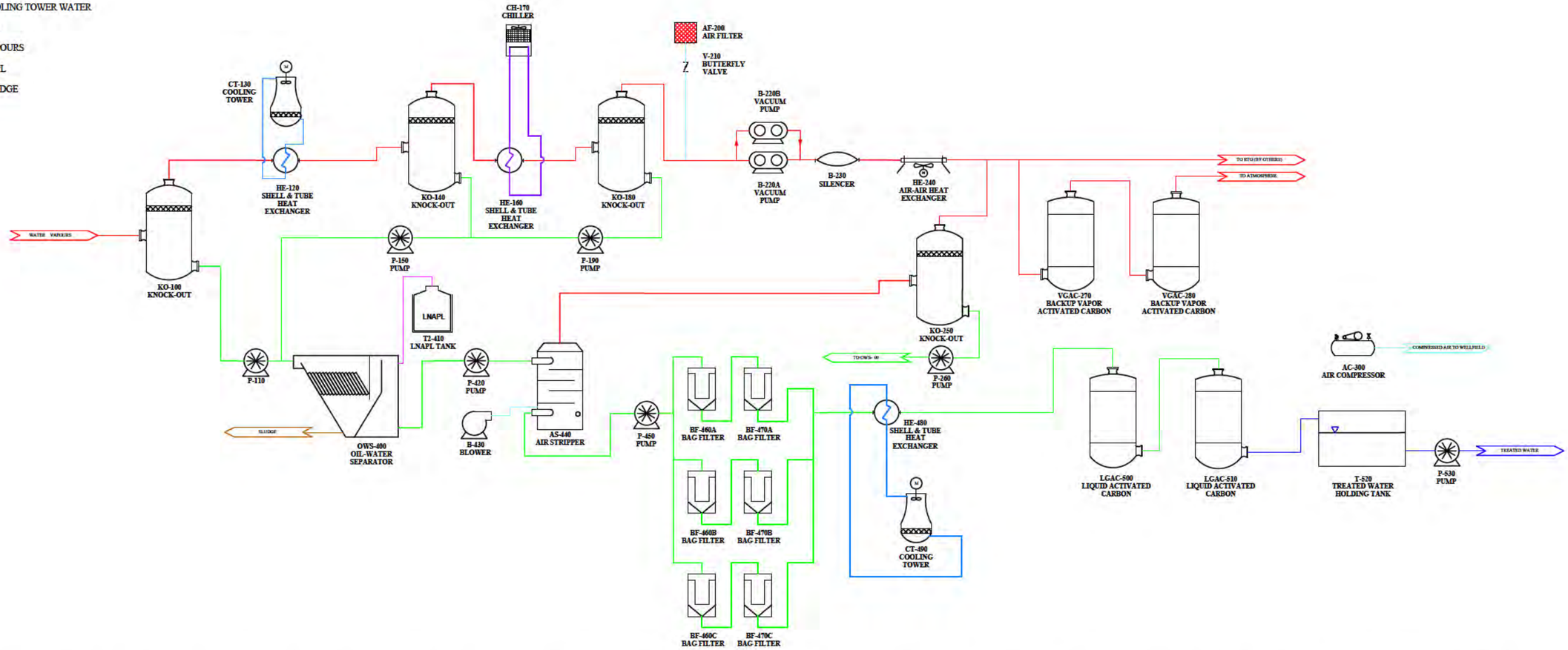

KO-100 KNOCK-OUT
3 5 FT DIA
200 gal BTWN HIGH AND LOW LEVEL

P-110
50 gpm AT 50 FT HEAD

HE-120 SHELL & TUBE HEAT EXCHANGER
2E6 BTU/HR
~975 FT^2 SA
111 gpm CW

CT-130 COOLING TOWER
111 gpm CW
INLET: 113°F
OUTLET: 77°F

KO-140 KNOCK-OUT
2 5 FT DIA
100 gal BTWN HIGH AND LOW LEVEL

P-150 PUMP
10 gpm AT 50 FT HEAD

HE-160 SHELL & TUBE HEAT EXCHANGER
1 8E5 BTU/HR
~822 FT^2 SA
19 7 gpm COOLANT

CH-170 CHILLER
1 8E6 BTU/HR
COOLANT IS 50% PROPYLENE GLYCOL/50% WATER

KO-180 KNOCK-OUT
2 5 FT DIA
100 gal BTWN HIGH AND LOW LEVEL

P-190 PUMP
5 gpm AT 50 FT HEAD

AF-200 AIR FILTER
FOR 4 IN VAPOUR LINE
500 SCFM

V-210 BUTTERFLY VALVE
4 IN

B-220A/B VACUUM PUMP
Sutorbilt Legend DSL 6LV
891 SCFM
21 5 LB/H WATER VAPOUR

B-230 SILENCER
891 SCFM
80 dB AT 5 FT HEAD

HE-240 FIN-FAN HEAT EXCHANGER
7 2E5 BTU/HR
~1250 FT^2 SA

KO-250 KNOCK-OUT
2 5 FT DIA
100 gal BTWN HIGH AND LOW LEVEL

P-260 PUMP
5 gpm AT 50 FT HEAD

VGAC-270 BACKUP VAPOR ACTIVATED CARBON
5 0 FT DIA
2500 LB

VGAC-280 BACKUP VAPOR ACTIVATED CARBON
5 0 FT DIA
2500 LB

AC-300 AIR COMPRESSOR
32 SCFM AT 150 psig

OWS-400 OIL-WATER SEPARATOR
20 µm OIL DROPLET SEPARATION AT 50 gpm

T2-410 LNAPL TANK
250 gal

P-420 PUMP
50 gpm AT 100 FT HEAD

B-430 BLOWER
600 SCFM

AS-440 AIR STRIPPER
A:W RATIO OF 74 8

P-450 PUMP
50 gpm AT 50 FT HEAD

BF-460A/B BAG FILTER
TRADE SIZE 2

BF-470A/B BAG FILTER
TRADE SIZE 2

HE-480 SHELL & TUBE HEAT EXCHANGER
2 02E6 BTU/HR
~1000 FT^2 SA

CT-490 COOLING TOWER
113 gpm CW
INLET: 113°F
OUTLET: 77°F

LGAC-500 LIQUID ACTIVATED CARBON
3 6 FT DIA
2000 LB

LGAC-510 LIQUID ACTIVATED CARBON
3 6 FT DIA
2000 LB

T-520 TREATED WATER HOLDING TANK
5000 gal

P-530 PUMP
50 gpm AT 50 FT HEAD

FOR REVIEW AND COMMENT

McMILLAN-McGEE CORP.
ELECTROMAGNETIC SYSTEMS AND SERVICES FOR THE ENERGY AND ENVIRONMENTAL INDUSTRIES
4895 - 35B STREET SE
CALGARY, AB T2B 3N9 CANADA
WWW.MCMILLAN-MCGEE.COM
PH: 403.569.5100, FX: 403.272.7201

LPE:

DATE:

REV.	DATE (D/M/YY)	DESCRIPTION	DRAWN BY	ORG'r ENGR	Aproved Dist
B3	2021/09/30	90% DESIGN	JS	JS	DAR
B2	2021/09/27	REVISE EQUIPMENT AND ADD SPECS	JS	JS	DAR
B1	2021/08/27	90% DESIGN	JS	JS	CC
A1	2020/05/06	FOR REVIEW AND COMMENT	TL	TL	DAR

APEGA PERMIT NUMBER: P00178
SCALE: NOT TO SCALE

TITLE: **Process Flow Diagram**

CLIENT: **AECOM**

PROJECT: **Roxana Public Works Yard**
Roxana, Illinois

SHEET: **PFD-01**

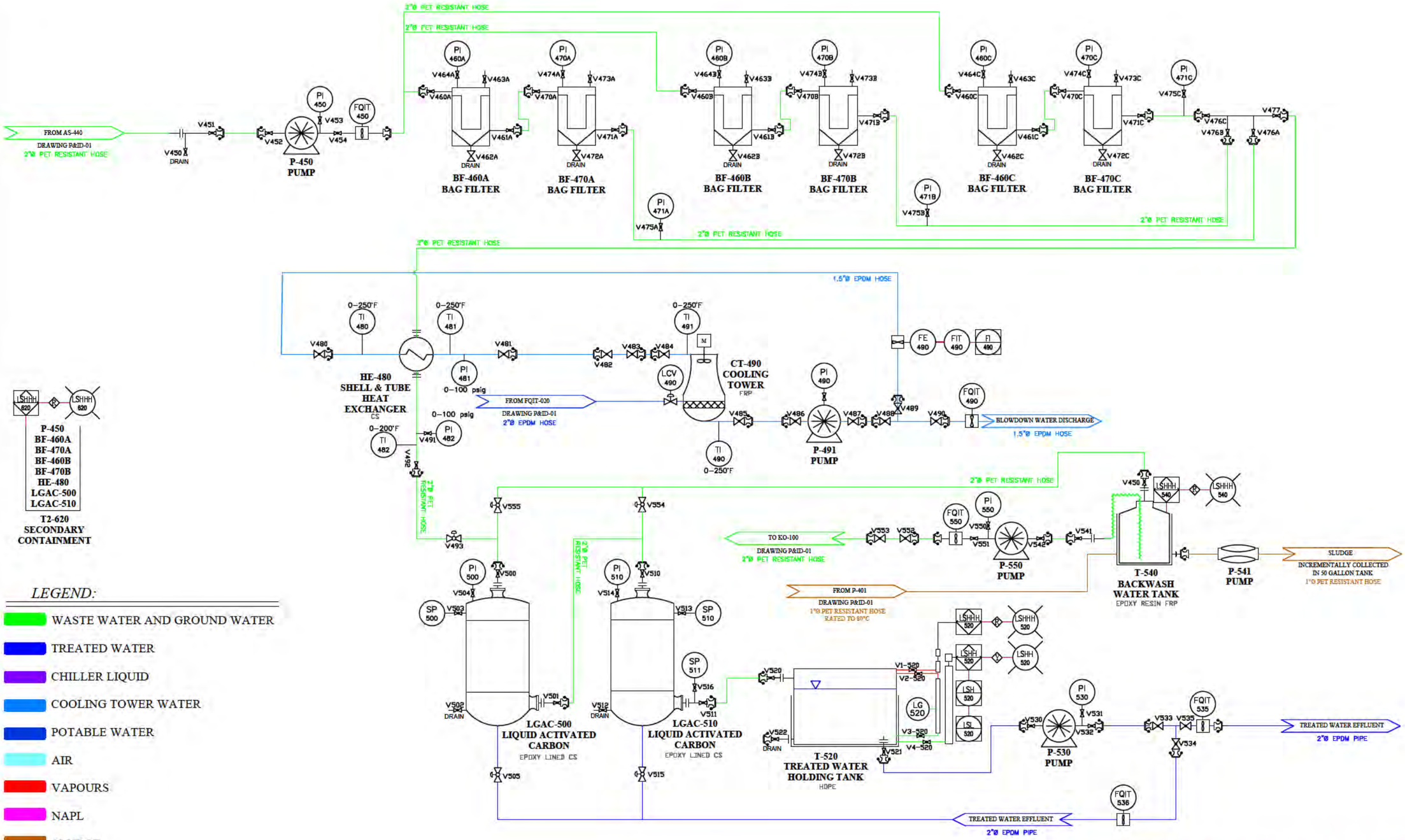

LEGEND:

- WASTE WATER AND GROUND WATER
- TREATED WATER
- CHILLER LIQUID
- COOLING TOWER WATER
- POTABLE WATER
- AIR
- VAPOURS
- NAPL
- SLUDGE

FOR REVIEW AND COMMENT

McMILLAN-McGEE CORP.
ELECTROMAGNETIC SYSTEMS AND SERVICES FOR THE ENERGY AND ENVIRONMENTAL INDUSTRIES
4895 - 35B STREET SE
CALGARY, AB T2B 3M9 CANADA
WWW.MCMILLAN-MCGEE.COM
PH: 403.569.5100, FX: 403.272.7201

LPE

DATE

REV.	DATE DD/MM/YY	DESCRIPTION	DRAWN BY	ORGI ENGR	Aproved Dist
B1	2021/09/30	90% DESIGN	JS	JS	DAR
A1	2021/09/22	FOR REVIEW AND COMMENT	JS	JS	DAR

APEGA PERMIT NUMBER: P09178

SCALE: NOT TO SCALE

TITLE: **Process and Instrumentation Diagram**

CLIENT: **AECOM**

PROJECT: **Roxana Public Works Yard**
Roxana, Illinois

SHEET: **P&ID-04**

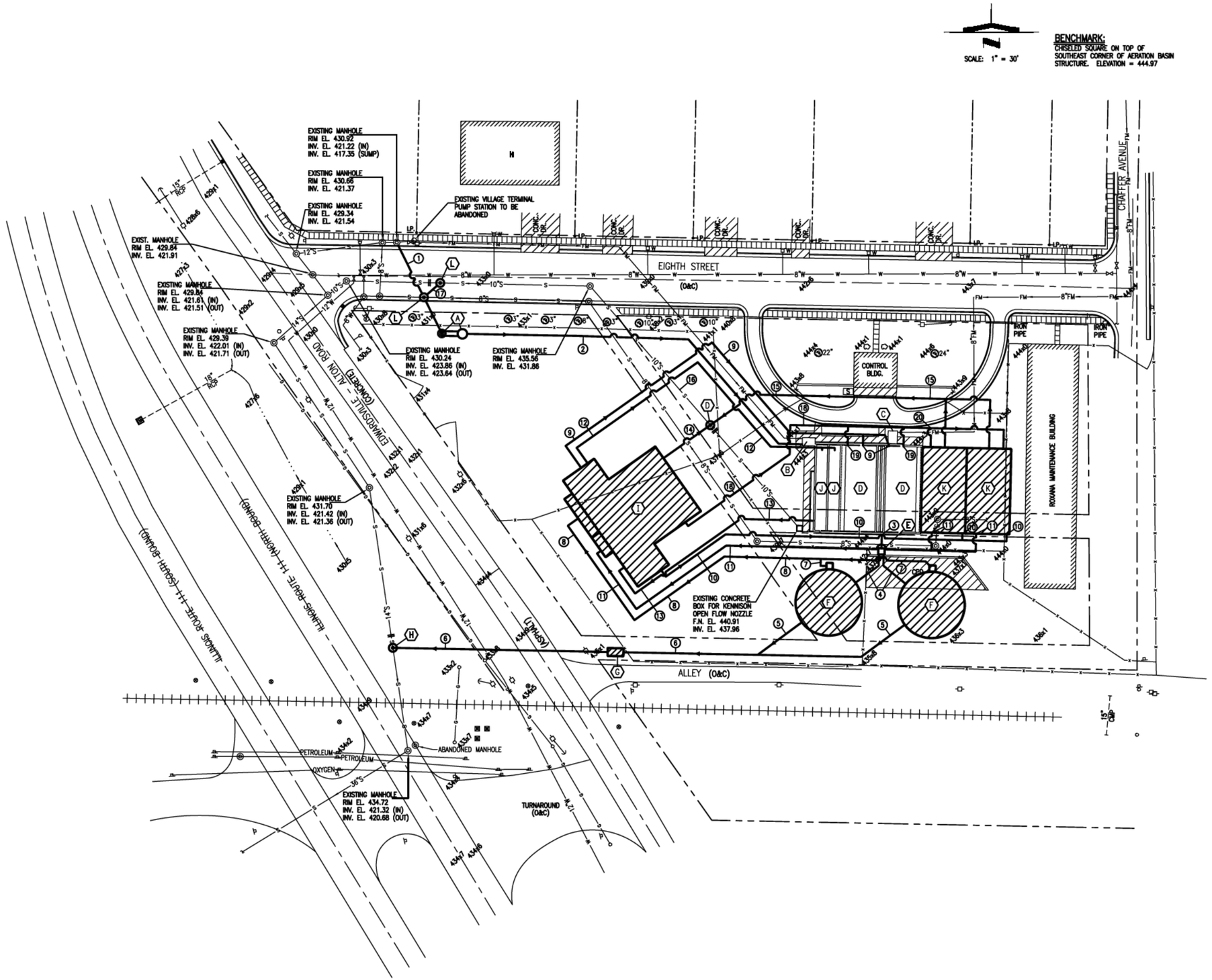

EXISTING TOPOGRAPHIC LEGEND

- HOUSE
- UTILITY POLE
- UTILITY POLE GUY WIRE
- BURIED TELEPHONE CABLE
- TELEPHONE PEDESTAL (SPLICE BOX)
- I.P. IRON PIN (PROPERTY CORNER)
- RIGHT OF WAY MARKER
- RIGHT OF WAY LINE
- PROPERTY LINE
- CENTER LINE OF ROADWAY/SURVEY
- FENCE LINE
- FENCE GATE
- FENCE POST
- CONCRETE SIDEWALK
- OPEN DRAINAGE DITCH
- DRAINAGE CULVERT
- STORM SEWER
- STORM SEWER INLETS
- BUSH/SHRUB
- TREE (SIZE INDICATED)
- ROAD/STREET SIGN
- SANITARY SEWER MANHOLE
- SANITARY SEWER (GRAVITY)
- SANITARY SEWER FORCE MAIN, 6"
- WATER MAIN
- WATER MAIN GATE VALVE & BOX
- FLUSHING HYDRANT
- TWO WAY FIRE HYDRANT
- THREE WAY FIRE HYDRANT
- WATER METER
- GAS MAIN
- GAS MAIN VENT PIPES
- GAS METER
- RAILROAD
- RAILROAD CROSSING SIGN
- RAILROAD ELECTRICAL CONTROL BOX
- CULTIVATION LINE
- UNPAVED ROADWAY
- PAVED ROADWAY
- CONCRETE DRIVE/PAD
- SPOT ELEVATION

KEY TO UNITS

MARK	DESCRIPTION
Ⓐ	PROPOSED TERMINAL PUMP STATION WITH VALVE VAULT
Ⓑ	REMOVE AND REPLACE INFLUENT COMMINUTOR
Ⓒ	EXISTING COMMINUTOR (INFLUENT FROM RAIFORT INDUSTRIAL PARK)
Ⓓ	EXISTING AERATION TANKS, PROVIDE PROPOSED DIFFUSED AERATION EQUIPMENT
Ⓔ	PROVIDE PROPOSED FLOW SPLITTER
Ⓕ	PROVIDE PROPOSED CLARIFIER
Ⓖ	PROVIDE PROPOSED EFFLUENT PARSHALL FLUME WITH AUTOMATIC COMPOSITE SAMPLER
Ⓗ	PROVIDE PROPOSED OUTFALL MANHOLE
Ⓘ	PROVIDE PROPOSED CONTROL BUILDING (SLUDGE PUMPS, BLOWERS, SLUDGE DEWATERING)
Ⓙ	CONVERT EXISTING SETTLING BASINS TO SLUDGE STORAGE/THICKENING
Ⓚ	PROVIDE PROPOSED AEROBIC DIGESTERS
Ⓛ	PROVIDE 5' DIA. PRECAST CONCRETE MANHOLE

PIPING SCHEDULE

MARK	DESCRIPTION
①	PROPOSED 12" VILLAGE INFLUENT GRAVITY SEWER
②	PROPOSED 8" VILLAGE INFLUENT FORCE MAIN
③	PROPOSED 18" AERATION TANK EFFLUENT TO CLARIFIERS
④	PROPOSED 16" CLARIFIER INFLUENT
⑤	PROPOSED 16" CLARIFIER EFFLUENT
⑥	PROPOSED 18" PLANT EFFLUENT
⑦	PROPOSED 8" CLARIFIER WASTE SLUDGE/SCUM/DRAIN TO SLUDGE PUMPS
⑧	PROPOSED 10" CLARIFIER WASTE SLUDGE/SCUM/DRAIN TO SLUDGE PUMPS
⑨	PROPOSED 8" RAS TO AERATION TANKS
⑩	PROPOSED 6" WAS TO AEROBIC DIGESTERS
⑪	PROPOSED 8" DIA. DIGESTED SLUDGE TO SLUDGE PUMPS
⑫	PROPOSED 4" DIA. SLUDGE TO THICKENERS
⑬	PROPOSED 6" THICKENED SLUDGE TO BELT FILTER PRESS FEED PUMP
⑭	PROPOSED 6" SLUDGE DEWATERING FILTRATE RETURN TO VILLAGE INFLUENT PUMP STATION
⑮	PROPOSED 8" DIGESTER SUPERNATANT RETURN TO VILLAGE INFLUENT PUMP STATION
⑯	EXISTING 10" EFFLUENT SEWER, CONVERT FOR USE TO RETURN FILTRATE AND SUPERNATANT TO VILLAGE INFLUENT PUMP STATION
⑰	PROPOSED 10" FILTRATE AND SUPERNATANT RETURN
⑱	PROPOSED 12" AIR LINE
⑲	PROPOSED 8" AIR LINE TO AERATION TANKS
⑳	PROPOSED 8" AIR LINE TO AEROBIC DIGESTERS

EXIST. IEPA OPERATING PERMIT 1999-AO-2879

WASTEWATER TREATMENT PLANT CAPACITY INCREASE VILLAGE OF ROXANA, ILLINOIS

SCHEMATIC SITE PLAN

CURRY ENGINEERS, INC. & ASSOCIATES
NASHVILLE, ILLINOIS

Revisions		Survey REJ, RAW	SHEET
		Design MDC	1
		Drawn AJH, REJ	OF
Plot Date		Checked	
Dwg File 9909TOPO		Date MAY 1999	JOB NO. 99.09

EXISTING SITE PIPING SCHEDULE

MARK	SIZE/MATERIAL	DESCRIPTION	FLOW
1	12" SDR 26 PVC WITH #12 TRACER WIRE	INFLUENT FORCE MAIN	FORCE MAIN
2	12" CL 53 D.I.	METERED INFLUENT FLOW	FORCE MAIN
3	16" CL 53 D.I.	FINE SCREEN EFFLUENT	GRAVITY
4	16" SDR 26 PVC	RAW MIXED LIQUOR	GRAVITY
5	16" SDR 26 PVC	TEE WITH CAP FOR FUTURE	GRAVITY
6	16" SDR 26 PVC	BIOLAC BASIN INFLUENT	GRAVITY
7	8" SDR 26 PVC	BIOLAC BASIN DRAIN	GRAVITY
8	16" SDR 26 PVC	BIOLAC BASIN EFFLUENT	GRAVITY
9	16" SDR 26 PVC	BIOLAC BASIN COMBINED EFFLUENT	GRAVITY
10	16" SDR 26 PVC	CLARIFIER INFLUENT	GRAVITY
11	16" SDR 26 PVC	CLARIFIER EFFLUENT	GRAVITY
12	16" SDR 26 PVC	CLARIFIER EFFLUENT	GRAVITY
13	16" SDR 26 PVC	U.V. INFLUENT	GRAVITY
14	16" SDR 26 PVC	U.V. EFFLUENT	GRAVITY
15	8" CL. 53 D.I.P.	TREATED EFFLUENT FORCE MAIN	FORCE MAIN
16	12" SDR 21 PVC WITH #12 TRACER WIRE	TREATED EFFLUENT FORCE MAIN	FORCE MAIN
17	8" SDR 26 PVC WITH #12 TRACER WIRE	RAS/WAS FORCE MAIN	FORCE MAIN
18	8" SDR 26 PVC WITH #12 TRACER WIRE	RAS FORCE MAIN	FORCE MAIN
19	8" CL. 53 D.I.P.	WAS FORCE MAIN	FORCE MAIN
20	8" CL. 53 D.I.P.	WAS FORCE MAIN	FORCE MAIN
21	8" CL. 53 D.I.P.	THICKENED EFFLUENT SLUDGE	GRAVITY
22	8" CL. 53 D.I.P.	THICKENED EFFLUENT SLUDGE	GRAVITY
23	6" CL. 53 D.I.P.	THICKENED EFFLUENT SLUDGE	FORCE MAIN
24	6" SDR 26 PVC WITH #12 TRACER WIRE	THICKENED EFFLUENT SLUDGE	FORCE MAIN
25	6" SDR 26 PVC	THICKENED EFFLUENT SLUDGE – POLYMER FEED INFLUENT	FORCE MAIN
26	6" SDR 26 PVC	POLYMER TREATED SLUDGE	FORCE MAIN
27	6" CL. 53 D.I.P.	DRYING BED INFLUENT	FORCE MAIN
28	6" PERFORATED HDPE PIPE	FILTERED DRYING BED EFFLUENT	GRAVITY
29	6" CL. 53 D.I.P.	FILTERED DRYING BED EFFLUENT	GRAVITY
30	6" SDR 26 PVC	FILTERED DRYING BED EFFLUENT	GRAVITY
31	4" SDR 26 PVC	SLUDGE STORAGE FLOOR DRAINS	GRAVITY
32	8" SDR 26 PVC	SLUDGE STORAGE LOT DRAINS	GRAVITY
33	4" SDR 26 PVC	GARAGE/LAB SEWER	GRAVITY
34	12" SDR 26 PVC	PUMP STATION NO. 4 INFLUENT	GRAVITY
35	4" SDR 26 PVC	BLOWER BUILDING FLOOR DRAINS	GRAVITY
36	16" SDR 26 PVC	TEE WITH CAP FOR FUTURE	GRAVITY
37	6" CL. 53 D.I.P.	CLARIFIER SLUDGE EFFLUENT	GRAVITY
38	8" SDR 26 PVC	BIOLAC BASIN DRAINS	GRAVITY
39	6" CL. 53 D.I.P.	DIGESTER DECANT	GRAVITY
40	6" CL. 53 D.I.P.	DIGESTER DECANT	GRAVITY
41	6" SDR 26 PVC	DIGESTER DECANT	GRAVITY
42	6" CL. 53 D.I.P.	PROCESS WASTE	FORCE MAIN
43	6" SDR 26 PVC WITH #12 TRACER WIRE	PROCESS WASTE	FORCE MAIN
44	4" SDR 26 PVC WITH #12 TRACER WIRE	DRYING BED SATURATION LINE	FORCE MAIN
45	12" SDR 21 PVC WITH #12 TRACER WIRE	POTABLE WATER LINE	PRESSURE
46	6" SDR 21 PVC WITH #12 TRACER WIRE	POTABLE WATER LINE	PRESSURE
47	3" SDR 21 PVC WITH #12 TRACER WIRE	SERVICE CONNECTION – POTABLE WATER WITH CORP. STOP	PRESSURE
48	2" SCH. 40 PVC WITH #12 TRACER WIRE	WATER SERVICE/INFLUENT PROCESS SPRAY WATER PUMP STATION	PRESSURE
49	3" SDR 21 PVC WITH #12 TRACER WIRE	PROCESS SPRAY WATER	PRESSURE
50	(OPEN)		
51	6" CL. 53 D.I.P.	SCUM DRAIN LINE	GRAVITY
52	2" SCH. 40 PVC	SCUM LINE	FORCE MAIN
53	12" SCH. 40 STEEL (WELDED)	PROCESS AIR FROM BLOWERS	LOW PRESSURE AIR
54	10" SCH. 40 STEEL (WELDED)	PROCESS AIR FROM BLOWERS	LOW PRESSURE AIR
55	8" SCH. 40 STEEL (WELDED)	PROCESS AIR FROM BLOWERS	LOW PRESSURE AIR
56	6" SCH. 40 STEEL (WELDED)	PROCESS AIR FROM BLOWERS	LOW PRESSURE AIR
57	4" SCH. 40 STEEL (WELDED)	PROCESS AIR FROM BLOWERS	LOW PRESSURE AIR
58	6" CL. 53 D.I.P.	DRYING BED FILL LINE DRAIN (FREEZE PREVENTION)	GRAVITY
59	4" SDR 26 PVC	WATER PLANT PROCESS WASTE	FORCE MAIN

NOTE: ALL DUCTILE IRON PIPING AND FITTINGS SHALL HAVE PROTECTO 401 CERAMIC EPOXY LINING.

PROPOSED SITE PIPING SCHEDULE

(SEE SHEET 10A & 10B FOR ADDITIONAL PIPING)
(SEE SHEET 10A & 10B FOR BASE BID VS ALT. BID #1)

MARK	SIZE/MATERIAL	DESCRIPTION	FLOW
60	16" SDR 26 PVC	CONTACT BASIN INFLUENT/EFFLUENT	GRAVITY
61	4" CASING, 2 – 3/4" PVC TUBE	PROPOSED LIQUID LIME FEED	
62	3" SDR 21 PVC	PROPOSED PROCESS WATER	
63	6" CASING, 2 – 3/4" PVC TUBE	PROPOSED FERRIC SULFATE FEED	
64	6" CASING, 2–1/2" TUBE	PROPOSED BLEACH FEED	
65	4" CASING, 2–1/2" TUBE	PROPOSED SODIUM BISULFITE FEED	
66	4" CONDUIT	NEW ELECTRIC SERVICE	
67	2" SDR 21 PVC	POTABLE WATER SERVICE	
68	6" CASING, 2–1/2" TUBE	PROPOSED POLYMER	

SCALE: 1" = 30'

LEGEND

- FLOW ARROWS
- GATE VALVE
- P.V. PLUG VALVE
- INCREASER/REDUCER
- MANHOLE
- 412.00 INVERT ELEVATION
- TWO-WAY FLUSH HYDRANT WITH AUXILIARY GATE VALVE AND C.I. BOX
- THREE-WAY FIRE HYDRANT WITH AUXILIARY GATE VALVE AND C.I. BOX
- CATCH BASIN
- M METER
- CP CONTROL PANEL
- PW POTABLE WATER LINE
- J.B. ELECTRICAL JUNCTION BOX
- C.S. COMPOSITE SAMPLER
- B-1 EXISTING SOIL BORING, SEE SPECS.
- FENCE
- ELECTRICAL
- RESIDUE BASINS & PIPING
- NEW ELECTRICAL/COMMUNICATION LINES
- NEW CHEM. AND WATER LINE

EXISTING SLUDGE DRYING BEDS
EXISTING SLUDGE STORAGE PAD
EXISTING FLOOR DRAIN (FD-1) AS INDICATED ON FIXTURE SCHEDULE, SHEET P2
EXISTING CATCH BASIN – 1
RIM EL. = 420.90
LINE (32) INV. EL. = 418.00
EXISTING CONDENSING UNIT
EXISTING GENERATOR PAD (12'x18')
GARAGE/SHOP
MECH
WC
OFFICE
LAB
GENSET
EXISTING ACCESS DRIVE
SLUDGE STORAGE
F.F.E. = 431.00
FUTURE EXPANSION
T/C=426.84, TYP.
EXISTING PARKING LOT
EXISTING INFLUENT FLOW METER. SEE DETAIL ON SHEET SA4.
EXISTING FINE SCREEN
SEE SHEET 2
EXISTING PROCESS WASTE PUMP STATION & VALVE VAULT (P.S. NO. 4)
EXISTING MH-7
RIM EL. = 427.0
LINE (34) INV. EL. = 416.50
LINE (30) INV. EL. = 416.58
LINE (32) INV. EL. = 417.50
LINE (33) INV. EL. = 420.00
MH-1
MH-2
MH-3
PROVIDE EFFLUENT PARSHALL FLUME FLOW MEASUREMENT STRUCTURE. SEE DETAILS ON SH. RB4.
PROPOSED CHEMICAL FEED BUILDING
PROPOSED CHEMICAL FEED VAULT
PROVIDE 4' DIA. MANHOLE WITH FLAT SLAB TOP AND IDOT TYPE 1 FRAME AND CLOSED LID, TYPICAL
GROUT SOLID
LINE FEED MANHOLE. EXTEND CASING AND TUBING OVER FLOW. TOP RING PENETRATION, COORDINATE WITH OPERATORS, CAN STOP PLANT FLOW FOR ±30 MINUTES EVERY HOUR.
CHEMICAL FEED/BLOWER BUILDING
PROPOSED P-REMOVAL
PROPOSED DISINFECTION
PROPOSED DE-CHLOR
RELOCATED POLYMER
(2) SPARE IN
(2) 6"ø PIPES
EXISTING AEROBIC DIGESTER BASINS
EXISTING BIOLAC BASIN NO. 2
NORMAL POOL EL. 427.00
BOTTOM EL. 417.00
EXISTING BIOLAC BASIN NO. 1
NORMAL POOL EL. 427.00
BOTTOM EL. 417.00
3:1 TYP.
MUST DIRECTIONAL BORE WITH EQUIVALENT PIPE
EXISTING BASIN DRAIN STRUCTURE, TYPICAL
EXISTING MH-2
RIM EL. = 429.25
LINE (8) INV. EL. = 425.00
LINE (9) INV. EL. = 425.00
EXISTING BASIN EFFLUENT STRUCTURE, TYP.
Fe FEED POINT 1
Fe FEED POINT 2
Fe FEED POINT 3 FUTURE
EXISTING SLUDGE THICKENER BASINS
EXISTING SLUDGE PUMP STATION AND VALVE VAULT (P.S. NO. 3)
PROVIDE 4' DIA. MANHOLE WITH FLAT SLAB TOP AND IDOT TYPE 1 FRAME AND CLOSED LID, TYPICAL.
6" CASING FOR BLEACH AND DE-CHLOR LINE.
NEW ELECTRIC AND COMMUNICATION LINES.
Fe AND POLYMER BY OWNER
EXISTING BASIN DRAIN MH-3
RIM EL. = 428.0
LINE (38) INV. EL. = 415.21
EXISTING BASIN DRAIN MH-4
RIM EL. = 428.0
LINE (38) INV. EL. = 415.21
PROVIDE 4' DIA. MANHOLE
EXISTING RAS/WAS PUMP STATION AND VALVE VAULT (P.S. NO. 2)
FUTURE VALVES BY OWNER
PROVIDE 3" VALVE AND C.I. VALVE BOX
APPROX. EX. ELECTRIC, TYP.
PROPOSED MH-8
RIM EL. = 427.0
INV. EL. = 420.45
EXISTING CLARIFIER NO. 2
TOP WEIR = 424.99
EXISTING CLARIFIER NO. 1
TOP WEIR = 425.02
TOP STRUCTURE EL. 427.45
EXISTING SCUM PUMP STATION
EXISTING MH-6
RIM EL. = 427.24
LINE (12) INV. EL. = 420.65
LINE (13) INV. EL. = 420.75
EXISTING MH-5
RIM EL. = 427.10
LINE (11) INV. EL. = 420.94
LINE (12) INV. EL. = 420.94
BY CONTRACTOR 3 WAY FIRE HYDRANT WITH AUXILIARY GATE VALVE AND PLUG VALVE (BASIN FILL HYDRANT).
EXISTING 12" SDR 21 PVC FORCE MAIN WITH #12 TRACER WIRE (BY OTHERS)
EXISTING U.V. DISINFECTION BASIN
REMOVE UV REACTOR, INSERT FLUME
EXISTING EFFLUENT FLOW METER. SEE DETAIL ON SHEET SA25.
EXISTING EFFLUENT PUMP STATION AND VALVE VAULT (P.S. NO. 5)
REMOVE AND RE-ROUTE FENCE
PROPOSED CHLORINE CONTACT REACTOR ±32'x23'x5' WATER DEPTH
PROPOSED CHLORINE MONITORING BUILDING
PROPOSED MH-7
RIM EL. = 427.0
INV. EL. = 420.55
EXIST. CULTIVATED FIELD
BASIN NO. 1
CLARIFIER BLOWDOWN WASTE FORCE MAIN FROM CLARIFIER BLOWDOWN WASTE PUMP STATION AT WATER TREATMENT PLANT
EXISTING BORROW PIT (APPROXIMATE LIMITS)
CEMETERY ROAD (CRUSHED STONE)
FROM W.T.P. ±3/4 MILE TO WEST

WASTEWATER TREATMENT PLANT CHEMICAL FEED IMPROVEMENTS VILLAGE OF ROXANA, IL

SITE PIPING PLAN

CRRY & ASSOCIATES ENGINEERS INC

Revisions	Survey	SHEET
	PAC, RAW	
	Design	3
	PAC	
Layout	Drawn	OF
LAYOUT 2	ALH, REJ	
Plot Date	Checked	
6-20-19		
Dwg File	Date	Job No.
18112-1	AUG. 2018	2018.112

ILLINOIS ENVIRONMENTAL PROTECTION AGENCY

1021 NORTH GRAND AVENUE EAST, P.O. BOX 19276, SPRINGFIELD, ILLINOIS 62794-9276 · (217) 782-3397
JB PRITZKER, GOVERNOR JOHN J. KIM, DIRECTOR

217-524-3300

CERTIFIED MAIL
RETURN RECEIPT REQUESTED

7011 1150 0001 0857 5697

JUL 11 2022

Shell Oil Products US
Attn: Leroy Bealer
128 East Center Street
Nazareth, PA 18064

1191150002 – Madison County
Equilon d/b/a Shell Oil Products, US
ILD080012305
Log No. PS22-007
RCRA Permit

Mr. Leroy Bealer,

This is in response to a letter submitted by Wendy Pennington on behalf of Shell Oil Products US (SOPUS) dated February 21, 2022, and received by Illinois EPA on February 23, 2022, and additional information dated March 2, 2022, was received on March 4, 2022. The request was logged in as PS22-007. The letter is a request for a "Contained-In Determination" for contaminated groundwater that would be extracted by the steam enhanced extraction system (SEE) at the Village of Roxana Public Works Yard site located at 310 N Central Avenue in Roxana Illinois.

Soil and groundwater at the Village of Roxana Public Works Yard site is contaminated with multiple constituents of concern (COC). Benzene is the primary COC, which is considered a U-Listed hazardous waste (U019). SOPUS proposes to treat and dispose of approximately 6.8 million gallons of this contaminated groundwater as a nonhazardous waste to be discharged to a publicly owned treatment works (POTW).

PS22-007 seeks written concurrence from the Illinois EPA that the 6.8 million gallons of groundwater contaminated with Benzene can be determined to no longer contain a listed hazardous waste if the following conditions are met:

a. The contaminated groundwater does not exhibit a characteristic of a hazardous waste as set forth in 35 IAC 721, Subpart C, and
b. The contaminated groundwater meets the land disposal restrictions (LDRs) at 35 IAC 728, including the standards for all underlying hazardous constituents that may be present, and
c. The concentrations of COCs in groundwater meet the pre-treatment standards for the POTW.

PS22-007 indicates that the contaminated groundwater subject to the Contained-In Determination request will not exhibit a characteristic of a hazardous waste and will meet the LDRs, including those for any underlying hazardous constituents that may be present. The Illinois EPA concurs that the contaminated groundwater may be managed as a non-hazardous special waste if the conditions a. through c. above are met provided that:

1. The treated groundwater is discharged to the POTW sewer system as proposed by SOPUS, all other applicable rules and regulations, requirements, standards and conditions set forth for conducting such activities by the POTW and the Illinois EPA Bureau of Water (or any other authority(s)) are met.

2. SOPUS must meet the Universal Treatment Standards in 728 TABLE U for any underlying hazardous constituents present in the extracted groundwater from the subject site in addition to the treatment standards for benzene.

This letter does not approve any remediation or remedial objectives for the site. Management and/or disposal of the contaminated groundwater other than as described above would result in the need to evaluate the application of the Contained-In Policy on a case-by-case basis. Under these conditions, the company should contact the Bureau of Land Permit Section directly for assistance.

The opinions expressed in this letter are limited to the above referenced facility and the conditions described in your letter. If the conditions at the site or management of the material are modified, the statements made in this letter may no longer be valid.

If you have any questions regarding this letter, please feel free to contact Visal Poornaka at (217) 558-4717.

Sincerely,

W. Robert Watson, P.E.
Manager , RCRA Unit
Division of Land Pollution Control
Bureau of Land

WRW: VP: 1191150002-RCRA-PS22-007.docx

Cc: Wendy Pennington (electronic copy only)

VP

Appendix G – Construction and Operation Permit Forms

Illinois Environmental Protection Agency

1021 North Grand Avenue East • P.O. Box 19276 • Springfield • Illinois • 62794-9276 • (217) 782-3397

Instructions for Application for Construction/Operation Permit Approval
WPC-PS-1

This form must be submitted for all Authorizations to Construct or Permit Applications. Two sets of the applications must be submitted. Items which are self-explanatory are omitted in these instructions. Signatures on at least one (1) submittal must be original.

1. Name and Location of the Project. Include the nearest street and city address.

2. Provide a brief description of the scope of the project such as "A sanitary sewer extension serving Happy Hills Subdivision" or "A sanitary sewer system and activated sludge, sand filter, and disinfection waste treatment facilities serving Happy Hills Subdivision."

3. A detailed explanation of when each of the indicated schedules must be submitted is indicated on the instruction sheet for the appropriate schedule. Generally, if the project involves any of the items listed, submit the corresponding schedule and check the appropriate space(s).

   3.1 Submit a copy of the IHPA approval letter if available.

4. The Land Trust Disclosure Submittal should be made on Schedule T.

5. Indicate the type of application (construction, operating permit, supplemental permit, etc.) being filed with the Agency.

   5.B If there is an existing NPDES Permit, indicate the Permit Number and the date of issuance.

   5.E If there is an existing NPDES Permit, indicate the Permit Number and the date of issuance. Submit a completed WPC-PS-1 form and any appropriate schedule for a Supplemental Permit request. The Supplemental Permit request should itemize the modifications to the original project/permit.

5.2 Permit Fees

415 ILCS 5./12.2 requires the following permit fees for the following types of permits:

Permit Type	**Fee**	**Design P.E.**
Municipal Sludge Generator	$2,500	N/A
Industrial Sludge	$2,500	N/A
Sludge User	$5,000	N/A
Sewer Construction	$100 $400 $800 $1,200 $2,400	(1) (2 to 20) (21 to 100) (101 to 499) (500 or more)
Industrial Construction/No Pretreatment (1)	$1,000	N/A
Industrial Construction/Pretreatment - No Toxics (2)	$3,000	N/A
Industrial Construction/Pretreatment - Toxics (3)	$6,000	N/A

(1) The industrial wastewater source does not require pretreatment prior to discharge to the publicly owned treatment works or the publicly regulated treatment works.

(2) The industrial wastewater sources require pretreatment of the wastewater for non-toxic pollutants prior to discharge to the publicly owned treatment works or the publicly regulated treatment works.

(3) The industrial wastewater sources require pretreatment of the wastewater for toxic pollutants prior to discharge to the publicly owned treatment works or the publicly regulated treatment works.

6. Certificate by Design Engineer

6.1 The Design Engineer should complete this section. This certificate must be provided by all applicants for a construction permit. The Illinois Professional Engineering Act requires that engineers practicing in Illinois be registered in Illinois.

7. Certifications and Approvals for Permits

7.1.1 This certificate applies to the person, firm, or other entity which intends to construct the proposed sewer, wastewater source or treatment works. The applicant to construct is the person, firm, agency or the entity paying for the cost of construction.

An application submitted by a corporation must be signed by a principal executive officer of at least the level of vice president, or his duly authorized representative, if such representative is responsible for the overall operation of the facility from which the discharge described in the application form originates. In the case of a partnership of a sole proprietorship, the application must be signed by a general partner or the proprietor respectively. In the case of a publicly owned facility, the application must be signed by either a principal executive officer, ranking elected official or other duly authorized employee.

7.1.2 The certificate applies to the person, agency, firm, or other entity which owns or is responsible for the operation and maintenance of the proposed project.

7.2 Provide the name of the applicant as it is officially or legally referred to, i.e., the Springfield Metro Sanitary District, Metropolitan Water Reclamation District of Greater Chicago, the City of Marion, or the Super Deluxe Development Corporation. Do not use colloquial names as a substitute for the official name. This must be certified by the city clerk, village clerk, sanitary district clerk, etc. for governmental bodies.

7.3 The mailing address of the applicant should be the complete mailing address as its main office. This often will not be the same address as is used to designate the location of the work or activity.

7.4 These certificates apply to the owners of the intercepting sewers to which the project will be tributary. This section must be completed even for projects where the intercepting sewer is owned by the same entity as the receiving treatment works. The Additional Certificate by Intermediate Sewer Owner: must be completed if intermediate sewers are owned by more than one governing body. If additional certifications are required, please supply the required information on a plain sheet of paper and attach hereto.

7.5 35 Ill. Adm. Code 309.222(b) indicates that permit applications for sewer construction or modification shall be accompanied by signed statements from the owners of all intermediate receiving sewers and the receiving treatment works certifying that their facilities have adequate capacity to transport and/or treat the wastewater that will be added through the proposed sewer without violating any provisions of the Act and Subtitle C, Chapter I. Therefore, it will be necessary to have all such owners provide a certification as required by Subtitle C, Chapter I.

Note: Original signatures on the application forms must be submitted to the Agency. Original signatures are also required on other application forms.

MWRDGC Service Area -- A copy of an approved permit from MWRDGC may be submitted in lieu of a signed WPC-PS-1 form. An unsigned WPC-PS-1 form and Schedule A/B are required with any MWRDGC permit submitted to the Agency.

This form must be submitted to:

Illinois Environmental Protection Agency
Permit Section, Division of Water Pollution Control
1021 North Grand Avenue East
P.O. Box 19276
Springfield, IL 62794-9276

Illinois Environmental Protection Agency

1021 North Grand Avenue East • P.O. Box 19276 • Springfield • Illinois • 62794-9276 • (217) 782-3397

For IEPA Use Only

Application for Permit or Construction Approval
WPC-PS-1

This form must be typewritten or printed legibly. This form may be completed manually or online using Adobe Reader, a copy of it saved locally, printed, and signed before it is submitted to:

Illinois Environmental Protection Agency
Permit Section, Division of Water Pollution Control
1021 North Grand Avenue East
P.O. Box 19276
Springfield, IL 62794-9276

Reset All Fields

1. Owner Name: Equilon Enterprises LLC d/b/a Shell Oil Products US (Shell)

Name of Project: PWY Steam Enhanced Extraction Groundwater Treatment System

Project Location Address (include nearest street and city address): 143 E 8th Street

City: Roxana Zip Code: 63084

Township: 5N County: Madison

2. Brief Description of the Project:

Installation and operation of an oil-water separator, air stripper, bag filters, and liquid-phase activated carbon vessels to pre-treat groundwater collected by the proposed Steam Enhanced Extraction (SEE) System. After successful treatment, liquids will be discharged to the Roxana Wastewater Treatment Plant (WWTP) via the public stormwater system connection on site.

3. Documents being Submitted: If the Project involves any of the items listed below, submit the corresponding schedule, and check the appropriate boxes

	Schedule		Schedule
Private Sewer Connection/Extensions	A/B ☐	Spray Irrigation	H ☐
Sewer Extension Construction Only	C ☐	Septic Tanks	I ☐
Sewage Treatment Works	D ☐	Industrial Treatment/Pretreatment	J ☒
Excess Flow Treatment	E ☐	Waste Characteristics	N ☒
Lift Station/force Main	F ☐	Erosion Control	P ☐
Fast Track Service Connection	FTP ☐	Trust Disclosure	T ☐
Sludge Disposal	G ☐		

Plans:

Title: See Appendix A - Process Flow Diagram No. of Pages:

Specifications:

Title: See Appendices B through E - Vendor Specification Sheets No. of Books/Pages:

Other Documents: (Please specify)

3.1 Illinois Historic Preservation Agency approval letter ○ Yes ◉ No

(If you have a copy of the IHPA approval letter, please send in with the Permit Application Package)

4. Land Trust: Is the project identified in item Number 1 therein, for which a permit is requested, to be constructed on land which is the subject of a trust? ○ Yes ◉ No

If yes, Schedule T (Trust Disclosure) must be completed and item 7.1.1 must be signed by a beneficiary trustee or trust officer.

5. This is an application for (Check appropriate box):

◉ A. Joint Construction and Operating Permit

○ B. Authorization to Construct (See Instructions) NPDES Permit No. IL00: _____ Issuance Date: _____

○ C. Construction Only Permit (Does Not Include Operations)

○ D. Operate Only Permit (Does Not Include Construction)

○ E. Supplemental Permit Request to Existing State Construction or Operating Permit No.: _____ Issuance Date: _____

6. Certifications and Approval

6.1 Certificate by Design Engineer (When required: refer to instructions)

I hereby certify that I am familiar with the information contained in this application, including the attached schedules indicated above, and that to the best of my knowledge and belief such information is true, complete and accurate. The plans and specifications (specifications other than Standard Specifications or local specifications on file with this Agency) as described above were prepared by me or under my direction.

Licensed Professional Engineer's Name: Wendy M. Pennington

Licensed Professional Engineer's Title: Project Manager

Registration Number: 062.064098 License Expiration Date: November 2023

Company: AECOM

Street Address: 100 North Broadway PO Box: _____

City: St. Louis State: MO Zip + 4: 63102

Email Address: wendy.pennington@aecom.com Phone: 314-452-8929

Printed Name: Wendy M. Pennington

_____
Original Signature

_____
Date

Licensed Professional Engineer's Seal

7. Certifications and Approvals for Permits:

7.1 Certificate by Applicant(s):

I/We hereby certify that I/we have read and thoroughly understand the conditions and requirements of this Application, and am/are authorized to sign this application in accordance with the Rules and Regulations of the Illinois Pollution Control Board. I/we hereby agree to conform with the Standard conditions and with any other Special Conditions made part of this Permit.

7.1.1 Name of Applicant for Permit to Construct: Leroy Bealer

Title: Principal Program Manager Organization: Shell Oil Products US (Shell)

Street Address: 128 East Center Street PO Box: _____

City: Nazareth State: PA Zip + 4: 18064

Email Address: leroy.bealer@shell.com Phone: 484-632-7955

Printed Name: Leroy Bealer

_____ _____
Original Signature Date

7.1.2 Name of Applicant for Permit to Own and Operate: Wendy Pennington

Title: Project Manager Organization: AECOM

Street Address: 100 N. Broadway 20th Floor PO Box:

City: St. Louis State: MO Zip + 4: 63102

Email Address: wendy.pennington@aecom.com Phone: 314-429-0100

Printed Name: Wendy Pennington

Original Signature Date

7.2 Attested (Required When Applicant is a Unit of Government)

Title:

City clerk, Village Clerk, Sanitary District Clerk, etc.)

Original Signature Date

7.3 Applications from non-governmental applicants which are not signed by the owner, must be signed by a principal executive officer of at least the level of vice president, or a duly authorized representative.

7.4 Certificate by Intermediate Sewer Owner

I hereby certify that (Please check one):

○ 1. The sewers to which this project will be tributary have adequate reserve capacity to transport the wastewater that will be added by this project without causing a violation of the Illinois Environmental Protection Act or Subtitle C. Chapter I, or

○ 2. The Illinois Pollution Control Board, in PCB _____ dated _____ granted a variance from Subtitle C, Chapter I to allow construction of facilities that are the subject of this application.

Name and location of sewer system to which this project will be tributary:

Sewer System Owner:

Address:

City: State: Zip + 4:

Email Address: Phone:

Printed Name:

Original Signature Date

7.4.1 Additional Certificate by Intermediate Sewer Owner

I hereby certify that (Please check one):

- ○ 1. The sewers to which this project will be tributary have adequate reserve capacity to transport the wastewater that will be added by this project without causing a violation of the Illinois Environmental Protection Act or Subtitle C. Chapter I, or
- ○ 2. The Illinois Pollution Control Board, in PCB _____ dated _____ granted a variance from Subtitle C, Chapter I to allow construction of facilities that are the subject of this application.
- ○ 3. Not applicable.

Name and location of sewer system to which this project will be tributary:

_____

Sewer System Owner: _____

Address: _____

City: _____ State: ____ Zip + 4: _____

Email Address: _____ Phone: _____

Printed Name: _____

_____ _____

Original Signature Date

7.5 Certificate by Waste Treatment Works Owner

I hereby certify that (Please check one):

- ○ 1. The wastewater treatment plant to which this project will be tributary has adequate reserve capacity to treat the wastewater that will be added by this project without causing a violation of the Illinois Environmental Protection Act or Subtitle C. Chapter I, or
- ○ 2. The Illinois Pollution Control Board, in PCB _____ dated _____ granted a variance from Subtitle C, Chapter I to allow construction and operation of the facilities that are the subject of this application.
- ○ 3. I also certify that, if applicable, the industrial waste discharges described in the application are capable of being treated by treatment works.
- ○ 4. Not applicable.

Name of Waste Treatment Works: _____

Waste Treatment Works Owner: Village of Roxana

Address: _____

City: _____ State: ____ Zip + 4: _____

Email Address: _____ Phone: _____

Printed Name: _____

_____ _____

Original Signature Date

Save Form with New Name

Print Form

Instructions for Application for Construction/Operation Permit for Industrial Treatment/Pretreatment Works
Schedule J

This application form is intended for applications for Permits or Authorizations to Construct or Permits to Operate industrial treatment works or pretreatment works. Schedule J must be submitted with a WPC-PS-1 Form.

All blanks must be filled. When the question is not applicable to your project write "not applicable" or "N.A."

1.1 The name of the project must be the same as that indicated in WPC-PS-1.

1.2.1 Give the location of the discharge point to the nearest quarter section including section, township, range and principal meridian.

1.2.2 Give the location of the discharge point and degrees, minutes, and seconds by interpolation from a quadrangle map.

1.2.3 Name of U.S. Geological Survey Quandangle Map used in making above determinations.

2. Such a description and schematic waste flow diagram should show the flow of the water from the source to the treatment works. The diagram should specifically include both routine and potential sources of contamination. It may be that information included for this subject could be included on the schematic diagram required in Part 3 below. If this is the case, so indicate and do not duplicate other information provided.

3.1 A schematic wastewater flow diagram must be submitted. It should generally conform to the following description:

A line drawing of waste water flow through the facility producing the proposed discharges. Average flow rates should be shown for various waste waters. Specific treatment processes are to be indicated.

A location map is also required. The map should generally conform to the following:

A map showing the location of each discharge structure including any and all outfall devices, dispersive devices, and non-structural points of discharge. The usual meridian arrow showing north as well as the map scale must be shown. On all maps of rivers, the direction of the current is to be indicated by an arrow. Preferably this location map should be done on a copy of U.S. Geological Survey Quadrangle Map for the area involved.

Plans and specifications: For instruction on completion or plans and specifications please refer to the instructions for Schedule D Treatment Works Item 3.

4. Receiving Stream: Please refer to the instructions on receiving stream for Schedule D - Item 4. If the industrial waste treatment or pretreatment is tributary to a municipal sanitary, storm, or combined sewer, signatures of the appropriate municipal or sanitary district official should be provided on Form WPC-PS-1 in Items 5.5 and 5.6 and a current copy of the industrial waste ordinance must be provided.

5. The Agency's design criteria mandates that waste treatment facilities shall be located at an elevation which is not subject to flooding or otherwise be adequately protected against flood damage. Therefore, it will not be acceptable to include in a design the possibility of the waste treatment facilities being subject to flooding at any time regardless of the extent of the flooding.

6. The approximate time schedule is requested to allow the scheduling of Agency field engineering personnel to begin visits to the waste treatment facility site. The date of completion and the date of operation are expected to be essentially the same. The 100 percent design load to be reached by the year indicated is essentially the design year at which time additional facilities must be provided to treat additional waste load to the treatment plant if necessary.

7.5 Contact the Illinois Water Survey in Urbana.

7.6 See the definition of dilution ratio in Chapter 3 Illinois Pollution Control Board Regulations.

8.1.2 Use maximum daily flow for last twelve months.

11. Rule 601(a) of the Illinois Pollution Control Board Chapter 3 Regulations indicates that all treatment works and associated

facilities shall be so constructed and operated as to minimize violations of the applicable standards during such contingencies as flooding, adverse weather, power failure, equipment failure, or maintenance through such measures as multiple units, holding tanks, duplicate power sources or other measures.

12. A Schedule G is necessary if sludge must be disposed of from this facility.

13. Submit Schedule N. Use the instructions for Schedule N for completing the information required.

14. The requirements for Operator Certification are given in Part 12 of Chapter 3 Illinois Pollution Control Board Regulations.

FOR IEPA USE:
LOG #
DATE RECEIVED:

ILLINOIS ENVIRONMENTAL PROTECTION AGENCY
DIVISION OF WATER POLLUTION CONTROL
PERMIT SECTION

Springfield, Illinois 62706

SCHEDULE J INDUSTRIAL TREATMENT WORKS CONSTRUCTION OR PRETREATMENT WORKS

1. NAME AND LOCATION:
   - 1.1 Name of project PWY Steam Enhanced Extraction Groundwater Treatment System
   - 1.2 Plant Location
     - 1.2.1 NW (Quarter Section) 34 (Section) 5N (Township) 9W (Range) _____ (P.M.)
     - 1.2.2 Latitude 38 deg. 50 min. 30 sec. "NORTH
     - 1.2.3 Longitude 90 deg. 04 min. 34 sec. "WEST
     - 1.2.3 Name of USGS Quadrangle Map (7.5 or 15 minute) Woodriver, IL-MO (7.5 minute)
2. NARRATIVE DESCRIPTION AND SCHEMATIC WASTE FLOW DIAGRAM: (see instructions)

   See Application Report and Appendix A - Process Flow Diagram

   - 2.1 PRINCIPAL PRODUCTS:
   - 2.2 PRINCIPAL RAW MATERIALS:
3. DESCRIPTION OF TREATMENT FACILITIES:
   - 3.1 Submit a flow diagram through all treatment units showing size, volumes, detention times, organic loadings, surface settling rate, weir overflow rate, and other pertinent design data. Include hydraulic profiles and description of monitoring systems.
   - 3.2 Waste Treatment Works is: Batch ☐ , Continuous ☒ , No. of Batches/day _____ , No. of Shifts/day _____
   - 3.3 Submit plans and specifications for proposed construction.
   - 3.4 Discharge is: Existing ☐ ; Will begin on 05/01/23 .
4. DIRECT DISCHARGE IS TO: Receiving Stream ☐ Municipal Sanitary Sewer ☐ Municipal storm or municipal combined sewer ☐
   If receiving stream or storm sewer are indicated complete the following:
   Name of receiving stream _____ ; tributary to _____ ;
   tributary to _____ ; tributary to _____ ;
5. Is the treatment works subject to flooding? Yes ☐ No ☐ If so, what is the maximum flood elevation of record (in reference to the treatment works datum) and what provisions have been made to eliminate the flooding hazard?
6. APPROXIMATE TIME SCHEDULE: Estimated construction schedule:
   Start of Construction 11/01/22 ; Date of Completion 05/01/23
   Operation Schedule 05/01/23 ; Date Operation Begins 05/01/23
   100% design load to be reached by year 2023 .
7. DESIGN LOADINGS
   - 7.1 Design population equivalent (one population equivalent is 100 gallons of wastewater per day, containing 0.17 pounds of BOD_5 and 0.20 pounds of suspended solids;
     BOD N/A ; Suspended Solids N/A ; Flow N/A .
   - 7.2 Design Average Flow Rate 0.058 MGD.

7.3 Design Maximum Flow Rate 0.072 MGD.

7.4 Design Minimum Flow Rate 0 MGD.

7.5 Minimum 7-day, 10-year low flow N/A cfs N/A MGD.

Minimum 7-day, 10-year flow obtained from N/A

7.6 Dilution Ratio N/A ;_____.

8. FLOW TO TREATMENT WORKS (if existing):

8.1 Flow (last 12 months)

8.1.1 Average Flow N/A MGD

8.1.2 Maximum Flow N/A MGD

8.2 Equipment used in determining above flows .

9. Has a preliminary engineering report for this project been submitted to this Agency for Approval?

Yes ☐ No ☒ . If so, when was it submitted and approved. Date Submitted _____

Certification # _____

Dated _____

10. List Permits previously issued for the facility:

Construction Permit, Application No. 22020023, ID No. 119090AAO, issued 5/3/2022
Revised FESOP, Application No. 12040025, ID No. 119090AAO, issued 5/3/2022

11. Describe provisions for operation during contingencies such as power failures, flooding, peak loads, equipment failure, maintenance shut downs and other emergencies.

Back up generators will be onsite to accomodate for power losses. Equipment staging area is over 10 feet above lowest point on site and site has no history of large scale flooding. System can be monitored electroically, allowing for real time adjustments to be made if equipment fails, there is an onsite emergency, etc.

12. Complete and submit Schedule G if sludge disposal will be required by this facility.

13. WASTE CHARACTERISTICS: Schedule N must be submitted.

14. TREATMENT WORKS OPERATOR CERTIFICATION: List names and certification numbers of certified operators:

An on-site certified operator will supervise treatment works operations.

INSTRUCTIONS FOR SCHEDULE N - WASTE CHARACTERISTICS

This schedule must be submitted to show raw waste characteristics, effluent quality, and upstream and downstream quality of the receiving waters, sludge characteristics and other wastewater characteristics as required for the various schedules.

1. The name of the project must be the same as that indicated in WPC-PS-1.

2. Flow data

   2.1 Indicate existing, if applicable, and proposed or present design average flow.

   2.2 Indicate existing, if applicable, or proposed or present design maximum flow depending on the schedule originating the request.

   2.3 The information submitted to the Agency for temperature must be sufficient to prove that violations of the temperature portion, 203(i) of the Illinois Pollution Control Board Regulations Chapter 3 will not occur.

   In the case of discharges from power plants, a graphical description of the discharge plume must be provided to the Agency which describes the various isotherm regimes in the plume and defines the boundaries of the discharge plume in relation to the receiving stream.

   The definition of mixing zone is given in Rule 201(a) of the Illinois Pollution Control Board's Regulations. Make sure you are using the latest Illinois Pollution Control Board's interpretation of this definition - mixing zone.

   2.6 The flow rate in the receiving stream at the time of stream sampling must be indicated.

3. Chemical Characteristics: The applicant must prove that the facility if permitted, will not cause violations of the Environmental Protection Act or of Regulations adopted by the Board pursuant to the Act. If the characteristics are not applicable so indicate with the letters NTF (not tested for).

   For existing facility, the type of sample (grab, composite) and the number of samples taken should be indicated on Schedule N. The sampling points should be indicated on an appropriately labeled process flow sketch for raw wastewater and treated effluent. The process flow sketch should show all wastewater influent points to the treatment works before ultimate discharge.

   Please review the following comments prior to proceeding.

   3.1 The characteristics must show the average concentration of the particular waste parameter in the design year except when the schedule is being submitted to depict the current conditions.

   3.2 For existing domestic waste treatment works, as a minimum the influent and effluent analyses should include ammonia nitrogen, fecal coliform, (effluent only), nitrite and nitrate nitrogen, pH, phosphorous as p, suspended solids, total dissolved solids and biochemical oxygen demand (5 day).

   3.3 The influent and effluent should be analyzed for chemical parameters appropriate to reflect industrial discharges into the sewer system tributary to the treatment works. Guidelines for such additional analyses are contained in Table 1, which may also be used by industrial discharges as minimum required analysis guidelines.

   3.4 The effluent parameter concentrations shown must reflect the average and maximum concentrations of the treatment works or discharge effluent.

   3.5 An analysis must be performed on the influent and effluent, if it is existing, for each parameter shown on Table 1 for the appropriate industry.

   3.6 If the proper industrial category is not provided on Table 1, the consulting engineer should write the Illinois Environmental Protection Agency requesting a letter with a statement of the required parameters or use the parameters for a similar category on Table 1.

3.7 If background concentration, Rule 401(b), is considered by the applicant to be a factor in the allowable contaminants being discharged, submit an analysis of the water supply showing the concentration of the applicable parameters.

3.8 If any constituent level in any discharge or effluent exceeds the water quality standard then analyses must be performed for that parameter upstream and downstream in the receiving stream. The flow rate in the receiving stream at the time of stream sampling must be specified.

3.9 For proposed facilities approximations should be made and analysis performed in accordance with these items and Table 1.

3.10 The analysis must be performed in accordance with the Standard Methods for the Examination of Water and Wastewater, 13th edition or with the most current later edition or with other generally accepted procedures approved by the Agency. The methods indicated in Table A of the U.S. Environmental Protection Agency National Pollutant Discharge Elimination System Application Form Standard Form Instructions will be considered acceptable to the agency unless noted otherwise in subsequent changes to these instruction forms.

3.11 Upstream and downstream analyses will not be required for pretreatment facilities. However, if current data is not available regarding receiving treatment works effluent quality, additional data may be requested.

3.12 Upstream and downstream analyses will not be required if the minimum, 7-day, 10-year low flow of the stream is zero (0) c.f.s. The effluent quality must meet water quality standards.

This Agency is authorized to require this information under Illinois Revised Statutes, 1979, Chapter 111 1/2, Section 1039. Disclosure of this information is required under that section. Failure to do so may prevent this form from being processed and could result in your application being denied.

For IEPA Use:

LOG #

DATE RECEIVED:

ILLINOIS ENVIRONMENTAL PROTECTION AGENCY
DIVISION OF WATER POLLUTION CONTROL
PERMIT SECTION
Springfield, Illinois 62794-9276

SCHEDULE N WASTE CHARACTERISTICS

1. Name of Project PWY Steam Enhanced Extraction Groundwater Treatment System

2. FLOW DATA

	EXISTING	PROPOSED-DESIGN
2.1 Average Flow (gpd)	0	57,600
2.2 Maximum Daily Flow (gpd)	0	72,000

2.3 TEMPERATURE

Time of Year	Avg. Intake Temp. F	Avg. Effluent Temp. F	Max. Intake Temp F.	Max. Effluent Temp F.	Max. Temp. Outside Mixing Zone F
SUMMER					
WINTER					

2.4 Minimum 7-day, 10-year flow: _____ cfs _____ MGD.

2.5 Dilution Ratio: _____ :_____

2.6 Stream flow rate at time of sampling _____ cfs _____ MGD.

3. CHEMICAL CONSTITUENT Existing Permitted Conditions ☐ ; Existing conditions ☐ ; Proposed Permitted Conditions ☒ .

Type of sample: ☐ grab (time of collection _____); ☐ composite (Number of samples per day _____)

(see instructions for analyses required)

CONSTITUENT	RAW WASTE (mg/l)	TREATED EFFLUENT Avg. (mg/l) Max.	UPSTREAM (mg/l)	DOWNSTREAM SAMPLES (mg/l)
Ammonia Nitrogen (as N)	NTF	NTF	N/A	N/A
Arsenic (total)	NTF	NTF	N/A	N/A
Barium	NTF	NTF	N/A	N/A
Boron	NTF	NTF	N/A	N/A
BOD_5	NTF	NTF	N/A	N/A
Cadmium	NTF	NTF	N/A	N/A
Carbon Chloroform Extract	NTF	NTF	N/A	N/A
Chloride	NTF	NTF	N/A	N/A
Chromium (total hexavalent)	NTF	NTF	N/A	N/A
Chromium (total trivalent)	NTF	NTF	N/A	N/A

CONSTITUENT	RAW WASTE (mg/l)	TREATED EFFLUENT Avg. (mg/l) Max.	UPSTREAM (mg/l)	DOWNSTREAM SAMPLES (mg/l)
Copper	NTF	NTF	N/A	N/A
Cyanide (total)	NTF	NTF	N/A	N/A
Cyanide (readily released @ 150° F & pH 4.5)	NTF	NTF	N/A	N/A
Dissolved Oxygen	NTF	NTF	N/A	N/A
Fecal Coliform	NTF	NTF	N/A	N/A
Fluoride	NTF	NTF	N/A	N/A
Hardness (as Ca CO_3)	NTF	NTF	N/A	N/A
Iron (total)	NTF	NTF	N/A	N/A
Lead	NTF	NTF	N/A	N/A
Manganese	NTF	NTF	N/A	N/A
MBAS	NTF	NTF	N/A	N/A
Mercury	NTF	NTF	N/A	N/A
Nickel	NTF	NTF	N/A	N/A
Nitrates (as N)	NTF	NTF	N/A	N/A
Oil & Grease (hexane solubles or equivalent)	NTF	NTF	N/A	N/A
Organic Nitrogen (as N)	NTF	NTF	N/A	N/A
pH	NTF	NTF	N/A	N/A
Phenols	NTF	NTF	N/A	N/A
Phosphorous (as P)	NTF	NTF	N/A	N/A
Radioactivity	NTF	NTF	N/A	N/A
Selenium	NTF	NTF	N/A	N/A
Silver	NTF	NTF	N/A	N/A
Sulfate	NTF	NTF	N/A	N/A
Suspended Solids	NTF	NTF	N/A	N/A
Total Dissolved Solids	NTF	NTF	N/A	N/A
Zinc	NTF	NTF	N/A	N/A
Others				
BENZENE	~950	<0.14	N/A	N/A
N/A = Not Applicable				
NTF = Not Tested For				
Upstream and downstream	samples are not	applicable because the	unit discharges	to a POTW.

Attachment F
Steam Piping Sizing

ASSUMPTIONS

Steam Pressure	125 PSI-g	Kinematic Viscosity	2.08E-03 ft^2/min	Steam Flow Rate, Total	10090.95 lb/hr		
Steam Pressure	139.6959 PSI-a	Density	3.10E-01 lb/ft3	Steam Flow Rate, Side B	4111.127542 lb/hr		
Dynamic Viscosity	1.08E-05 lb/(ft*s)	Specific Volume	3.23E+00 ft^3/lb	Steam Flow Rate, Per Injector	124.5796225 lb/hr		

NODE			COMPONENT	FLOW RATE	COMPONENT INSIDE DIAMETER	CROSS-SECTIONAL VELOCITY	CROSS-SECTIONAL VELOCITY	VELOCITY PRESSURE	PIPE LENGTH	FITTING LOSS COEFFICIENT	REYNOLD'S NUMBER	ROUGHNESS	FRICTION FACTOR	PIPING PRESSURE LOSSES	FITTING PRESSURE LOSSES	COMBINED PRESSURE LOSSES	SECTIONAL PRESSURE LOSSES
FROM	TO	#	TYPE	(lb/h)	(INCHES)	(FT/MIN)	(FT/S)	(" OF H20)	(FEET)	Co	(DIM)	E	(DIM)	(" OF H20)	(" OF H20)	(" OF H20)	(" OF H20)
		0	BOILER	10090.95													
		1	MAIN, B SIDE	4111.13	3	4508.606404	75.14344007	5.229604789	20.00		540847.32	0.00015	0.010536549	4.408159066	0	4.408159066	
		2	90 deg ELBOW	4111.13	3	4508.606404	75.14344007	5.229604789		0.3	540847.32	0.00015	0.010536549	0	1.568881437	1.568881437	
		3	MAIN, B SIDE	4111.13	3	4508.606404	75.14344007	5.229604789	40.00		540847.32	0.00015	0.010536549	8.816318132	0	8.816318132	
		4	TEE, BRANCHED	4111.13	3	4508.606404	75.14344007	5.229604789		1	540847.32	0.00050	0.013223022	0	5.229604789	5.229604789	20.02296342
		5	MAIN	3363.65	2	8299.934516	138.3322419	17.7228497	20.00		663767.16	0.00015	0.011341752	24.12098007	0	24.12098007	
			90 deg ELBOW	3363.65	2	8299.934516	138.3322419	17.7228497		0.3	663767.16	0.00015	0.011341752	0	5.31685491	5.31685491	
		6	MAIN	3363.65	2	8299.934516	138.3322419	17.7228497	3.33		663767.16	0.00015	0.011341752	4.020159326	0	4.020159326	
			TEE, LATERAL	3363.65	2	8299.934516	138.3322419	17.7228497		0.2	663767.16	0.00015	0.011341752	0	3.54456994	3.54456994	
		7	MAIN	3239.07	2	7992.529534	133.2088256	16.4343572	23.33		639183.20	0.00015	0.011341752	26.09521663	0	26.09521663	
			TEE, LATERAL	3239.07	2	7992.529534	133.2088256	16.4343572		0.2	639183.20	0.00015	0.011341752	0	3.28687144	3.28687144	
		8	MAIN	3114.49	2	7685.124552	128.0854092	15.19448705	6.67		614599.23	0.00015	0.011341752	6.893283511	0	6.893283511	
			TEE, LATERAL	3114.49	2	7685.124552	128.0854092	15.19448705		0.2	614599.23	0.00015	0.011341752	0	3.038897411	3.038897411	
		9	MAIN	2989.91	2	7377.71957	122.9619928	14.00323927	10.00		590015.26	0.00015	0.011341752	9.529276079	0	9.529276079	
			TEE, LATERAL	2989.91	2	7377.71957	122.9619928	14.00323927		0.2	590015.26	0.00015	0.011341752	0	2.800647854	2.800647854	
		10	MAIN	2865.33	2	7070.314588	117.8385765	12.86061384	6.67		565431.29	0.00015	0.011341752	5.834475689	0	5.834475689	
			TEE, LATERAL	2865.33	2	7070.314588	117.8385765	12.86061384		0.2	565431.29	0.00015	0.011341752	0	2.572122769	2.572122769	
		11	MAIN	2740.75	2	6762.909606	112.7151601	11.76661077	3.33		540847.32	0.00015	0.011341752	2.669076973	0	2.669076973	
			TEE, LATERAL	2740.75	2	6762.909606	112.7151601	11.76661077		0.2	540847.32	0.00015	0.011341752	0	2.353322155	2.353322155	
		12	MAIN	2616.17	2	6455.504624	107.5917437	10.72123007	3.33		516263.35	0.00015	0.011341752	2.431948234	0	2.431948234	
			TEE, LATERAL	2616.17	2	6455.504624	107.5917437	10.72123007		0.2	516263.35	0.00015	0.011341752	0	2.144246013	2.144246013	
		13	MAIN	2491.59	2	6148.099642	102.4683274	9.724471715	3.33		491679.38	0.00015	0.011341752	2.205850724	0	2.205850724	
			90 deg ELBOW	2491.59	2	6148.099642	102.4683274	9.724471715		0.3	491679.38	0.00015	0.011341752	0	2.917341514	2.917341514	
		14	MAIN	2491.59	2	6148.099642	102.4683274	9.724471715	3.33		491679.38	0.00015	0.011341752	2.205850724	0	2.205850724	
			TEE, LATERAL	2491.59	2	6148.099642	102.4683274	9.724471715		0.2	491679.38	0.00015	0.011341752	0	1.944894343	1.944894343	
		15	MAIN	2367.01	2	5840.69466	97.34491099	8.776335722	3.33		467095.41	0.00015	0.011341752	1.990780477	0	1.990780477	
			TEE, LATERAL	2367.01	2	5840.69466	97.34491099	8.776335722		0.2	467095.41	0.00015	0.011341752	0	1.755267144	1.755267144	
		16	MAIN	2242.43	2	5533.289678	92.22149463	7.876822089	3.33		442511.44	0.00015	0.011341752	1.786739247	0	1.786739247	
			TEE, LATERAL	2242.43	2	5533.289678	92.22149463	7.876822089		0.2	442511.44	0.00015	0.011341752	0	1.575364418	1.575364418	
		17	MAIN	2117.85	2	5225.884695	87.09807826	7.025930814	6.67		417927.47	0.00015	0.011341752	3.187454614	0	3.187454614	
			TEE, LATERAL	2117.85	2	5225.884695	87.09807826	7.025930814		0.2	417927.47	0.00015	0.011341752	0	1.405186163	1.405186163	
		18	MAIN	1993.27	2	4918.479713	81.97466189	6.223661897	6.67		393343.50	0.00015	0.011341752	2.823489208	0	2.823489208	
			TEE, LATERAL	1993.27	2	4918.479713	81.97466189	6.223661897		0.2	393343.50	0.00015	0.011341752	0	1.244732379	1.244732379	
		19	MAIN	1868.69	2	4611.074731	76.85124552	5.470015339	10.00		368759.54	0.00015	0.011341752	3.722373468	0	3.722373468	
			TEE, LATERAL	1868.69	2	4611.074731	76.85124552	5.470015339		0.2	368759.54	0.00015	0.011341752	0	1.094003068	1.094003068	
		20	MAIN	1744.11	2	4303.669749	71.72782915	4.76499114	10.00		344175.57	0.00015	0.011341752	3.242600888	0	3.242600888	
			TEE, LATERAL	1744.11	2	4303.669749	71.72782915	4.76499114		0.2	344175.57	0.00015	0.011341752	0	0.952998228	0.952998228	
		21	MAIN	1619.54	2	3996.264767	66.60441279	4.108589299	6.67		319591.60	0.00015	0.011341752	1.863944046	0	1.863944046	
			TEE, LATERAL	1619.54	2	3996.264767	66.60441279	4.108589299		0.2	319591.60	0.00015	0.011341752	0	0.82171786	0.82171786	
		22	MAIN	1494.96	2	3688.859785	61.48099642	3.500809817	13.33		295007.63	0.00015	0.011341752	3.17642536	0	3.17642536	
			TEE, LATERAL	1494.96	2	3688.859785	61.48099642	3.500809817		0.2	295007.63	0.00015	0.011341752	0	0.700161963	0.700161963	
		23	MAIN	1370.38	2	3381.454803	56.35758005	2.941652694	6.67		270423.66	0.00015	0.011341752	1.33453982	0	1.33453982	
			TEE, LATERAL	1370.38	2	3381.454803	56.35758005	2.941652694		0.2	270423.66	0.00015	0.011341752	0	0.588330539	0.588330539	
		24	MAIN	1245.80	2	3074.049821	51.23416368	2.431117929	16.67		245839.69	0.00015	0.011341752	2.757313679	0	2.757313679	
			TEE, LATERAL	1245.80	2	3074.049821	51.23416368	2.431117929		0.2	245839.69	0.00015	0.011341752	0	0.486223586	0.486223586	
		25	MAIN	1121.22	2	2766.644839	46.11074731	1.969205522	6.67		221255.72	0.00015	0.011341752	0.893369623	0	0.893369623	
			TEE, LATERAL	1121.22	2	2766.644839	46.11074731	1.969205522		0.2	221255.72	0.00015	0.011341752	0	0.393841104	0.393841104	
		26	MAIN	996.64	2	2459.239857	40.98733094	1.555915474	3.33		196671.75	0.00015	0.011341752	0.352936116	0	0.352936116	
			TEE, LATERAL	996.64	2	2459.239857	40.98733094	1.555915474		0.2	196671.75	0.00015	0.011341752	0	0.311183095	0.311183095	
		27	MAIN	872.06	2	2151.834875	35.86391458	1.191247785	16.67		172087.78	0.00015	0.011341752	1.351083703	0	1.351083703	
			TEE, LATERAL	872.06	2	2151.834875	35.86391458	1.191247785		0.2	172087.78	0.00015	0.011341752	0	0.238249557	0.238249557	
		28	MAIN	747.48	2	1844.429893	30.74049821	0.875202454	13.33		147503.81	0.00015	0.011341752	0.79410634	0	0.79410634	
			TEE, LATERAL	747.48	2	1844.429893	30.74049821	0.875202454		0.2	147503.81	0.00015	0.011341752	0	0.175040491	0.175040491	
		29	MAIN	622.90	2	1537.02491	25.61708184	0.607779482	3.33		122919.85	0.00015	0.011341752	0.137865684	0	0.137865684	
			TEE, LATERAL	622.90	2	1537.02491	25.61708184	0.607779482		0.2	122919.85	0.00015	0.011341752	0	0.121555896	0.121555896	
		30	MAIN	498.32	2	1229.619928	20.49366547	0.388978869	13.33		98335.88	0.00015	0.011341752	0.352936151	0	0.352936151	
			TEE, LATERAL	498.32	2	1229.619928	20.49366547	0.388978869		0.2	98335.88	0.00015	0.011341752	0	0.077795774	0.077795774	
		31	MAIN	373.74	2	922.2149463	15.3702491	0.218800614	3.33		73751.91	0.00015	0.011341752	0.049631597	0	0.049631597	
			TEE, LATERAL	373.74	2	922.2149463	15.3702491	0.218800614		0.2	73751.91	0.00015	0.011341752	0	0.043760123	0.043760123	
		32	MAIN	249.16	2	614.8099642	10.24683274	0.097244717	6.67		49167.94	0.00015	0.011341752	0.044117019	0	0.044117019	
			TEE, LATERAL	249.16	2	614.8099642	10.24683274	0.097244717		0.2	49167.94	0.00015	0.011341752	0	0.019448943	0.019448943	
		33	MAIN	124.58	2	307.4049821	5.123416368	0.024311179	3.33		24583.97	0.00015	0.011341752	0.005514627	0	0.005514627	
			TEE, LATERAL	124.58	2	307.4049821	5.123416368	0.024311179		0.2	24583.97	0.00015	0.011341752	0	0.004862236	0.004862236	
		##	HOSE TO WELL	124.58	1	1229.619928	20.49366547	0.388978869	20.00		49167.94	0.00022	0.013988041	1.305852548	0	1.305852548	
																	159.1086831
																	179.1316465 IN.H2O
																	6.464979303 PSI

Pw Pb - dP			
Pb	150	125	PSI
dP	6.464979303	6.464979303	PSI
%	4.31%	5.17%	

Max pressure drop	
20	%

Attachment G
2012-2013 GP-15, GP-16, GP-17 and GP-18 Sample Results

LEGEND

- PREDESIGN INVESTIGATION LOCATIONS
- PREVIOUS INVESTIGATION LOCATION OR EXISTING SITE FEATURE
- SVE UNDERGROUND SYSTEM PIPING (PUBLIC WORKS LEG)
- SVE ABOVE GROUND SYSTEM PIPING (PUBLIC WORKS LEG)
- CURRENT AND/OR FORMER PIPELINES
- NORFOLK SOUTHERN RAILROAD
- UNDERGROUND WATER LINE
- UNDERGROUND ELECTRIC LINE
- UNDERGROUND COMMUNICATIONS LINE
- UNDERGROUND BUCKEYE PIPELINE
- UNDERGROUND SEWER LINE
- UNCONFIRMED UNDERGROUND SEWER LINE
- UNDERGROUND AMEREN GAS LINE

NOTES:

1) CPT/DYE LIF PLUS SOIL BORING AND/OR GROUNDWATER PROFILE WERE PERFORMED AT INVESTIGATION LOCATIONS.
2) PETROLEUM PIPELINES SHOWN ARE BASED ON INFORMATION PROVIDED BY PHILLIPS 66

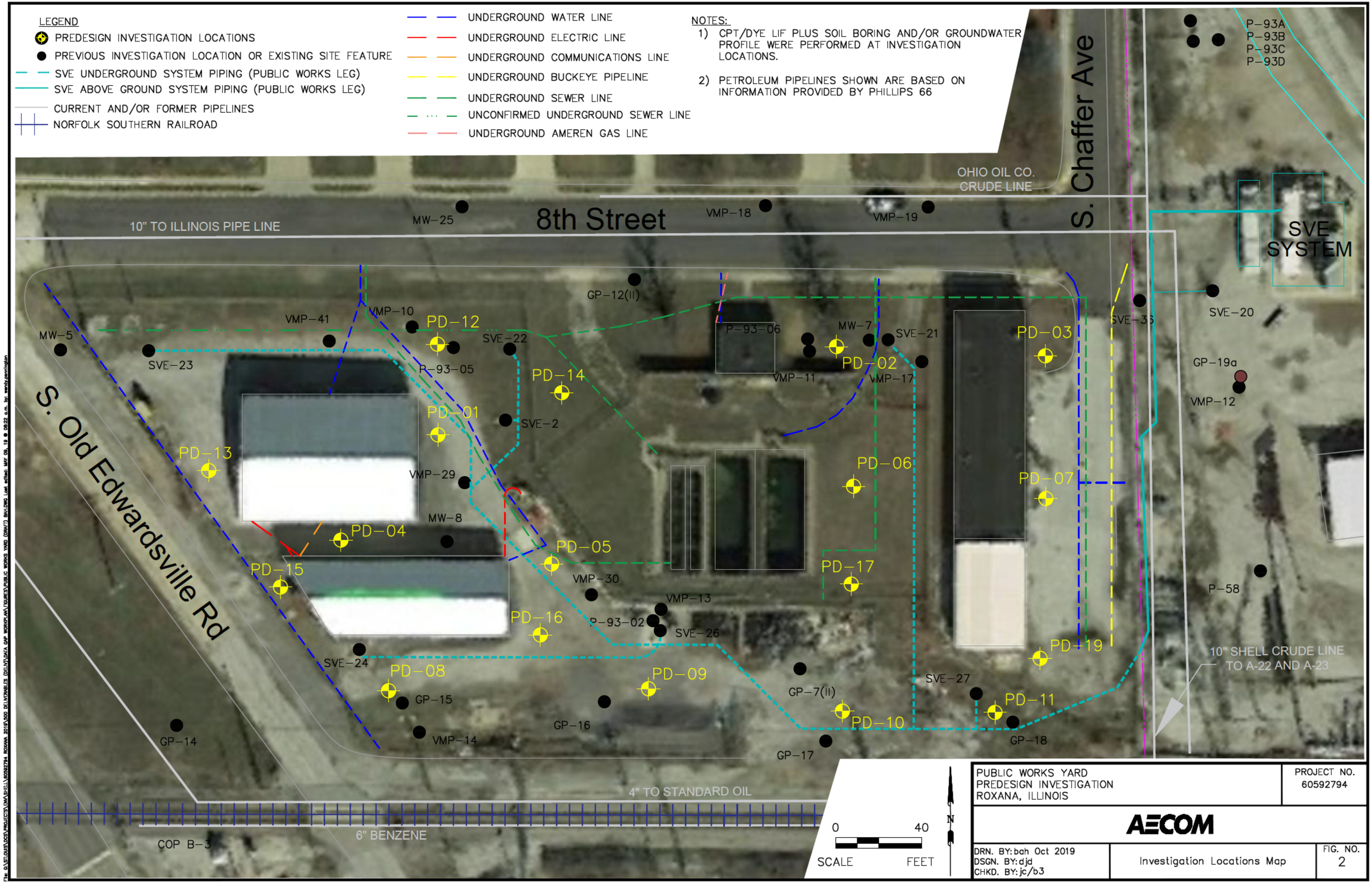

PUBLIC WORKS YARD PREDESIGN INVESTIGATION ROXANA, ILLINOIS	PROJECT NO. 60592794
AECOM	
DRN. BY: bah Oct 2019 DSGN. BY: djd CHKD. BY: jc/b3	Investigation Locations Map — FIG. NO. 2

SEE LAST PAGE OF TABLE FOR NOTES

ATTACHMENT G
GP BORINGS SOIL ANALYTICAL DATA 2012-2013

Location	Sample ID	Depth	Sample Date	1,1,1,2-Tetrachloroethane (mg/kg)			1,1,1-Trichloroethane (Methyl chloroform) (mg/kg)			1,1,2,2-Tetrachloroethane (mg/kg)			1,1,2-Trichloroethane (mg/kg)			1,1-Dichloroethane (mg/kg)		
				Result	Lab Quals	AECOM Quals	Result	Lab Quals	AECOM Quals	Result	Lab Quals	AECOM Quals	Result	Lab Quals	AECOM Quals	Result	Lab Quals	AECOM Quals
GP-15	GP-15-19	19 ft	12/18/2012	< 1.2	U		< 0.5	U		< 0.5	U		< 0.5	U		< 0.5	U	
GP-15	GP-15-29	29 ft	12/18/2012	< 0.0055	U		< 0.0022	U		< 0.0022	U		< 0.0022	U		< 0.0022	U	
GP-15	GP-15-37	37 ft	12/18/2012	< 12	U		< 4.9	U		< 4.9	U		< 4.9	U		< 4.9	U	
GP-15	GP-15-37-DUP	37 ft	12/18/2012	< 0.55	U		< 0.22	U		< 0.22	U		< 0.22	U		< 0.22	U	
GP-15	GP-15-47	47 ft	12/18/2012	< 3	U		< 1.2	U		< 1.2	U		< 1.2	U		< 1.2	U	
GP-15	GP-15-55	55 ft	12/18/2012	< 5	U		< 2	U		< 2	U		< 2	U		< 2	U	
GP-15	GP-15-74	74 ft	12/21/2012	< 0.57	U		< 0.23	U		< 0.23	U		< 0.23	U		< 0.23	U	
GP-15	GP-15-89	89 ft	12/21/2012	< 0.52	U		< 0.21	U		< 0.21	U		< 0.21	U		< 0.21	U	
GP-16	GP-16-23	23 ft	1/3/2013	< 0.0065	U		< 0.0026	U		< 0.0026	U		< 0.0026	U		< 0.0026	U	
GP-16	GP-16-42	42 ft	1/3/2013	< 0.57	U		< 0.23	U		< 0.23	U		< 0.23	U		< 0.23	U	
GP-16	GP-16-51	51 ft	1/3/2013	< 0.52	U		< 0.21	U		< 0.21	U		< 0.21	U		< 0.21	U	
GP-16	GP-16-57	57 ft	1/3/2013	< 0.52	U		< 0.21	U		< 0.21	U		< 0.21	U		< 0.21	U	
GP-16	GP-16-57-DUP	57 ft	1/3/2013	< 0.59	U		< 0.24	U		< 0.24	U		< 0.24	U		< 0.24	U	
GP-16	GP-16-77	77 ft	1/3/2013	< 0.49	U		< 0.19	U		< 0.19	U		< 0.19	U		< 0.19	U	
GP-16	GP-16-91	91 ft	1/7/2013	< 0.0048	U		< 0.0019	U		< 0.0019	U		< 0.0019	U		< 0.0019	U	
GP-17	GP-17-15	15 ft	1/7/2013	< 2.7	U	UJ	< 1.1	U	UJ	< 1.1	U	UJ	< 1.1	U	UJ	< 1.1	U	UJ
GP-17	GP-17-15-DUP	15 ft	1/7/2013	< 7	U	UJ	< 2.8	U	UJ	< 2.8	U	UJ	< 2.8	U	UJ	< 2.8	U	UJ
GP-17	GP-17-45	45 ft	1/7/2013	< 4.1	U	UJ	< 1.6	U	UJ	< 1.6	U	UJ	< 1.6	U	UJ	< 1.6	U	UJ
GP-17	GP-17-57	57 ft	1/7/2013	< 5.9	U	UJ	< 2.4	U	UJ	< 2.4	U	UJ	< 2.4	U	UJ	< 2.4	U	UJ
GP-17	GP-17-65	65 ft	1/7/2013	< 0.39	U	UJ	< 0.16	U	UJ	< 0.16	U	UJ	< 0.16	U	UJ	< 0.16	U	UJ
GP-18	GP-18-21	21 ft	1/8/2013	< 1.8	U	UJ	< 0.72	U	UJ	< 0.72	U	UJ	< 0.72	U	UJ	< 0.72	U	UJ
GP-18	GP-18-37	37 ft	1/8/2013	< 5.1	U	UJ	< 2	U	UJ	< 2	U	UJ	< 2	U	UJ	< 2	U	UJ
GP-18	GP-18-53	53 ft	1/8/2013	< 6.7	U	UJ	< 2.7	U	UJ	< 2.7	U	UJ	< 2.7	U	UJ	< 2.7	U	UJ
GP-18	GP-18-63	63 ft	1/8/2013	< 2.6	U	UJ	< 1.1	U	UJ	< 1.1	U	UJ	< 1.1	U	UJ	< 1.1	U	UJ

SEE LAST PAGE OF TABLE FOR NOTES

ATTACHMENT G
GP BORINGS SOIL ANALYTICAL DATA 2012-2013

Location	Sample ID	Depth	Sample Date	1,1-Dichloroethene (mg/kg)			1,1-Dichloropropene (mg/kg)			1,2,3-Trichlorobenzene (mg/kg)			1,2,3-Trichloropropane (mg/kg)			1,2,4-Trichlorobenzene (mg/kg)		
				Result	Lab Quals	AECOM Quals	Result	Lab Quals	AECOM Quals	Result	Lab Quals	AECOM Quals	Result	Lab Quals	AECOM Quals	Result	Lab Quals	AECOM Quals
GP-15	GP-15-19	19 ft	12/18/2012	< 0.5	U		< 1.2	U		< 1.2	U		< 1.2	U		< 1.2	U	
GP-15	GP-15-29	29 ft	12/18/2012	< 0.0022	U		< 0.0055	U		< 0.0055	U		< 0.0055	U		< 0.0055	U	
GP-15	GP-15-37	37 ft	12/18/2012	< 4.9	U		< 12	U		< 12	U		< 12	U		< 12	U	
GP-15	GP-15-37-DUP	37 ft	12/18/2012	< 0.22	U		< 0.55	U		< 0.55	U		< 0.55	U		< 0.55	U	
GP-15	GP-15-47	47 ft	12/18/2012	< 1.2	U		< 3	U		< 3	U		< 3	U		< 3	U	
GP-15	GP-15-55	55 ft	12/18/2012	< 2	U		< 5	U		< 5	U		< 5	U		< 5	U	
GP-15	GP-15-74	74 ft	12/21/2012	< 0.23	U		< 0.57	U		< 0.57	U		< 0.57	U		< 0.57	U	
GP-15	GP-15-89	89 ft	12/21/2012	< 0.21	U		< 0.52	U		< 0.52	U		< 0.52	U		< 0.52	U	
GP-16	GP-16-23	23 ft	1/3/2013	< 0.0026	U		< 0.0065	U		< 0.0065	U		< 0.0065	U		< 0.0065	U	
GP-16	GP-16-42	42 ft	1/3/2013	< 0.23	U		< 0.57	U		< 0.57	U		< 0.57	U		< 0.57	U	
GP-16	GP-16-51	51 ft	1/3/2013	< 0.21	U		< 0.52	U		< 0.52	U		< 0.52	U		< 0.52	U	
GP-16	GP-16-57	57 ft	1/3/2013	< 0.21	U		< 0.52	U		< 0.52	U		< 0.52	U		< 0.52	U	
GP-16	GP-16-57-DUP	57 ft	1/3/2013	< 0.24	U		< 0.59	U		< 0.59	U		< 0.59	U		< 0.59	U	
GP-16	GP-16-77	77 ft	1/3/2013	< 0.19	U		< 0.49	U		< 0.49	U		< 0.49	U		< 0.49	U	
GP-16	GP-16-91	91 ft	1/7/2013	< 0.0019	U		< 0.0048	U		< 0.0048	U		< 0.0048	U		< 0.0048	U	
GP-17	GP-17-15	15 ft	1/7/2013	< 1.1	U	UJ	< 2.7	U	UJ	< 2.7	U	UJ	< 2.7	U	UJ	< 2.7	U	UJ
GP-17	GP-17-15-DUP	15 ft	1/7/2013	< 2.8	U	UJ	< 7	U	UJ	< 7	U	UJ	< 7	U	UJ	< 7	U	UJ
GP-17	GP-17-45	45 ft	1/7/2013	< 1.6	U	UJ	< 4.1	U	UJ	< 4.1	U	UJ	< 4.1	U	UJ	< 4.1	U	UJ
GP-17	GP-17-57	57 ft	1/7/2013	< 2.4	U	UJ	< 5.9	U	UJ	< 5.9	U	UJ	< 5.9	U	UJ	< 5.9	U	UJ
GP-17	GP-17-65	65 ft	1/7/2013	< 0.16	U	UJ	< 0.39	U	UJ	< 0.39	U	UJ	< 0.39	U	UJ	< 0.39	U	UJ
GP-18	GP-18-21	21 ft	1/8/2013	< 0.72	U	UJ	< 1.8	U	UJ	< 1.8	U	UJ	< 1.8	U	UJ	< 1.8	U	UJ
GP-18	GP-18-37	37 ft	1/8/2013	< 2	U	UJ	< 5.1	U	UJ	< 5.1	U	UJ	< 5.1	U	UJ	< 5.1	U	UJ
GP-18	GP-18-53	53 ft	1/8/2013	< 2.7	U	UJ	< 6.7	U	UJ	< 6.7	U	UJ	< 6.7	U	UJ	< 6.7	U	UJ
GP-18	GP-18-63	63 ft	1/8/2013	< 1.1	U	UJ	< 2.6	U	UJ	< 2.6	U	UJ	< 2.6	U	UJ	< 2.6	U	UJ

SEE LAST PAGE OF TABLE FOR NOTES

ATTACHMENT G
GP BORINGS SOIL ANALYTICAL DATA 2012-2013

Location	Sample ID	Depth	Sample Date	1,2,4-Trimethylbenzene (mg/kg)			1,2-Dibromo-3-chloropropane (DBCP) (mg/kg)			1,2-Dibromoethane (mg/kg)			1,2-Dichlorobenzene (mg/kg)			1,2-Dichloroethane (mg/kg)		
				Result	Lab Quals	AECOM Quals	Result	Lab Quals	AECOM Quals	Result	Lab Quals	AECOM Quals	Result	Lab Quals	AECOM Quals	Result	Lab Quals	AECOM Quals
GP-15	GP-15-19	19 ft	12/18/2012	4.28			< 0.0026	U		< 0.0026	U		< 0.5	U		< 0.5	U	
GP-15	GP-15-29	29 ft	12/18/2012	0.00065	J		< 0.0026	U		< 0.0026	U		< 0.0022	U		< 0.0022	U	
GP-15	GP-15-37	37 ft	12/18/2012	7.32	J		< 0.0028	U		< 0.0028	U		< 4.9	U		< 4.9	U	
GP-15	GP-15-37-DUP	37 ft	12/18/2012	8.43			< 0.0028	U		< 0.0028	U		< 0.22	U		< 0.22	U	
GP-15	GP-15-47	47 ft	12/18/2012	2.21	J		< 0.0029	U		< 0.0029	U		< 1.2	U		< 1.2	U	
GP-15	GP-15-55	55 ft	12/18/2012	136			< 0.0029	U		< 0.0029	U		< 2	U		< 2	U	
GP-15	GP-15-74	74 ft	12/21/2012	0.232	J		< 0.0028	U		< 0.0028	U		< 0.23	U		< 0.23	U	
GP-15	GP-15-89	89 ft	12/21/2012	< 0.52	U		< 0.0027	U		< 0.0027	U		< 0.21	U		< 0.21	U	
GP-16	GP-16-23	23 ft	1/3/2013	< 0.0065	U		< 0.0031	U		< 0.0031	U		< 0.0026	U		< 0.0026	U	
GP-16	GP-16-42	42 ft	1/3/2013	0.292	J		< 0.0029	U		< 0.0029	U		< 0.23	U		< 0.23	U	
GP-16	GP-16-51	51 ft	1/3/2013	0.975			< 0.0027	U		< 0.0027	U		< 0.21	U		< 0.21	U	
GP-16	GP-16-57	57 ft	1/3/2013	192			< 0.0028	U		< 0.0028	U		< 0.21	U		11.2		J
GP-16	GP-16-57-DUP	57 ft	1/3/2013	244			< 0.0029	U		< 0.0029	U		< 0.24	U		< 0.24	U	UJ
GP-16	GP-16-77	77 ft	1/3/2013	2.53			< 0.0028	U		< 0.0028	U		< 0.19	U		< 0.19	U	
GP-16	GP-16-91	91 ft	1/7/2013	0.0047	J		< 0.0028	U		< 0.0028	U		< 0.0019	U		< 0.0019	U	
GP-17	GP-17-15	15 ft	1/7/2013	16.3		J	< 0.0027	U		< 0.0027	U		< 1.1	U	UJ	< 1.1	U	UJ
GP-17	GP-17-15-DUP	15 ft	1/7/2013	25		J	< 0.003	U		< 0.003	U		< 2.8	U	UJ	< 2.8	U	UJ
GP-17	GP-17-45	45 ft	1/7/2013	2.67	J	J	< 0.0029	U		< 0.0029	U		< 1.6	U	UJ	< 1.6	U	UJ
GP-17	GP-17-57	57 ft	1/7/2013	1.06	J	J	< 0.0031	U		< 0.0031	U		< 2.4	U	UJ	< 2.4	U	UJ
GP-17	GP-17-65	65 ft	1/7/2013	0.675		J	< 0.0029	U		< 0.0029	U		< 0.16	U	UJ	< 0.16	U	UJ
GP-18	GP-18-21	21 ft	1/8/2013	< 1.8	U	UJ	< 0.0028	U		< 0.0028	U		< 0.72	U	UJ	< 0.72	U	UJ
GP-18	GP-18-37	37 ft	1/8/2013	6.98		J	< 0.0027	U		< 0.0027	U		< 2	U	UJ	< 2	U	UJ
GP-18	GP-18-53	53 ft	1/8/2013	1.75	J	J	< 0.0033	U		< 0.0033	U		< 2.7	U	UJ	< 2.7	U	UJ
GP-18	GP-18-63	63 ft	1/8/2013	2.69		J	< 0.0028	U		< 0.0028	U		< 1.1	U	UJ	< 1.1	U	UJ

SEE LAST PAGE OF TABLE FOR NOTES

ATTACHMENT G
GP BORINGS SOIL ANALYTICAL DATA 2012-2013

Location	Sample ID	Depth	Sample Date	1,2-Dichloropropane (mg/kg)			1,3,5-Trimethylbenzene (mg/kg)			1,3-Dichlorobenzene (mg/kg)			1,3-Dichloropropane (mg/kg)			1,4-Dichlorobenzene (mg/kg)		
				Result	Lab Quals	AECOM Quals	Result	Lab Quals	AECOM Quals	Result	Lab Quals	AECOM Quals	Result	Lab Quals	AECOM Quals	Result	Lab Quals	AECOM Quals
GP-15	GP-15-19	19 ft	12/18/2012	< 0.5	U		2.73			< 0.5	U		< 1.2	U		< 0.5	U	
GP-15	GP-15-29	29 ft	12/18/2012	< 0.0022	U		< 0.0055	U		< 0.0022	U		< 0.0055	U		< 0.0022	U	
GP-15	GP-15-37	37 ft	12/18/2012	< 4.9	U		2.2	J		< 4.9	U		< 12	U		< 4.9	U	
GP-15	GP-15-37-DUP	37 ft	12/18/2012	< 0.22	U		2.59			< 0.22	U		< 0.55	U		< 0.22	U	
GP-15	GP-15-47	47 ft	12/18/2012	< 1.2	U		0.721	J		< 1.2	U		< 3	U		< 1.2	U	
GP-15	GP-15-55	55 ft	12/18/2012	< 2	U		44.3			< 2	U		< 5	U		< 2	U	
GP-15	GP-15-74	74 ft	12/21/2012	< 0.23	U		0.0828	J		< 0.23	U		< 0.57	U		< 0.23	U	
GP-15	GP-15-89	89 ft	12/21/2012	< 0.21	U		< 0.52	U		< 0.21	U		< 0.52	U		< 0.21	U	
GP-16	GP-16-23	23 ft	1/3/2013	< 0.0026	U		< 0.0065	U		< 0.0026	U		< 0.0065	U		< 0.0026	U	
GP-16	GP-16-42	42 ft	1/3/2013	< 0.23	U		< 0.57	U		< 0.23	U		< 0.57	U		< 0.23	U	
GP-16	GP-16-51	51 ft	1/3/2013	< 0.21	U		0.293	J		< 0.21	U		< 0.52	U		< 0.21	U	
GP-16	GP-16-57	57 ft	1/3/2013	< 0.21	U		62			< 0.21	U		< 0.52	U		< 0.21	U	
GP-16	GP-16-57-DUP	57 ft	1/3/2013	< 0.24	U		77.7			< 0.24	U		< 0.59	U		< 0.24	U	
GP-16	GP-16-77	77 ft	1/3/2013	< 0.19	U		0.74			< 0.19	U		< 0.49	U		< 0.19	U	
GP-16	GP-16-91	91 ft	1/7/2013	< 0.0019	U		0.0017	J		< 0.0019	U		< 0.0048	U		< 0.0019	U	
GP-17	GP-17-15	15 ft	1/7/2013	< 1.1	U	UJ	3		J	< 1.1	U	UJ	< 2.7	U	UJ	< 1.1	U	UJ
GP-17	GP-17-15-DUP	15 ft	1/7/2013	< 2.8	U	UJ	4.96	J	J	< 2.8	U	UJ	< 7	U	UJ	< 2.8	U	UJ
GP-17	GP-17-45	45 ft	1/7/2013	< 1.6	U	UJ	0.755	J	J	< 1.6	U	UJ	< 4.1	U	UJ	< 1.6	U	UJ
GP-17	GP-17-57	57 ft	1/7/2013	< 2.4	U	UJ	< 5.9	U	UJ	< 2.4	U	UJ	< 5.9	U	UJ	< 2.4	U	UJ
GP-17	GP-17-65	65 ft	1/7/2013	< 0.16	U	UJ	0.19	J	J	< 0.16	U	UJ	< 0.39	U	UJ	< 0.16	U	UJ
GP-18	GP-18-21	21 ft	1/8/2013	< 0.72	U	UJ	< 1.8	U	UJ	< 0.72	U	UJ	< 1.8	U	UJ	< 0.72	U	UJ
GP-18	GP-18-37	37 ft	1/8/2013	< 2	U	UJ	1.78	J	J	< 2	U	UJ	< 5.1	U	UJ	< 2	U	UJ
GP-18	GP-18-53	53 ft	1/8/2013	< 2.7	U	UJ	0.51	J	J	< 2.7	U	UJ	< 6.7	U	UJ	< 2.7	U	UJ
GP-18	GP-18-63	63 ft	1/8/2013	< 1.1	U	UJ	0.731	J	J	< 1.1	U	UJ	< 2.6	U	UJ	< 1.1	U	UJ

SEE LAST PAGE OF TABLE FOR NOTES

ATTACHMENT G
GP BORINGS SOIL ANALYTICAL DATA 2012-2013

Location	Sample ID	Depth	Sample Date	1,4-Dioxane (mg/kg)			2,2-Dichloropropane (mg/kg)			2-Butanone (mg/kg)			2-Chloroethyl vinyl ether (mg/kg)			2-Chlorotoluene (mg/kg)		
				Result	Lab Quals	AECOM Quals	Result	Lab Quals	AECOM Quals	Result	Lab Quals	AECOM Quals	Result	Lab Quals	AECOM Quals	Result	Lab Quals	AECOM Quals
GP-15	GP-15-19	19 ft	12/18/2012	< 6.2	U		< 1.2	U		< 1.2	U	UJ	< 1.2	U		< 1.2	U	
GP-15	GP-15-29	29 ft	12/18/2012	< 0.028	U		< 0.0055	U		< 0.0055	U		< 0.0055	U		< 0.0055	U	
GP-15	GP-15-37	37 ft	12/18/2012	< 61	U	UJ	< 12	U		< 12	U	UJ	< 12	U		< 12	U	
GP-15	GP-15-37-DUP	37 ft	12/18/2012	< 2.8	U		< 0.55	U		< 0.55	U	UJ	< 0.55	U		< 0.55	U	
GP-15	GP-15-47	47 ft	12/18/2012	< 15	U		< 3	U		< 3	U	UJ	< 3	U		< 3	U	
GP-15	GP-15-55	55 ft	12/18/2012	< 25	U		< 5	U		< 5	U	UJ	< 5	U		< 5	U	
GP-15	GP-15-74	74 ft	12/21/2012	< 2.8	U		< 0.57	U		< 0.57	U	UJ	< 0.57	U		< 0.57	U	
GP-15	GP-15-89	89 ft	12/21/2012	< 2.6	U		< 0.52	U		< 0.52	U	UJ	< 0.52	U		< 0.52	U	
GP-16	GP-16-23	23 ft	1/3/2013	< 0.032	U	UJ	< 0.0065	U		< 0.0065	U		< 0.0065	U		< 0.0065	U	
GP-16	GP-16-42	42 ft	1/3/2013	< 2.9	U		< 0.57	U		< 0.57	U	UJ	< 0.57	U		< 0.57	U	
GP-16	GP-16-51	51 ft	1/3/2013	< 2.6	U		< 0.52	U		< 0.52	U	UJ	< 0.52	U		< 0.52	U	
GP-16	GP-16-57	57 ft	1/3/2013	< 2.6	U		< 0.52	U		< 0.52	U	UJ	< 0.52	U		< 0.52	U	
GP-16	GP-16-57-DUP	57 ft	1/3/2013	< 2.9	U		< 0.59	U		< 0.59	U	UJ	< 0.59	U		< 0.59	U	
GP-16	GP-16-77	77 ft	1/3/2013	< 2.4	U		< 0.49	U		< 0.49	U	UJ	< 0.49	U		< 0.49	U	
GP-16	GP-16-91	91 ft	1/7/2013	< 0.024	U		< 0.0048	U		< 0.0048	U		< 0.0048	U		< 0.0048	U	
GP-17	GP-17-15	15 ft	1/7/2013	< 14	U	UJ	< 2.7	U	UJ	< 2.7	U	UJ	< 2.7	U	UJ	< 2.7	U	UJ
GP-17	GP-17-15-DUP	15 ft	1/7/2013	< 35	U	UJ	< 7	U	UJ	< 7	U	UJ	< 7	U	UJ	< 7	U	UJ
GP-17	GP-17-45	45 ft	1/7/2013	< 21	U	UJ	< 4.1	U	UJ	< 4.1	U	UJ	< 4.1	U	UJ	< 4.1	U	UJ
GP-17	GP-17-57	57 ft	1/7/2013	< 30	U	UJ	< 5.9	U	UJ	< 5.9	U	UJ	< 5.9	U	UJ	< 5.9	U	UJ
GP-17	GP-17-65	65 ft	1/7/2013	< 2	U	UJ	< 0.39	U	UJ	< 0.39	U	UJ	< 0.39	U	UJ	< 0.39	U	UJ
GP-18	GP-18-21	21 ft	1/8/2013	< 9	U	UJ	< 1.8	U	UJ	< 1.8	U	UJ	< 1.8	U	UJ	< 1.8	U	UJ
GP-18	GP-18-37	37 ft	1/8/2013	< 25	U	UJ	< 5.1	U	UJ	< 5.1	U	UJ	< 5.1	U	UJ	< 5.1	U	UJ
GP-18	GP-18-53	53 ft	1/8/2013	< 34	U	UJ	< 6.7	U	UJ	< 6.7	U	UJ	< 6.7	U	UJ	< 6.7	U	UJ
GP-18	GP-18-63	63 ft	1/8/2013	< 13	U	UJ	< 2.6	U	UJ	< 2.6	U	UJ	< 2.6	U	UJ	< 2.6	U	UJ

ATTACHMENT G
GP BORINGS SOIL ANALYTICAL DATA 2012-2013

Location	Sample ID	Depth	Sample Date	2-Hexanone (Methyl N-Butyl Ketone) (mg/kg)			4-Chlorotoluene (mg/kg)			4-Methyl-2-pentanone (Methyl Isobutyl Ketone) (mg/kg)			Acetone (mg/kg)			Acrolein (mg/kg)		
				Result	Lab Quals	AECOM Quals	Result	Lab Quals	AECOM Quals	Result	Lab Quals	AECOM Quals	Result	Lab Quals	AECOM Quals	Result	Lab Quals	AECOM Quals
GP-15	GP-15-19	19 ft	12/18/2012	< 1.2	U		< 1.2	U		< 1.2	U		< 1.2	U	UJ	< 6.2	U	UJ
GP-15	GP-15-29	29 ft	12/18/2012	< 0.0055	U		< 0.0055	U		< 0.0055	U		< 0.0055	U	UJ	< 0.028	U	
GP-15	GP-15-37	37 ft	12/18/2012	< 12	U	UJ	< 12	U		< 12	U		< 12	U	UJ	< 61	U	UJ
GP-15	GP-15-37-DUP	37 ft	12/18/2012	9.73			< 0.55	U		< 0.55	U		< 0.55	U	UJ	< 110	U	UJ
GP-15	GP-15-47	47 ft	12/18/2012	< 3	U		< 3	U		< 3	U		< 3	U	UJ	< 30	U	UJ
GP-15	GP-15-55	55 ft	12/18/2012	< 5	U		< 5	U		< 5	U		< 5	U	UJ	< 25	U	UJ
GP-15	GP-15-74	74 ft	12/21/2012	< 0.57	U	UJ	< 0.57	U		< 0.57	U		< 0.57	U	UJ	< 2.8	U	UJ
GP-15	GP-15-89	89 ft	12/21/2012	< 0.52	U	UJ	< 0.52	U		< 0.52	U		< 0.52	U	UJ	< 2.6	U	UJ
GP-16	GP-16-23	23 ft	1/3/2013	< 0.0065	U		< 0.0065	U		< 0.0065	U		< 0.0065	U		< 0.032	U	
GP-16	GP-16-42	42 ft	1/3/2013	< 0.57	U	UJ	< 0.57	U		< 0.57	U		< 0.57	U	UJ	< 2.9	U	UJ
GP-16	GP-16-51	51 ft	1/3/2013	< 0.52	U	UJ	< 0.52	U		< 0.52	U		< 0.49	J	UJ	< 2.6	U	UJ
GP-16	GP-16-57	57 ft	1/3/2013	< 0.52	U	UJ	< 0.52	U		< 0.52	U		< 0.52	U	UJ	< 2.6	U	UJ
GP-16	GP-16-57-DUP	57 ft	1/3/2013	19.1		J	< 0.59	U		< 0.59	U		< 0.59	U	UJ	< 2.9	U	UJ
GP-16	GP-16-77	77 ft	1/3/2013	< 0.49	U	UJ	< 0.49	U		< 0.49	U		< 0.544		UJ	< 2.4	U	UJ
GP-16	GP-16-91	91 ft	1/7/2013	< 0.0048	U		< 0.0048	U		< 0.0048	U		< 0.0048	U		< 0.024	U	
GP-17	GP-17-15	15 ft	1/7/2013	< 2.7	U	UJ	< 2.7	U	UJ	< 2.7	U	UJ	< 2.7	U	UJ	< 14	U	UJ
GP-17	GP-17-15-DUP	15 ft	1/7/2013	< 7	U	UJ	< 7	U	UJ	< 7	U	UJ	< 7	U	UJ	< 35	U	UJ
GP-17	GP-17-45	45 ft	1/7/2013	< 4.1	U	UJ	< 4.1	U	UJ	< 4.1	U	UJ	< 4.1	U	UJ	< 21	U	UJ
GP-17	GP-17-57	57 ft	1/7/2013	< 5.9	U	UJ	< 5.9	U	UJ	< 5.9	U	UJ	< 5.9	U	UJ	< 30	U	UJ
GP-17	GP-17-65	65 ft	1/7/2013	< 0.39	U	UJ	< 0.39	U	UJ	< 0.39	U	UJ	< 0.39	U	UJ	< 2	U	UJ
GP-18	GP-18-21	21 ft	1/8/2013	< 1.8	U	UJ	< 1.8	U	UJ	< 1.8	U	UJ	< 1.8	U	UJ	< 9	U	UJ
GP-18	GP-18-37	37 ft	1/8/2013	< 5.1	U	UJ	< 5.1	U	UJ	< 5.1	U	UJ	< 5.1	U	UJ	< 25	U	UJ
GP-18	GP-18-53	53 ft	1/8/2013	< 6.7	U	UJ	< 6.7	U	UJ	< 6.7	U	UJ	< 6.7	U	UJ	< 34	U	UJ
GP-18	GP-18-63	63 ft	1/8/2013	< 2.6	U	UJ	< 2.6	U	UJ	< 2.6	U	UJ	< 2.6	U	UJ	< 13	U	UJ

SEE LAST PAGE OF TABLE FOR NOTES

ATTACHMENT G
GP BORINGS SOIL ANALYTICAL DATA 2012-2013

Location	Sample ID	Depth	Sample Date	Acrylonitrile (mg/kg)			Benzene (mg/kg)			Bromobenzene (mg/kg)			Bromochloromethane (mg/kg)			Bromodichloromethane (mg/kg)		
				Result	Lab Quals	AECOM Quals	Result	Lab Quals	AECOM Quals	Result	Lab Quals	AECOM Quals	Result	Lab Quals	AECOM Quals	Result	Lab Quals	AECOM Quals
GP-15	GP-15-19	19 ft	12/18/2012	< 6.2	U		63.7			< 1.2	U		< 1.2	U		< 0.5	U	
GP-15	GP-15-29	29 ft	12/18/2012	< 0.028	U		0.126			< 0.0055	U		< 0.0055	U		< 0.0022	U	
GP-15	GP-15-37	37 ft	12/18/2012	< 61	U		974			< 12	U		< 12	U		< 4.9	U	
GP-15	GP-15-37-DUP	37 ft	12/18/2012	< 2.8	U		1150			< 0.55	U		< 0.55	U		< 0.22	U	
GP-15	GP-15-47	47 ft	12/18/2012	< 15	U		283			< 3	U		< 3	U		< 1.2	U	
GP-15	GP-15-55	55 ft	12/18/2012	< 25	U		184			< 5	U		< 5	U		< 2	U	
GP-15	GP-15-74	74 ft	12/21/2012	< 2.8	U		3.97			< 0.57	U		< 0.57	U		< 0.23	U	
GP-15	GP-15-89	89 ft	12/21/2012	< 2.6	U		0.483			< 0.52	U		< 0.52	U		< 0.21	U	
GP-16	GP-16-23	23 ft	1/3/2013	< 0.032	U		0.0458			< 0.0065	U		< 0.0065	U		< 0.0026	U	
GP-16	GP-16-42	42 ft	1/3/2013	< 2.9	U		476			< 0.57	U		< 0.57	U		< 0.23	U	
GP-16	GP-16-51	51 ft	1/3/2013	< 2.6	U		25			< 0.52	U		< 0.52	U		< 0.21	U	
GP-16	GP-16-57	57 ft	1/3/2013	24.5			431			< 0.52	U		< 0.52	U		< 0.21	U	
GP-16	GP-16-57-DUP	57 ft	1/3/2013	27.6			473			< 0.59	U		< 0.59	U		< 0.24	U	
GP-16	GP-16-77	77 ft	1/3/2013	< 2.4	U		2.18			< 0.49	U		< 0.49	U		< 0.19	U	
GP-16	GP-16-91	91 ft	1/7/2013	< 0.024	U		0.0488			< 0.0048	U		< 0.0048	U		< 0.0019	U	
GP-17	GP-17-15	15 ft	1/7/2013	< 14	U	UJ	154		J	< 2.7	U	UJ	< 2.7	U	UJ	< 1.1	U	UJ
GP-17	GP-17-15-DUP	15 ft	1/7/2013	< 35	U	UJ	391		J	< 7	U	UJ	< 7	U	UJ	< 2.8	U	UJ
GP-17	GP-17-45	45 ft	1/7/2013	< 21	U	UJ	1550			< 4.1	U	UJ	< 4.1	U	UJ	< 1.6	U	UJ
GP-17	GP-17-57	57 ft	1/7/2013	< 30	U	UJ	178		J	< 5.9	U	UJ	< 5.9	U	UJ	< 2.4	U	UJ
GP-17	GP-17-65	65 ft	1/7/2013	< 2	U	UJ	15.4		J	< 0.39	U	UJ	< 0.39	U	UJ	< 0.16	U	UJ
GP-18	GP-18-21	21 ft	1/8/2013	< 9	U	UJ	9.94		J	< 1.8	U	UJ	< 1.8	U	UJ	< 0.72	U	UJ
GP-18	GP-18-37	37 ft	1/8/2013	< 25	U	UJ	453			< 5.1	U	UJ	< 5.1	U	UJ	< 2	U	UJ
GP-18	GP-18-53	53 ft	1/8/2013	< 34	U	UJ	668			< 6.7	U	UJ	< 6.7	U	UJ	< 2.7	U	UJ
GP-18	GP-18-63	63 ft	1/8/2013	< 13	U	UJ	67.8		J	< 2.6	U	UJ	< 2.6	U	UJ	< 1.1	U	UJ

SEE LAST PAGE OF TABLE FOR NOTES

ATTACHMENT G
GP BORINGS SOIL ANALYTICAL DATA 2012-2013

Location	Sample ID	Depth	Sample Date	Bromoform (mg/kg)			Bromomethane (mg/kg)			Carbon disulfide (mg/kg)			Carbon tetrachloride (mg/kg)			Chlorobenzene (mg/kg)		
				Result	Lab Quals	AECOM Quals	Result	Lab Quals	AECOM Quals	Result	Lab Quals	AECOM Quals	Result	Lab Quals	AECOM Quals	Result	Lab Quals	AECOM Quals
GP-15	GP-15-19	19 ft	12/18/2012	< 0.5	U		< 0.5	U		< 1.2	U		< 0.5	U		< 0.5	U	
GP-15	GP-15-29	29 ft	12/18/2012	< 0.0022	U		< 0.0022	U		< 0.0055	U		< 0.0022	U		< 0.0022	U	
GP-15	GP-15-37	37 ft	12/18/2012	< 4.9	U		< 4.9	U		< 12	U		< 4.9	U		< 4.9	U	
GP-15	GP-15-37-DUP	37 ft	12/18/2012	< 0.22	U		< 0.22	U		< 0.55	U		< 0.22	U		< 0.22	U	
GP-15	GP-15-47	47 ft	12/18/2012	< 1.2	U		< 1.2	U		< 3	U		< 1.2	U		< 1.2	U	
GP-15	GP-15-55	55 ft	12/18/2012	< 2	U		< 2	U		< 5	U		< 2	U		< 2	U	
GP-15	GP-15-74	74 ft	12/21/2012	< 0.23	U		< 0.23	U		< 0.57	U		< 0.23	U		< 0.23	U	
GP-15	GP-15-89	89 ft	12/21/2012	< 0.21	U		< 0.21	U		< 0.52	U		< 0.21	U		< 0.21	U	
GP-16	GP-16-23	23 ft	1/3/2013	< 0.0026	U		< 0.0026	U		< 0.0065	U		< 0.0026	U		< 0.0026	U	
GP-16	GP-16-42	42 ft	1/3/2013	< 0.23	U		< 0.23	U		< 0.57	U		< 0.23	U		< 0.23	U	
GP-16	GP-16-51	51 ft	1/3/2013	< 0.21	U		< 0.21	U		< 0.52	U		< 0.21	U		< 0.21	U	
GP-16	GP-16-57	57 ft	1/3/2013	< 0.21	U		< 0.21	U		< 0.52	U		< 0.21	U		< 0.21	U	
GP-16	GP-16-57-DUP	57 ft	1/3/2013	< 0.24	U		< 0.24	U		< 0.59	U		< 0.24	U		< 0.24	U	
GP-16	GP-16-77	77 ft	1/3/2013	< 0.19	U		< 0.19	U		< 0.49	U		< 0.19	U		< 0.19	U	
GP-16	GP-16-91	91 ft	1/7/2013	< 0.0019	U		< 0.0019	U		0.00095	J	J	< 0.0019	U		< 0.0019	U	
GP-17	GP-17-15	15 ft	1/7/2013	< 1.1	U	UJ	< 1.1	U	UJ	< 2.7	U	UJ	< 1.1	U	UJ	< 1.1	U	UJ
GP-17	GP-17-15-DUP	15 ft	1/7/2013	< 2.8	U	UJ	< 2.8	U	UJ	< 7	U	UJ	< 2.8	U	UJ	< 2.8	U	UJ
GP-17	GP-17-45	45 ft	1/7/2013	< 1.6	U	UJ	< 1.6	U	UJ	< 4.1	U	UJ	< 1.6	U	UJ	< 1.6	U	UJ
GP-17	GP-17-57	57 ft	1/7/2013	< 2.4	U	UJ	< 2.4	U	UJ	< 5.9	U	UJ	< 2.4	U	UJ	< 2.4	U	UJ
GP-17	GP-17-65	65 ft	1/7/2013	< 0.16	U	UJ	< 0.16	U	UJ	< 0.39	U	UJ	< 0.16	U	UJ	< 0.16	U	UJ
GP-18	GP-18-21	21 ft	1/8/2013	< 0.72	U	UJ	< 0.72	U	UJ	< 1.8	U	UJ	< 0.72	U	UJ	< 0.72	U	UJ
GP-18	GP-18-37	37 ft	1/8/2013	< 2	U	UJ	< 2	U	UJ	< 5.1	U	UJ	< 2	U	UJ	< 2	U	UJ
GP-18	GP-18-53	53 ft	1/8/2013	< 2.7	U	UJ	< 2.7	U	UJ	< 6.7	U	UJ	< 2.7	U	UJ	< 2.7	U	UJ
GP-18	GP-18-63	63 ft	1/8/2013	< 1.1	U	UJ	< 1.1	U	UJ	< 2.6	U	UJ	< 1.1	U	UJ	< 1.1	U	UJ

SEE LAST PAGE OF TABLE FOR NOTES

ATTACHMENT G
GP BORINGS SOIL ANALYTICAL DATA 2012-2013

Location	Sample ID	Depth	Sample Date	Chlorodibromomethane (mg/kg)			Chloroethane (mg/kg)			Chloroform (mg/kg)			Chloromethane (mg/kg)			cis-1,2-Dichloroethene (mg/kg)		
				Result	Lab Quals	AECOM Quals	Result	Lab Quals	AECOM Quals	Result	Lab Quals	AECOM Quals	Result	Lab Quals	AECOM Quals	Result	Lab Quals	AECOM Quals
GP-15	GP-15-19	19 ft	12/18/2012	< 0.5	U		< 1.2	U		< 0.5	U		< 1.2	U		< 0.5	U	
GP-15	GP-15-29	29 ft	12/18/2012	< 0.0022	U		< 0.0055	U		< 0.0022	U		< 0.0055	U		< 0.0022	U	
GP-15	GP-15-37	37 ft	12/18/2012	< 4.9	U		< 12	U		< 4.9	U		< 12	U		< 4.9	U	
GP-15	GP-15-37-DUP	37 ft	12/18/2012	< 0.22	U		< 0.55	U		< 0.22	U		< 0.55	U		< 0.22	U	
GP-15	GP-15-47	47 ft	12/18/2012	< 1.2	U		< 3	U		< 1.2	U		< 3	U		< 1.2	U	
GP-15	GP-15-55	55 ft	12/18/2012	< 2	U		< 5	U		< 2	U		< 5	U		< 2	U	
GP-15	GP-15-74	74 ft	12/21/2012	< 0.23	U		< 0.57	U		< 0.23	U		< 0.57	U		< 0.23	U	
GP-15	GP-15-89	89 ft	12/21/2012	< 0.21	U		< 0.52	U		< 0.21	U		< 0.52	U		< 0.21	U	
GP-16	GP-16-23	23 ft	1/3/2013	< 0.0026	U		< 0.0065	U		< 0.0026	U		< 0.0065	U		< 0.0026	U	
GP-16	GP-16-42	42 ft	1/3/2013	< 0.23	U		< 0.57	U		< 0.23	U		< 0.57	U		< 0.23	U	
GP-16	GP-16-51	51 ft	1/3/2013	< 0.21	U		< 0.52	U		< 0.21	U		< 0.52	U		< 0.21	U	
GP-16	GP-16-57	57 ft	1/3/2013	< 0.21	U		< 0.52	U		< 0.21	U		< 0.52	U		< 0.21	U	
GP-16	GP-16-57-DUP	57 ft	1/3/2013	< 0.24	U		< 0.59	U		< 0.24	U		< 0.59	U		< 0.24	U	
GP-16	GP-16-77	77 ft	1/3/2013	< 0.19	U		< 0.49	U		< 0.19	U		< 0.49	U		< 0.19	U	
GP-16	GP-16-91	91 ft	1/7/2013	< 0.0019	U		< 0.0048	U		0.00075	J		< 0.0048	U		< 0.0019	U	
GP-17	GP-17-15	15 ft	1/7/2013	< 1.1	U	UJ	< 2.7	U	UJ	< 1.1	U	UJ	< 2.7	U	UJ	< 1.1	U	UJ
GP-17	GP-17-15-DUP	15 ft	1/7/2013	< 2.8	U	UJ	< 7	U	UJ	< 2.8	U	UJ	< 7	U	UJ	< 2.8	U	UJ
GP-17	GP-17-45	45 ft	1/7/2013	< 1.6	U	UJ	< 4.1	U	UJ	< 1.6	U	UJ	< 4.1	U	UJ	< 1.6	U	UJ
GP-17	GP-17-57	57 ft	1/7/2013	< 2.4	U	UJ	< 5.9	U	UJ	< 2.4	U	UJ	< 5.9	U	UJ	< 2.4	U	UJ
GP-17	GP-17-65	65 ft	1/7/2013	< 0.16	U	UJ	< 0.39	U	UJ	< 0.16	U	UJ	< 0.39	U	UJ	< 0.16	U	UJ
GP-18	GP-18-21	21 ft	1/8/2013	< 0.72	U	UJ	< 1.8	U	UJ	< 0.72	U	UJ	< 1.8	U	UJ	< 0.72	U	UJ
GP-18	GP-18-37	37 ft	1/8/2013	< 2	U	UJ	< 5.1	U	UJ	< 2	U	UJ	< 5.1	U	UJ	< 2	U	UJ
GP-18	GP-18-53	53 ft	1/8/2013	< 2.7	U	UJ	< 6.7	U	UJ	< 2.7	U	UJ	< 6.7	U	UJ	< 2.7	U	UJ
GP-18	GP-18-63	63 ft	1/8/2013	< 1.1	U	UJ	< 2.6	U	UJ	< 1.1	U	UJ	< 2.6	U	UJ	< 1.1	U	UJ

SEE LAST PAGE OF TABLE FOR NOTES

ATTACHMENT G
GP BORINGS SOIL ANALYTICAL DATA 2012-2013

Location	Sample ID	Depth	Sample Date	cis-1,3-Dichloropropene (mg/kg)			Cymene (p-Isopropyltoluene) (mg/kg)			Dibromomethane (mg/kg)			Dichlorodifluoromethane (mg/kg)			Dichloromethane (Methylene chloride) (mg/kg)		
				Result	Lab Quals	AECOM Quals	Result	Lab Quals	AECOM Quals	Result	Lab Quals	AECOM Quals	Result	Lab Quals	AECOM Quals	Result	Lab Quals	AECOM Quals
GP-15	GP-15-19	19 ft	12/18/2012	< 0.5	U		1.79			< 1.2	U		< 0.5	U		< 0.5	U	
GP-15	GP-15-29	29 ft	12/18/2012	< 0.0022	U		< 0.0055	U		< 0.0055	U		< 0.0022	U		< 0.0022	U	
GP-15	GP-15-37	37 ft	12/18/2012	< 4.9	U		< 12	U		< 12	U		< 4.9	U		< 4.9	U	
GP-15	GP-15-37-DUP	37 ft	12/18/2012	< 0.22	U		0.154	J		< 0.55	U		< 0.22	U		< 0.22	U	
GP-15	GP-15-47	47 ft	12/18/2012	< 1.2	U		0.301	J		< 3	U		< 1.2	U		< 1.2	U	
GP-15	GP-15-55	55 ft	12/18/2012	< 2	U		2.31	J		< 5	U		< 2	U		< 2	U	
GP-15	GP-15-74	74 ft	12/21/2012	< 0.23	U		< 0.57	U		< 0.57	U		< 0.23	U		< 0.23	U	
GP-15	GP-15-89	89 ft	12/21/2012	< 0.21	U		< 0.52	U		< 0.52	U		< 0.21	U		< 0.21	U	
GP-16	GP-16-23	23 ft	1/3/2013	< 0.0026	U		< 0.0065	U		< 0.0065	U		< 0.0026	U		< 0.0026	U	
GP-16	GP-16-42	42 ft	1/3/2013	< 0.23	U		< 0.57	U		< 0.57	U		< 0.23	U		< 0.23	U	
GP-16	GP-16-51	51 ft	1/3/2013	< 0.21	U		< 0.52	U		< 0.52	U		< 0.21	U		< 0.21	U	
GP-16	GP-16-57	57 ft	1/3/2013	< 0.21	U		3.09			< 0.52	U		< 0.21	U		< 0.21	U	
GP-16	GP-16-57-DUP	57 ft	1/3/2013	< 0.24	U		3.7			< 0.59	U		< 0.24	U		< 0.24	U	
GP-16	GP-16-77	77 ft	1/3/2013	< 0.19	U		0.0518	J		< 0.49	U		< 0.19	U		< 0.19	U	
GP-16	GP-16-91	91 ft	1/7/2013	< 0.0019	U		< 0.0048	U		< 0.0048	U		< 0.0019	U		< 0.0011	JB	U
GP-17	GP-17-15	15 ft	1/7/2013	< 1.1	U	UJ	0.415	J	J	< 2.7	U	UJ	< 1.1	U	UJ	< 1.1	U	
GP-17	GP-17-15-DUP	15 ft	1/7/2013	< 2.8	U	UJ	< 7	U	UJ	< 7	U	UJ	< 2.8	U	UJ	< 2.8	U	
GP-17	GP-17-45	45 ft	1/7/2013	< 1.6	U	UJ	< 4.1	U	UJ	< 4.1	U	UJ	< 1.6	U	UJ	< 1.6	U	
GP-17	GP-17-57	57 ft	1/7/2013	< 2.4	U	UJ	< 5.9	U	UJ	< 5.9	U	UJ	< 2.4	U	UJ	< 2.4	U	
GP-17	GP-17-65	65 ft	1/7/2013	< 0.16	U	UJ	< 0.39	U	UJ	< 0.39	U	UJ	< 0.16	U	UJ	< 0.16	U	
GP-18	GP-18-21	21 ft	1/8/2013	< 0.72	U	UJ	< 1.8	U	UJ	< 1.8	U	UJ	< 0.72	U	UJ	< 0.72	U	
GP-18	GP-18-37	37 ft	1/8/2013	< 2	U	UJ	< 5.1	U	UJ	< 5.1	U	UJ	< 2	U	UJ	< 2	U	
GP-18	GP-18-53	53 ft	1/8/2013	< 2.7	U	UJ	< 6.7	U	UJ	< 6.7	U	UJ	< 2.7	U	UJ	< 2.7	U	
GP-18	GP-18-63	63 ft	1/8/2013	< 1.1	U	UJ	< 2.6	U	UJ	< 2.6	U	UJ	< 1.1	U	UJ	< 1.1	U	

SEE LAST PAGE OF TABLE FOR NOTES

ATTACHMENT G
GP BORINGS SOIL ANALYTICAL DATA 2012-2013

Location	Sample ID	Depth	Sample Date	Ethyl methacrylate (mg/kg)			Ethylbenzene (mg/kg)			Hexachlorobutadiene (mg/kg)			Isopropylbenzene (Cumene) (mg/kg)			m,p-Xylenes (mg/kg)		
				Result	Lab Quals	AECOM Quals	Result	Lab Quals	AECOM Quals	Result	Lab Quals	AECOM Quals	Result	Lab Quals	AECOM Quals	Result	Lab Quals	AECOM Quals
GP-15	GP-15-19	19 ft	12/18/2012	< 1.2	U		0.669			< 1.2	U		1.13	J		1.36		
GP-15	GP-15-29	29 ft	12/18/2012	< 0.0055	U		0.00064	J		< 0.0055	U		< 0.0055	U		0.0012	J	
GP-15	GP-15-37	37 ft	12/18/2012	< 12	U		4.56	J		< 12	U		< 12	U		12.3		
GP-15	GP-15-37-DUP	37 ft	12/18/2012	< 0.55	U		5.28			< 0.55	U		0.438	J		15.7		
GP-15	GP-15-47	47 ft	12/18/2012	< 3	U		1.71			< 3	U		< 3	U		4.81		
GP-15	GP-15-55	55 ft	12/18/2012	< 5	U		111			< 5	U		6.99			290		
GP-15	GP-15-74	74 ft	12/21/2012	< 0.57	U		0.151	J		< 0.57	U		< 0.57	U		0.403		
GP-15	GP-15-89	89 ft	12/21/2012	< 0.52	U		< 0.21	U		< 0.52	U		< 0.52	U		< 0.21	U	
GP-16	GP-16-23	23 ft	1/3/2013	< 0.0065	U		0.0022	J		< 0.0065	U		< 0.0065	U		< 0.0026	U	
GP-16	GP-16-42	42 ft	1/3/2013	< 0.57	U		0.177	J		< 0.57	U		< 0.57	U		0.509		
GP-16	GP-16-51	51 ft	1/3/2013	< 0.52	U		0.298			< 0.52	U		0.0508	J		0.706		
GP-16	GP-16-57	57 ft	1/3/2013	< 0.52	U		33.1		J	< 0.52	U		10.4		J	62.1		J
GP-16	GP-16-57-DUP	57 ft	1/3/2013	< 0.59	U		21.5		J	< 0.59	U		12.7		J	40		J
GP-16	GP-16-77	77 ft	1/3/2013	< 0.49	U		0.814			< 0.49	U		0.128	J		1.72		
GP-16	GP-16-91	91 ft	1/7/2013	< 0.0048	U		0.0045			< 0.0048	U		0.00039	J		0.0099		
GP-17	GP-17-15	15 ft	1/7/2013	< 2.7	U	UJ	1.69		J	< 2.7	U	UJ	0.269	J	J	4.44		J
GP-17	GP-17-15-DUP	15 ft	1/7/2013	< 7	U	UJ	3.04		J	< 7	U	UJ	< 7	U	UJ	7.57		J
GP-17	GP-17-45	45 ft	1/7/2013	< 4.1	U	UJ	1.45	J	J	< 4.1	U	UJ	< 4.1	U	UJ	2.73		J
GP-17	GP-17-57	57 ft	1/7/2013	< 5.9	U	UJ	0.569	J	J	< 5.9	U	UJ	< 5.9	U	UJ	< 2.4	U	UJ
GP-17	GP-17-65	65 ft	1/7/2013	< 0.39	U	UJ	0.41		J	< 0.39	U	UJ	0.0402	J	J	0.934		J
GP-18	GP-18-21	21 ft	1/8/2013	< 1.8	U	UJ	< 0.72	U	UJ	< 1.8	U	UJ	< 1.8	U	UJ	< 0.72	U	UJ
GP-18	GP-18-37	37 ft	1/8/2013	< 5.1	U	UJ	1.13	J	J	< 5.1	U	UJ	0.368	J	J	2.52		J
GP-18	GP-18-53	53 ft	1/8/2013	< 6.7	U	UJ	< 2.7	U	UJ	< 6.7	U	UJ	< 6.7	U	UJ	< 2.7	U	UJ
GP-18	GP-18-63	63 ft	1/8/2013	< 2.6	U	UJ	0.243	J	J	< 2.6	U	UJ	0.296	J	J	1.41		J

SEE LAST PAGE OF TABLE FOR NOTES

ATTACHMENT G
GP BORINGS SOIL ANALYTICAL DATA 2012-2013

Location	Sample ID	Depth	Sample Date	Methyl tert-Butyl Ether (MTBE) (mg/kg)			Naphthalene (mg/kg)			n-Butylbenzene (mg/kg)			n-Propylbenzene (mg/kg)			o-Xylenes (mg/kg)		
				Result	Lab Quals	AECOM Quals	Result	Lab Quals	AECOM Quals	Result	Lab Quals	AECOM Quals	Result	Lab Quals	AECOM Quals	Result	Lab Quals	AECOM Quals
GP-15	GP-15-19	19 ft	12/18/2012	< 0.5	U		0.823	J		1.58			0.548	J		0.294	J	
GP-15	GP-15-29	29 ft	12/18/2012	< 0.0022	U		< 0.0055	U		< 0.0055	U		< 0.0055	U		0.00039	J	
GP-15	GP-15-37	37 ft	12/18/2012	< 4.9	U		< 12	U		1.12	J		< 12	U		4.6	J	
GP-15	GP-15-37-DUP	37 ft	12/18/2012	0.653			1.25			0.864			1.73			6.08		
GP-15	GP-15-47	47 ft	12/18/2012	< 1.2	U		< 3	U		0.347	J		< 3	U		1.62		
GP-15	GP-15-55	55 ft	12/18/2012	< 2	U		19.3			13.9			28.3			63		
GP-15	GP-15-74	74 ft	12/21/2012	< 0.23	U		< 0.57	U		0.0387	J		< 0.57	U		0.0966	J	
GP-15	GP-15-89	89 ft	12/21/2012	< 0.21	U		< 0.52	U		< 0.52	U		< 0.52	U		< 0.21	U	
GP-16	GP-16-23	23 ft	1/3/2013	< 0.0026	U		< 0.0065	U		< 0.0065	U		< 0.0065	U		< 0.0026	U	
GP-16	GP-16-42	42 ft	1/3/2013	< 0.23	U		< 0.57	U		< 0.57	U		< 0.57	U		0.226	J	
GP-16	GP-16-51	51 ft	1/3/2013	< 0.21	U		0.23	J		0.141	J		0.214	J		0.189	J	
GP-16	GP-16-57	57 ft	1/3/2013	< 0.21	U		19.9			27.9			41.2			11.4		J
GP-16	GP-16-57-DUP	57 ft	1/3/2013	< 0.24	U		24.8			32.8			58.8			7.63		J
GP-16	GP-16-77	77 ft	1/3/2013	< 0.19	U		0.938			0.4	J		0.506			0.297		
GP-16	GP-16-91	91 ft	1/7/2013	< 0.0019	U		< 0.0048	U		< 0.0048	U		0.0013	J		0.0029		
GP-17	GP-17-15	15 ft	1/7/2013	< 1.1	U	UJ	45.3		J	3.01		J	1.74	J	J	2.84		J
GP-17	GP-17-15-DUP	15 ft	1/7/2013	< 2.8	U	UJ	64.5		J	4.67	J	J	2.69	J	J	4.76		J
GP-17	GP-17-45	45 ft	1/7/2013	< 1.6	U	UJ	< 4.1	U	UJ	< 4.1	U	UJ	< 4.1	U	UJ	0.945	J	J
GP-17	GP-17-57	57 ft	1/7/2013	< 2.4	U	UJ	< 5.9	U	UJ	< 5.9	U	UJ	< 5.9	U	UJ	< 2.4	U	UJ
GP-17	GP-17-65	65 ft	1/7/2013	< 0.16	U	UJ	< 0.39	U	UJ	0.0559	J	J	0.173	J	J	0.23		J
GP-18	GP-18-21	21 ft	1/8/2013	< 0.72	U	UJ	< 1.8	U	UJ	< 1.8	U	UJ	< 1.8	U	UJ	< 0.72	U	UJ
GP-18	GP-18-37	37 ft	1/8/2013	< 2	U	UJ	< 5.1	U	UJ	< 5.1	U	UJ	< 5.1	U	UJ	0.798	J	J
GP-18	GP-18-53	53 ft	1/8/2013	< 2.7	U	UJ	< 6.7	U	UJ	< 6.7	U	UJ	< 6.7	U	UJ	< 2.7	U	UJ
GP-18	GP-18-63	63 ft	1/8/2013	< 1.1	U	UJ	< 2.6	U	UJ	< 2.6	U	UJ	0.785	J	J	< 1.1	U	UJ

SEE LAST PAGE OF TABLE FOR NOTES

ATTACHMENT G
GP BORINGS SOIL ANALYTICAL DATA 2012-2013

Location	Sample ID	Depth	Sample Date	sec-Butylbenzene (mg/kg)			Styrene (mg/kg)			tert-Butylbenzene (mg/kg)			Tetrachloroethene (mg/kg)			Toluene (mg/kg)		
				Result	Lab Quals	AECOM Quals	Result	Lab Quals	AECOM Quals	Result	Lab Quals	AECOM Quals	Result	Lab Quals	AECOM Quals	Result	Lab Quals	AECOM Quals
GP-15	GP-15-19	19 ft	12/18/2012	1.41			< 1.2	U		< 1.2	U		< 0.5	U		0.283	J	
GP-15	GP-15-29	29 ft	12/18/2012	< 0.0055	U		< 0.0055	U		< 0.0055	U		< 0.0022	U		0.00099	J	
GP-15	GP-15-37	37 ft	12/18/2012	< 12	U		< 12	U		< 12	U		< 4.9	U		5.53	J	
GP-15	GP-15-37-DUP	37 ft	12/18/2012	0.228	J		< 0.55	U		< 0.55	U		< 0.22	U		6.76		
GP-15	GP-15-47	47 ft	12/18/2012	1.86	J		< 3	U		< 3	U		< 1.2	U		1.69	J	
GP-15	GP-15-55	55 ft	12/18/2012	3.12	J		< 5	U		2.29	J		< 2	U		12.5		
GP-15	GP-15-74	74 ft	12/21/2012	< 0.57	U		< 0.57	U		< 0.57	U		< 0.23	U		< 0.57	U	
GP-15	GP-15-89	89 ft	12/21/2012	< 0.52	U		< 0.52	U		< 0.52	U		< 0.21	U		< 0.52	U	
GP-16	GP-16-23	23 ft	1/3/2013	< 0.0065	U		< 0.0065	U		< 0.0065	U		< 0.0026	U		0.0028	J	
GP-16	GP-16-42	42 ft	1/3/2013	< 0.57	U		< 0.57	U		< 0.57	U		< 0.23	U		0.999		
GP-16	GP-16-51	51 ft	1/3/2013	0.0308	J		< 0.52	U		< 0.52	U		< 0.21	U		0.141	J	
GP-16	GP-16-57	57 ft	1/3/2013	4.96			< 0.52	U		1.69			< 0.21	U		76.8		
GP-16	GP-16-57-DUP	57 ft	1/3/2013	5.87			< 0.59	U		2.25			< 0.24	U		94.3		
GP-16	GP-16-77	77 ft	1/3/2013	0.0725	J		< 0.49	U		< 0.49	U		< 0.19	U		0.608		
GP-16	GP-16-91	91 ft	1/7/2013	< 0.0048	U		< 0.0048	U		< 0.0048	U		< 0.0019	U		0.004	J	
GP-17	GP-17-15	15 ft	1/7/2013	0.323	J	J	< 2.7	U	UJ	< 2.7	U	UJ	< 1.1	U	UJ	< 2.7	U	UJ
GP-17	GP-17-15-DUP	15 ft	1/7/2013	< 7	U	UJ	< 7	U	UJ	< 7	U	UJ	< 2.8	U	UJ	< 7	U	UJ
GP-17	GP-17-45	45 ft	1/7/2013	< 4.1	U	UJ	< 4.1	U	UJ	< 4.1	U	UJ	< 1.6	U	UJ	3.09	J	J
GP-17	GP-17-57	57 ft	1/7/2013	< 5.9	U	UJ	< 5.9	U	UJ	< 5.9	U	UJ	< 2.4	U	UJ	< 5.9	U	UJ
GP-17	GP-17-65	65 ft	1/7/2013	< 0.39	U	UJ	< 0.39	U	UJ	< 0.39	U	UJ	< 0.16	U	UJ	< 0.39	U	UJ
GP-18	GP-18-21	21 ft	1/8/2013	< 1.8	U	UJ	< 1.8	U	UJ	< 1.8	U	UJ	< 0.72	U	UJ	< 1.8	U	UJ
GP-18	GP-18-37	37 ft	1/8/2013	< 5.1	U	UJ	< 5.1	U	UJ	< 5.1	U	UJ	< 2	U	UJ	< 5.1	U	UJ
GP-18	GP-18-53	53 ft	1/8/2013	< 6.7	U	UJ	< 6.7	U	UJ	< 6.7	U	UJ	< 2.7	U	UJ	< 6.7	U	UJ
GP-18	GP-18-63	63 ft	1/8/2013	< 2.6	U	UJ	< 2.6	U	UJ	< 2.6	U	UJ	< 1.1	U	UJ	< 2.6	U	UJ

SEE LAST PAGE OF TABLE FOR NOTES

ATTACHMENT G
GP BORINGS SOIL ANALYTICAL DATA 2012-2013

Location	Sample ID	Depth	Sample Date	trans-1,2-Dichloroethene (mg/kg)			trans-1,3-Dichloropropene (mg/kg)			Trichloroethene (mg/kg)			Trichlorofluoromethane (mg/kg)			Vinyl acetate (mg/kg)		
				Result	Lab Quals	AECOM Quals	Result	Lab Quals	AECOM Quals	Result	Lab Quals	AECOM Quals	Result	Lab Quals	AECOM Quals	Result	Lab Quals	AECOM Quals
GP-15	GP-15-19	19 ft	12/18/2012	< 0.5	U		< 0.5	U		< 0.5	U		< 0.5	U		< 1.2	U	
GP-15	GP-15-29	29 ft	12/18/2012	< 0.0022	U		< 0.0022	U		< 0.0022	U		< 0.0022	U		< 0.0055	U	
GP-15	GP-15-37	37 ft	12/18/2012	< 4.9	U		< 4.9	U		< 4.9	U		< 4.9	U		< 12	U	
GP-15	GP-15-37-DUP	37 ft	12/18/2012	< 0.22	U		< 0.22	U		< 0.22	U		< 0.22	U		0.236	J	
GP-15	GP-15-47	47 ft	12/18/2012	< 1.2	U		< 1.2	U		< 1.2	U		< 1.2	U		< 3	U	
GP-15	GP-15-55	55 ft	12/18/2012	< 2	U		< 2	U		< 2	U		< 2	U		17.1		
GP-15	GP-15-74	74 ft	12/21/2012	< 0.23	U		< 0.23	U		< 0.23	U		< 0.23	U		< 0.57	U	
GP-15	GP-15-89	89 ft	12/21/2012	< 0.21	U		< 0.21	U		< 0.21	U		< 0.21	U		< 0.52	U	
GP-16	GP-16-23	23 ft	1/3/2013	< 0.0026	U		< 0.0026	U		< 0.0026	U		< 0.0026	U		< 0.0065	U	
GP-16	GP-16-42	42 ft	1/3/2013	< 0.23	U		< 0.23	U		< 0.23	U		< 0.23	U		< 0.57	U	
GP-16	GP-16-51	51 ft	1/3/2013	< 0.21	U		< 0.21	U		< 0.21	U		< 0.21	U		< 0.52	U	
GP-16	GP-16-57	57 ft	1/3/2013	< 0.21	U		< 0.21	U		< 0.21	U		< 0.21	U		< 0.52	U	
GP-16	GP-16-57-DUP	57 ft	1/3/2013	< 0.24	U		< 0.24	U		< 0.24	U		< 0.24	U		< 0.59	U	
GP-16	GP-16-77	77 ft	1/3/2013	< 0.19	U		< 0.19	U		< 0.19	U		< 0.19	U		< 0.49	U	
GP-16	GP-16-91	91 ft	1/7/2013	< 0.0019	U		< 0.0019	U		< 0.0019	U		< 0.0019	U		< 0.0048	U	
GP-17	GP-17-15	15 ft	1/7/2013	< 1.1	U	UJ	< 1.1	U	UJ	< 1.1	U	UJ	< 1.1	U	UJ	< 2.7	U	UJ
GP-17	GP-17-15-DUP	15 ft	1/7/2013	< 2.8	U	UJ	< 2.8	U	UJ	< 2.8	U	UJ	< 2.8	U	UJ	< 7	U	UJ
GP-17	GP-17-45	45 ft	1/7/2013	< 1.6	U	UJ	< 1.6	U	UJ	< 1.6	U	UJ	< 1.6	U	UJ	< 4.1	U	UJ
GP-17	GP-17-57	57 ft	1/7/2013	< 2.4	U	UJ	< 2.4	U	UJ	< 2.4	U	UJ	< 2.4	U	UJ	< 5.9	U	UJ
GP-17	GP-17-65	65 ft	1/7/2013	< 0.16	U	UJ	< 0.16	U	UJ	< 0.16	U	UJ	< 0.16	U	UJ	< 0.39	U	UJ
GP-18	GP-18-21	21 ft	1/8/2013	< 0.72	U	UJ	< 0.72	U	UJ	< 0.72	U	UJ	< 0.72	U	UJ	< 1.8	U	UJ
GP-18	GP-18-37	37 ft	1/8/2013	< 2	U	UJ	< 2	U	UJ	< 2	U	UJ	< 2	U	UJ	< 5.1	U	UJ
GP-18	GP-18-53	53 ft	1/8/2013	< 2.7	U	UJ	< 2.7	U	UJ	< 2.7	U	UJ	< 2.7	U	UJ	< 6.7	U	UJ
GP-18	GP-18-63	63 ft	1/8/2013	< 1.1	U	UJ	< 1.1	U	UJ	< 1.1	U	UJ	< 1.1	U	UJ	< 2.6	U	UJ

SEE LAST PAGE OF TABLE FOR NOTES

ATTACHMENT G
GP BORINGS SOIL ANALYTICAL DATA 2012-2013

Location	Sample ID	Depth	Sample Date	Vinyl chloride (mg/kg)			Xylenes (total) (mg/kg)		
				Result	Lab Quals	AECOM Quals	Result	Lab Quals	AECOM Quals
GP-15	GP-15-19	19 ft	12/18/2012	< 0.5	U		1.66		
GP-15	GP-15-29	29 ft	12/18/2012	< 0.0022	U		0.0016		J
GP-15	GP-15-37	37 ft	12/18/2012	< 4.9	U		16.9		
GP-15	GP-15-37-DUP	37 ft	12/18/2012	< 0.22	U		21.8		
GP-15	GP-15-47	47 ft	12/18/2012	< 1.2	U		6.43		
GP-15	GP-15-55	55 ft	12/18/2012	< 2	U		353		
GP-15	GP-15-74	74 ft	12/21/2012	< 0.23	U		0.5		
GP-15	GP-15-89	89 ft	12/21/2012	< 0.21	U		< 0.21		U
GP-16	GP-16-23	23 ft	1/3/2013	< 0.0026	U		0.00078		J
GP-16	GP-16-42	42 ft	1/3/2013	< 0.23	U		0.735		
GP-16	GP-16-51	51 ft	1/3/2013	< 0.21	U		0.895		
GP-16	GP-16-57	57 ft	1/3/2013	< 0.21	U		73.5	J	
GP-16	GP-16-57-DUP	57 ft	1/3/2013	< 0.24	U		47.6	J	
GP-16	GP-16-77	77 ft	1/3/2013	< 0.19	U		2.02		
GP-16	GP-16-91	91 ft	1/7/2013	< 0.0019	U		0.0128		
GP-17	GP-17-15	15 ft	1/7/2013	< 1.1	U	UJ	7.28	J	
GP-17	GP-17-15-DUP	15 ft	1/7/2013	< 2.8	U	UJ	12.3	J	
GP-17	GP-17-45	45 ft	1/7/2013	< 1.6	U	UJ	3.68	J	
GP-17	GP-17-57	57 ft	1/7/2013	< 2.4	U	UJ	< 2.4	UJ	U
GP-17	GP-17-65	65 ft	1/7/2013	< 0.16	U	UJ	1.16	J	
GP-18	GP-18-21	21 ft	1/8/2013	< 0.72	U	UJ	< 0.72	UJ	U
GP-18	GP-18-37	37 ft	1/8/2013	< 2	U	UJ	3.32	J	
GP-18	GP-18-53	53 ft	1/8/2013	< 2.7	U	UJ	< 2.7	UJ	U
GP-18	GP-18-63	63 ft	1/8/2013	< 1.1	U	UJ	1.41	J	

Lab Qualifiers
J = Estimated value; results between the MDL and RL
U = Compound analyzed for but not detected above the RL

AECOM Qualifiers
J = Estimated detection
UJ = Estimated non-detect
U = Non-detect due to blank contamination

This table was originally Appendix 3-B in the TACO Tier 3 Demonstration Part 1: Site Characterization Summary; Prepared for Shell Oil Products US (Shell); dated April 6, 2017

Attachment H
Treatment Area PID Monitoring Log

PWY SEE Treatment Area Daily PID Monitoring Sheet

Sampler Name: _____

Date: _____

Instrument/SN Used: _____

Rental Company: _____

Instructions:
- Walk perimeter of Areas A and B with PID, monitoring near the ground surface.
- Check piping and fittings at Equipment Pad.
- If any leaks or emissions are found, notify SEE system operator and AECOM Field Lead so that that issues may be quickly remedied.
- Only record PID readings that are greater than 0.0 ppm.

Area (A, B, or Equipment Pad)	Time	Location of Elevated Reading	Nearest Well (MPE or SI)	PID (ppm)	Were you able to fix leak on the spot?	Comments

Additional Notes:

I certify that no leaks were found, other than those listed above. If no PID information is entered on form, I certify that no leaks were found today.

Signature: _____

Attachment I
Mann-Kendall Analysis Information

National Nonpoint Source Monitoring Program

TechNOTES 6

November 2011

Donald W. Meals, Jean Spooner, Steven A. Dressing, and Jon B. Harcum. 2011. Statistical analysis for monotonic trends, Tech Notes 6, November 2011. Developed for U.S. Environmental Protection Agency by Tetra Tech, Inc., Fairfax, VA, 23 p. Available online at *https://www.epa.gov/polluted-runoff-nonpoint-source-pollution/nonpoint-source-monitoring-technical-notes*.

Through the National Nonpoint Source Monitoring Program **(NNPSMP)**, states monitor and evaluate a subset of watershed projects funded by the Clean Water Act Section 319 Nonpoint Source Control Program.

The program has two major objectives:

1. To scientifically evaluate the effectiveness of watershed technologies designed to control nonpoint source pollution
2. To improve our understanding of nonpoint source pollution

NNPSMP Tech Notes is a series of publications that shares this unique research and monitoring effort. It offers guidance on data collection, implementation of pollution control technologies, and monitoring design, as well as case studies that illustrate principles in action.

Statistical Analysis for Monotonic Trends

Introduction

The purpose of this technical note is to present and demonstrate the basic analysis of long-term water quality data for trends. This publication is targeted toward persons involved in watershed nonpoint source monitoring and evaluation projects such as those in the National Nonpoint Source Monitoring Program (NNPSMP) and the Mississippi River Basin Initiative, where documentation of water quality response to the implementation of management measures is the objective. The relatively simple trend analysis techniques discussed below are applicable to water quality monitoring data collected at fixed stations over time. Data collected from multiple monitoring stations in programs intentionally designed to document response to treatment (e.g., paired-watershed studies or above/below-before/after with control) or using probabilistic monitoring designs may need to apply other techniques not covered in this technical note.

Trend analysis can answer questions like: "Are streamflows increasing as urbanization increases?" or "Have nutrient loads decreased since the TMDL was implemented?"

Trend Analysis

For a series of observations over time—mean annual temperature, or weekly phosphorus concentrations in a river—it is natural to ask whether the values are going up, down, or staying the same. Trend analysis can be applied to all the water quality variables and all sampling locations in a project, not just the watershed outlet or the receiving water.

Broadly speaking, trends occur in two ways: a gradual change over time that is consistent in direction (monotonic[1]) or an abrupt shift at a specific point in time (step trend). In watershed monitoring, the questions might be "Are streamflows increasing as urbanization increases?" [a monotonic trend] or "Did nonpoint source nutrient loads decrease after the TMDL was implemented in 2002?" [a step trend]. When a monitoring project involves widespread implementation of best management practices (BMPs), it is usually desirable

[1] Linear trends are a subset of monotonic trends.

to know if water quality is improving: "Have suspended sediment concentrations gone down as conservation tillage adoption has gradually increased?" [a monotonic trend] or "Has the stream macroinvertebrate community improved after cows were excluded from the stream with fencing in 2005?" [a step trend]. If water quality is improving, it is also important to be able to state the degree of improvement.

Trend analysis has advantages and disadvantages for the evaluation of nonpoint source projects, depending on the specific situation (Table 1). Simple trend analysis may be the best—or only—approach to documenting response to treatment in situations where treatment was widespread, gradual, and inadequately documented, or where water quality data are collected only at a single watershed outlet station. For data from a short-term (e.g., 3 years) monitoring project operated according to a paired-watershed design (Clausen and Spooner 1993), analysis of covariance (ANCOVA) using data from the control watershed may be more appropriate than trend analysis to evaluate response to treatment because it directly accounts for the influences of climate and hydrology in a short-term data set. In contrast, for a long data record from a single watershed outlet station, trend analysis may be the best approach to evaluate gradual change resulting from widespread BMP implementation in the watershed in the absence of data from a control site.

Table 1. Advantages and disadvantages of simple trend analysis as the principal approach for evaluation of nonpoint source monitoring projects.

Advantages	Disadvantages
Can be done on data from a single monitoring station	Usually requires long, continuous data record
Does not require calibration period	Difficult to account for variability in water quality data solely related to changes in land treatment or land management
Applicable to large receiving waterbodies that may be subject to many influences	Not as powerful as other watershed monitoring designs that have baseline (or pre-BMP data) with controls (e.g., control watershed or upstream data), especially with small sample sizes
Useful for BMPs that develop slowly or situations with long lag times	Provides no insight into cause(s) of trend

The application of trend analysis to evaluate the effects of a water quality project depends on the monitoring design. Data from a watershed project that uses an upstream/downstream or before/after study design where intensive land treatment occurs over a short period generating an abrupt or step change may be evaluated for a step trend using a variety of parametric and nonparametric tests including the two sample t-test, paired t-test, sign test, analysis of (co)variance, or Kruskal-Wallis test. In general, these tests are most applicable when the data can be divided into logical groups.

On the other hand, data from long-term, fixed-station monitoring programs where gradual responses such as those due to incremental BMP implementation or continual urbanization are of most interest, are more aptly evaluated with monotonic trend analyses that correlate the response variable (i.e., pollutant concentration or load) with time or other independent variables. These types of analyses are useful in situations where vegetative BMPs like the riparian buffers implemented in the Stroud Preserve NNPSMP project (Newbold et al. 2008) must mature, resulting in gradual effects expressed over time. Trend analysis of data collected in a large receiving waterbody such as a lake or estuary may be the principal way of evaluating large, complex watershed programs. The Chesapeake Bay Program has conducted trend analyses since the early 1990s to detect and quantify water quality responses in the Bay to nutrient reduction actions to measure progress toward Bay restoration goals (CBP 2007). While the examples in this technical note focus on detection of changes in concentration of individual pollutants with respect to time, these tools can also be used when evaluating the relationship between variables such as chlorophyll and nutrients.

Trend analysis needs to account for the variability in water quality data that can be due to many factors, including:

- Seasonal cycles;
- Diurnal cycles;
- Variations in hydrology and weather;
- Human activities and management;
- Measurement error;
- Natural variability; and
- Actual trends

Statistical trend analysis can help to identify trends and estimate the rate of change, but will not provide much insight in attributing a trend to a particular cause. Interpreting the cause of a trend requires knowledge of the watershed, and a specific study design.

The task of trend analysis is to characterize and account for other sources of variation and to identify and quantify the actual trend in a statistically rigorous way.

It is important to recognize some other limitations of trend analysis. Trend analysis is more effective with longer periods of record. Short monitoring periods and small sample sizes make documentation of trends more difficult. Most importantly, the statistical methods discussed below can help identify trends and estimate the rate of change, but will not provide much insight in attributing a trend to a particular cause. Interpreting the cause of a trend requires knowledge of hydrologic processes, land use, and human activities in the watershed. Establishing causality requires a different study design.

Finally, in looking for trends in water quality, it is important to recognize that some increasing or decreasing patterns in water quality especially over short time periods are **not** trends. Many water quality variables exhibit seasonality as a result of temperature,

precipitation, and flow. A snapshot of water quality data from a few months may suggest an increasing trend, while examination of an entire year shows this "trend" to be part of a regular cycle associated with temperature, precipitation, or cultural practices. Autocorrelation—the tendency for the value of an observation to be similar to the observation immediately before it—may also be mistaken for a trend over the short term. Changes in sampling schedules, field methods, personnel, or laboratory practices may also cause shifts in data that could be erroneously interpreted as trends. Characterization of project data through exploratory data analysis (see *Tech Note #1*) will help recognize and account for such features in a dataset.

All increasing or decreasing patterns in water quality are not trends. Characterize your data to avoid misinterpreting seasonal cycles, autocorrelation, or changes in monitoring methods as significant trends.

General Considerations

Is a simple trend analysis appropriate?

The first step in trend analysis is to decide if it is an appropriate tool for answering the questions you have about project data. Effective trend analysis requires a fairly long sequence of data collected at a fixed location, collected by consistent methods, with few long gaps. It has been suggested that five years of monthly data are the minimum for monotonic trend (continuous rate of change, increasing or decreasing) analysis; for a step trend (abrupt shift up or down), at least two years of monthly data before and after treatment are required (Hirsch 1988). These time frames are only guidelines; longer periods of record and/or more intensive sampling frequency would generally provide a greater sensitivity to detect smaller changes. Trend analysis is best suited for a situation where the land treatment program has been successful in implementing BMPs over an extensive portion of the critical area, implementation occurs over several years, and water quality change is expected to be gradual.

The water resource type, project design, type of land treatment, and implementation schedule largely determine the type of trend to be expected. Most of the trend analysis techniques discussed in this publication apply to the evaluation of a monotonic trend, the kind of change that might be expected in response to gradual, widespread implementation of BMPs. Step trends may occur in response to an abrupt change in the watershed, such as the completion of a detention pond or a ban on winter manure application. To properly evaluate a step trend, it is critical to have a solid *a priori* hypothesis concerning when the step change took place; examination of the data themselves to search for the best place to locate a shift is inappropriate. Although techniques exist for testing for step trends, in many cases a two-sample test (e.g., t-test of before vs. after) may be a better choice when an abrupt change at a specific point in time is expected.

Explore the data first

Before beginning trend analysis, define the question that needs to be answered and then conduct exploratory data analysis (EDA) on the data set (see *Tech Note #1*). EDA will often give preliminary indications of trends and set the stage for further trend analysis. Use EDA to evaluate how well the data satisfy assumptions of parametric statistical analysis (normal distribution, constant variance, and independence), evaluate the effectiveness of transformations, and characterize relationships between variables. EDA can reveal important explanatory variables (covariates) like flow or precipitation that drive dependent variables at this point. Some trend analysis techniques can account for covariates.

Evaluate the data set for significant missing observations, such as a year-long interruption in the middle of a 7-year program. Some techniques are sensitive to gaps in data collection. If a long gap exists in the data, step trend procedures (e.g., assessing the difference in sample means between the two periods using a two-sample t-test) may be more appropriate than the monotonic trend analysis techniques discussed below. Although there is no specific decision rule, Helsel and Hirsch (1992) advise using step trend rather than monotonic trend analysis if a data gap is greater than one-third of the total record.

Select variables

Trend analysis can be applied to all the water quality variables and all sampling locations in the project. In large projects tracking many variables at many stations, this can be a daunting task. If full analysis is not feasible, there are several options. First, a subset of monitored variables can be selected, focusing on those expected to be most responsive to land treatment or those that directly relate to water quality impairment. Alternatively, it may be possible to use an index that combines information from a number of variables, such as the Index of Biotic Integrity (IBI) for stream fish communities (Karr 1981), or the Oregon Water Quality Index (OWQI) that integrates measurements of temperature, dissolved oxygen, BOD, pH, ammonia+nitrate nitrogen, total phosphate, total solids, and fecal coliform (Cude 2005). Third, overall water quality trends have been efficiently assessed and presented by conducting trend analysis on principal components as surrogate variables for individual water quality constituents (Ye and Zou 1993).

Data reduction and flow adjustment

Before proceeding to trend analysis tests, it may be necessary or beneficial to perform some preliminary data reduction. Transformations may be necessary to satisfy assumptions for parametric analysis. If sampling has been collected regularly at very frequent intervals, the data can be aggregated to standard periods (e.g., from daily observations to monthly means or medians). Adjusting data because of changing sampling frequency (i.e., weekly

in years 1–5, monthly in years 6–10) requires subsampling from the higher frequency data to create data of the same frequency as the lower frequency to preserve constant variance. For example, do not compute monthly averages from weekly data in the early part of the record to combine with monthly data collected in the more recent part of the record. Rather, randomly choose one sample per month from the weekly data to construct a consistent data record of monthly samples. On the other hand, aggregating data, by computing monthly means or medians from weekly data throughout the period of record will reduce autocorrelation.

The flow-weighted or time-weighted mean concentrations are common methods to aggregate data collected with high frequency (Richards and Baker 1993). Flow-weighted mean concentration (FWMC) can be defined as:

$$FWMC = \frac{\sum c_i q_i t_i}{\sum q_i t_i}$$

where c_i is the concentration of the ith sample, q_i is the instantaneous flow associated with the ith sample, and t_i is the time associated with the ith sample. In other words, the FWMC is calculated by dividing the total pollutant load by the total flow volume over a given time period. The FWMC can be thought of as pollutant load normalized for flow or a flow-proportional concentration.

The time-weighted mean concentration (TWMC) can be defined as:

$$TWMC = \frac{\sum c_i t_i}{\sum t_i}$$

In a fixed-frequency sampling program, the TWMC would be identical to the **arithmetic mean** of the observed concentrations.

Because much of the variance in nonpoint source pollutant concentrations may result from variation in streamflow, flow adjustment is a common technique to prepare for trend analysis. Removing this source of variance from the data makes subsequent trend tests more powerful and prevents the identification of a trend in concentration when it is the result of correlation with flow. When flow effects are removed from a record of concentrations, the test performed becomes a test for a time trend in the flow-adjusted concentrations versus time.

Flow adjustment is a common technique to prepare for trend analysis. Removing this source of variance from the data makes subsequent trend tests more powerful and prevents the identification of a trend in concentration when it is the result of correlation with flow.

A regression of concentration against some function of discharge is computed and the residuals (the differences between observed concentrations and concentrations predicted from the regression, i.e., flow-adjusted concentrations) are then tested for trend. Examples of this analysis are found in Hirsch et al. (1991) and Helsel and Hirsch (1992). This

technique requires that a relationship exists between concentration and discharge. For this procedure to be valid, the streamflow distribution must be stationary, i.e., be itself free of trend. If the distribution of streamflow has changed over the period of record (e.g., because of diversions, detention ponds, or stormwater BMPs), then residuals analysis or any other flow-adjustment technique should not be used. Presence or absence of trend in flow can be verified through knowledge of changes in watershed hydrology or by independent analysis of trends in the streamflow record itself. Where streamflows are not stationary, it may be possible to remove the effects of varying hydrologic conditions on the concentration variable by using some appropriate measure of basin precipitation as a covariate or account for hydrologic changes by other trend analysis techniques.

Alternatively, because land treatment effects are generally expected to change the relationship between concentrations and flow, an analysis of covariance will usually be appropriate.

Graphing

Before proceeding to intensive numerical analysis, it is useful to re-examine the time series plots developed earlier in the process of exploratory data analysis. Visual inspection of a time series plot is the easiest way to look for a trend, but data variability may obscure a trend. Visualization of trends in noisy data can be clarified by various data smoothing techniques. Plotting moving averages or medians, for example, instead of raw data points, reduces apparent variation and may reveal general tendencies. Spreadsheets like Excel can display a moving-average trend line in time-series scatterplots with adjustable averaging periods. A more complex smoothing algorithm, such as *LOWESS* (*LO*cally *WE*ighted *S*catterplot *S*moothing), can reveal patterns in very large datasets that would be difficult to resolve by eye. LOWESS is computationally intensive (see Helsel and Hirsch 1992), but computer programs exist that make the procedure relatively easy to accomplish.

Note, however, that visualization has limitations because people tend to focus on outliers, strong seasonal variation can mask trends in a variable of interest, and gradual trends are difficult to detect by eye alone. Additionally, simple visualization cannot adequately quantify the magnitude of a trend. Visualization is not a substitute for the hypothesis testing discussed below.

Monotonic Trend Analysis

A number of statistical tests are available to identify and quantify monotonic trends in a way that is defensible and repeatable. Statistical trend analysis is a hypothesis-testing process. The null hypothesis (H_O) is that there is no trend; each test has its own parameters for accepting or rejecting H_O. Failure to reject H_O does not prove that there

is not a trend, but indicates that the evidence is not sufficient to conclude with a specified level of confidence that a trend exists.

Table 2 lists some trend tests available for different circumstances, including adjustments for a covariate and the presence of seasonality. The tests are further divided into parametric, nonparametric, and mixed types. Parametric tests are considered more powerful and/or sensitive to detect significant trends than are nonparametric tests, especially with a small sample number. However, unless the assumption of normal distribution for parametric statistics is met, it is generally advisable to use a nonparametric test (Lettenmaier 1976, Hirsch et al. 1991, Thas et al. 1998). Both parametric and nonparametric tests require constant variance and independence. Methods for testing assumptions of distribution, constant variance, and independence required for parametric linear regressions are discussed in detail in USEPA (1997a). Nonparametric tests provide higher statistical power in case of nonnormality and are robust against outliers and large data gaps.

Table 2. Classification of tests for trend (adapted from Helsel and Hirsch 1992)

	Type of test	Not Adjusted for covariate (X)	Adjusted for covariate (X)
No seasonality	Parametric	Linear regression of Y on t	Multiple linear regression of Y on X and t
	Mixed	–	Mann-Kendall on residuals from regression of Y on X
	Nonparametric	Mann-Kendall	Mann-Kendall on residuals from LOWESS of Y on X
Seasonality	Parametric	Linear regression of Y on t and periodic functions	Multiple linear regression of Y on X, t, and periodic functions
	Mixed	Regression of deseasonalized Y on t	Seasonal Kendall on residuals from regression of Y on X
	Nonparametric	Seasonal Kendall on Y	Seasonal Kendall on residuals from LOWESS of Y on X

Y = dependent variable of interest; X = covariate, t = time

These tests will be discussed below, with emphasis on linear regression, Mann-Kendall, and seasonal Kendall procedures. For more detailed information, consult the references listed at the end of this technical note.

Tests without covariates (Y versus time)

Parametric test: Linear regression of Y on t (Example 1, p. 18).

If project data satisfy all the assumptions necessary for linear regression (Y is linearly related to t, residuals are normally distributed, residuals are independent, and variance of residuals is constant), a simple linear regression of Y on time is a test for linear trend:

$$Y = \beta_0 + \beta_1 t + \varepsilon$$

The null hypothesis is that the slope coefficient $\beta_1 = 0$. The t-statistic on β_1 is tested to determine if it is significantly different from zero. If the slope is nonzero, the null

hypothesis is rejected and it can be concluded that there is a linear trend in Y over time, with rate equal to β_1. Missing values are allowed. In some cases, it might have been necessary to log transform the data to satisfy the above regression assumptions. In this case, the trend slope will be expressed in log units. A linear trend in log units is an exponential trend in original units. This can be expressed in percent per year to make the trend easier to interpret. If β_1 is the estimated slope of the linear trend in $\log_{10}$ units, then the percentage change over any given year is $(10^{\beta 1} - 1)*100$. When there is no trend, the slope is zero and the equation results in zero percent change (i.e., $\beta_1 = 0$).

Nonparametric test: Mann-Kendall (Example 2, p. 19)

If the data do not conform to a normal distribution, the Mann-Kendall test can be applied. This test evaluates whether y values tend to increase or decrease over time through what is essentially a nonparametric form of monontonic trend regression analysis. The Mann-Kendall test analyzes the sign of the difference between later-measured data and earlier-measured data. Each later-measured value is compared to all values measured earlier, resulting in a total of n(n-1)/2 possible pairs of data, where n is the total number of observations. Missing values are allowed and the data do not need to conform to any particular distribution. The Mann-Kendall test assumes that a value can always be declared less than, greater than, or equal to another value; that data are independent; and that the distribution of data remain constant in either the original units or transformed units (Helsel and Hirsch 1992). Because the Mann-Kendall test statistics are invariant to transformations such as logs (i.e., the test statistics will be the same value for both raw and log-transformed data), the Mann-Kendall test is applicable in many situations.

To perform a Mann-Kendall test, compute the difference between the later-measured value and all earlier-measured values, $(y_j - y_i)$, where $j>i$, and assign the integer value of 1, 0, or –1 to positive differences, no differences, and negative differences, respectively. The test statistic, S, is then computed as the sum of the integers:

$$S = \sum_{i=1}^{n-1} \sum_{j=i+1}^{n} \text{sign}\,(y_j - y_i)$$

Where $\text{sign}(y_j - y_i)$, is equal to +1, 0, or –1 as indicated above.

When S is a large positive number, later-measured values tend to be larger than earlier values and an upward trend is indicated. When S is a large negative number, later values tend to be smaller than earlier values and a downward trend is indicated. When the absolute value of S is small, no trend is indicated. The test statistic τ can be computed as:

$$\tau = \frac{S}{n(n-1)/2}$$

which has a range of –1 to +1 and is analogous to the correlation coefficient in regression analysis. The null hypothesis of no trend is rejected when S and τ are significantly different from zero. If a significant trend is found, the rate of change can be calculated using the Sen slope estimator (Helsel and Hirsch 1992):

$$\beta_1 = \text{median}\left(\frac{y_j - y_i}{x_j - x_i}\right)$$

for all $i < j$ and $i = 1, 2, \ldots, n-1$ and $j = 2, 3, \ldots, n$; in other words, computing the slope for all pairs of data that were used to compute S. The median of those slopes is the Sen slope estimator.

Tests accounting for covariates

Variables other than time usually influence the behavior of water quality variables. These covariates are usually natural phenomena such as precipitation, temperature, or streamflow. By removing the variation caused by these explanatory variables, the noise may be reduced and a trend revealed. Correction for hydrologic and meteorologic variability is essential in both parametric and nonparametric trend tests to determine if the statistically significant trends are due to processes and transport changes such as land use changes, or to artifacts of system variability.

Selection of an appropriate covariate is critical. It should be a measure of the driving force behind the behavior of the variable of interest, but must not be subject to human manipulation during the course of the project, i.e., must not be changed by BMPs or the land treatment program. In nonpoint source monitoring, much of the variance in concentration data is usually a function of runoff and streamflow; thus, natural streamflow is a commonly used covariate in trend analysis. However, streamflow should not be used as a covariate if the land treatment program itself affects streamflow, such as with urban stormwater infiltration practices or conservation tillage. In such cases, precipitation may be a good choice for a covariate.

In deciding whether or not to remove the variation caused by flow from a data set, consider project objectives and the nature of the land treatment program. If a land treatment program has caused a measurable change in the watershed flow regime, such a change may in fact be a desired outcome and the resulting trend in both flow and pollutant concentration may be important to detect and quantify. Removing variation caused by flow may risk reducing the magnitude of any trend in concentration alone below detection level, considering other noise in the system. On the other hand, failure to account for a trend in flow that is not associated with the land treatment program may result in showing a trend in concentration where none exists. It is generally advisable to test the covariate data set independently for trend before proceeding.

Parametric: Multiple linear regression of Y on X and t

Multiple linear regression can be used to account for the effects of other variables such as flow, land management, or other water quality characteristics on a response variable. Multiple regression includes covariates in trend analysis in a single step. Appropriate covariates are those that are correlated with the water quality variable Y and adjust for changes in climate to better isolate trends due to BMPs. Consider multiple regression of concentration (Y) versus time (t) and flow (Q):

$$Y = \beta_0 + \beta_1 t + \beta_2 Q + \varepsilon$$

The test accounts for the effects of the covariate by including them in the regression model. The null hypothesis for the trend test is $\beta_1 = 0$; the t-statistic for β_1 tests for trend. If the coefficient β_2 for the covariate is not significantly different from zero, the effect of the covariate is not significant and a simple regression model of Y on t should be used. An exception to this would be the case where flow is increasing over time and the effects of increasing flow are already accounted for in the time component; in such a case, flow might still be logically included in the regression model even if β_2 is not different from zero. It should be emphasized that as for simple linear regression, the assumptions that Y is linearly related to t and Q, that residuals are normally distributed and independent, and that variance of residuals is constant must be satisfied to use this test properly.

Mixed: Mann-Kendall on residuals from regression of Y on X

This is a hybrid test that includes removal of covariate effects by a parametric procedure, followed by a nonparametric test for trend. If a reasonable linear regression can be obtained (i.e., residuals have no extreme outliers, Y is approximately linear with X), the regression between Y and one or more Xs (i.e., $Y = \beta_0 + \beta_1 X + \varepsilon$) can remove the effect of X prior to performing the Mann-Kendall test for trend.

The residuals (R) from the regression model are computed as observed minus predicted values:

$$R = Y - \beta_0 + \beta_1 X$$

Then the Kendall S statistic is computed on the R-time data pairs and tested to see if it differs significantly from zero. If assumptions for parametric statistics are seriously violated, a fully nonparametric alternative (e.g., using LOWESS) should be selected to estimate the relationship between Y and X as described in the next section.

Nonparametric: Mann-Kendall on residuals from LOWESS of Y on X

The LOWESS smoothing technique describes the relationship between Y and a covariate X without assuming linearity or normality of residuals. Applying LOWESS smoothing to a scatterplot of X and Y is roughly analogous to regression, without forcing a straight line. Given the LOWESS fitted value Y', the residuals (R) are computed as:

$$R = Y - Y'$$

Then, the Kendall S statistic is computed on the R–t data pairs and tested to see if it differs significantly from zero.

If the distribution of the data is unknown or known to violate parametric assumptions, this procedure should be used instead of the parametric or mixed tests.

Seasonality

Water quality data often show seasonal patterns that require trend analysis techniques that go beyond simply controlling for the effects of flow.

Frequently, changes between seasons are a major source of variation in water quality data because land management and use change with the seasons. Most concentrations in surface waters show strong seasonal patterns. Seasonal variation in streamflow is an important component of this seasonality, but biological processes (e.g., enhanced survival of fecal microorganisms in colder water temperatures, release of nitrogen through decomposition) and management activities (e.g., fertilizer applications, tillage) often contribute to seasonal variation. Thus, some techniques beyond controlling for the effects of a flow covariate are often necessary for water quality trend analysis.

Some trend analysis techniques require you to define a "season" in advance. Examination of box plots of data by season or other graphical displays may help identify reasonable divisions. In general, seasons should be just long enough so that some data are available for most of the seasons in most years of monitoring. If data are collected or aggregated on a monthly frequency, for example, seasons should be defined representing each of the 12 months. If data are considered in quarterly blocks, there should be four seasons. In agricultural settings, it may make sense to consider either two or four "seasons": cropping and non-cropping, or non-cropping, seed preparation, cropping, and harvest.

Parametric: Linear regression of Y on X, t, and periodic functions

Periodic functions like sine and cosine can be used to describe cyclic seasonal variations in a multiple regression model, with or without covariates. For an annual cycle:

$$Y_\tau = \beta_0 + \beta_1 \sin(2\pi t/n) + \beta_2 \cos(2\pi t/n) + \beta_3 t + \text{other terms} + \varepsilon_\tau$$

Where: t=1,2,3...N (N=total number of samples)
n = number of samples per year (e.g., 12 for monthly data, 52 for weekly data)
note: a "DATE" variable can be used instead of 't' with n=365.25 because 'DATE' is a daily value.

Where "other terms" are covariates such as flow, precipitation, or other influences. The trend test is conducted by determining if the slope coefficient on t (β_3) differs significantly from zero. This test assumes that the sine and cosine terms realistically simulate annual seasonal cycles. Of course, the usual assumptions of parametric regression must be met. If variability introduced by strong seasonality (e.g., extremely dry or wet season) is high enough to cause violation of parametric assumptions, it may become necessary to break out data by season before conducting trend analysis.

Mixed: Seasonal Kendall on residuals from regression of Y on X *and* Regression of deseasonalized Y on t

Two hybrid procedures may be used to account for seasonality. First, the seasonal Kendall test can be applied to residuals from a simple linear regression of Y versus X. This approach should only be used when the relationship of Y and X complies with the appropriate assumptions for parametric statistics.

Second, the data can be "deseasonalized" by subtracting seasonal medians or some other measure of seasonal effect from all the data within the season. The deseasonalized data is then regressed against time (Montgomery and Reckhow 1984). Although this technique has the advantage of producing a description of seasonality (seasonal medians), it has generally low statistical power.

Nonparametric: Seasonal Kendall on Y (Example 3, p. 21)

The seasonal Kendall test statistic is computed by performing a Mann-Kendall calculation for each season, then combining the results for each season. For monthly seasons, January observations are compared only to other January observations, etc. No comparisons are made across seasonal boundaries. The Seasonal Kendall test is highly robust and relatively powerful, and is often the recommended method for most water quality trend monitoring.

The S_k statistic is computed as the sum of the S from each season:

$$S_k = \sum_{i=1}^{m} S_i$$

where S_i is the S from the ith season and m is the number of seasons.

The seasonal statistics are summed and a Z statistic is computed; consult other sources for the method of calculating Z_{Sk} (e.g., Helsel and Hirsch 1992, USEPA 1997b). If the number of seasons and years are sufficiently large (seasons * years $\geq$ 25), the Z value may be compared to standard normal tables to test for a statistically significant trend. For fewer seasons/years, the applicability of standard normal tables has not been evaluated. An estimate of the trend slope for Y over time can be computed as the median of all slopes between data pairs within the same season using a generalized version of the Sen slope estimator described above. Consult other sources for the method of calculation (e.g., Helsel and Hirsch 1992, USEPA 1997b).

Emerging trend analysis techniques

A recent paper by Hirsch et al. (2010) called for a "next generation" of trend analysis techniques in response to the observations that new and longer monitoring data sets exist, new questions about the effectiveness of control efforts, and the availability of new

statistical tools. The authors identified seven critical attributes for the next generation of trend analysis:

- Focuses on revealing the nature and magnitude of change, rather than strict hypothesis testing;
- Does not assume that the flow-concentration relationship is constant over time;
- Makes no assumptions that seasonal patterns repeat exactly over the period of record, but allow the shape of seasonality to evolve over time;
- Allows the shape of an estimated trend to be driven by the data and not constrained to follow a specific form such as linear or quadratic; trend patterns should be allowed to differ for different seasons or flow conditions;
- Provides consistent results describing trends in both concentration and load;
- Provides not only estimates of trends in concentration and flux but also trend estimates where the variation in water quality due to variation in streamflow has been statistically removed; and
- Includes diagnostic tools to assist in understanding the nature of the changes that have taken place over time, e.g., to identify particular times of year or hydrologic conditions during which water quality changes are most pronounced.

The authors propose and demonstrate an experimental trend analysis technique called *Weighted Regressions on Time, Discharge, and Season* (WRTDS) that addresses these critical attributes. While a presentation of this approach is beyond the scope of this Tech Note, the reader is referred to the original paper for additional information.

Step Trends

Monotonic trend analysis may not be appropriate for all situations. Other statistical tests for discrete changes (step trends) should be applied where a known discrete event (like BMP implementation over a short period) has occurred. Testing for differences between the "before" and "after" conditions is done using two-sample procedures such as t-tests and analysis of covariance (parametric techniques) and nonparametric alternatives such as the rank-sum test, Mann-Whitney test, and the Hodges-Lehmann estimator of step-trend magnitude (Helsel and Hirsch 1992, Walker 1994).

Monitoring Program Design and Trend Analysis

Trend analysis is effective with data sampled continuously at fixed-time intervals. If you are presently designing your watershed monitoring program, here are key points to consider if you plan to use trend analysis to evaluate your project:

- Use consistent sampling locations throughout the monitoring period;
- Operate the monitoring program continuously, starting before implementation and continuing after implementation;

- Use consistent field and laboratory procedures;
- Collect data on important covariates to help explain variations in water quality; and
- Monitor land treatment, land use, and other nonpoint source-related activities in your watershed to provide information to help you interpret observed trends.

Statistical tools for trend analysis

Trend tests, especially nonparametric tests like the Mann-Kendall and seasonal Kendall are computationally intensive and are impractical to apply manually in most cases. Unfortunately, statistical software packages that calculate Mann-Kendall and other nonparametric analyses are less common than those that perform parametric tests. The table below lists some examples of software that will run some or all of the nonparametric tests discussed in this publication and web sites to visit for more information. *Practical Stats* (see Further Reading and Resources, below) provides a useful review of the capabilities of low-cost statistical software at: *http://www.practicalstats.com/aes/aes/DownloadsAES_files/Evaluation2.pdf*

Package Name	Web Site URL
Add-ins for MS Excel:	
XLStat	**http://www.xlstat.com/en/home/**
Analyse-it	**http://www.analyse-it.com/**
WinStat	**http://www.winstat.com/**
StatistiXL	**http://www.statistixl.com/default.aspx**
Fast Statistics	**http://www.fatesoft.com/excel/**
Stand-alone statistical software:	
ChemStat	**http://www.pointstar.com/ChemStat/chemstat.asp**
JMP	**http://www.jmp.com/**
MINITAB	**http://www.minitab.com/products/minitab/default.aspx**
R	**http://www.r-project.org/**
S-Plus	**http://www.msmiami.com/directory.cfm?CategoryID=42** [add-in programs for nonparametric trend analysis from USGS software library: **http://water.usgs.gov/software/S-PLUS/**]
SAS	**http://www.sas.com/technologies/analytics/statistics/index.html**
SPSS	**http://www.spss.com/spss/**
SYSTAT	**http://www.systat.com/products/Systat/**

Stand-alone Windows programs for running Mann-Kendall and Seasonal Kendall tests have been published by USGS and are available for free download at *http://pubs.usgs.gov/sir/2005/5275/*. An example of a custom-made spreadsheet calculator for running Mann-Kendall tests on quarterly data can be found at *http://www.in.gov/idem/4213.htm* (Indiana Department of Environmental Management 2011).

References

Chesapeake Bay Program. 2007. Chesapeake Bay 2007 health & restoration assessment. *http://www.chesapeakebay.net/content/publications/cbp_26038.pdf* [Accessed 9-15-2011]

Clausen, J.C. and J. Spooner. 1993. Paired watershed study design. 841-F-93-009. U.S. Environmental Protection Agency, Office of Water, Washington, DC

Cude, C. 2005. Specific examples of trend analysis using the Oregon water quality index. Oregon Department of Environmental Quality, Laboratory Division, *http://www.deq.state.or.us/lab/wqm/trendex.htm* [Accessed 9-15-2011]

Helsel, D.R. and R.M. Hirsch. 1992. *Statistical methods in water resources*. Studies in Environmental Science 49. New York: Elsevier. (available on-line as a pdf file at: *http://water.usgs.gov/pubs/twri/twri4a3/*) [Accessed 9-15-2011].

Helsel, D.R., D.K. Mueller, and J.R. Slack. 2005. Computer program for the Kendall family of trend tests. USGS Scientific Investigations Report 2005-5275, U.S. Geological Survey, Reston, VA. *http://pubs.usgs.gov/sir/2005/5275/* [Accessed 9-15-2011]

Hirsch, R.M. 1988. Statistical methods and sampling design for estimating step trends in surface water quality. *Water Resour. Res.* 24:493-503.

Hirsch, R.M., R.B. Alexander, and R.A. Smith.1991. Selection of methods for the detection and estimation of trends in water quality. *Water Resour. Res.* 27:803-813.

Hirsch, Robert M., Douglas L. Moyer, and Stacey A. Archfield, 2010. Weighted regressions on time, discharge, and season (WRTDS), with an application to Chesapeake Bay river inputs. *J. Am. Water Resour. Assoc.* 46(5):857-880.

Indiana Department of Environmental Management. 2011. Mann-Kendall spreadsheet. *http://www.in.gov/idem/4213.htm* [Accessed 9-15-2011].

Karr, J.R. 1981. Assessment of biotic integrity using fish communities. *Fisheries* 6(6):28-30.

Lettenmaier. D.P. 1976. Detection of trends in water quality data from records with dependent observations. *Water Resour. Res.* 12:1037-1046.

Meals, D.W. 2001. *Lake Champlain Basin agricultural watersheds section 319 national monitoring program project, final project report: May, 1994–September, 2000*. Vermont Dept. of Environmental Conservation, Waterbury, VT, 227 p.

Montgomery, R.H. and K.H. Reckhow. 1984. Techniques for detecting trends in lake water quality. *Water Resour. Bull.* 20(1):43-52.

Newbold, J.D., S. Herbert, B.W. Sweeney and P. Kiry. 2008. Water quality functions of a 15-year-old riparian forest buffer system. *NWQEP Notes* No. 130. NCSU Water Quality Group, NC State University, Raleigh, NC.

Richards, R.P. and D.B. Baker. 1993. Trends in nutrient and suspended sediment concentrations in Lake Erie tributaries, 1975-1990. *J. Great Lakes Res.* 19(2):200-211.

Thas O., L. Van Vooren, and J.P. Ottoy. 1998. Nonparametric test performance for trends in water quality with sampling design applications. *J. American Water Resour. Assoc.* 34(2):347-357.

US EPA. 1997a. Linear regression for nonpoint source pollution analysis. EPA-841-B-97-007. Office of Water, Washington, DC.

US EPA. 1997b. Monitoring guidance for determining the effectiveness of nonpoint source control projects. EPA 841-B-96-004. Office of Water, Washington, DC.

Walker, J.F. 1994. Statistical techniques for assessing water quality effects of BMPs. *J. Irr. Drainage Eng. ASCE.* 120(2):334-347.

Ye, Y-S and S. Zou. 1993. Relating trends of principal components to trends of water-quality constituents. *Water Resour. Bull.* 29(5):797-806.

Further Reading and Resources

There is far more to trend analysis than is covered in this technical note. For more details on the techniques and calculations discussed, examples, and information on other approaches, consult these additional sources:

Berryman, D., B. Bobee, D. Cluis, and J. Haemmerli. 1988. Nonparametric tests for trend detection in water quality time series. *Water Resour. Bull.* 24(3):545-556.

Gilbert, R.O. 1987. *Statistical methods for environmental pollution monitoring.* New York: Van Nostrand Reinhold.

Grabow, G.L., L.A. Lombardo, D.E. Line, and J. Spooner. 1999. Detecting water quality improvement as BMP effectiveness changes over time: use of SAS for trend analysis. *NWQEP Notes* No. 95. NCSU Water Quality Group, NC State University, Raleigh, NC.

Hirsch, R.M, J.R. Slack, and R.A. Smith. 1982. Techniques of trend analysis for monthly water quality data. *Water Resour. Res.* 18:107-121.

Practical Stats, offering statistical training for environmental sciences and natural resources, with emphasis on applied environmental statistics, nondetects data analysis, and multivariate analysis. *http://www.practicalstats.com/index.html* [Accessed 9-15-2011].

Rheem, S. and G.I. Holtzman. 1990. A SAS program for seasonal Kendall trend analysis of monthly water quality data. Proceedings, Sixteenth Annual SAS Users Group International (SUGI) Conference, February 17-20, 1991, New Orleans.

Richards, R.P. and D.B. Baker. 2002. Trends in water quality in LEASEQ rivers and streams (northwestern Ohio), 1975-1995. *J. Environ. Qual.* 31(1): 90 - 96.

Taylor, C.H. and J. C. Loftis. 1989. Testing for trend in lake and ground water time series. *Water Resour. Bull.* 25(4):715-726.

Trend analysis example 1: Simple linear regression

- Eight years of monthly total phosphorus concentration data from Samsonville Brook, a stream draining a Vermont agricultural watershed
- Data satisfy assumptions for regression after log transformation
  - Normal distribution
  - Constant variance
  - Independence (low autocorrelation)

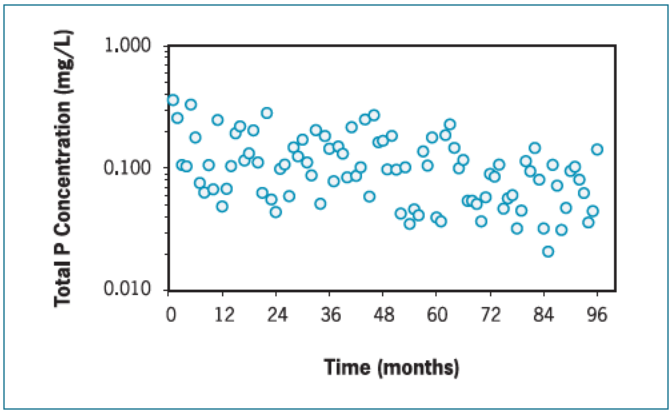

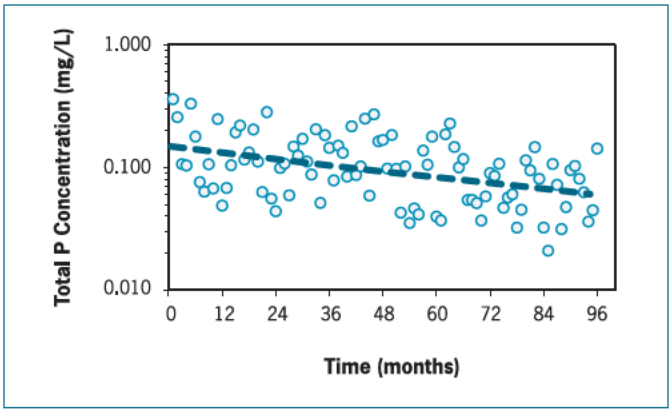

Simple linear regression
(using Excel or any basic statistical package)

$\text{Log [TP]} = -0.8285 - 0.00414(\text{Time})$

$r^2 = 0.18 \qquad F = 21.268 \qquad P \leq 0.001$

Rate of change:
Slope of log-transformed data = −0.00414

$(10^{-0.00414} - 1)*100 = -0.95\%$/month or ~11%/yr

This result suggests that total P concentrations have decreased significantly over the period at a rate of approximately 11% a year.

Note: data used in this example are taken from the Vermont NMP Project, *Lake Champlain Basin agricultural watersheds section 319 national monitoring program project*, 1993 – 2001 (Meals 2001).

Trend analysis example 2: Mann-Kendall

Month (n=25)	[TP] (mg/L)
1	0.180
5	0.200
9	0.250
13	0.068
17	0.201
21	0.063
25	0.099
29	0.125
33	0.205
37	0.078
41	0.216
45	0.059
49	0.098
53	0.102
57	0.137
61	0.037
65	0.100
69	0.051
73	0.180
77	0.060
81	0.095
85	0.021
89	0.120
93	0.063
97	0.035

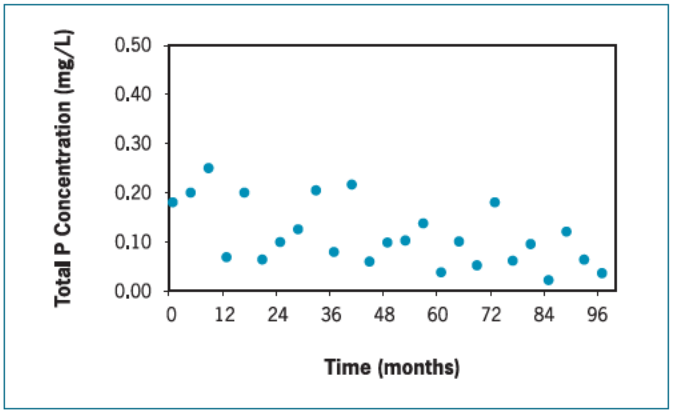

- Eight years of quarterly mean total phosphorus concentration data from Samsonville Brook, a stream draining a Vermont agricultural watershed
- Data satisfy assumptions for constant variance and independence, but are not normally-distributed without transformation

The Mann-Kendall trend test for this example may be evaluated in two ways. First, in a manual calculation, use the formulas below. The value of S (sum of the signs of differences between all combinations of observations) can be determined either manually or by using a spreadsheet to compare combinations, create dummy variables (–1, 0, and +1), and sum for S.

$$\text{Mann – Kendall} \qquad S = \sum_{i=1}^{n-1} \sum_{j=i+1}^{n} \text{sign}\,(y_j - y_i) = -106$$

$$\tau = \frac{S}{n(n-1)/2} = \frac{-106}{300} = -0.353 \longrightarrow \text{decreasing trend}$$

Calculating Z_S as $(S \pm 1)/\sigma_s$ where $\sigma_s = \sqrt{(n/18) \times (n-1) \times (2n+5)} = 42.817$

$$Z = \frac{-105}{42.817} = -2.454 \qquad \text{(USEPA 1997b)}$$

This Z statistic is significant at P = 0.014, indicating a significant trend, i.e., we are 98.6% confident there is a decreasing trend in TP. See USEPA (1997b) for the calculation of σ_S when there are ties among the data.

To estimate the rate of change, use the Sen slope estimator

$$\beta_1 = \text{median}\left(\frac{y_j - y_i}{x_j - x_i}\right)$$

211 individual slopes −0.00945 to +0.00766
median slope = −0.0011 mg/L/month = −0.013 mg/L/yr

This result suggests that total P concentration decreased significantly over the period at a rate of about 0.013 mg/L/yr.

Alternatively, use a statistics computer program to run the Mann-Kendall procedure. For example, using the USGS program for the Kendall family of tests (Helsel et al. 2005), set up a text data input file specifying the Mann-Kendall test (test #4) without flow adjustment ("0") or seasons (blanks) and name the data input file ("MKexample2.txt") as:

```
4 0   MKexample 2
1     0.180
5     0.200
9     0.250
.
.
97    0.035
```

The output from the program gives the same results as shown above, including the estimated slope of the trend (-0.0011) computed by the Sen slope estimator above:

```
          Kendall's tau Correlation Test
            US Geological Survey, 2005

Data set:          MK Example 2

The tau correlation coefficient is -0.353
      S =  -106.
      z =  -2.454
      p =  0.0141

The relation may be described by the equation:
      Y = 0.15412   +   -0.1125E-02 * X
```

Note: data used in this example are taken from the Vermont NMP Project, *Lake Champlain Basin agricultural watersheds section 319 national monitoring program project*, 1993 – 2001 (Meals 2001).

Helsel, D.R., D.K. Mueller, and J.R. Slack. 2005. Computer program for the Kendall family of trend tests. USGS Scientific Investigations Report 2005-5275, U.S. Geological Survey, Reston, VA. *http://pubs.usgs.gov/sir/2005/5275/*

Trend analysis example 3: Seasonal Kendall

- Six years of weekly *E. coli* data from a stream draining Godin Brook, a Vermont agricultural watershed
- Data satisfy assumptions for constant variance and independence, but are not normally-distributed without transformation
- Data display high degree of seasonality to the eye (low *E. coli* counts in winter, high counts in summer) due to influence of water temperature on bacteria survival and to grazing season

Raw data plotted:

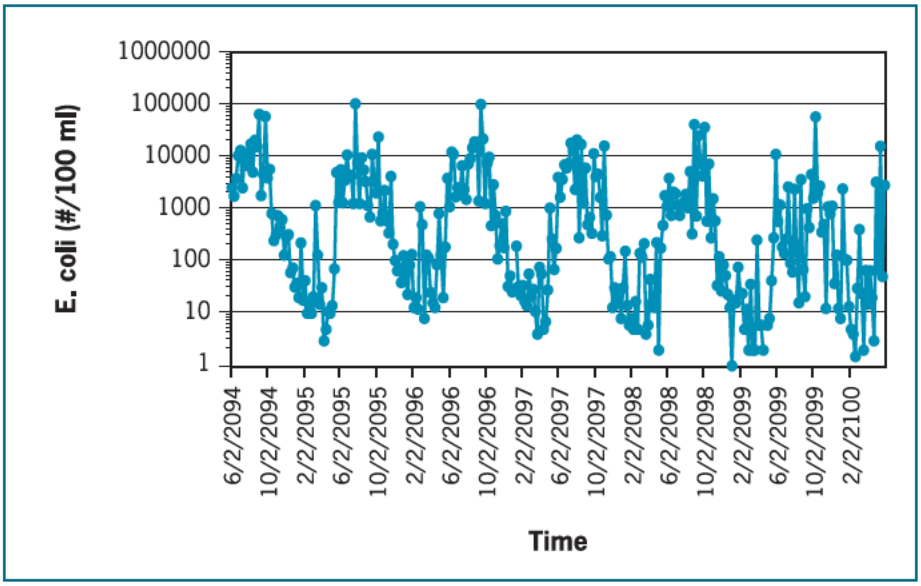

Data aggregated to monthly median values:

	Jun	Jul	Aug	Sep	Oct	Nov	Dec	Jan	Feb	Mar	Apr	May
1994	3750	7725	16350	4600	565	535	74					
1995	4400	5900	3300	2663	1530	345	69	29	12	31	8	688
1996	6788	2125	14500	11450	2900	190	43	72	20	69	50	185
1997	4825	13250	3635	592	4100	116	20	33.5	19	20	18	262
1998	2025	1200	3083	5825	1563	78	23	14	11	63	16	807.5
1999	378	265	109	1000	2360	653	37	21	8.5	19	6	161
2000								106	4.5	24	42	1432

(values represent *E. coli*/100 ml)

Monthly median data plotted still show a strong seasonal cycle:

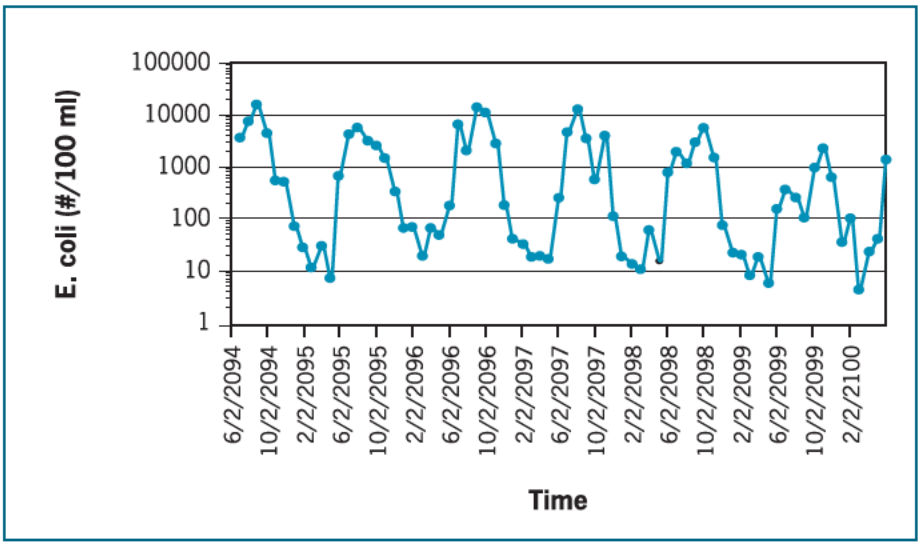

As in Example 2, the Seasonal Kendall trend test may be computed manually, using the formulas below, either by hand or using a spreadsheet:

The Mann-Kendall statistic (S_i) is calculated for each month; the seasonal Kendall statistic S_k calculated as sum of monthly S_i:

$$S_k = \sum_{i=1}^{m} S_i = -48 \qquad \text{suggesting a downward trend}$$

Z_{Sk} is estimated as $Z_{Sk}=(S+1)/\sigma_{Sk}$ where $\sigma_{Sk} = \sqrt{\sum_{i=1}^{m}(n_i/18) \times (n_i - 1) \times (2n_i + 5)}$

$$= 18.439$$

$$Z = \frac{-47}{18.439} = -2.549 \qquad \text{(USEPA 1997a)}$$

This Z statistic is significant at P = 0.011, indicating a significant decreasing trend.

To use the Sen slope estimator, calculate slopes between all possible pairs within each season, rank all slope estimates, and find the median:

$$\beta_1 = \text{median}\left(\frac{y_j - y_i}{x_j - x_i}\right)$$

180 individual slopes –13,050 to +11,200
median slope = –5.8 *E. coli*/100 ml/yr

This result suggests that *E. coli* counts have decreased significantly over the period at an approximate rate of 6 *E. coli*/100 ml/yr.

Alternatively, use a statistics computer program to run the Seasonal Kendall procedure. For example, using the USGS program for the Kendall family of tests (Helsel et al. 2005), set up a text data input file specifying the Seasonal Kendall test with data as year, season, and value (test #2) without flow adjustment ("0"), seasons (ignored for this type of input data) and name the data input file (SKexample3.txt) as:

```
2  0     SK Example 3
1994   6      3750
1994   7      7725
1994   8      16350
.
.
.
2000   3      24
2000   4      42
2000   5      1432
```

The output from the program gives the same results as shown above, including the estimated slope of the trend (–5.75) computed by the Sen slope estimator above:

```
                  Seasonal Kendall Test for Trend
                    US Geological Survey, 2005

Data set:          SK Example 3

The record is 7 complete water years with 12 seasons per
     year beginning in water year 1994.

The tau correlation coefficient is -0.267
     S =  -48.
     z =  -2.549
     p =  0.0108
     p =  0.2003 adjusted for correlation among seasons
      (such as serial dependence)

The adjusted p-value should be used only for data with more
     than 10 annual values per season.

The relation may be described by the equation:
     Y = 246.1   +   -5.750 * Time
     where Time = Year (as a decimal) - 1993.75 (beginning
     of first water year)
```

Note: data used in this example are taken from the Vermont NMP Project, *Lake Champlain Basin agricultural watersheds section 319 national monitoring program project*, 1993 – 2001 (Meals 2001).

Helsel, D.R., D.K. Mueller, and J.R. Slack. 2005. Computer program for the Kendall family of trend tests. USGS Scientific Investigations Report 2005-5275, U.S. Geological Survey, Reston, VA. *http://pubs.usgs.gov/sir/2005/5275/*

Attachment J

Corrected Figure 5.b from 2019 Predesign Investigation

V:\Projects_Proj\Shell\St Louis\EVS\2019_PWY_LIF_Investigation\Output\Illustrator

CROSS SECTION LOCATION MAP

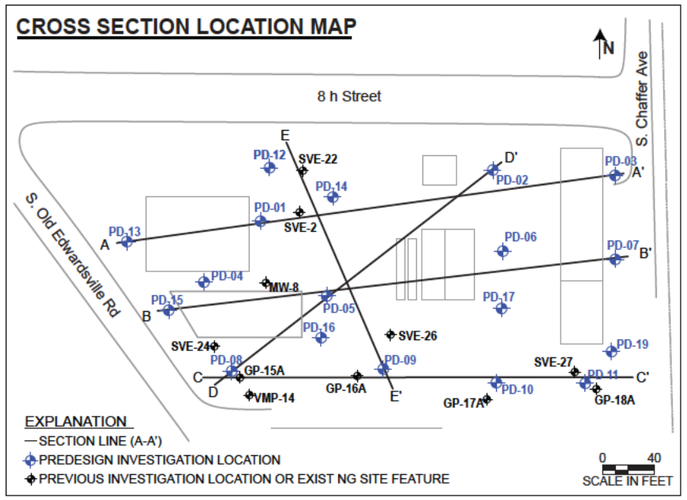

EXPLANATION

Lithology

- Sand and Silty Sand
- Sand
- Silty Sand and Sandy Silt
- Clay and Silty Clay

Benzene in Soil (mg/kg)

23,000
10,000
3,000
1,000
300
100
30
10
3
1
0.3
0.1
0.03
0.01

PID Reading (ppm)

>5,000
3,000
1,000
300
100
30
10
3
1
0.3
0.1
0.03
0.01
0.003
0.001

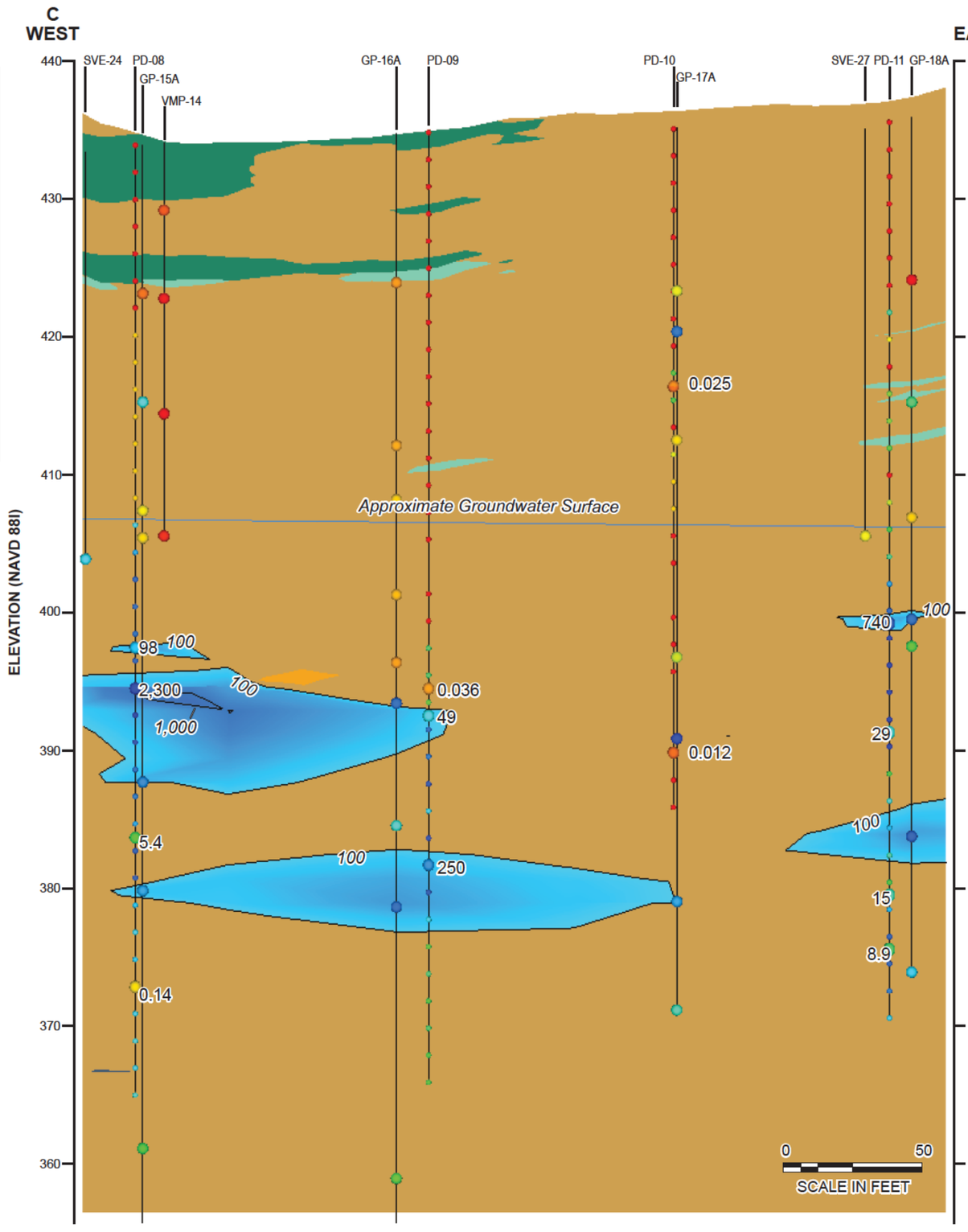

NOTES

NAVD 88	North American Vertical Datum
mg/kg	milligrams per kilogram
PID	photoionization detector
>	greater than
ppm	parts per million

1. Lithology and concentrations of benzene in soil were modeled using CTECH's Earth Volumetric Studio (EVS), version 2019.2;
2. Contour lines are in orders of magnitude, starting at 100 mg/kg.
3. Modeled lithology is based on CPT data collected at 18 locations on June 10 - June 20, 2019, except the upper 10 feet, which was based on hand auger logs.
4. Benzene in soil was modeled using EVS' Krig Statistics method. The dataset includes historical and predesign concentrations of benzene in soil at the site (larger dots represent analytical results).
5. PID data are represented by small, unlabeled dots.
6. Locations within 15 feet were projected onto the cross section line.
7. The approximate groundwater surface was modeled using gauging data from the 3Q19 Roxana Interim Groundwater Monitoring Program.

PUBLIC WORKS YARD PREDESIGN INVESTIGATION ROXANA, ILLINOIS	PROJECT NO. 60592794
AECOM	
CROSS SECTION C-C' BENZENE IN SOIL	FIG. NO. 5B

AECOM
100 N. Broadway, 20th Floor
St. Louis, MO 63102
aecom.com